UP TO

MOTOR'S TRUCK REPAIR MANUAL

1963

INDEX

TRUCK & DIESEL ENGINE SECTION

Autocar 329
Brockway 348
Chevrolet 359
Corvair 419
Cummins Diesel Engines 454
Diamond T 485
Divco 507
Dodge 520
Ford Standard Trucks 566
Ford Econoline 621
GM Diesel Engines 637
GMC Trucks 681
International Diesel Engines 755
International Standard Trucks 765
International Scout 802
Mack Diesel Engines 814
Mack Trucks 828
Perkins Diesel Engines 859
Reo 871
Studebaker 894
White Standard Trucks 915
White PDQ Trucks 934
Willys Jeeps 950

GENERAL SERVICE SECTION

Alternators & Regulators 37
Axles, Driving:
- Eaton 176
- Timken (Rockwell-Standard) 209
- Locking Differentials 169

Brake Adjustments 252
Brakes, Air 259
Brake System, Hydraulic 250
Brakes, Vacuum Booster 268
Dash Gauges 93
Differentials, Locking 169
Distributors, Standard 7
Fuel Pumps 104
Generators & Regulators 27
Ignition Distributors, Standard 7
Ignition, Transistorized:
- Delco-Remy 22
- Ford 24

L.P.G. Carburetion 109
Rear Axles:
- Eaton 176
- Timken (Rockwell-Standard) 209
- Locking Differentials 169

Starting Motors 65
Starting Switches 85
Transfer Cases 242
Transmissions, Stock:
- Clark 110
- Fuller 122
- New Process 135
- Spicer (Dana) 141
- Warner 164

Tune Up Service 2

STOCK ENGINE SPECIFICATIONS SECTION

Continental 973
Hall-Scott 975
Hercules 977
Waukesha 979

FARM TRACTOR ENGINE SPECIFICATIONS

Allis-Chalmers 982
J. I. Case 983
John Deere 984
Ford 986
International Harvester 987
Massey-Ferguson 988
Minneapolis-Moline 990
Oliver 991

AUTOMATIC TRANSMISSION SECTION

Allison 281
Cruise-O-Matic 300
Divcomatic 300
Ford-O-Matic 300
Hydra-Matic 313
Loadflite 300
Metro-Matic 300
Powermatic 281
Reomatic 281
Torqmatic 281
Transmatic 281
Warner 300

MOTOR'S TRUCK REPAIR MANUAL

16th Edition

First Printing

Editor
Ralph Ritchen

Associate Editors
Louis Forier **Wallace Norde**

FIELD STAFF

John T. Keefe, *Manager*

John T. Morehead, *Ass't Manager*
Raymond E. Plasters, *Eastern Manager*
Ben O. Kochel, *Western Manager*
Delmer D. Fisher, *Mid-West Manager*

Howard W. Adams
Abram T. Baldwin
Bruce Balkwill
William F. Baumann
William D. Brown
Frank J. Buhner
William W. Burgess
Loddie C. Calta
Brice M. Campbell
James A. Chambers
Oscar Clouse
Seldon O. Conover Jr
Keith K. Crossman
Herman Duchin
Harold P. Finley
Harold L. Fish
Howard C. Green
Al Henderson
Kenneth L. Hoover
Robert B. Hughes
O. Byron Johnson
Harland B. Jones
Mike Kantor
Carl C. Keebler
Francis J. Kelly
Louis A. King
William A. Klasen
Jack Kretsinger
Michael J. Lovullo
Herman F. Lux
Fred C. Maracci
Donald H. Mattson
Paul C. Meeks
David F. Memory
Francis A. Moran Jr
Frank A. Moran
Robert W. Motter
Robert L. Mueting
W. Thomas Mulloy
Donald B. Murray
Kenneth W. Neal
William E. Nichols
William A. Nicman
Charles M. O'Neil
Arthur E. Pelcher
William A. Rexrode
Scott A. Ritter
Robert G. Robey
William H. Sastaunik
Donald R. Schomberg
Bernard P. Shannon
Eugene E. Shannon
John D. Simonson
Francis L. Spillane
Paul P. Stevko
Donald B. Still
John B. Stoner
Thomas J. Todd, Jr.
Glenn C. Troutman
Walter L. Vermillion
Edwin F. Wade
David F. Webster
Gerald R. Wink
Donald L. Winkler
Herman Zemel

Robert W. Edwards, Midland, Ontario, Canada

Published by

MOTOR

250 West 55th St., New York 19, N. Y.

The Automotive Business Magazine

Printed in the U. S. A. Copyright 1963 by The Hearst Corporation

TUNE UP

ENGINE TUNE-UP has become increasingly important to the modern automotive engine with its vastly improved power and performance. With the higher compression ratios, improved electrical systems and other advances in design, engines have become more sensitive to usage and operating conditions, all of which have a decided effect on power and performance. It is important, therefore, that this service be performed on the engine every spring and fall or more often if conditions warrant.

Compression Test

The engine cannot be tuned to develop maximum power and smooth performance unless reasonably high and uniform compression pressure is obtained in each cylinder. The compression in each cylinder should, therefore, be tested before any other tune-up operations are performed.

1. Remove any foreign matter from around spark plugs by blowing out plug area with compressed air. Then loosen all plugs one turn.
2. Start engine and accelerate to a fast idle to blow out loosened carbon. Stop engine and remove spark plugs. *Cleaning out carbon in this manner is important in preventing false compression readings due to particles of carbon lodged under the valves.*
3. Remove air cleaner and block throttle and choke in wide open position.
4. Insert compression gauge firmly in spark plug opening and crank engine through at least four or five compression strokes to obtain highest possible reading.
5. Test and record compression of each cylinder. Compression should read within the limits given in the *Tune Up Charts* in truck chapters. The variation between highest and lowest reading should be less than 20 pounds.
6. If one or more cylinders read low, inject about a tablespoon of engine oil on top of pistons in the low reading cylinders. Crank engine several times and recheck compression.
7. If compression comes up but does not reach normal it indicates worn piston rings. If compression does not improve, valves are sticking or seating poorly. If two adjacent cylinders indicate low compression and injecting oil does not improve the condition, the cause may be a head gasket leak between the cylinders.

Cylinder Balance Test

It is sometimes difficult to locate a weak cylinder especially in an eight cylinder engine. A compression test, for example, will not locate a leaky intake manifold, a valve not opening properly due to a worn camshaft, or a defective spark plug.

With the cylinder balance test, the power output of one cylinder may be checked against another, using a set of grounding leads, Fig. 1. When the power of each cylinder is not equal, the engine will lose power and run roughly. The cylinder balance test is as follows:

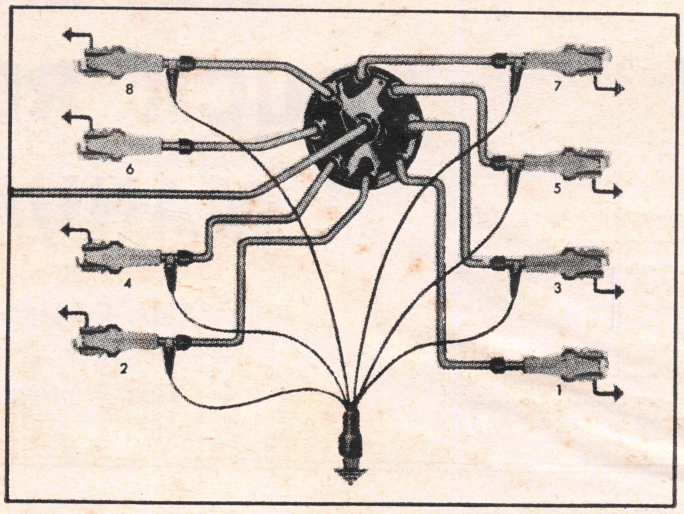

Fig. 1 Cylinder balance test connections. The firing order in this example is 1-8-4-3-6-5-7-2. Therefore, the cylinders to be tested together are 1-6, 8-5, 4-7, 3-2, using the grounding leads as shown

1. Connect a tachometer and vacuum gauge.
2. Start engine and run it at a fast idle.
3. Ground large clip of grounding leads and connect individual leads to all spark plugs *except the pair being tested* (see Fig. 1).
4. Divide the firing order in half and write down the first half over the second half. The cylinders to be tested together appear one over the other:

Firing Order	Pairs Tested
1-8-4-3-6-5-7-2	1-6, 8-5, 4-7, 3-2
1-2-7-8-4-5-6-3	1-4, 2-5, 7-6, 8-3
1-5-4-8-6-3-7-2	1-6, 5-3, 4-7, 8-2
1-5-4-2-6-3-7-8	1-6, 5-3, 4-7, 2-8
1-8-7-3-6-5-4-2	1-6, 8-5, 7-4, 3-2
1-6-5-4-3-2	1-4, 6-3, 5-2
1-5-3-6-2-4	1-6, 5-2, 3-4
1-4-5-2-3-6	1-2, 4-3, 5-6
1-3-4-2	1-4, 3-2

5. Operate engine on each pair of cylinders in turn and note engine rpm and manifold vacuum for each pair. A variation of more than one inch of vacuum or 40 rpm between pairs of cylinders being tested indicates that the cylinders are off balance.
6. To isolate one weak cylinder, short out one bank of cylinders at a time. The bank giving the lower readings will include the weak cylinder.

Spark Plugs

1. Examine firing ends of plugs for evidence of oil fouling, gas fouling, burned or overheated condition. *Oil fouling is usually identified by wet, sludgy deposits caused by excessive oil consumption. Gas fouling is identified by dry, black, fluffy deposits caused by incomplete combustion. Burned or overheated spark plugs are identified by white, burned or blistered insulator nose and badly burned electrodes. Improper fuel, insufficient cooling or improper ignition timing normally are the cause. Normal conditions are usually identified by white powdery deposits or rusty-brown to grayish-tan powdery deposits.*
2. Clean plugs with a suitable sand blast cleaner following the manufacturer's instructions.
3. Remove carbon and other deposits from threads with a stiff wire brush.
4. Dress electrodes with a small file to secure flat, parallel surfaces on both center and side electrodes, Fig. 2.
5. Use a round wire gauge to check the gap, Fig. 3, and adjust by bending the side (never center) electrode to the proper specifications as shown in the *Tune Up Charts* in truck chapters.
6. If gaskets are used, place new ones on plugs and torque them to the specifications given in the *Engine Tightening Specifications* chart in truck chapters.

Service Notes

Improper installation of spark plugs is one of the greatest single causes of unsatisfactory spark plug performance. Improper installation is the result of one or more of the following practices: 1) Installation of plugs with insufficient torque to fully seat the gasket; 2) excessive torque which changes gap settings; 3) installation of plugs on dirty gasket seal; 4) installation of plugs to corroded spark plug hole threads.

Failure to install plugs properly will cause them to operate at excessively high temperatures and result in reduced operating life under mild operation or complete destruction under severe operation where the intense heat cannot be dissipated rapidly enough.

Always remove carbon deposits in hole threads before installing plugs. When corrosion is present in threads, normal torque is not sufficient to compress the plug gasket (if used) and early failure from overheating will result.

Always use a new gasket (if required)

and wipe seats in head clean. The gasket must be fully compressed on clean seats to complete heat transfer and provide a gas tight seal in the cylinder. For this reason as well as the necessity of maintaining correct plug gap, the use of correct torque is extremely important during installation.

Ignition System Service

1. Replace brittle or damaged spark plug wires. Install all wires to proper spark plug. The *Tune Up Charts* in truck chapters give firing orders should wires become mixed.
2. Tighten all ignition system connections.
3. Replace or repair any wires that are frayed, loose or damaged, Fig. 4.
4. Remove distributor cap, clean and inspect for cracks, carbon tracks and burned or corroded terminals. Replace cap if necessary.
5. Clean rotor and inspect for damage or deterioration. Replace rotor if necessary.
6. Check distributor centrifugal advance mechanism (if used) by turning distributor rotor in direction of running rotation as far as possible, then release rotor to see if springs return it to its retarded position. If rotor does not return readily, the distributor must be disassembled and cause of trouble corrected.
7. Check to see that the vacuum spark control operates freely by turning the movable breaker plate (if used) or distributor housing in a direction opposite to that of running rotation to see if the spring returns it to the retarded position. Any stiffness in the operation of the spark control will affect ignition timing. Correct any interference or binding condition noted.
8. Examine distributor points and clean or replace if necessary. Points with an overall gray color and only slight roughness or pitting need not be replaced.
9. Dirty points should be cleaned with a clean point file. Use only a few strokes of the file. The file should not be used on other metals and should not be allowed to become dirty or greasy. *Never use emery cloth or sandpaper to clean points since particles will embed and cause arcing and rapid burning of points.* Do not attempt to remove all roughness nor dress the point surfaces down smooth. Merely remove scale or dirt.
10. Replace points that are badly burned or pitted. Where burned or badly pitted points are encountered, the ignition system and engine should be checked to determine the cause of the trouble so it can be eliminated. Unless the condition causing point burning is corrected, new points will provide no better service than the old points. See *Ignition* chapter for an analysis of point burning or pitting, and for proper installation of points.

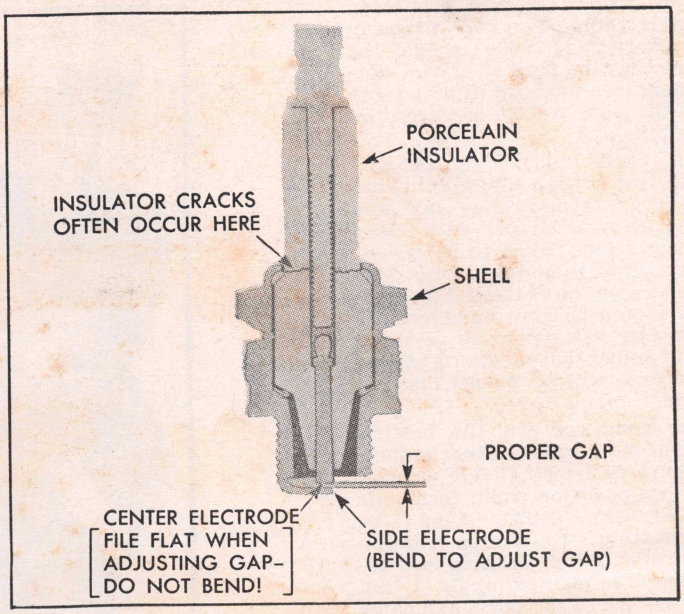

Fig. 2 Spark plug details

Battery & Cables

Inspect for signs of corrosion on battery, cables and surrounding area, loose or broken carriers, cracked or bulged cases, dirt and acid, electrolyte leakage and low electrolyte level. Fill cells to proper level with distilled water or water passed through a "demineralizer".

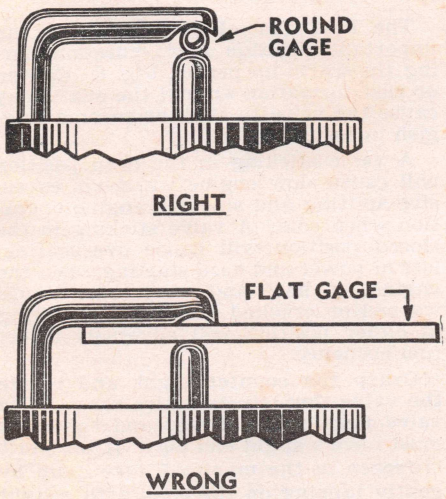

Fig. 3 Correct and incorrect spark plug gauges

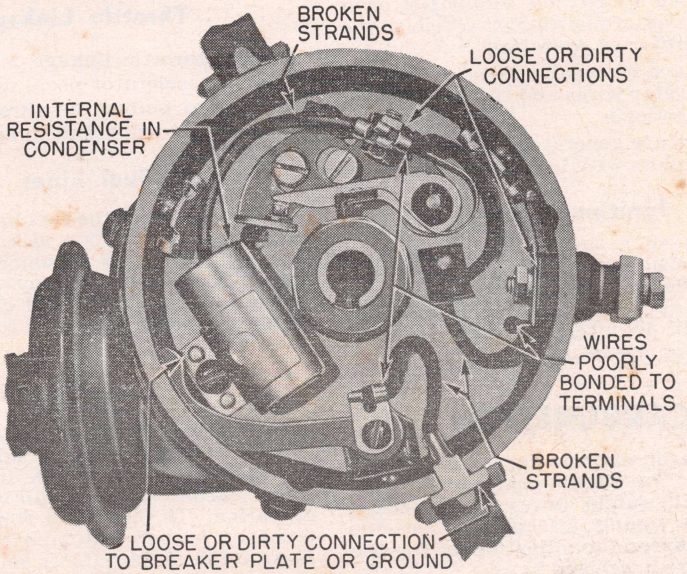

Fig. 4 What to look for when checking for high resistance in the primary circuit of distributor. In addition to the points indicated, look for external circuit high resistance at ignition switch terminals, ammeter terminals, coil terminals and broken or poorly insulated wires in this circuit

The top of the battery should be clean and the battery hold-down bolts properly tightened. Particular care should be taken to see that the tops of 12-volt batteries are kept clean of acid film and dirt because of the high voltage between the battery terminals.

For best results when cleaning batteries, wash first with a dilute ammonia or soda solution to neutralize any acid present and then flush off with clean water. Care must be taken to keep vent plugs tight so that the neutralizing solution does not enter the battery. The hold-down bolts should be kept tight enough to prevent the battery from shaking around in its holder, but not so tight that the battery case will be placed under a severe strain.

To insure good contact, the battery cables should be tight on the battery posts. Oil battery terminal felt washer. If the battery posts or cable terminals are corroded, the cables should be cleaned separately with a soda solution and a wire brush. After cleaning and before installing the clamps, apply a thin coating of vaseline to the posts and cable clamps to help retard corrosion.

If the battery has remained undercharged, check for a loose generator belt, defective generator, high resistance in charging circuit, oxidized voltage regulator contact points, or a low voltage setting.

If the battery has been using too much water, the voltage regulator setting is too high.

Fan Belt & Generator

1. Inspect fan belt condition and check adjustment.
2. Inspect generator commutator and brushes for cleanliness or wear. The commutator should be cleaned if dirty and brushes should be replaced if worn down to less than half their original length. *The commutator may be cleaned by holding a strip of No. 00 sandpaper or a cleaning stone against it while the generator is operating.*
3. Replace or repair frayed or broken generator wires and tighten all wire connections.
4. Lubricate generator by filling hinge cap oilers with light engine oil.

Ignition Timing

The use of a timing light, Fig. 5, is recommended for checking and setting ignition timing. Timing that is set back as much as six degrees from the best setting will definitely decrease acceleration and top speed performance.

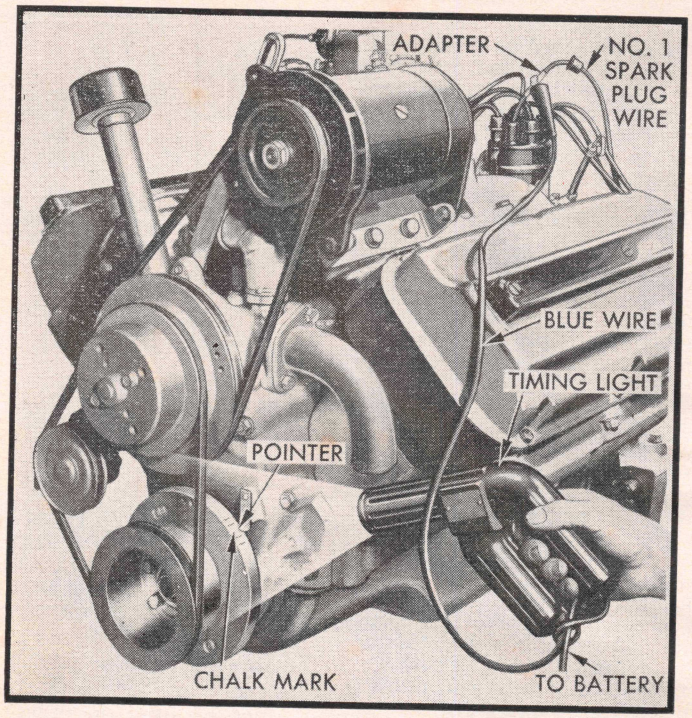

Fig. 5 Checking ignition timing with timing light

CARBURETION

Since carburetion is dependent in several ways on both compression and ignition, it should always be checked last when tuning an engine. See the vehicle chapter for adjustments for the unit you are interested in.

Before adjusting the carburetor, consider the factors outlined below and which definitely affect engine performance.

Carburetor Flange

Check the flange for looseness on the manifold. If one of the flange nuts is loose as little as one-half turn, a sufficient amount of air will enter the intake manifold below the throttle plate to destroy engine idle and all engine performance.

If a tight fit cannot be obtained by tightening the nuts, install a new gasket but be sure that all the old gasket material has been removed.

Throttle Linkage

If the throttle linkage is adjusted so that the accelerator pedal will strike the floor board before the throttle plate is wide open, it will result in low top speed.

Fuel Lines

A restriction of the fuel line will result in an apparent vapor lock action or a definite cut-off of gasoline. This can generally be corrected by blowing out the line with compressed air. In some cases, it may be necessary to replace the line.

Fuel Pump

The pump should be tested to make sure that it will draw an adequate supply of fuel from the tank and deliver it to the carburetor under all conditions of operation. If the pump functions inefficiently, proper adjustment and operation of the carburetor is impossible because the fuel will not be maintained at the prescribed level in the idle passages and main discharge jet (or jets) of the carburetor under all operating conditions.

Fuel Tank

The fuel tank should not be overlooked as a possible source of trouble with carburetion. A shortage of fuel at the fuel pump or carburetor may be caused by pieces of filling station pump hose or other material obstructing the mouth of the feed pipe in the tank, or by a restriction of the air vents in the filler cap and neck.

An unusual amount of dirt, water or gum in the fuel filter indicates that the tank is contaminated with these substances, which should be cleaned out to prevent future failure of the pump or carburetor.

Heat Control Valve

The heat control valve performs an important function in carburetion during the warm-up period, Fig. 6. Carbon or rust formation around the shaft may cause the valve to stick or become sluggish in operation.

A valve sticking in the open position will cause slow engine warm-up, excessive spitting and sluggish engine operation when cold. A valve sticking in the closed position will cause overheating, loss of power and hard starting when the engine is hot, and may also cause warped or cracked manifolds. Sticking in either position will adversely affect fuel economy.

Grasp the counterweight and rotate the valve through its entire range. The valve must rotate freely and the shaft must have a slight end play. If the shaft is frozen in the manifold, free it up by gently tapping on the ends with a light hammer, and by rotating the counterweight at the same time.

Lubricate the shaft with a thin mixture of powdered graphite and alcohol or kerosene while moving the counterweight back and forth to work the lubricant into the bearings. Do not use oil as this will form carbon and cause sticking of the valve.

Inspect the thermostat and the anti-rattle spring to make sure they are properly assembled.

Intake Manifold Leaks

Leakage of air into the intake manifold at any point will affect carburetion and general engine performance. Air may leak into the manifold through the joints at the carburetor or cylinder head, cracks in the manifold, cracks or poor connections in the windshield wiper or windshield washer hose lines, or the connections of any accessories which may be connected to the manifold. All such joints should be tested for leaks.

To test the intake manifold for leaks, apply oil from an oil can along the gasket joints with the engine idling. An air leak is indicated when oil is drawn past the gaskets by the suction of the engine. Tighten the nuts or cap screws holding the manifold to the engine and retest for leaks. If tightening fails to stop the leaks, replace the manifold gaskets. If the new gaskets fail to stop the leaks, carefully inspect the manifold for cracks and test any suspicious area with oil.

Air Cleaner

An air cleaner with a dirty element, or with oil that is dirty, too heavy, or too high in the sump, will restrict the air flow through the carburetor and cause a rich mixture at high speeds. In such a condition the air cleaner likewise will not properly remove dirt from the air, and the dirt entering the engine will cause rapid formation of carbon, sticking valves, and wear of piston rings and cylinder bores.

Automatic Choke

The choke mechanism must be inspected and cleaned to make sure it is operating freely. Sluggish action or sticking of the choke will cause excessive fuel consumption, poor performance during warm-up and possibly hard starting.

The choke thermostat should be set in accordance with the average air temperature as well as the volatility of the fuel being used. It is desirable to have the thermostat set as lean as operating conditions permit in order to avoid an over-rich mixture during engine warm-up.

PERFORMANCE TEST

After an engine has been tuned up, the truck should be given a thorough and systematic road test to make certain that engine power and performance are up to standard under all operating conditions. The gasoline used in making the test must be of good quality and proper octane rating in order to obtain the performance described in the following tests.

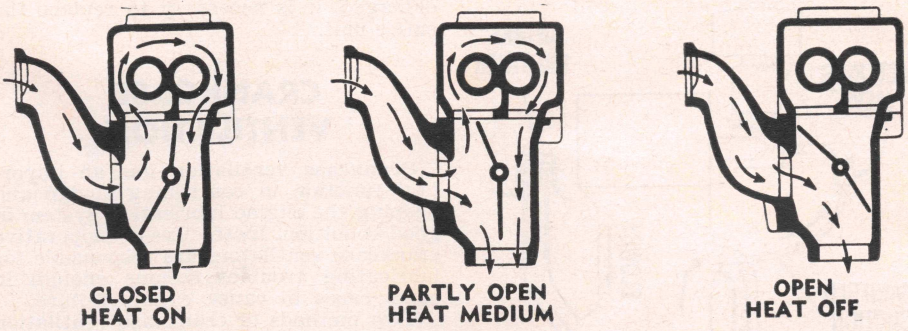

Fig. 6 Operation of a typical manifold heat control valve

Engine Warm Up

On vehicles with automatic chokes, a cold engine should operate on fast idle for two to five minutes, depending upon air temperature.

At 32 deg. F. the fast idle cam should move to the slow idle position in approximately ½ to ¾ mile of driving. At higher temperatures, it should move to the slow idle position in a correspondingly shorter distance.

If the engine loads excessively or runs rich on warm up due to a rich choke setting, excessive fuel consumption, carbon formation, and spark plug fouling will result.

An engine which is adjusted for smooth idling in cold outside temperature will not idle smoothly for any length of time in a warm building, since the required carburetor adjustment will cause richness of mixture in the warmer atmosphere.

Gradual Acceleration Test

Starting at idling speed in high gear, gradually open the throttle to increase smoothly the speed of the truck through the entire range. Note any roughness, flat spots, or surging in engine performance during acceleration, and the speed at which the unusual condition occurs.

Roughness or poor performance at speeds below 20 m.p.h. indicates improper carburetor idle adjustment, restriction in idle passages in carburetor, tight valve lash or sticking valves, or faulty ignition.

Faulty ignition usually causes a more pronounced roughness than imperfect compression or carburetion.

Roughness or poor performance at speeds above 20 m.p.h. indicates restriction or improper settings in the high speed circuit of the carburetor, or faulty ignition.

Wide Open Throttle Acceleration Test

With the truck running at idling speed in high gear, quickly press the accelerator pedal to the floor and hold it there, meanwhile noting the performance of the engine as the vehicle is accelerated. Repeat the acceleration test, starting at different constant speeds throughout speed range of the vehicle. The truck should accelerate smoothly without hesitation, spitting, or loading of the engine.

A hesitation, spitting, or a flat spot indicates that the accelerating pump is not discharging sufficient gasoline into the engine. Sluggishness or loading indicates that the accelerating pump is adjusted too rich.

Constant Speed Test

Hold the truck speed constant at various points through the speed range and note engine performance. The engine should operate smoothly without hesitation or surging under load at all constant speeds.

At some point between 15 and 22 m.p.h. with the truck rolling along on a level road or slight upgrade, a slight leanness, surging or missing may be detected. Depressing or releasing the accelerator pedal slightly will eliminate this condition and no attempt should be made to correct it by altering carburetion or ignition. This condition seldom appears in the normal operation of the vehicle.

Spark Knock

Light detonation or spark knock will occur when operating with part throttle on a hard pull, even though the ignition is properly timed and Ethyl or other high octane fuel is used. Light detonation also will occur when accelerating with fully opened throttle on a hard pull. These operating conditions are normal and no attempt should be made to eliminate light detonation by retarding the ignition timing.

If regular or low octane fuel is used, detonation will probably be excessive with the standard ignition timing, and it may be necessary to retard the timing, which will reduce fuel economy and over-all performance.

Extreme heavy detonation is injurious to any engine. A truck driven continuously under conditions and fuels which produce heavy detonation will overheat and lose power, with the possibility of damage to pistons and bearings.

Valve Noise

With the valves adjusted uniformly to specifications, the noise level should be very low as observed in the vehicle while driving. The sound of valve action should be audible, however, when the hood is raised or when the engine is operating on fast idle during warm up.

The valve lash should not be reduced below specifications in an attempt to eliminate valve noise, as this will cause premature valve failure and rough engine performance, especially at idle.

Sticking valves usually are indicated

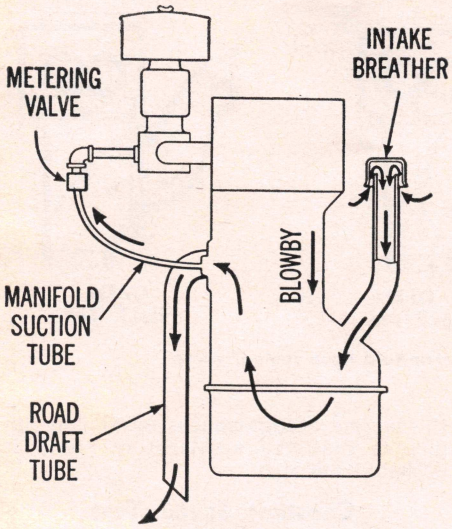

Fig. 7 Schematic drawing showing how either the road draft or manifold suction systems of crankcase ventilation operate

by an intermittent loudness of action, although the valves will be unusually noisy at all times if they are sticking badly. Sticking valves will cause irregular operation or missing on a low speed pull.

Noisy Hydraulic Lifters

The easiest method of locating a noisy valve lifter is by the use of a piece of garden hose about 4 feet in length. Place the end of the hose near the end of each intake and exhaust valve with the other end of the hose near the ear. In this manner, the sound is localized, making it easy to tell which lifter is at fault.

Another method is to place a finger on the face of the valve spring retainer. If the lifter is not functioning properly, a distinct shock will be felt when the valve returns to its seat.

In most cases where noise exists in one or more lifters, all lifter units should be removed and cleaned. If dirt, varnish, carbon, etc., is found to exist in one unit, it more than likely exists in all the units.

Plungers are not interchangeable as they are selectively fitted at the factory. Should a plunger or lifter body become damaged, it is necessary to replace the entire unit.

CRANKCASE VENTILATION

Crankcase ventilation has an important function in controlling sludge and keeping the engine lubricating system in good condition. Ineffective or inoperative crankcase ventilators are responsible for lubricating troubles serious enough in some cases to cause engine failure.

Two methods of crankcase ventilation are in use, the road-draft system and manifold vacuum system, both shown schematically in the same drawing in Fig. 7.

Fig. 8 shows a typical road draft type. As indicated by the direction of the arrows, air is driven into the crankcase by fan draft through a copper gauze filter in the oil filler cap. It then circulates around the inside of the engine and is discharged through the ventilator outlet pipe, carrying with it the water vapor which collects in the crankcase, particularly in cold weather. Whenever the oiling system is cleaned, the filler and outlet pipes should be removed and flushed out thoroughly. The gauze filters should also be washed in clean gasoline or kerosene.

In order to control smog, the manifold vacuum system of crankcase ventilation is standard equipment on 1961-62 cars to be used in California and is mandatory on all cars starting with 1963 models. The correct operation of this system depends upon a free flow of air from the carburetor air cleaner through the oil filler tube and engine to the control valve mounted on the intake manifold, Fig. 7. The arrows indicate the direction of the flow of air.

The system sucks crankcase vapors into the intake manifold to be burned in the combustion chamber. The flow of the vapors is controlled by the ventilator valve. The valve is actuated by engine vacuum working against spring tension. The high vacuum at engine idle provides minimum ventilation; low vacuum at road speeds provides maximum vacuum.

Servicing the system consists of checking the valve, the tubing and the air intake. The valve should be removed and checked for proper operation and for harmful deposits. If necessary, disassemble the valve, clean the parts in solvent and dry with compressed air. Inspect each component carefully. If the spring is distorted or the valve is worn the valve should be replaced. When reassembling the valve, make sure the end coil of the spring is snapped into the groove which is usually just under the head of the valve.

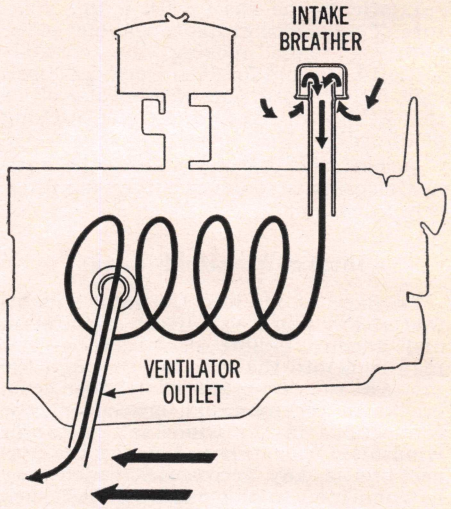

Fig. 8 Road draft system of crankcase ventilation

Remove the tubing and blow out any deposits with compressed air. When reinstalling the valve and tubing, make sure all connections are tight to prevent air leaks.

On some engines, the system air intake is a hose from the air cleaner to the oil filler tube. Make sure the hose is in good condition, and all connections are air tight. Check the oil filler tube cap to be sure it makes an air tight seal on the tube. Air leaks can easily be checked for by squirting kerosene at the connections.

On other engines, the system air intake is a filter type oil filler tube cap. Check the cap filter to be sure it is free of dirt. Clean it in solvent if necessary.

If the control valve becomes clogged with carbon or other foreign matter the ventilation system will not operate and a slight pressure will build up in the crankcase which may cause oil leakage at the rear main bearing or by the piston rings. And should the valve fail to seat it will be impossible to make the engine idle satisfactorily.

IGNITION DISTRIBUTORS

THE ignition system can be divided as follows, Fig 1.

1. Battery to supply current.
2. Ignition wiring to carry current to the units in the system.
3. Ignition switch to control the circuit.
4. Ignition coil to increase the voltage delivered to the spark plugs.
5. A distributor to distribute current to each cylinder.
6. Spark plugs to ignite the fuel in each cylinder.

But inasmuch as the "Tune Up" chapter deals with such service as comes within the province of tuning up an engine—such as batteries, spark plugs, etc.—this chapter will discuss the functions and service requirements of the distributor itself, together with any additional data not included in the "Tune Up" chapter.

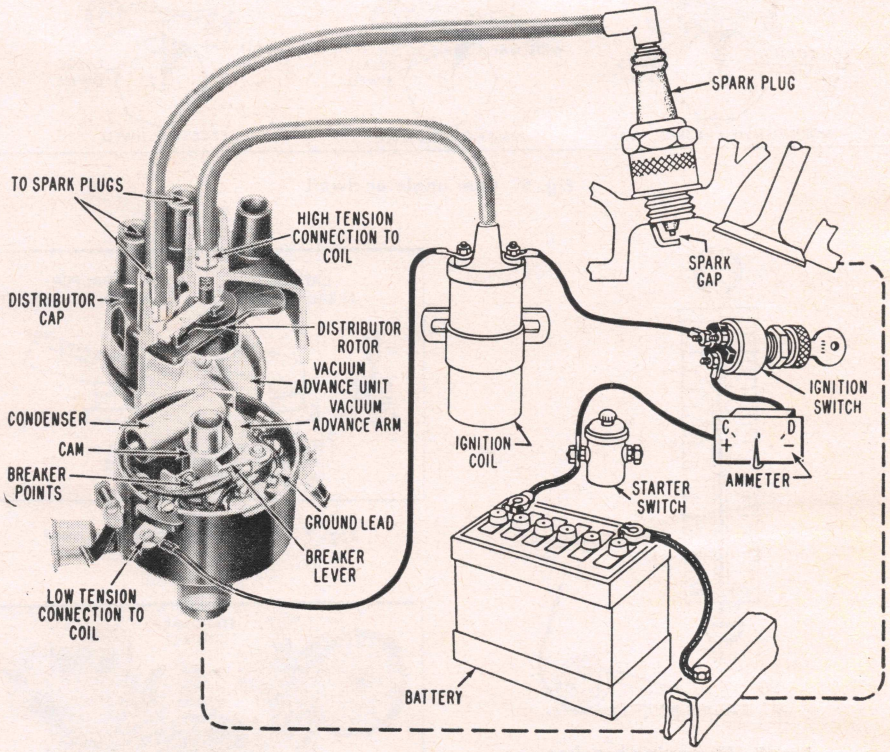

Fig. 1 Typical ignition system

BREAKER CONTACT POINTS

Contact Analysis

The normal color of points should be a light gray. If the contact surfaces are black it is usually caused by oil vapor or grease from the cam. If they are blue, the cause is usually excessive heating due to improper alignment, high resistance or open condenser circuit.

If the contacts develop a crater or depression on one point and a high spot of metal on the other, the cause is an electrolytic action transferring metal from one contact to the other, Fig. 2. This can be the result of some unusual operation of the vehicle. A slow-speed driver in city traffic or door-to-door delivery vehicles will be one extreme, and high-speed, long distance driving would be the other extreme. It may also be due to an unbalanced ignition system, which can sometimes be improved by a slight change in condenser capacity. If the mound is on the positive point, Fig. 3, install a condenser of greater capacity; if on the negative point, Fig. 4, use a condenser of lesser capacity.

One of the most common causes of point failure is the presence of oil or grease on the contact surfaces, usually from over-lubrication of the wick at the top of the cam or too much grease on the rubbing block of the breaker arm.

Breaker Point Gap

Correct contact point opening is important, especially during starting and low speed operation. If points are set too close, arcing and burning will occur, causing hard starting and poor low speed performance. If points are set too wide, the cam angle or dwell will be too small to allow saturation of the coil at high engine speeds, resulting in weak spark.

Contact point opening has a direct bearing on cam angle or dwell which is the number of degrees that the breaker cam rotates from the time the points close until they open again, Fig. 5. The cam angle or dwell increases as point opening is decreased and vice versa. In view of the importance of point opening to low speed engine performance and cam dwell to high speed engine performance, the cam angle or dwell should be checked after adjusting and aligning points. This is done on a distributor testing machine, following the manufacturers instructions.

Breaker Arm Spring Tension

Breaker arm spring tension is important. If the tension is too great the arm will bounce, causing an interruption of the current in the coil and misfiring. If the spring tension is too little, the rubbing block will not follow the cam, causing a variation in cam dwell. The spring tension should always be set at the high

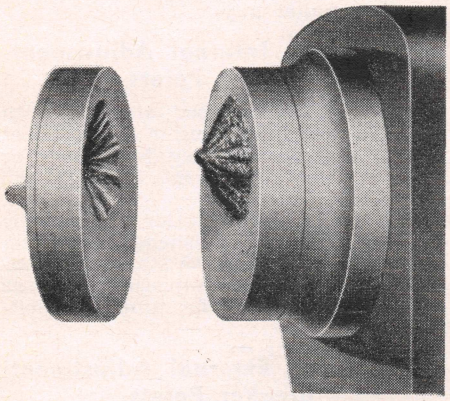

Fig. 2 Showing how metal from one contact transfers to the other

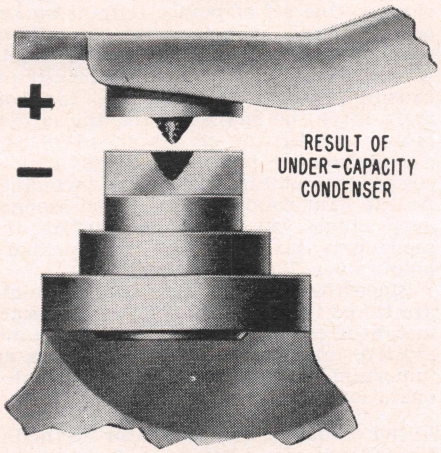

Fig. 3 Mound on positive point

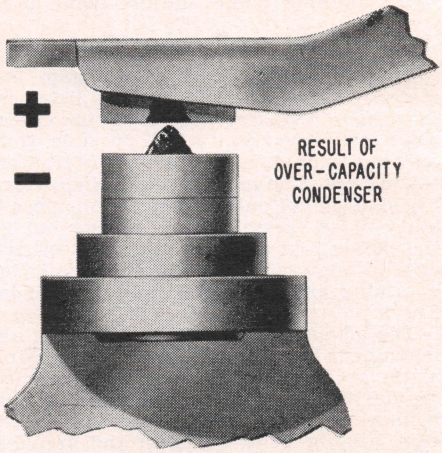

Fig. 4 Mound on negative point

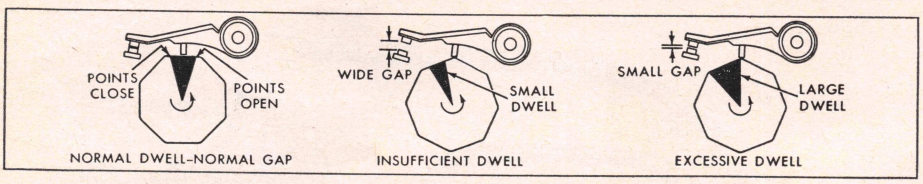

Fig. 5 Cam angle or dwell

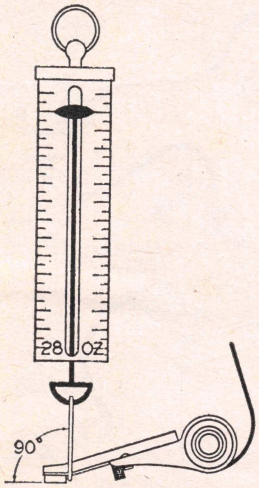

Fig. 6 Measuring breaker arm spring tension

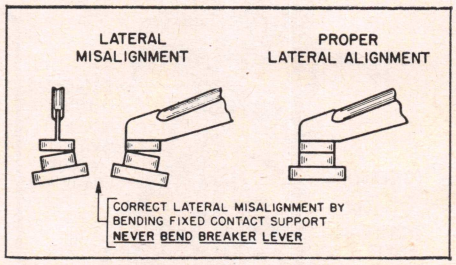

Fig. 7 Breaker point alignment

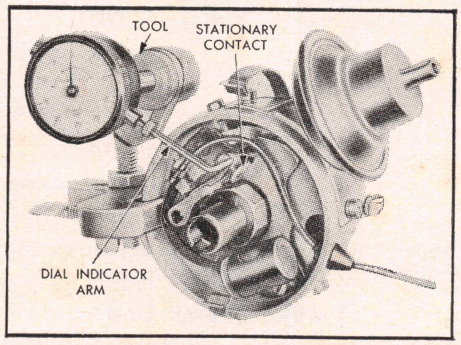

Fig. 8 Dial indicator for measuring breaker gap

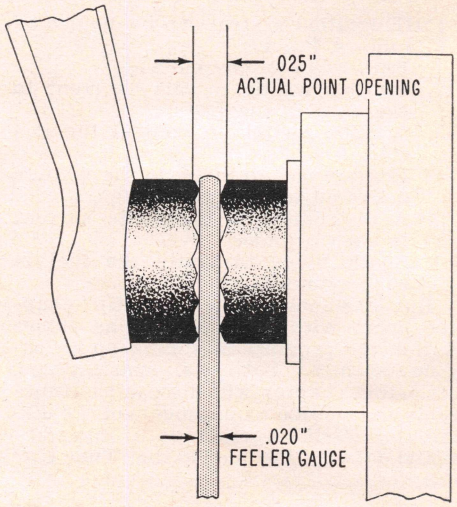

Fig. 9 Why flat feeler gauge will not provide accurate point spacing if points are rough

limit as given in the *Distributor Specifications* chart in truck chapter, as it will be reduced as the rubbing block wears.

Hook a spring scale on the breaker arm and pull in a straight line as shown in Fig. 6. Take a reading as the points start to separate under the slow and steady pull of the scale. If the tension is not within specification, loosen the screw that holds the end of the point spring and slide the end of the spring in or out as necessary. Tighten the screw and recheck the spring tension.

Breaker Point Alignment

Check alignment of points with points closed, Fig. 7. Align new points where necessary but do not attempt to align used points. Instead, replace used points where serious misalignment is observed. After aligning points, adjust point gap.

Adjusting Breaker Gap

Specifications for breaker gap, *as measured with a wire gauge,* is listed in the *Tune Up Specifications* in truck chapters. However, if at all possible, this opening should be set on a distributor testing machine or with a dial indicator, Fig. 8. This not only eliminates the possibility of an incorrect gap setting but if the points are slightly rough but otherwise in alignment, there is the danger of obtaining an incorrect gap, as shown in Fig. 9.

The advantage of a distributor testing machine is that it not only measures cam angle or dwell but it also uncovers irregularities between cam lobes, point bounce, alignment of rubbing block with cam, alignment of contacts and breaker arm spring tension.

Setting Auto-Lite Dual Points

The distributor used on some Chrysler Corp. cars contain two sets of points which permit additional current build-up in the primary winding of the coil, Fig. 10. Thus, maximum voltage is induced in the secondary winding.

The two sets of points are connected in parallel and are positioned in relation to the 8-lobe cam so as to provide a 7-degree overlap of points opening and closing. One set of points (circuit *maker* points) closes the primary circuit in the coil and the second set of points (circuit *breaker* points) opens the circuit, causing a spark at the plug. Immediately after the spark occurs, the circuit *maker* points are closed ahead of the circuit *breaker* points, thus providing a circuit to build-up the primary winding. As the cam rotates further, the secondary points close and just before the secondary points open, the primary points open 7 degrees ahead.

Since the "make" and "break" points are timed to close and open at the exact instant necessary for efficient engine operation, adjustment of the points is an important factor in correct distributor operation.

Feeler Gauge or Dial Indicator Method—Rotate the distributor shaft until the breaker arm rubbing block of one set of points is on the high spot of the cam. Then, with a screwdriver blade in the triangular opening, close or open the points to the proper clearance by turning the screwdriver blade against the stationary point plate. Check the clearance with a clean wire gauge or dial indicator. Then turn the distributor shaft until the rubbing block of the second set of points is on the high spot of the cam and adjust the second set of points in the same manner

Dwell Meter Method—If this method is used *block one set of points open* with a piece of wrapping paper or calling card. Then adjust the other set of points to the correct dwell angle. Now block open the first set of points and adjust the second set. After both sets of points have been adjusted, allow them to operate together while checking that their total dwell angle measures up to manufacturer's specifications.

Auto-Lite & Chrysler Single Point Set Adjustment

Adjustment of breaker gap is accomplished by loosening the lock screw in the stationary point and moving the adjusting screw as required to obtain the correct breaker gap.

Delco-Remy Internal Adjustment Breaker Points

For distributors used starting with 1962 Corvair, an opening in the point set assembly allows for easy dwell angle or breaker point adjustment, Figs. 11 and 12.

For the early type, prior to 1956, the adjustment is accomplished by loosening the lock screw from the stationary contact and moving the adjusting screw as required to obtain the proper adjustment.

Delco-Remy External Adjustment Breaker Points

With engine running at idle speed, the

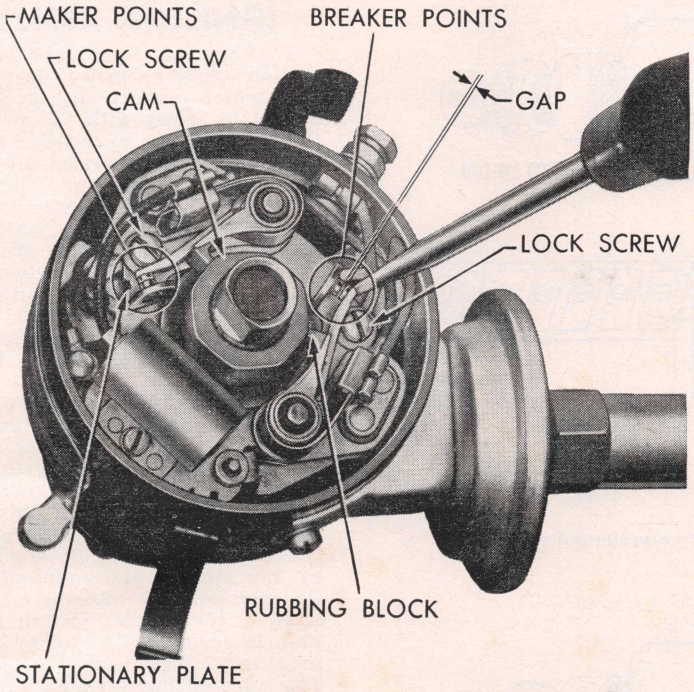

Fig. 10 Auto-Lite dual point distributor

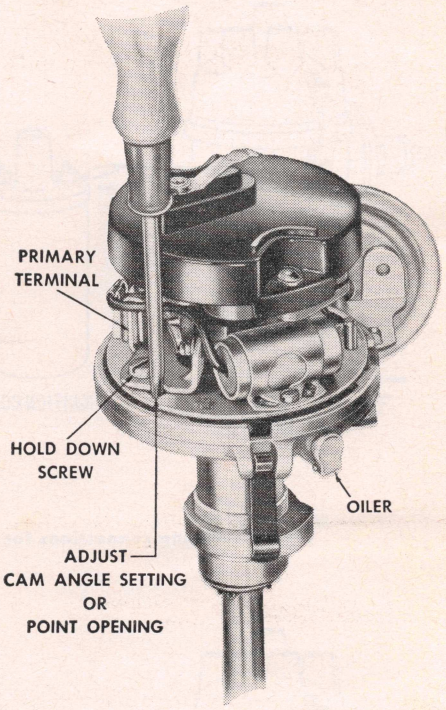

Fig. 11 Adjusting breaker gap or cam dwell on Corvair 1960-61 distributor

breaker gap is adjusted by first raising the window provided in the cap and inserting a "hex" wrench into the adjusting screw, Fig. 13. Turn the adjusting screw clockwise until the engine begins to misfire. Then give the wrench one-half turn in the opposite direction which will provide the proper breaker gap. If a cam angle meter is to be used, turn the adjusting screw until the correct angle is obtained.

Holley Breaker Points

The breaker point set is attached to the movable breaker plate. A slot in the stationary point bracket allows for easy breaker point adjustment, Fig. 14.

CONDENSER

A condenser should not be condemned because the points are burned or oxidized. Oil vapor, or grease from the cam, or high resistance may be the cause of such a condition.

Condensers should be tested with a good condenser tester for leakage, breakdown, capacity, and resistance in series in the condenser circuit. Manufacturers of condenser testers furnish complete instructions as to their use.

IGNITION COIL

If poor ignition performance is obtained and the coil is suspected, it may be tested on the car or it may be removed for the test.

Ignition coils are often condemned when the trouble is actually in the ignition switch. A completely defective ignition switch will produce an open primary circuit, giving the same indications as if the coil were completely dead. A partly defective ignition switch will cause a weak spark. Both of these conditions are often blamed on the coil.

By cutting the ignition switch out of the circuit, it can easily be determined whether or not the coil is defective or whether fault lies with ignition switch.

In the absence of any testing equipment a simple check of an ignition coil can be made as follows: Turn on ignition switch with breaker points closed. Remove the high tension cable from the center socket of the distributor cap and hold it ¼ to ⅜" away from a clean spot on the engine. Then open and close the points with a screwdriver. If the coil and other units connected to it are in good condition a spark should jump from the wire to the engine. If not, use a

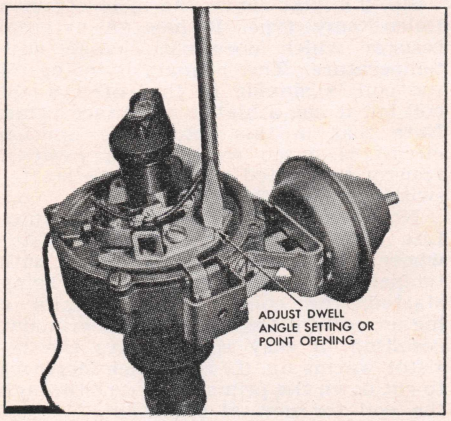

Fig. 12 Breaker point setting. 1962-63 Corvair

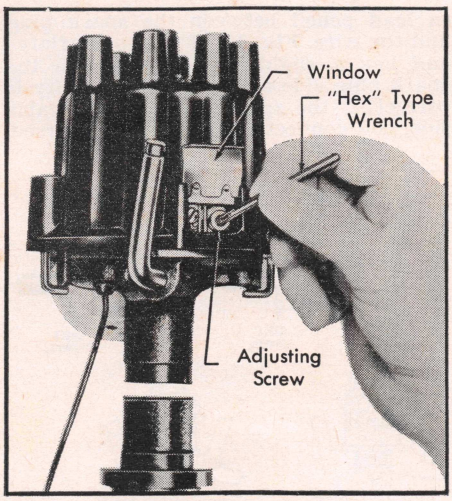

Fig. 13 Adjusting breaker point gap through window in distributor cap

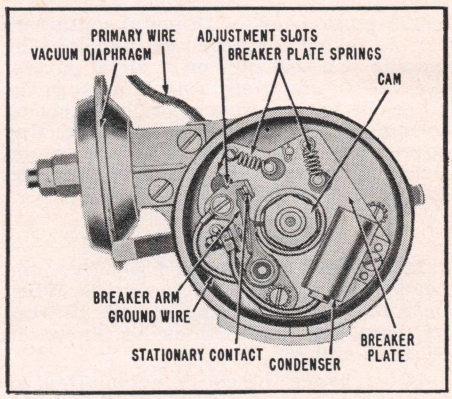

Fig. 14 Breaker plate details. Holley Loadamatic distributor. Note slot for adjusting breaker gap

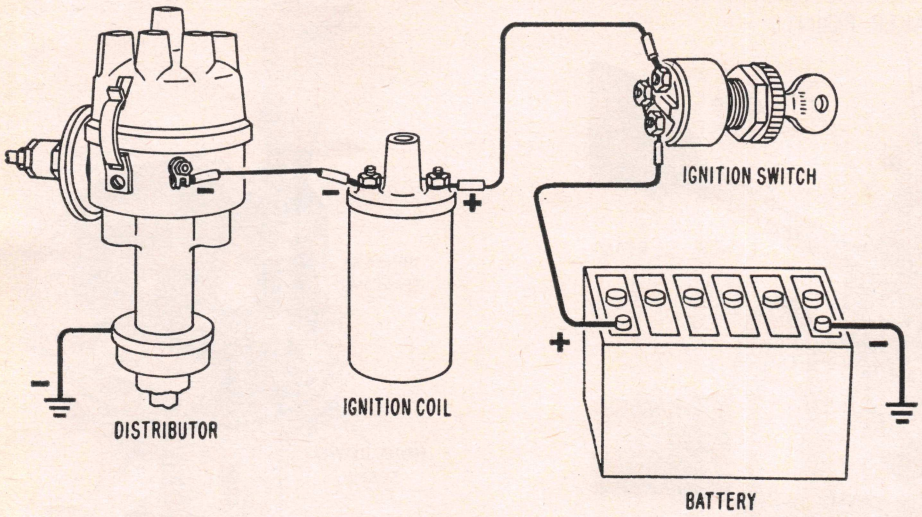

Fig. 15 Wiring connections for coil with negative grounded system

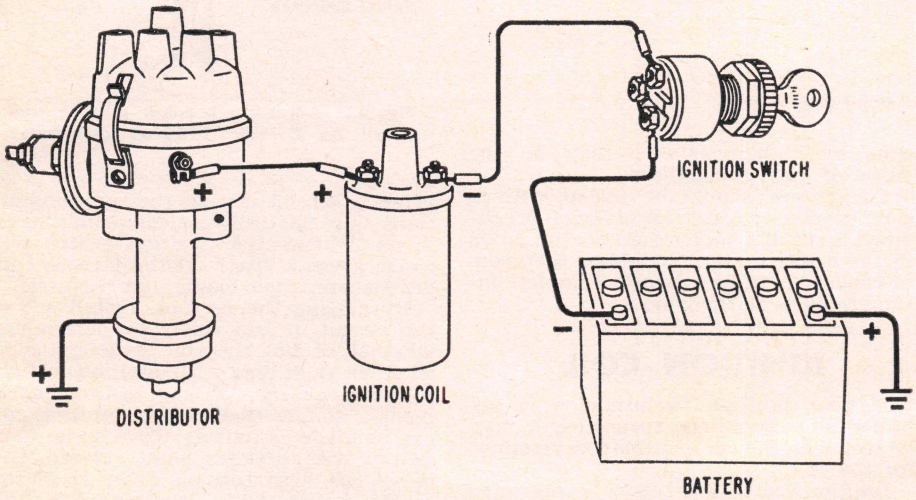

Fig. 16 Wiring connections for coil with positive grounded system

jumper wire from the primary terminal of the distributor to the engine; if the primary is in good condition a spark will occur.

All ignition coils with metal containers can be tested for grounded windings by placing one test clip on a clean part of the metal container and touching the other clip to the primary and high tension terminals. If the lamp lights or tiny sparks appear at the points of contact, the windings are grounded and the coil should be replaced.

Coil Polarity

Most coils are marked positive and negative at the primary terminals. When installing or connecting a coil, be sure to make the connections as shown in Figs. 15 and 16.

If perchance the coil is not marked as to its polarity, it can be checked by holding any high tension wire about ¼" away from its spark plug terminal with the engine running. Insert the point of a wooden lead pencil between the spark plug and the wire, Fig. 17. If the spark flares and has a slight orange tinge on the spark plug side of the pencil, polarity is correct. If the spark flares on the cable side, coil connections should be reversed.

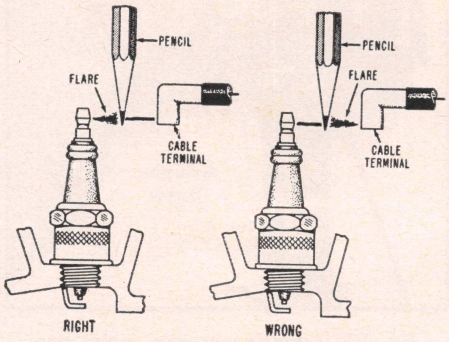

Fig. 17 Checking coil polarity

IGNITION RESISTORS

The ignition coils used with 12-volt systems are specially designed *6-volt coils* which operate with a resistor connected in series with the primary ignition circuit. The purpose of the resistor is to prolong the service life of the distributor breaker points.

In the Auto-Lite system the resistor consists of an ordinary resistance wire that is sensitive to temperature. It has a lower resistance value when cold than when hot. When the ignition is first turned on, more current will flow through the primary windings of the coil for a very short time until the resistor heats up.

In the Delco-Remy and Ford systems, the resistor is of the constant temperature type; that is, it is not affected by temperature and its resistance is approximately the same when cold and when hot. However, in this system a feature is employed which shorts out the resistor while the engine is being cranked by the starter and automatically puts the resistor back into the coil circuit as soon as the starter switch is released. This is accomplished by by-passing the resistor through the starter solenoid. The solenoid has an additional terminal from which a wire runs directly to the coil. The resistor is by-passed by means of a "finger" inside the switch housing which is attached to the additional switch terminal.

Under no circumstances should a 12-volt system be operated with the resistor shorted out as the breaker points will burn up in short order. What happens is that 12 volts will be placed across the 6-volt coil and this will double the normal current through the breaker points.

Unlike the methods illustrated in Fig. 18, the resistance used on some vehicles starting in 1960 consists of a high resistance wire incorporated in the instrument panel wiring harness. The wire used with the Delco-Remy systems is stainless steel, plastic coated and covered with a glass braid. A similar wire is used on Ford vehicles.

The four 12-volt coil and resistor setups in use are shown in the wiring diagrams, Fig. 18.

No. 1 circuit shows a 12-volt coil without any resistor in the primary circuit. The primary winding, however, has a high resistance value.

No. 2 circuit shows the most common Delco-Remy type. It has an external resistor which does not change with temperature. The primary winding of the coil is similar to that of a 6-volt coil but it has a higher resistance value. Note that in this set-up the ignition circuit is wired so that the external resistor is shorted out while the starter switch is operating.

No. 3 circuit is the most common Auto-Lite type. It uses an external resistor whose resistance value changes with temperature. When the car is being started, the cold resistor permits a higher current through the coil primary, resulting in easy starting. As the resistor warms up, its resistance increases to cut down the primary current through the coil for normal operation.

No. 4 circuit shows an Auto-Lite coil with the resistor incorporated within the coil housing.

CENTRIFUGAL ADVANCE

Except for Holley "full vacuum" distributors, all other distributors utilize an automatic advance mechanism which functions by virtue of centrifugal weights. Some distributors employ both centrifugal and vacuum advance mechanisms, while others make use of only the centrifugal mechanism.

When engine speed increases, the spark must be introduced in the cylinder earlier in the cycle in order that the fuel charge can be ignited and will have time to burn and deliver its power to the piston. To provide this spark advance based on engine speed, the centrifugal governor mechanism is used.

This mechanism, Fig. 19, consists of centrifugal advance weights which throw out against spring tension as the engine speed increases. This movement imparts, through a toggle arrangement, rotational motion to the breaker cam, causing it to rotate a number of degrees with respect to the distributor drive shaft. This causes the lobes on the cam to close and open the contacts earlier in the cycle so that the spark is induced and is delivered to the cylinder earlier with respect to the position of the upward moving piston.

In servicing the distributor, all weights should be removed from the hinge pins, cleaned and checked for excessive wear, either in the weights or pins, or the plate which is slotted for the movement of the pins on top of the governor weights. Replacement should be made if there is any appreciable wear in the slots, as any wear at this point would change the characteristic of the spark advance.

If these parts are in good condition, the hinge pins should be lubricated before being reassembled, by greasing the hinge pins and filling the pockets in the governor weights with grease. Do not use vaseline for this purpose as its melting point is comparatively low.

When installing new centrifugal governor assemblies, it is important that the spacer washers between the housing and shaft be installed correctly. If incorrectly installed, the governor assembly will be too high, causing it to rub against the bottom of the breaker plate.

On some distributors, both springs are alike, while on others there is one heavy and one light spring, as in Fig. 19. Another combination that may be found is an additional flat spring on the outside of the outer spring posts, Fig. 20. As the governor speed is increased, the flat springs are first pulled against the posts by the eyes of the coil springs to provide a rapid spark advance of a few degrees before the coil springs pull against the spring posts.

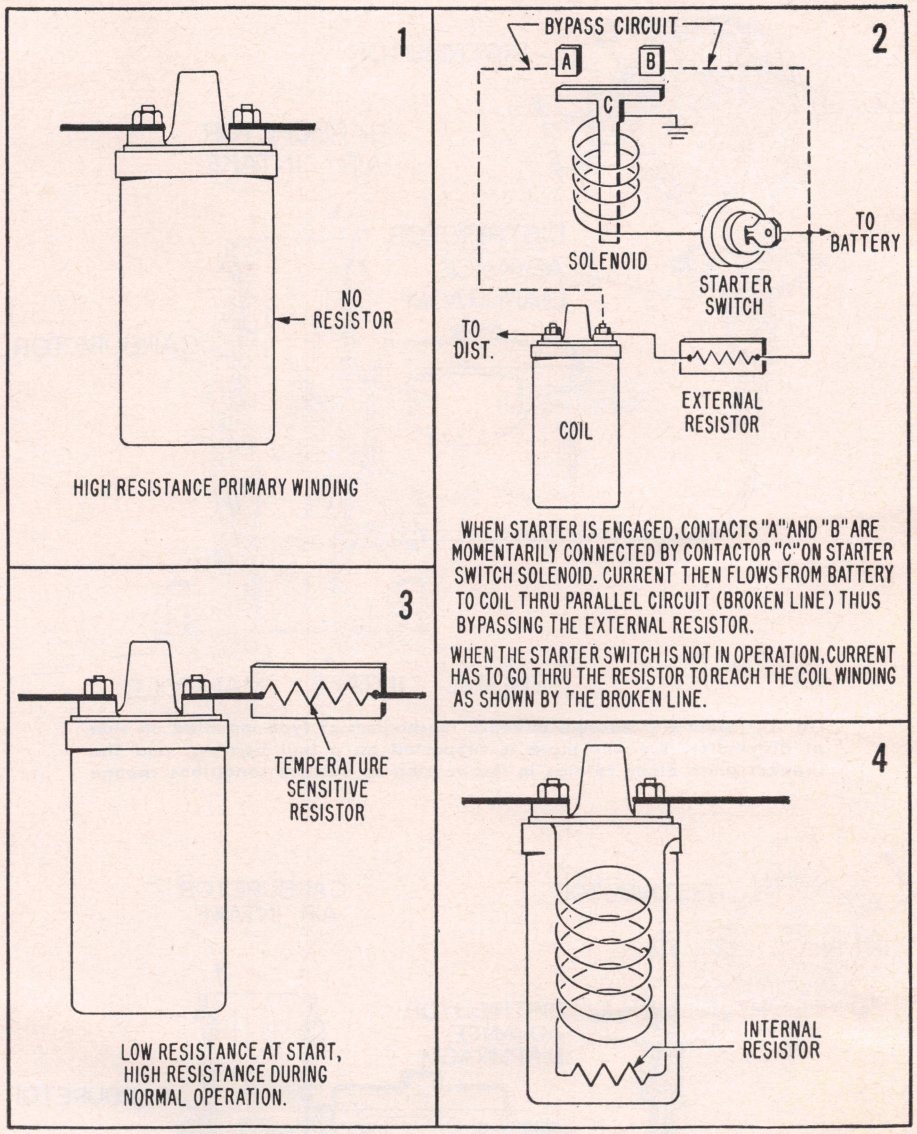

Fig. 18 Wiring diagrams of 12-volt coil and resistor circuits

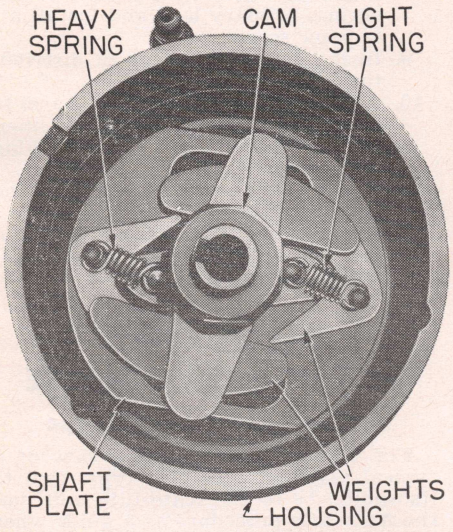

Fig. 19 Top view of Delco-Remy distributor with breaker plate removed to show centrifugal advance mechanism

VACUUM ADVANCE

The two types of vacuum advance mechanisms used on Auto-Lite and Delco-Remy distributors are illustrated in Figs. 21 and 22. Both types make use of a spring-loaded diaphragm which is connected through linkage to the distributor. The spring loaded side of the dia-

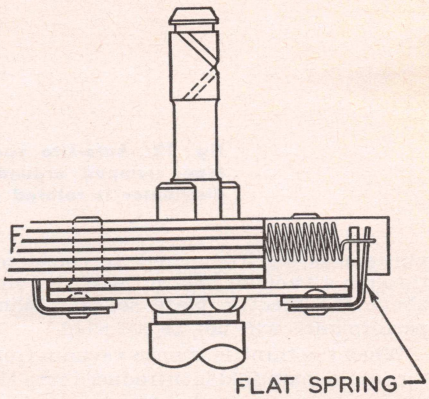

Fig. 20 Flat spring used on some governors to provide a rapid spark advance

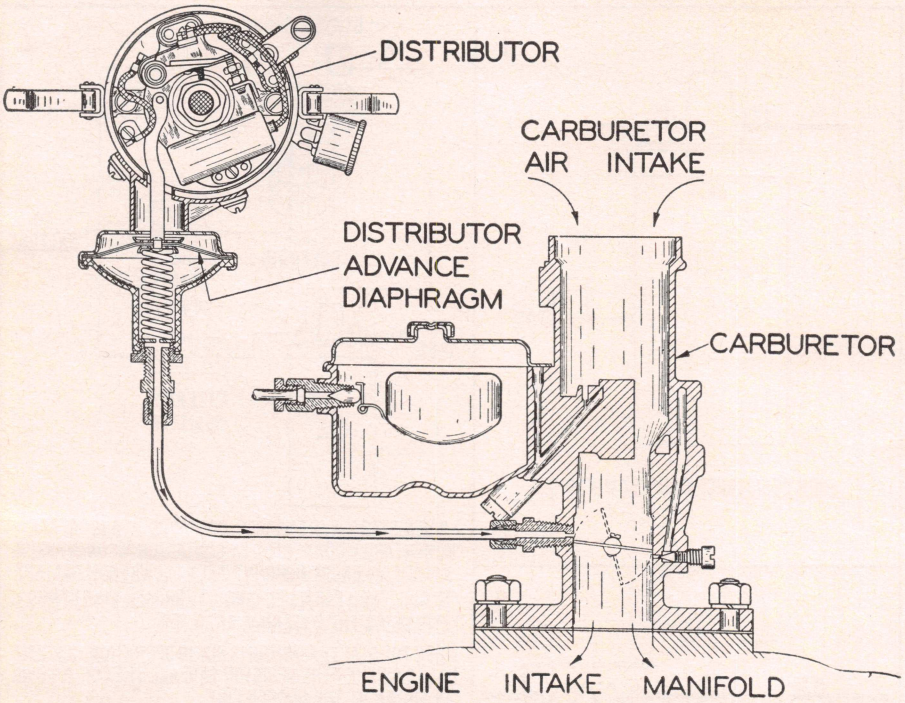

Fig. 21 Auto-Lite vacuum advance mechanism of type mounted on side of distributor. Breaker plate is supported on a ball bearing, and the breaker plate alone rotates in the housing as vacuum conditions change

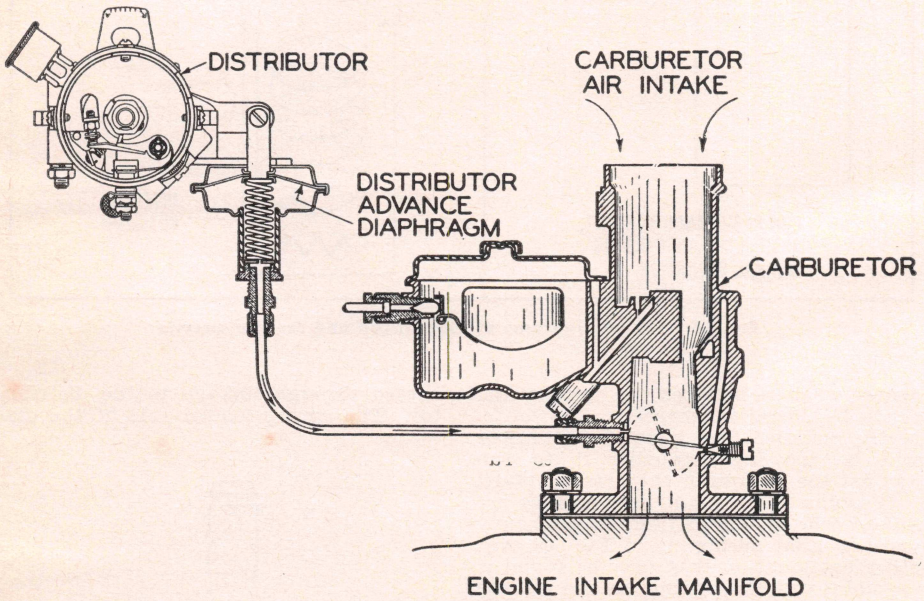

Fig. 22 Auto-Lite vacuum advance mechanism of type clamped around distributor so that entire distributor is rotated as vacuum conditions change

phragm is air tight and is connected through a vacuum line to the carburetor above the throttle plate so that idling performance will not be affected.

When the throttle is open vacuum from the intake manifold is introduced into the vacuum advance mechanism and the diaphragm is pulled against the spring causing the distributor to advance.

In Fig. 21 the mechanism is attached to the distributor breaker plate so that the breaker plate rotates. In Fig. 22, the mechanism is connected to the distributor body so that the entire distributor moves. In both cases, the rotational movement carries the contact points around to an advanced position so that the breaker cam closes and opens the points earlier in the cycle.

See Holley Distributor Service for vacuum advance data for these units.

Auto-Lite IBP Distributors

Used on some late model Dodge trucks, this distributor uses a very different type vacuum spark advance. Unlike other systems which either rotate the breaker plate or the entire distributor when manifold vacuum is high, the IBP breaker plate is pivoted in such a way that the points swing in an arc about the cam when the vacuum advance unit is in operation. Thus, cam angle and breaker point gap change as high manifold vacuum advances the spark. For this reason cam angle should be checked with the vacuum line disconnected and the point gap checked or adjusted when the vacuum advance unit is in full retard position.

AUTO-LITE & CHRYSLER DISTRIBUTOR SERVICE

If the distributor has been disassembled, reassemble as follows, referring to Figs. 23 and 24 for guidance.

1. Check operation of centrifugal weights and weight springs for distortion. Lubricate governor weights.
2. Inspect all bearing surfaces and pivot pins for roughness, binding, or excessive looseness.
3. Install cam spacer (chamfered end down) on distributor shaft.
4. Slide cam and yoke on distributor shaft. Engage weight lugs with slots in yoke as shown in Fig. 25. Install cam retaining clip, being sure it is properly seated in distributor shaft groove.
5. Lubricate and install two concave washers for Auto-Lite distributors or a single flat thrust washer for Chrysler distributors. Position washers on shaft and slide shaft into distributor body.
6. Position lower thrust washer and drive collar on lower end of shaft and install retainer pin.
7. Install oiler wick and oiler.
8. Install breaker plate assembly, align condenser lead, breaker point spring, primary lead and install attaching screw.
9. Install felt wick in top of distributor cam.
10. Attach vacuum advance unit arm to breaker plate and install retainer. Install vacuum unit attaching screws and washers.
11. Test breaker arm spring tension and adjust breaker gap.
12. Lubricate felt pad in top of distributor cam with 3 to 5 drops of light engine oil and install rotor.

DELCO-REMY DISTRIBUTOR SERVICE

Internal Adjustment Type

Fig. 26 shows an exploded view of a typical distributor of this type. Due to its similarity to the Auto-Lite unit, use the Auto-Lite procedure as a guide when assembling this unit.

External Adjustment Type

If the distributor has been disassem-

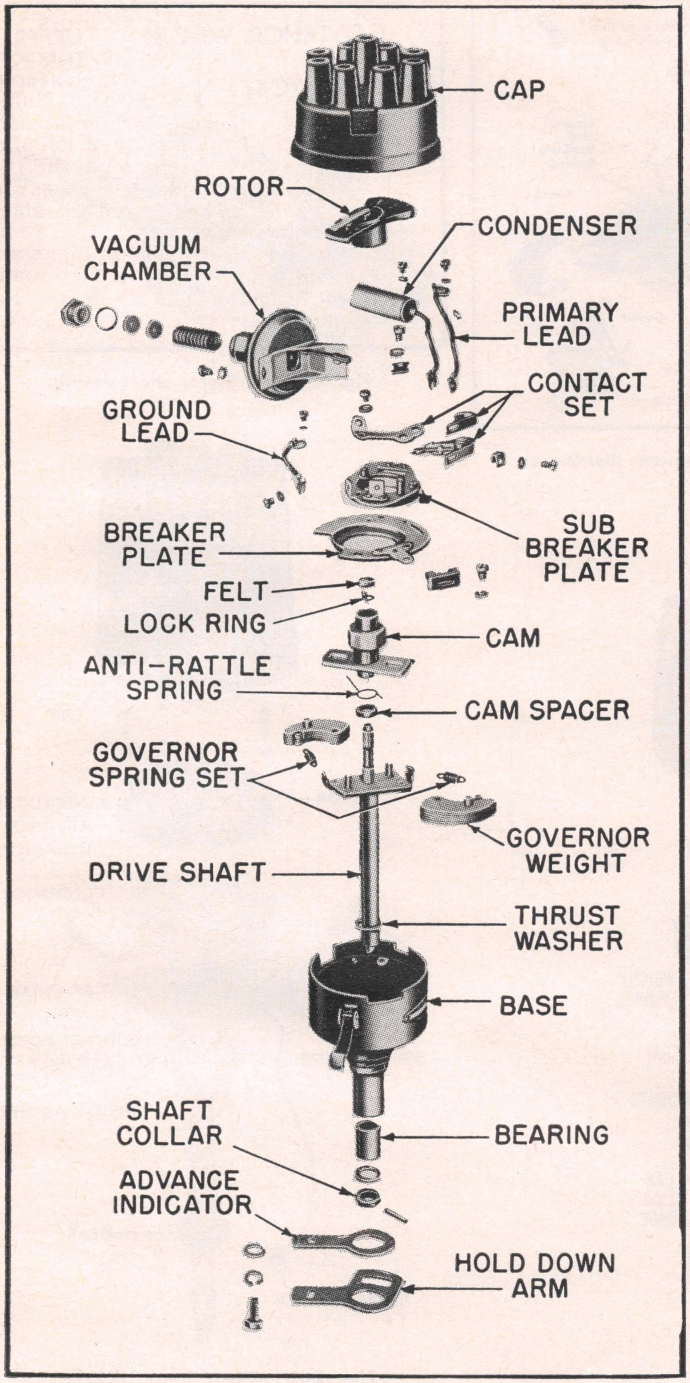

Fig. 23 Disassembled view of a typical Autolite distributor

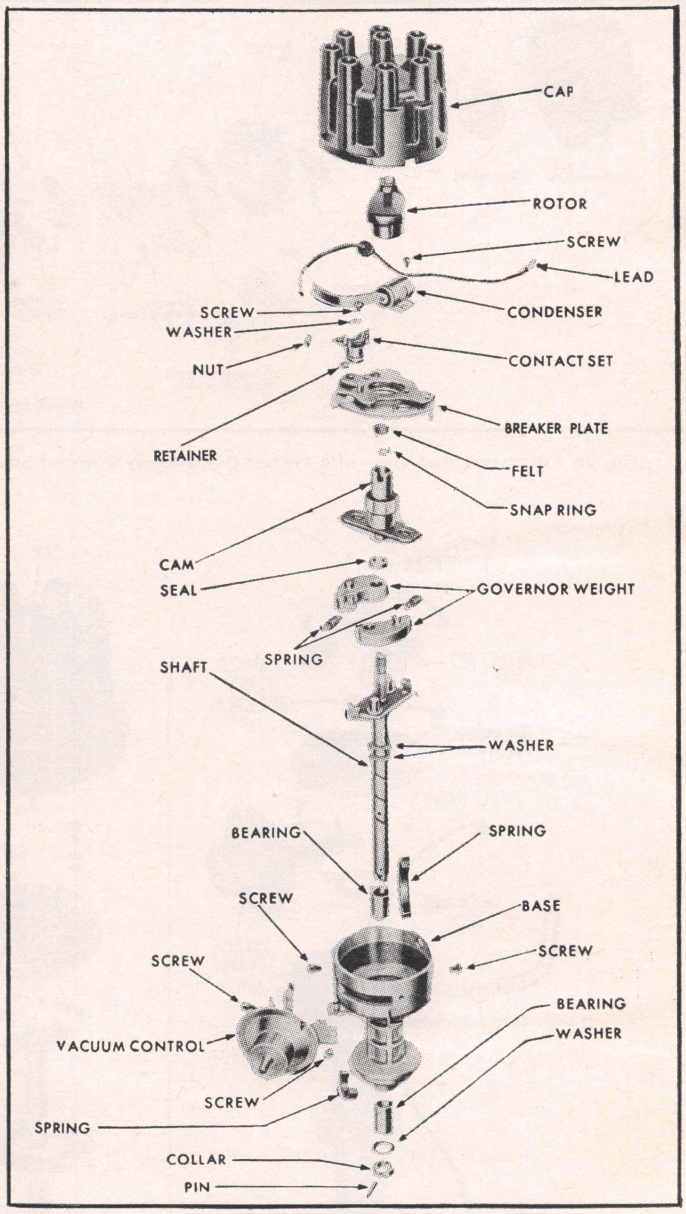

Fig. 24 Disassembled view of a typical Chrysler Corp. distributor

bled, refer to Fig. 27 for guidance when reassembling.

1. Place gasket on shaft housing.
2. Place felt washer around bushing in housing.
3. Install vacuum advance unit.
4. Install breaker plate in housing and spring retainer on upper bushing.
5. Install condenser.
6. Install breaker point set.
7. Install cam and weight base assembly on shaft. If lubrication in grooves at top of shaft was removed during disassembly, replace with Plastilube #2 or its equivalent.
8. Install shaft and cam weight assembly in housing.
9. Using a pin, install driven gear to shaft.
10. Install advance weights and springs.
11. Install cam lubricator
12. Install rotor.
13. Check breaker arm spring tension and adjust breaker gap.

Corvair 1960-61 Distributor

This distributor, Fig. 28, has the breaker plate located below the centrifugal advance mechanism and uses the outer diameter of the shaft bushing for its bearing surface. The position of the vacuum control unit when mounted on the distributor housing determines the location of the breaker plate. Note the calibrated scale stamped on top of the breaker plate, Fig. 29. To correctly position the breaker plate during assembly at the factory a mark on the calibrated scale is located opposite the edge of the slot in the distributor housing. This position should not be changed unless there is evidence that the plate has been moved from its original setting.

If the distributor has been disassembled, refer to Fig. 28 for guidance when reassembling.

1. Install felt washer around bushing in housing.
2. Install vacuum unit but do not tighten hold-down screws at this time.
3. Install breaker plate in housing and spring retainer on upper bushing.

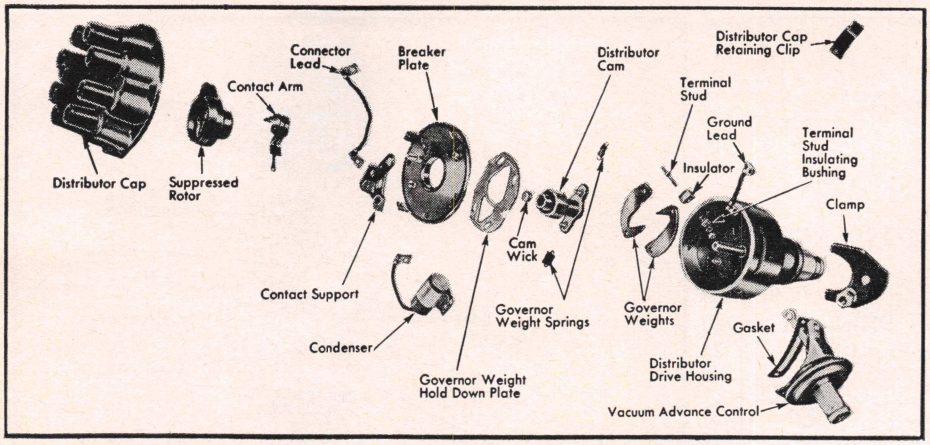

Fig. 26 Disassembled view of a typical Delco-Remy internal adjustment distributor

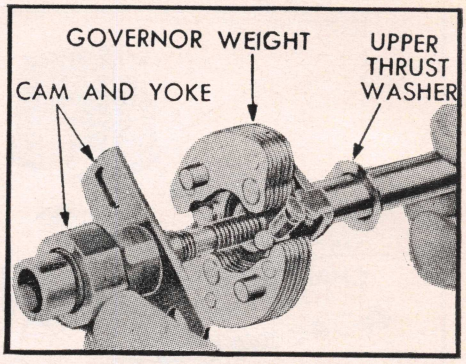

Fig. 25 Distributor shaft details

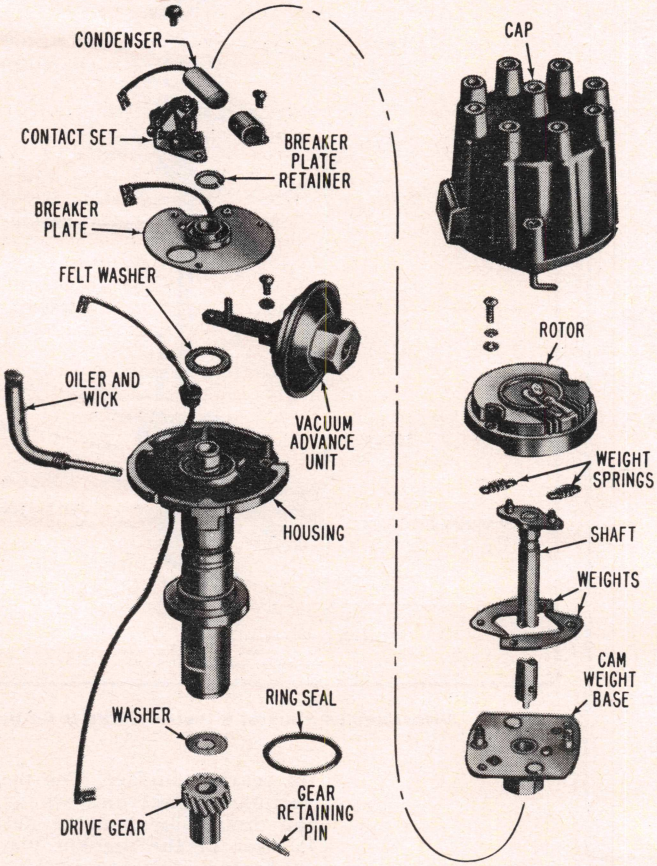

Fig. 27 Delco-Remy external adjustment distributor

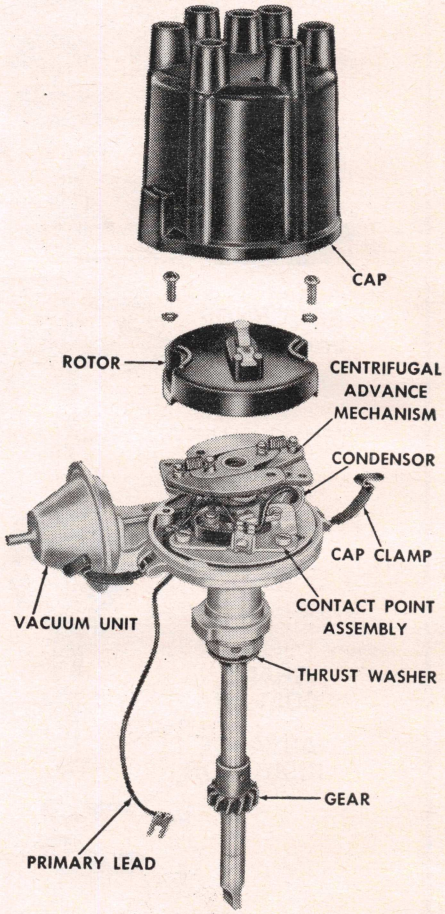

Fig. 28 Delco-Remy distributor used on Corvair 1960-61

4. Position breaker plate with 23° mark in line with scribe mark on housing, Fig. 29, and tighten vacuum unit hold-down screws.
5. Install breaker points.
6. Install condenser.
7. Install cam and weight base assembly on shaft. If lubrication in grooves at top of shaft was removed during disassembly, replace with Plastilube #2 or equivalent.
8. Install shaft and cam weight assembly in housing.
9. Slide thrust washers and gear on shaft and secure with pins.
10. Install advance weights and springs.
11. Install rotor.
12. Adjust breaker arm spring tension and breaker points.

Corvair 1962-63 Distributor

If the distributor has been disassembled, reassemble it as follows. Fig. 30 shows the details of the breaker plate and attaching parts.

1. Replace cam assembly to shaft. Lubricate top end of shaft with light engine oil prior to replacing.
2. Install weights on their pivot pins. Install weights, weight cover and stop plate.
3. Lubricate shaft and install in housing.
4. Install thrust washers and driven gear to shaft and secure with roll pins. Check to see that shaft turns freely. Install driven gear with mark on hub in line with rotor segment.
5. Install breaker plate.
6. Attach condenser and breaker point set in proper location with appropriate attaching screws, Fig. 30.

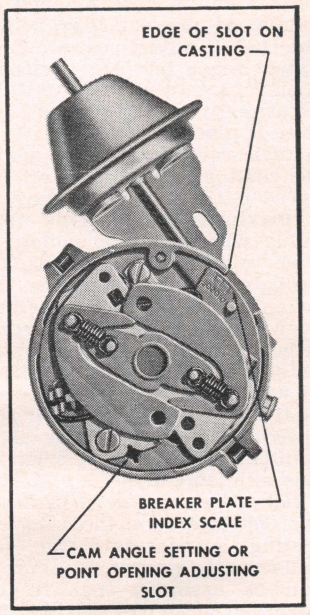

Fig. 29 Corvair 1960-61 distributor showing calibrated scale stamped on top of breaker plate

Connect primary and condenser leads to breaker point set quick disconnect terminal. *Contact point set pilot must engage matching hole in breaker plate.*

7. Attach vacuum control assembly to distributor housing, using upper mounting holes.
8. Adjust breaker arm spring tension and breaker gap.
9. Install rotor.

D-R EXTERNAL ADJUSTMENT TYPE DISTRIBUTOR WITH BUILT-IN SPEED GOVERNOR

Except for the built-in maximum speed governor, Fig. 31, this distributor is similar to the standard external adjustment type.

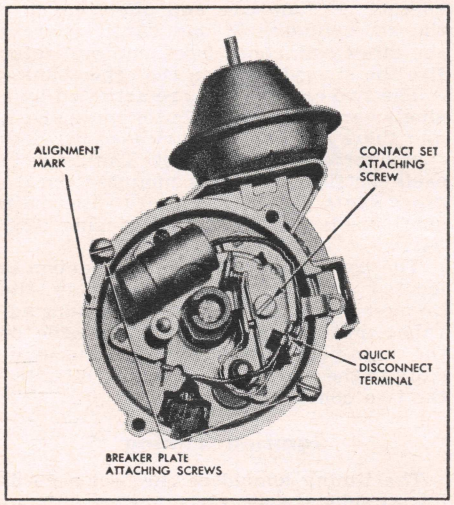

Fig. 30 Breaker plate installation. 1962-63 Corvair

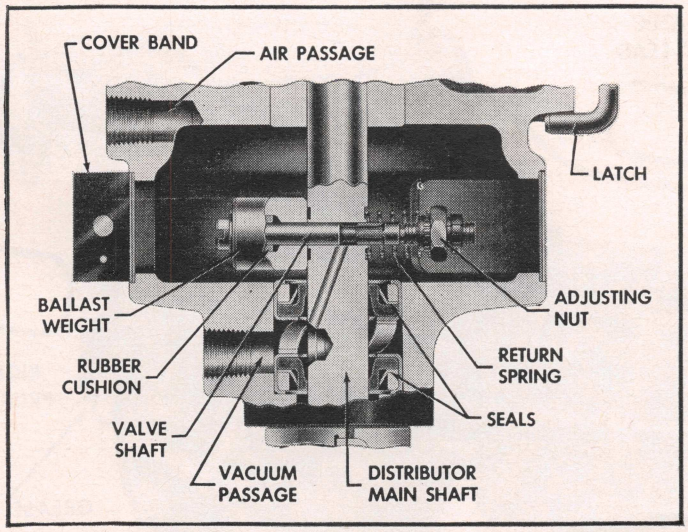

Fig. 31 Delco-Remy distributor speed governor mechanism

The governor mechanism, encased in a chamber in the distributor housing, is assembled on and revolves with the distributor shaft. Disassembly, assembly and adjustment of the governor mechanism is made through external openings in the casting that are covered with a removable cover band.

The governor assembly consists of a valve shaft extending through the distributor main shaft. One end of the shaft has a slotted head, whereas the opposite end is threaded to take the adjusting nut. Assembled to the slotted head of the valve shaft is a plain washer, a ballast weight, and a rubber shock absorbing sleeve inside the weight. Assembled on the opposite end is a return spring and a self-locking adjusting nut.

Fig. 32 shows a simplified diagram of the air flow and vacuum connections between the carburetor and distributor. An air line connects the carburetor air cleaner to the governor chamber in the distributor housing. A vacuum line connects the lower opening in the distributor housing to the carburetor actuator.

When the distributor shaft revolves, the centrifugal force of the weight pulls against the spring, causing the valve shaft to move transversely in the main shaft. The slots on the valve shaft move into the main shaft of the distributor, gradually restricting the flow of air. When this restriction occurs, vacuum is created in the carburetor actuator, causing it to move the butterfly valve in the carburetor, thereby governing the engine speed. When the valve shaft in the distributor does not restrict air flow, air is brought from the air cleaner through the distributor. An overriding feature on the carburetor butterfly valve allows the foot pedal to control the butterfly valve position except when the vacuum diaphragm pull is sufficient to overcome the opposing spring force.

Governor Adjustment

The distributor governor mechanism can be adjusted off the vehicle to an approximate setting by using an approved tester and the following procedure:

1. With the "spinner" valve (centrifugal valve) adjusted so that at least two threads on the valve are showing behind the nut, mount the distributor in the tester.
2. Screw vacuum adapter into lower vacuum opening on distributor housing.

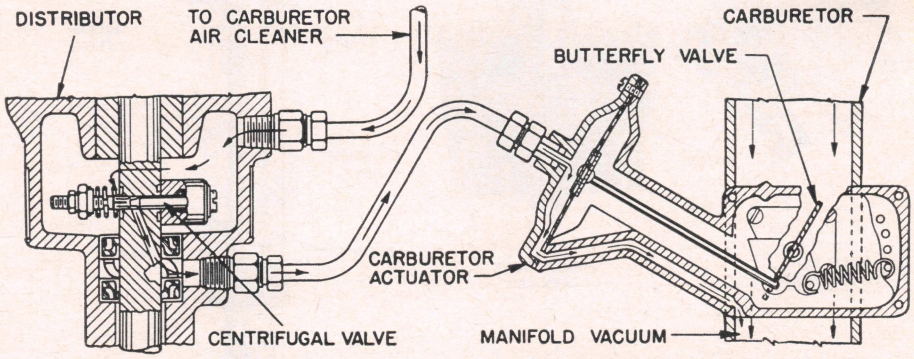

Fig. 32 Air flow and vacuum connections between carburetor and Delco-Remy governed distributor

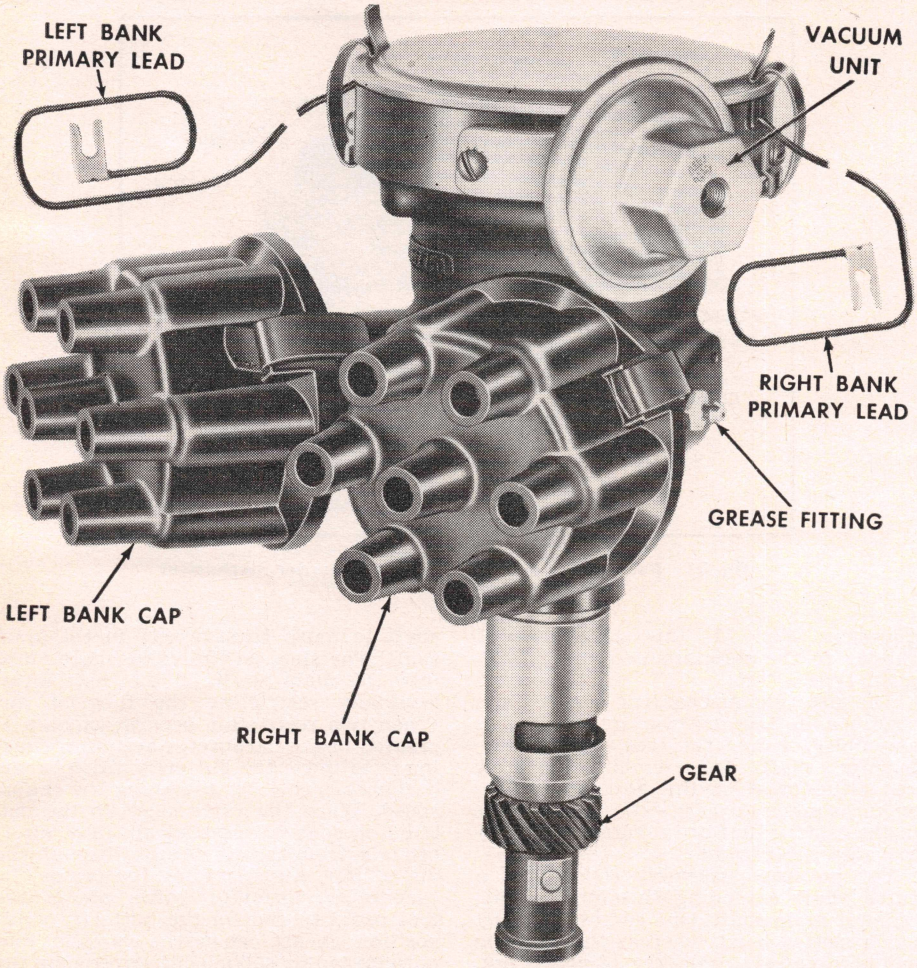

Fig. 33 Delco-Remy twin cap distributor for V-12 engines

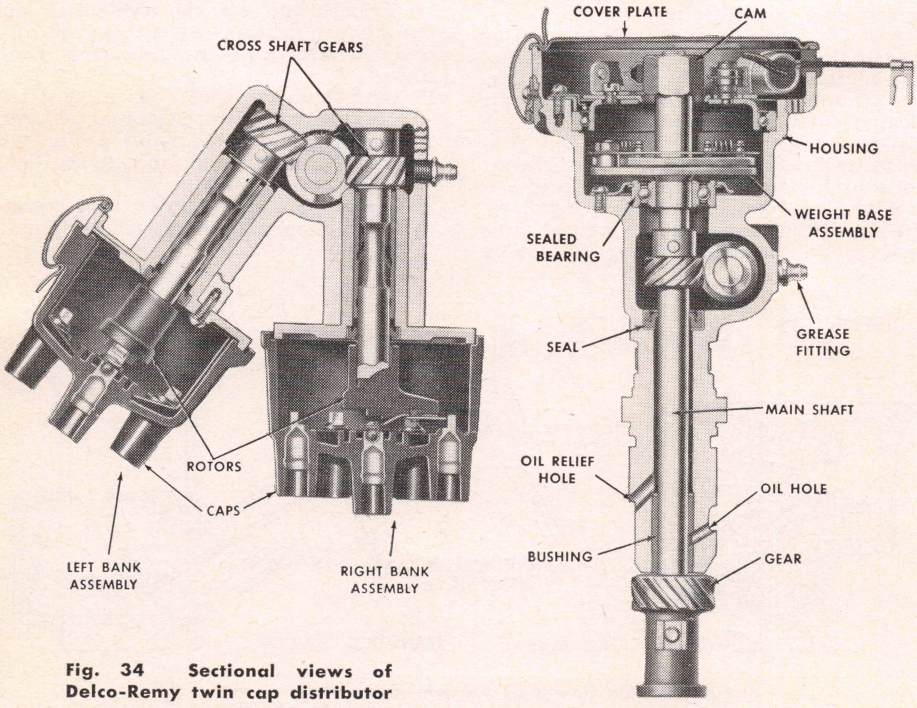

Fig. 34 Sectional views of Delco-Remy twin cap distributor

3. With vacuum hose pinched or bent double to prevent leakage through the hose, adjust vacuum so that gauge reads 5.0″ Hg. Release hose, then repeat adjustment until reading returns to 5.0″ Hg each time the hose is pinched.
4. Attach vacuum hose to adapter on distributor and start tester. Increase speed until vacuum reading reaches a maximum value. This maximum value will vary, depending on the type "spinner" parts used, but will probably be above 3.8″ Hg.
5. After this maximum reading has been reached, slowly decrease distributor speed until vacuum gauge pointer falls back .1″ Hg. The speed at which this .1″ Hg drop occurs will be the approximate no-load governed speed. (Bear in mind that distributor rpm is half engine rpm when making this adjustment.)
6. Final adjustment must be made with the distributor on the vehicle. Road testing is necessary for accurate full-throttle governing; however, it can be assumed that full-throttle governed speed will be about 200 rpm below no-load governed speed. Therefore, the governed speed can be checked by operating the engine at high speed in neutral.
7. To adjust distributor governing mechanisn, stop the engine, remove the cover band from the distributor and turn the centrifugal valve adjusting nut. Fig. 31, holding opposite end of shaft with a screwdriver as adjusting nut is turned.
8. To increase speed limit setting, turn adjusting nut clockwise, and vice-versa.
9. When the cover band is replaced, be sure it covers the openings and is tight so as to prevent dirt from entering the chamber.

D-R TWIN CAP DISTRIBUTOR

Used on GMC V-12 engines, this distributor, Fig. 33, is used with two ignition coils and is constructed with two sets of breaker points and two distributor caps and rotors. This means that one coil, one contact set, one cap and one rotor fire the six cylinders in one bank, whereas the other coil, contact set, cap and rotor fire the six cylinders in the other bank.

The two contact sets are actuated by a single cam on the distributor main shaft, and there are two primary lead-in wires —one for each contact set. The rotor in each distributor cap is mounted onto a *cross shaft* which is geared to the main shaft inside the distributor housing, Fig. 34.

The centrifugal advance mechanism is located on the main shaft under the breaker plate assembly. The vacuum advance unit is mounted onto the side of the main housing and is linked mechanically to the plate onto which are mounted the two contact sets.

Ignition Timing

The timing should be checked according to vehicle manufacturers recommendations. If one bank is timed correctly,

and the other bank is not correct, the two contact sets are out of position with respect to each other. To synchronize the contact sets, follow the procedure outlined below:

Contact Angle

The contact angle of each contact set can be checked with the distributor mounted either on the engine or in a test stand.

1. With the contact angle meter connected to the left bank primary lead, check the contact angle at moderate distributor speed. If adjustment is required, loosen the contact set hold-down screw and turn the eccentric screw, Fig. 35.
2. After retightening the hold-down screw, recheck the contact angle for accuracy.
3. To check the right bank contact set, connect the meter to the right bank primary lead and follow the same procedure.

Synchronizing Contact Sets

The right bank contact set is mounted on an adjustable plate. When the plate is moved, the number of degrees between point opening of the left bank and right bank contacts is changed. The plate must be adjusted so that the specified number of degrees occurs between firing of each set.

To accomplish this, mount the distributor in a test stand and check the firing difference in degrees by connecting the test stand lead alternately to each primary lead. Adjust by loosening the two hold-down screws and turning the eccentric screw of the adjustable plate.

An alternate method of checking is to observe the timing of the right bank of cylinders on the engine when the left bank is correctly timed. If the right bank is also correctly timed, the contacts are synchronized.

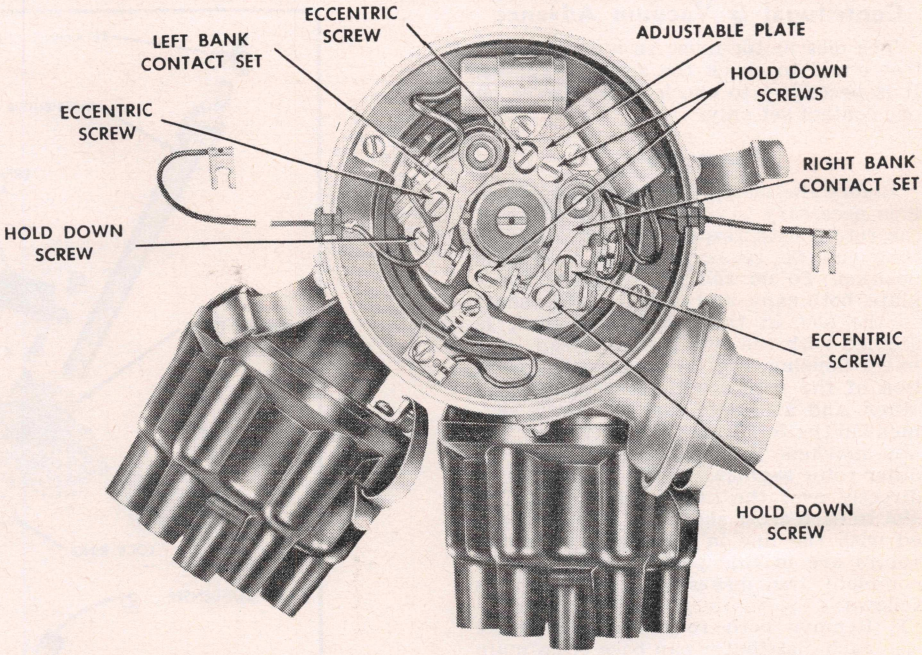

Fig. 35 Top view of Delco-Remy twin cap distributor (cover plate removed)

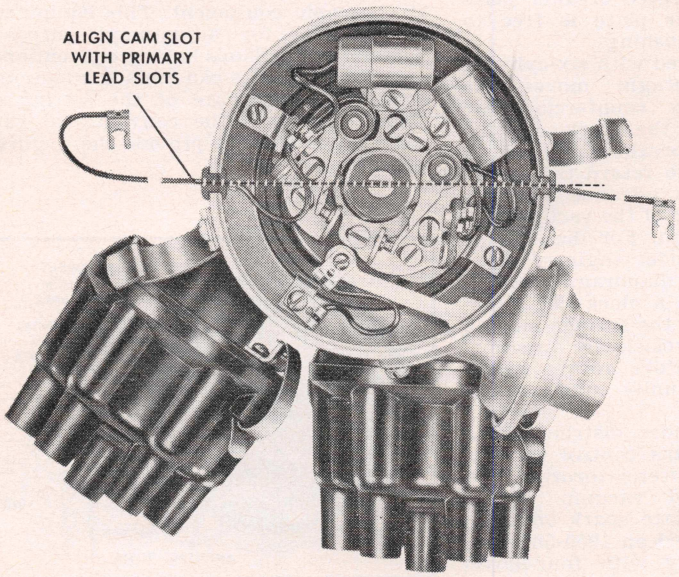

Fig. 36 Delco-Remy twin cap distributor showing cam slot alignment

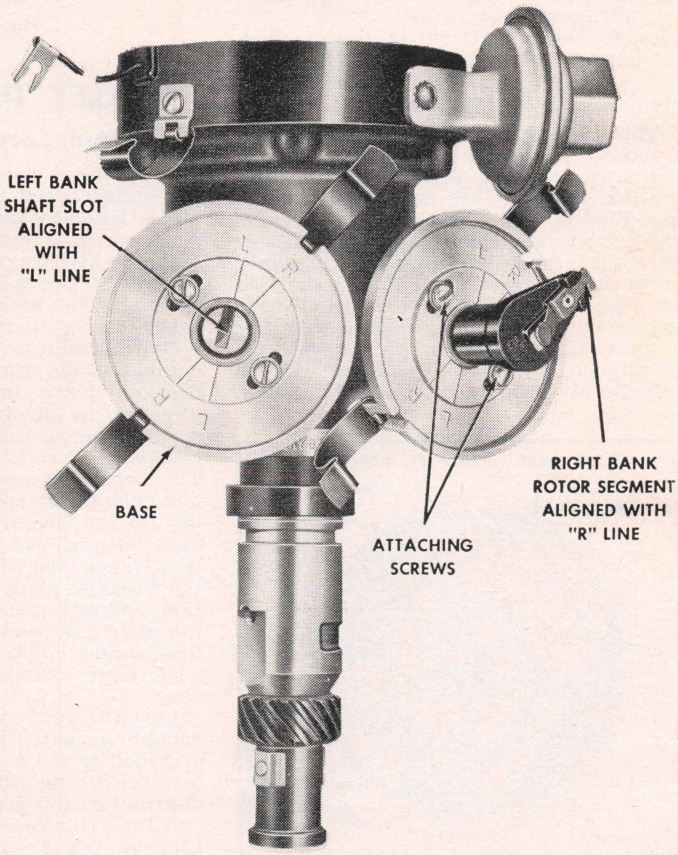

Fig. 37 Delco-Remy twin cap distributor showing cross shaft slot alignment

Centrifugal & Vacuum Advance

The distributor must be mounted in a test stand to check the advance curves. It is necessary to check these curves on one contact set only.

Disassembly

Before the distributor is disassembled, it is necessary to observe the position of the rotors with respect to each other, so they can be reassembled in the same position. To do this, remove the cover plate, both caps, and turn the main shaft so the slot in the top of the shaft is aligned with the two primary lead slots in the housing, Fig. 36. Observe the position of the rotors with respect to each other, and also note that the rotor segment in the *left bank* is directly over the line marked "L" in the base, and the other rotor segment in the *right bank* is directly over the line marked "R". The slot in each cross shaft will also be aligned with the line in each base when the rotors are in this position, Fig. 37. To complete the disassembly, proceed as follows:

1. Remove both rotors, and separate each distributor cap base from main housing by removing the attaching screws.
2. Pull cross shafts from main housing.
3. Remove vacuum unit.
4. Remove breaker plate hold-down screws and lift plate out of housing.
5. Detach cover over weight base assembly and separate cam from main shaft.
6. Remove bearing hold-down plate, and gear from shaft.
7. Lift main shaft out of top of housing.

Reassembly

This procedure is the reverse of disassembly. To install the cross shafts correctly, align the main shaft slot with the two primary lead holes in the housing, Fig. 36, and install the cross shafts so the rotor segments will align directly over the proper line, Fig. 37. To obtain an accurate adjustment, loosen the two attaching screws and rotate the base so the line marking is aligned with the cross shaft slot. When the cross shaft is aligned, the rotor segment will be directly over the line marking as shown.

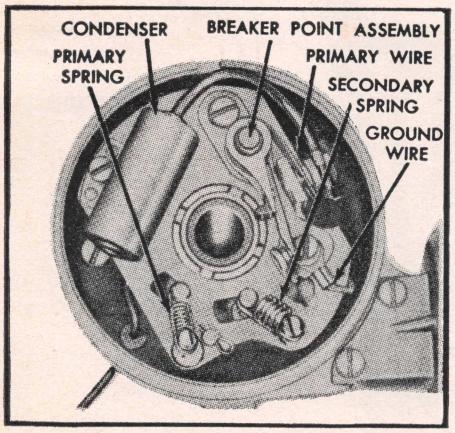

Fig. 38 Breaker plate installation. Holley Loadamatic distributor

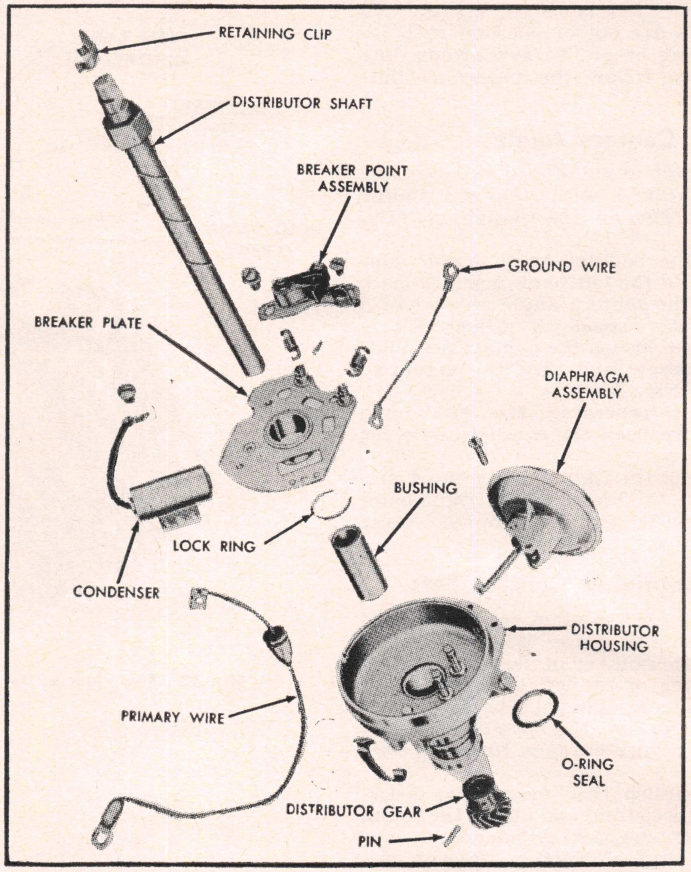

Fig. 39 Disassembled view of Holley Loadamatic distributor

HOLLEY DISTRIBUTORS

Ford Loadamatic Type

With these distributors, Figs. 38 and 39, engine speed and load requirements are satisfied by the action of the breaker plate which is controlled by a vacuum-actuated diaphragm working against the tension of two calibrated breaker plate springs. The breaker plate is free to rotate on the shaft bushing.

For distributors used with six-cylinder engines, the diaphragm moves the breaker plate in a counterclockwise direction to advance the spark, and the springs move the breaker plate in a clockwise direction to retard the spark. The degree of spark advance is determined by the strength of the vacuum acting on the diaphragm. For distributors used with eight-cylinder engines, spark is advanced by the diaphragm moving the breaker plate in a clockwise direction, and retarded by the springs moving the plate in a counterclockwise direction. Six-cylinder distributors rotate clockwise, eight-cylinder units counterclockwise.

For all eight-cylinder distributors, a vacuum-actuated spark control valve is attached to the carburetor throttle body to control manifold vacuum to the distributor and regulate spark advance.

All distributors used on 1955-56 Ford, Lincoln and Mercury with four-barrel carburetor incorporate a double diaphragm for better control of breaker plate advance characteristics. The purpose of the second diaphragm is to provide a rapid spark retard at the acceleration tip-in point. The primary spark control diaphragm operates in the same manner as the single type diaphragm.

Vacuum Advance, Adjust

The two breaker plate springs are precision set at the factory with special stroboscopic equipment. This equipment is available for adjustment purposes commercially. Shops having conventional distributor testers can include a mercury column to take care of the setting of these springs as the conventional vacuum gauge will not provide the required accuracy.

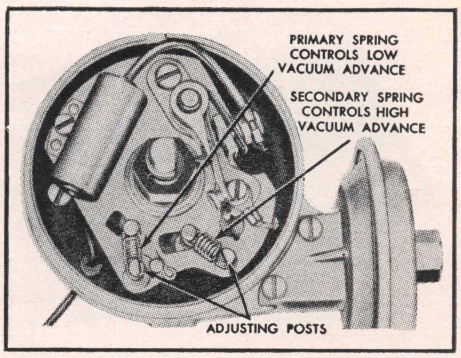

Fig. 40 Spark advance adjustment on Holley Loadamatic distributor

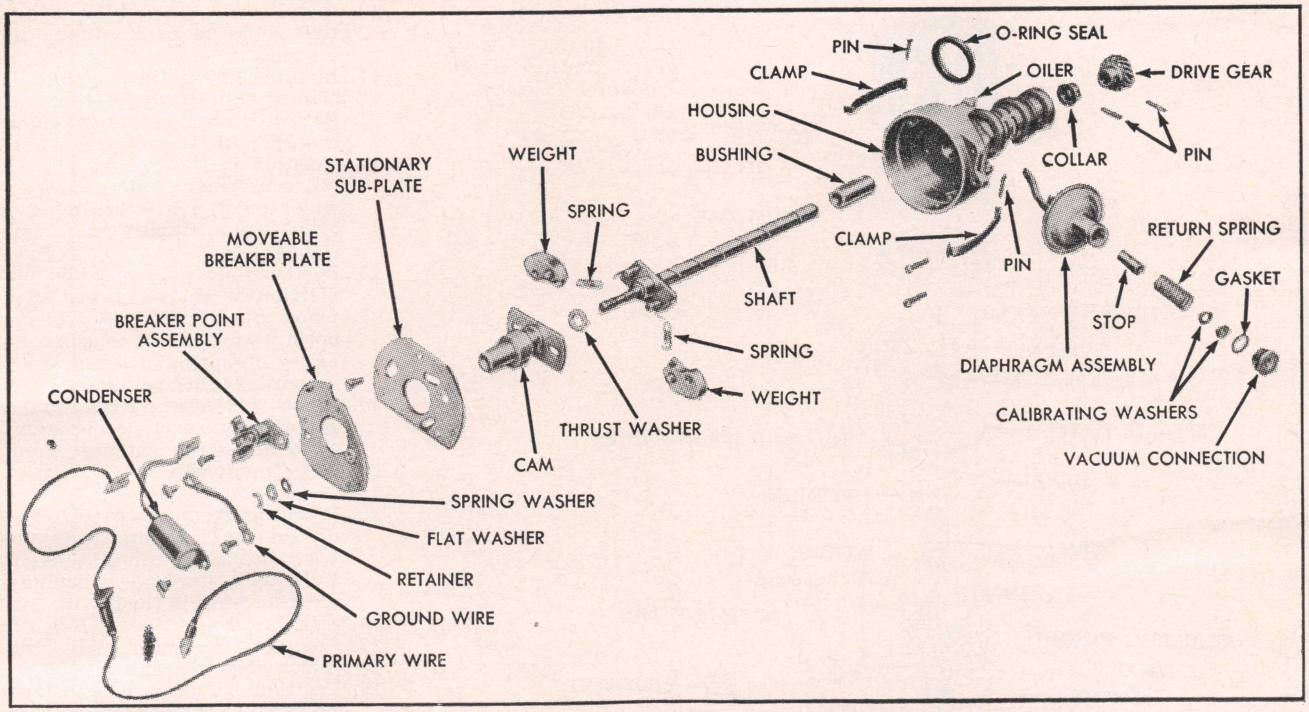

Fig. 42 Disassembled view of Holley dual advance distributor

The spring adjusting posts shown in Fig. 40 provide the means of adjusting the spark advance.

Distributor Service

If the distributor has been disassembled, refer to Fig. 39 for guidance on reassembly.

1. Pass primary wire assembly through opening in distributor, working from inside to outside of distributor housing. Pull wire through opening until locating stop is flush with inside of distributor. Install ground wire.
2. Position breaker plate in body and secure with lock ring.
3. Position breaker point set on breaker plate, Fig. 38. Be sure pivot pin enters hole in breaker plate.
4. Connect ground wire to breaker plate at end closest to adjustment slot. Install other screw and lock washer at opposite end of assembly.
5. Install condenser.
6. Install two return springs on adjustment and breaker plate post, Fig. 40. Make sure secondary spring is adjacent to vacuum chamber.
7. Install vacuum unit.
8. Insert top of vacuum rod through breaker plate. Attach rod with retainer.
9. Slide shaft into body, using care not to damage rubbing block on breaker points.
10. Press gear on shaft. If a new shaft is being installed, place a .028" feeler in position against distributor mounting flange, press gear on shaft until it bottoms against feeler gauge. Remove feeler gauge and secure with ⅛" pin after drilling hole in shaft.
11. Install distributor cap clamps. Lubricate cam with high temperature, non-fiber grease.
12. Adjust breaker arm spring tension, align and adjust breaker points, adjust vacuum advance and cam dwell.

Holley Dual Advance Distributor

This distributor, Figs. 41 and 42, is similar to conventional design in that both a centrifugal advance mechanism is provided to regulate ignition timing according to speed and a vacuum advance unit to regulate ignition timing according to load. However, unlike other make distributors, the centrifugal advance mechanism can be adjusted through a

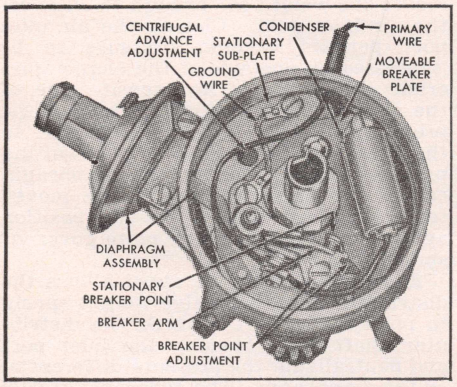

Fig. 41 Breaker plate installation. Holley dual advance distributor

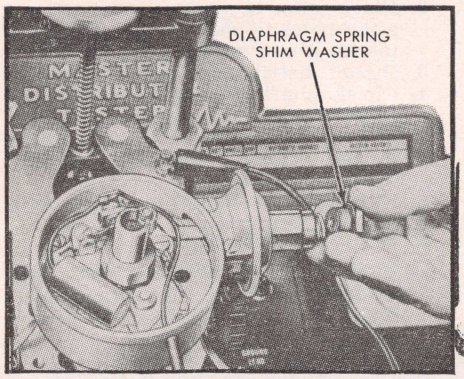

Fig. 43 Vacuum advance adjustment. Holley dual advance distributor

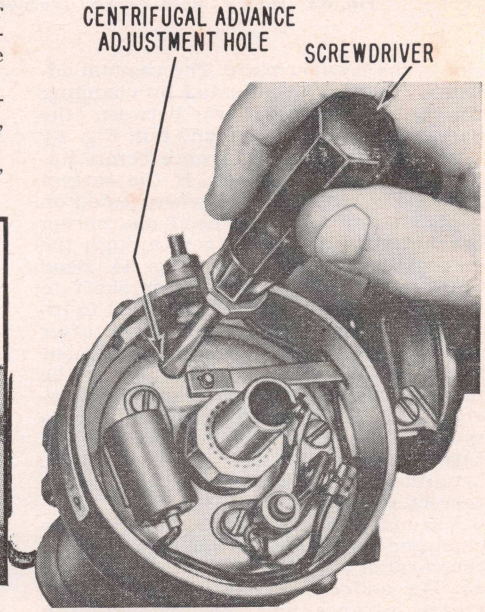

Fig. 44 Adjustment of centrifugal advance

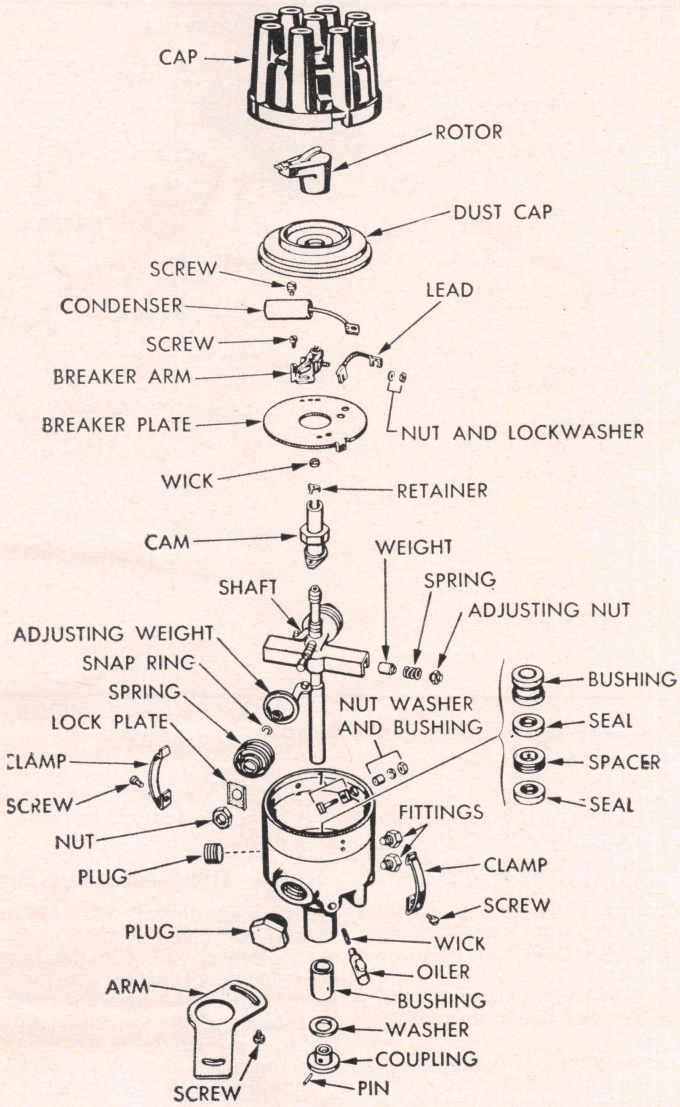

Fig. 45 Holley "Roto-Vance" (carburetor governor control) distributor

slot in the breaker plate. The vacuum advance can also be adjusted by changing the calibration washers between the vacuum chamber spring and nut, Fig. 43.

Adjust centrifugal advance before adjusting vacuum advance. If the correct advance is not indicated when tested on a distributor machine, bend one spring bracket with a screwdriver through the hole in the breaker plate, Fig. 44. Bend bracket away from distributor shaft to decrease advance and toward shaft to increase advance. Identify bracket after adjustment is made. After an adjustment has been made to one spring, check the minimum advance point again. Then operate distributor at the specified rpm to give an advance just below maximum. If this advance is not up to specifications, bend the other spring bracket to give the correct advance.

Vacuum advance can be adjusted by changing the calibrated washers between the vacuum chamber spring and nut, Fig. 43. The addition of one washer will decrease advance and the removal of a washer will increase advance.

Distributor Service

If the distributor has been disassembled, refer to Fig. 42 for guidance upon reassembly.

1. Oil shaft and slide it into distributor body.
2. Place collar in position on shaft and align holes in collar and shaft, then install a new pin.
3. Install distributor cap clamps.
4. Check shaft end play with feeler gauge placed between collar and base of distributor. If shaft end play is not within .024-.035", replace shaft and gear.
5. Fill grooves in weight pivot pin with ball bearing grease.
6. Position weights in distributor.
7. Install weight springs, being sure proper weight, spring and adjustment bracket are assembled together.
8. Install upper thrust washer.
9. Fill grooves in upper portion of distributor shaft with ball bearing grease.
10. Install cam assembly, being sure that slots in cam engage pins in weights.
11. Install cam retainer. Apply a light film of cam lubricant to cam lobes. Saturate wick with 10W engine oil. Install wick in cam.
12. Position stationary sub plate in distributor. Install one end of ground wire under plate retaining screw close to diaphragm mounting flange.
13. Position movable breaker plate in distributor. Install spring washer on pivot pin. Place flat washer on spring washer. Be sure protruding edges of spring washer are facing upward. Install retainer.
14. Install new breaker point assembly. Install ground wire on breaker point attaching screw furthest from point adjustment slot.
15. Install condenser.
16. Working from inside to outside of distributor housing, pass primary wire through opening in distributor. Pull wire through opening until locating stop is flush with inside of distributor.
17. Connect condenser wire and primary wire to breaker points.
18. Position diaphragm and hook its link over pin on breaker plate. Install diaphragm attaching screws. Secure link with retainer. Install oil seal.
19. Adjust breaker arm spring tension, align and adjust breaker points and check and adjust cam dwell, centrifugal and vacuum advance.

Holley "Roto-Vance" Distributor

This distributor, Fig. 45, functions as a standard ignition unit and in addition acts as a control unit for the engine speed governor valves located below the carburetor, Fig. 46.

The distributor-governor consists of an adjusting nut, a calibrating spring and governor weight. Below governing speed the weight cannot overcome the spring tension and the air inlet port is open. Thus air is permitted to flow through the distributor shaft, the governor air line and through the engine governor. This air is at atmospheric pressure.

With an increase of engine speed and distributor shaft rotational speed, centrifugal force is exerted on the weight and it moves out against spring tension. Continued increases of engine speed moves the weight far enough to close off the air inlet port. Closing the air inlet port permits vacuum pressure to be impressed on one side of the engine governor diaphragm. The opposite side of the diaphragm is vented to atmospheric pressure through a connecting line to the fresh air inlet line. The resulting pressure differential on the diaphragm causes the throttle valve to be moved towards a partially closed position against the throttle valve plate governor spring tension.

A decrease in engine speed allows the distributor governor valve weight spring to push the weight towards the distributor shaft, thus opening the inlet port and neutralizing the pressure differential on the diaphragm. The governor throttle plate is returned to its fully open position by the engine governor spring.

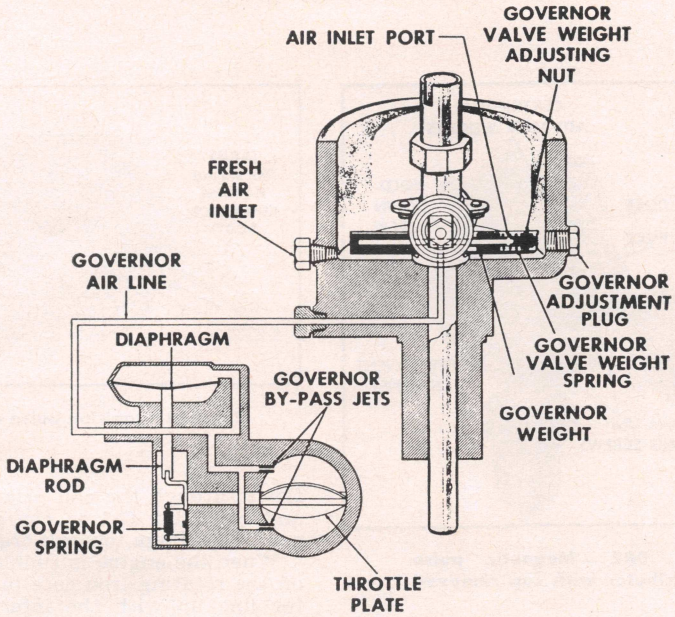

Fig. 46 Diagramatic view of governor system. Holley "Roto-Vance" distributor

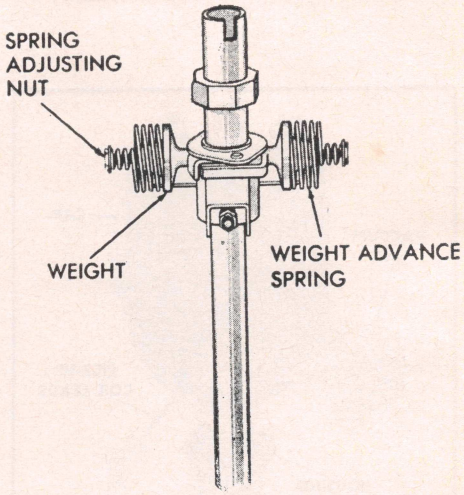

Fig. 47 Adjusting advance weight springs. Holley "Roto-Vance" distributor

Automatic Advance Adjustment

Install distributor on a test bench and remove the adjusting hole cover plug. Check the operation of the automatic advance against specifications given in Truck Chapters. Adjust the weight springs by screwing in or out on the adjusting nuts, Fig. 47, turning both nuts the same amount. Turning in on the nuts will increase the tension and the rpm required to move the weights and will give a retarded advance. Loosening the nuts will allow the weights to move at a slower rpm and will cause the timing to advance earlier. *Be sure nut flats index lock plate.* Where the initial setting is correct but the advance does not follow specifications it is an indication that the advance springs are faulty or the distributor cam is binding on the shaft.

CAUTION—Care should be taken when adjusting the advance mechanism to approximate the specified curve as closely as possible. The spark timing of the engine in operating range is determined directly by the accuracy of the distributor advance mechanism. *It is important to remember that a one-degree error in the distributor advance settings will produce a two-degree error in spark timing when operating in the engine.*

Testing Engine Speed Governor Valve In Test Stand

Operate the test stand vacuum pump. Pinch the end of the vacuum hose and record the highest vacuum reading obtained. Connect the vacuum line to the lowest fitting on the distributor. Make certain that no leaks are present.

Without rotating the distributor shaft, note the vacuum reading on the gauge. If the passages in the distributor are free of obstructions, a desirable very low reading should be obtained. An undesirable high reading will indicate that obstructions in the passages are present, caused by dirt or other causes. The distributor should then be thoroughly checked to determine cause and corrections made.

NOTE—Some test machines have a pipe cleaner type of restrictor. For these tests this restrictor should be removed or an inaccurate reading will be obtained. The vacuum line in the machine must be open.

Rotate the distributor shaft and gradually increase the speed while observing the vacuum gauge. When the distributor shaft speed reaches the rpm necessary to move the governor weight out on its shaft and close the air inlet port, the vacuum reading will "jump" to a high reading almost instantly. The vacuum reading at this rpm and at all higher speeds should be within one or two inches (Hg) of the reading recorded at the start of the test. If the vacuum reading is within the specified one to two inches of the previous reading, it is an indication that the weight valve is sealing the inlet port and that no noticeable leaks are apparent.

Decrease the distributor shaft speed gradually while observing the vacuum gauge. When the speed drops slightly below the governor closing speed, the air inlet port should open, causing a rapid drop in vacuum.

Delco-Remy Transistorized Ignition

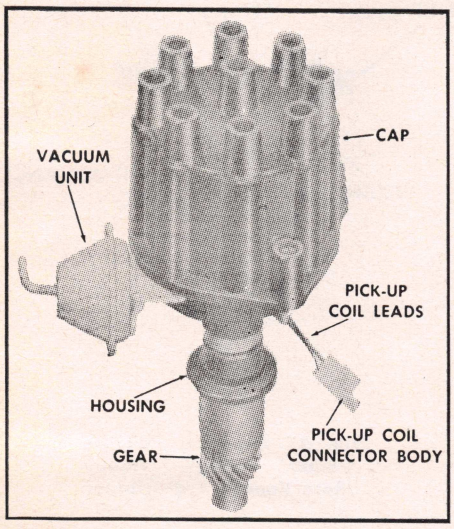

Fig. DR1 Magnetic pulse distributor

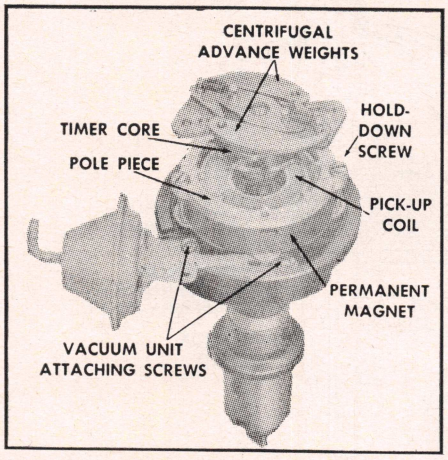

Fig. DR2 Magnetic pulse distributor with cap removed

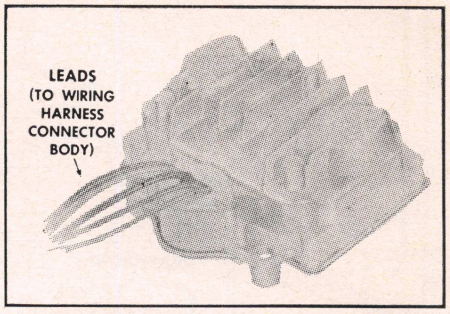

Fig. DR3 Ignition pulse amplifier

DESCRIPTION

Called the *Delcotronic Transistor Controlled Magnetic Pulse Ignition System*, it features a specially designed magnetic pulse distributor, an ignition pulse amplifier, and a special coil. The other units in the system are of standard design, consisting of the resistors or resistance wire, switch and battery. A typical distributor of this type is shown in Fig. DR-1.

Although the external appearance of the distributor resembles a standard distributor, the internal construction is quite different. As shown in Fig. DR-2, an inner timer core replaces the conventional breaker cam. The timer core has the same number of equally-spaced projections or vanes as engine cylinders.

The timer core rotates inside a magnetic pick-up assembly, which replaces the conventional breaker plate, contact point set, and condenser assembly. The magnetic pick-up assembly consists of a ceramic permanent magnet, a pole piece and a pick-up coil. The pole piece is a steel plate having equally-spaced internal teeth, one tooth for each cylinder of the engine.

The magnetic pick-up assembly is mounted over the main bearing of the distributor housing, and is made to rotate by the vacuum control unit, thus providing vacuum advance. The timer core is made to rotate about the shaft by conventional advance weights, thus providing centrifugal advance.

The ignition pulse amplifier shown in Fig. DR-3 consists primarily of transistors, resistors, diodes and capacitors mounted on a printed circuit panel board. Since there are no moving parts, the control unit is a completely static assembly.

Operating Principals

A wiring diagram showing the complete circuit for a typical ignition system is illustrated in Fig. DR-4. Note that

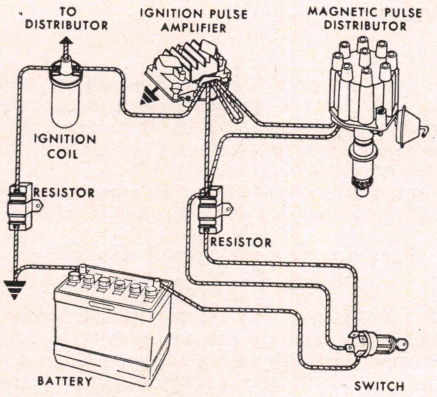

Fig. DR4 Wiring diagram of magnetic pulse distributor circuit

there are two separate resistors used in this type of circuit. The resistor connected directly to the switch is by-passed during cranking, whereas the other resistor is always in the circuit. The use of two resistors permits the required value of resistance to be by-passed during cranking.

In order to fire the spark plug, it is necessary to induce a high voltage in the ignition coil secondary winding by opening the circuit to the coil primary winding. In standard systems, this is accomplished by opening the distributor contact points. In this system, this is accomplished as follows:

When the switch is closed with the engine not running, the current flows through a part of the circuit, Fig. DR-5. The current flows from the battery through the switch and resistor R-6 to the amplifier. Current then flows through transistors TR-1 and TR-2, resistors R-1, R-2 and R-3, and the coil primary winding and resistor R-7 to ground, thus completing the circuit back to the battery. It is important to note that under this condition, full current flows through the coil primary winding, and capacitor C-1 is charged with the positive voltage towards transistor TR-2.

When the engine is running, the vanes on the rotating iron core in the distributor line up with the internal teeth on the pole piece. This establishes a magnetic path through the center of the pick-up coil, causing a voltage to be induced in the pick-up coil. This voltage causes transistor TR-3 to conduct, resulting in current flow in the circuit as shown in Fig. DR-6.

The current flow conditions shown in Fig. DR-6 exist until the charge on capacitor C-1 has been dissipated through resistor R-3. When this happens the system reverts back to the current flow conditions shown in Fig. DR-5. The system is then ready to fire the next spark plug.

Resistor R-5 is called a feedback resistor, and its purpose is to turn TR-3 off when TR-2 returns to the on condition. Resistor R-1 is a biasing resistor which allows transistor TR-1 to operate. Zener diode D-1 protects transistor TR-1 from high voltages which may be induced in the coil primary winding. Capacitors C-2 and C-3 protect transistor TR-3 from high voltages which appear in the system.

TROUBLE SHOOTING

Faulty engine performance will usually be evidenced by engine miss, engine surge, or the engine will not run at all. When trouble shooting the system, it is recommended that the following checks be made in the order listed.

Engine Miss

If the trouble is not due to carburetion, check the timing and the condition of the spark plugs. All the wiirng should be inspected for brittle or cracked insulation, broken strands and loose or corroded connections. The high tension leads in the coil and distributor cap should be checked to make sure they are pressed all the way down in their inserts. If rubber boots are used, they too should be tightly in place over the connections. Also, the outside of the distributor cap and the coil cover should be inspected for carbonized paths which would allow high tension leakage to

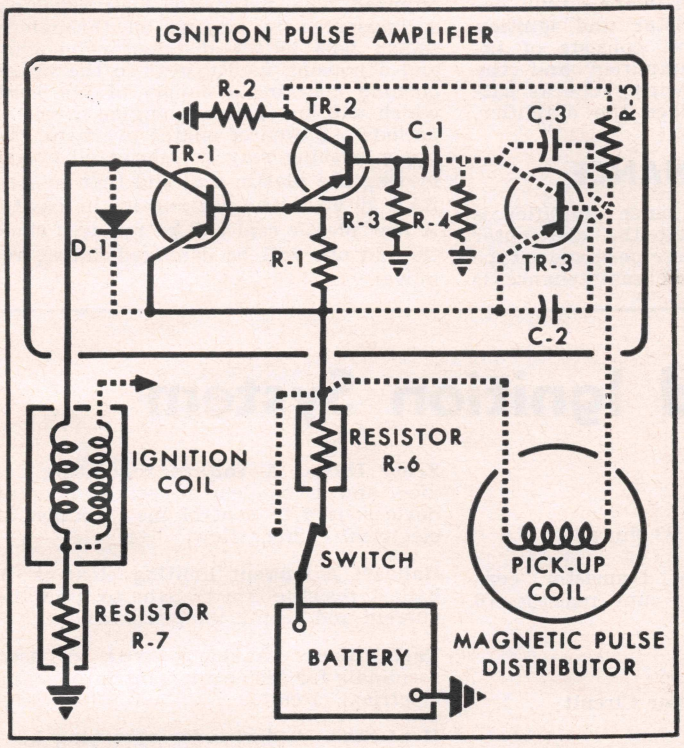

Fig. DR5 Wiring diagram showing current flow in solid lines with switch on and engine not running

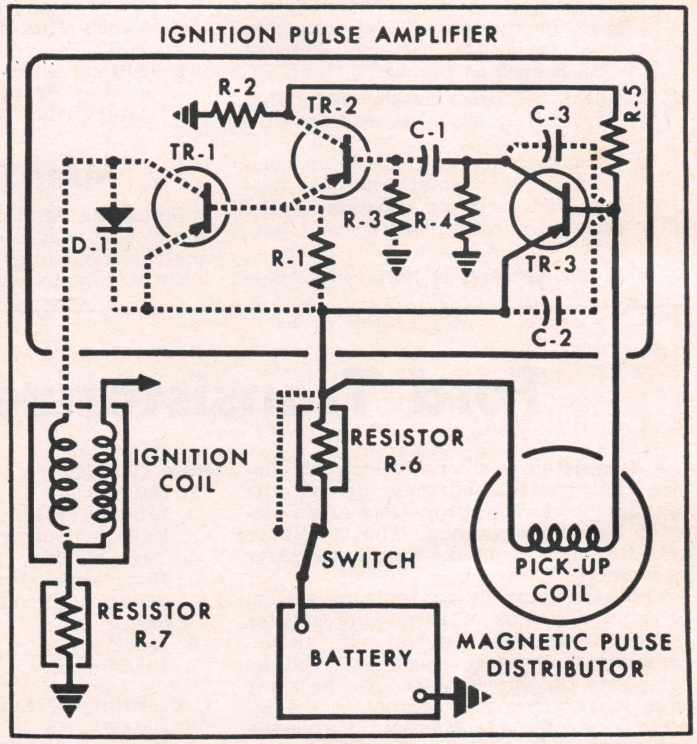

Fig. DR6 Wiring diagram showing current flow in solid lines when spark plug fires

ground. Also, remove the distributor cap so the rotor and inside of the cap can be checked for cracks and carbonized paths.

Distributor—The pick-up coil in the distributor may be checked by separating the harness connector and connecting an ohmmeter across the coil. The resistance of the coil should be 300 to 400 ohms. If the reading is infinite (high off scale) the coil is open circuited; if the reading is low the coil is shorted. Remember that the resistance of the coil will increase slightly as the coil temperature rises.

Also, the pick-up coil may be checked for grounds by connecting the ohmmeter from either coil lead to the distributor housing. The reading should be infinite. If it is not the coil is grounded.

The distributor centrifugal and vacuum advance may be tested on a distributor testing machine. However, since this involves removing the distributor, delay this operation until after the remaining circuit checks are covered. Besides, it is not likely that the advance mechanism is the cause of the trouble.

Ignition Coil—The ignition coil primary can be checked for an open condition by connecting an ohmmeter across the two primary terminals. An infinite reading indicates the primary is open. For the engine to run but miss at times, the primary open must be of the intermittent type.

Also, the coil secondary can be checked for an open by connecting an ohmmeter from the high tension center tower to either primary terminal. To obtain a reliable reading, a scale on the ohmmeter having the 20,000 ohm value within, or nearly within, the middle third of the scale must be used. If the reading is infinite, the coil secondary winding is open. *If a coil tester is available, make sure the tester is designed to test this SPECIAL coil.*

Ignition Pulse Amplifier—If all previous checks are satisfactory, and the amplifier is properly grounded, the engine miss is probably caused by a defective ignition pulse amplifier. Replacement of the amplifier will determine if the original amplifier is defective.

Engine Surge

An engine surge condition, of a nature much more severe than that characterized by a lean carburetor mixture, may be due to the two distributor leads being reversed in the connector body, or may be due to an intermittent open in the distributor pick-up coil.

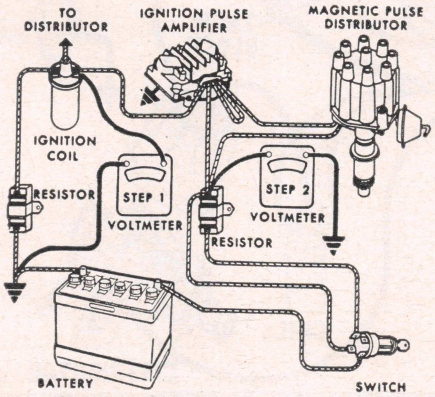

Fig. DR7 Voltmeter connections for circuit checks

The surge condition may result from the action of the vacuum unit causing a break in the distributor pick-up coil wiring to open and close intermittently. To check this, disconnect the vacuum line and observe engine behavior at idle speed.

To complete the checks on the pick-up coil, connect an ohmmeter to the two distributor pick-up coil lead terminals in the connector body. The resistance should be 300 to 400 ohms. If the resistance is infinite the coil is open, and if the resistance is low the coil is shorted.

Also connect the ohmmeter from either terminal to the distributor housing. The reading should be infinite. If not, the winding is grounded.

Engine Will Not Run

If the engine will not run at all, remove the lead from one of the spark plugs and hold it about ¼″ away from the engine block while cranking the engine. If a spark occurs, the trouble most likely is not ignition. If a spark does not occur, check the distributor, wiring and ignition coil as previously described. If these check out correctly, further check the circuit continuity as follows:

1. Connect a voltmeter as shown in Step 1, Fig. DR-7. Observe reading with switch on.
   a. If reading is 8 to 9 volts, check the distributor as outlined above.
   b. If reading is battery voltage, there is an open in the circuit between this point and ground. This circuit consists of coil primary winding, resistor and wiring.

c. If reading is zero, there is an open in the circuit between this point and the battery. Proceed with Step 2 as follows:

2. Connect voltmeter as shown in Step 2, Fig. DR-7. Observe reading with switch on.
   a. If reading is zero there is an open between this point and the battery. This circuit consists of the resistor, ignition switch and battery.
   b. If the reading is battery voltage, there is an open in the circuit between this resistor and ignition coil. This circuit consists of ignition pulse amplifier and the wiring. If the wiring checks satisfactorily, replace the amplifier.

MAINTENANCE

Since the ignition pulse amplifier is completely static, and the distributor shaft and bushings have permanent-type lubrication, no periodic maintenance is required. The distributor lower bushing is lubricated by engine oil through a splash hole in the distributor housing, and a housing cavity next to the upper bushing contains a supply of lubricant which will last between engine overhaul periods. At time of engine overhaul, the upper bushing may be lubricated by removing the plastic seal and then adding SAE 20 oil to the packing in the cavity. A new plastic seal will be required since the old one will be damaged during removal.

Ford Transistorized Ignition System

A transistor is a small electronic device that controls current through the peculiar conductive properties of an element called *germanium*. The transistor gets its name from the words "transfer resistance".

The transistor in an ignition system provides a means of furnishing greater current to the ignition coil with an accompanying greater secondary voltage for firing the spark plugs. At the same time it furnishes less current to the ignition contacts, thereby materially lengthening their life. This is accomplished by means of two inter-related primary ignition circuits whereas the conventional ignition system uses only one such circuit.

The system consists of a base circuit (low voltage trigger circuit), coil primary (collector) circuit (low voltage primary circuit), and a secondary (high voltage coil) circuit. The current will not flow in the primary circuit unless a current is flowing in the base circuit. A very small current in the base circuit allows a much larger current flow in the primary (collector) circuit.

Circuit Components F1, F2, F3

Base Circuit:
1. Battery.
2. Ignition switch.
3. Ballast resistor (.33 ohm).
4. Tach block.
5. Heat sink (toroid, transistor, condenser (40 mfd), and resistor (6 ohm).
6. Resistor.
7. Distributor.

Coil (Primary) Collector Circuit:
1. Battery.
2. Ignition switch.
3. Condenser (2 mfd).
4. Ballast resistor.
5. Tach block.
6. Heat sink (toroid and transistor).
7. Ballast resistor.
8. Coil primary.

Secondary Circuit:
1. Coil secondary.
2. Distributor cap and rotor.
3. Spark plugs.

Glossary

Transistor: A non-vacuum semi-conducting combination of chemical elements used in electrical circuits in place of vacuum tubes.

Zener Diode: A voltage regulating device and two element semi-conductor devices used to control the direction of electrical current flow.

Ballast: A current limiting element. A ballast resistor is a resistor to limit the current and keep it under control.

Tach Block: A block with exposed terminals for test equipment in or to an electrical circuit.

Heat Sink: A device for absorbing heat from electrical units and releasing the heat to the atmosphere to prevent overheating of the electrical units.

Toroid: A small doughnut shaped iron core around which coils of wire are wound similar to a transformer.

Operation

In actual operation, a ½ ampere current flows from the battery through the ignition contacts, the common .33 ohm emitter resistor, the ignition switch and returns to the battery.

This small control current permits the large 12 ampere current to flow from the battery, through the ignition coil, the .43 ohm collector resistor, the toroid, the transistor collector and emitter, the common .33 ohm emitter resistor, the ignition switch and back to the battery. Since this circuit supplies the power to the ignition coil, it is convenient to refer to it as the power circuit, or coil circuit.

During the dwell, when the ignition points are closed, current flows in both circuits. When the points begin to open, the collapsing magnetic field produced in the toroid sends a reverse pulse through the control circuit, stopping all electron flow in the control circuit. Because the control circuit triggers the power circuit, current stops in the power circuit also.

This causes the magnetic field, produced by the coil primary windings, to collapse, sending very high voltage into the secondary circuit to fire the spark plugs. In addition, high voltage is also induced in the primary windings of the power circuit.

This would be sufficient to cause transistor destruction, inasmuch as the induced voltage instantly rises above the load line of the transistor until it reaches the breakdown level of the zener diode. For this reason the condenser is incor-

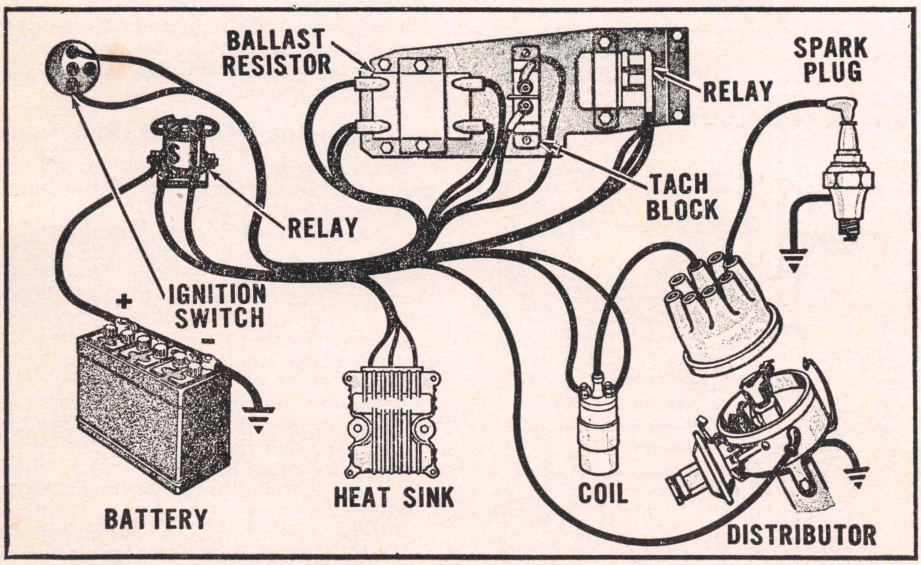

Fig. F1 Ford transistorized ignition system

porated into the power circuit to absorb the high voltage current and keep it within load limits until the zener protection level is reached. Discharge of the condenser voltage from zener level to system voltage takes place by reverse flow through the power circuit, except that the transistor is by-passed by the diode which freely passes this reverse current.

Closing of the ignition points completes the cycle by closing the point circuit again and causing current flow in the power circuit.

Service Recommendations & Specifications

Because of the wide range and usage encountered by the types of vehicles using this ignition system, no set rules for service procedures can be established. However, general recommended procedure for diagnosing suspected ignition trouble in all but the 6-cylinder and dual point vehicles due to power loss is as follows:

1. If dwell is greater than 30 degrees, reset to 24 (plus or minus 1½) degrees.
2. If timing is as much as 4 degrees from specifications, reset to specifications.
3. Points normally need not be adjusted under 20,000 miles. Gap is .019-.021″.
4. Spark plugs may be cleaned and regapped at 50,000 miles although experience indicates that a much greater mileage should be expected. Gap is .028-.032″.
5. Use Chevron O.H.T. cam lubricant only.

Trouble Diagnosis

CAUTION: Discontinue previous underhood short cuts such as the use of jumper wires and grounding devices except those described in the following instructions. The use of these "conventional" diagnostic methods can cause extensive and unnecessary component damage to the transistor system.

1. Determine whether or not there is a spark by disconnecting coil-to-distributor high tension wire from the center terminal of the distributor cap. Turn on ignition and hold the loose end of the wire about ¼″ away from a good ground (clean engine block) while cranking engine. *Note: Engine may be cranked by jumping the ignition switch with a jumper wire from battery terminal to "S" terminal of starting relay after disconnecting the red and blue lead (nearest battery terminal).*
2. A good, strong spark, as measured by conventional standards, indicates satisfactory ignition operation. Reconnect coil high tension lead and test similarly for spark at spark plugs. A good spark at the plugs indicates the trouble to be other than ignition.
3. If the spark is weak or non-existent, remove cover from mounting plate and connect a dwell meter to the tach block (red to red and black to black). With ignition on, crank engine and observe meter reading. A dwell angle of less than 45 degrees indicates that the transistor is functioning properly and that the trouble is not in this component.
4. A dwell meter reading of zero indicates that the breaker points are contaminated or not closing and should be replaced or adjusted.
5. A dwell meter reading of 45 degrees indicates that: a) the ignition is not being supplied with power from ignition switch; b) breaker points are not opening; c) the transistor is malfunctioning. Disconnect bullet connector from distributor lead and again crank engine. A meter reading of zero indicates that the trouble is in the breaker points. A meter reading of 45 degrees indicates power source of transistor trouble. To determine which, connect a voltmeter or test lamp to the red/green lead terminal of the ballast resistor and crank engine. A meter reading of 45 degrees or steady light indicates transistor malfunction. Replace the amplifier assembly (transistor). Absence of any indication on meter indicates an open circuit between battery and transistor.
6. A weak spark in Steps 1 or 2 indicates a weak coil. Turn ignition off, replace with a new coil and repeat Step 1. *Do not attempt to test coil because its low impedence contributes to inaccurate indications.*
7. To jump ignition switch from under hood, disconnect red with green chaser lead from ballast resistor and connect a jumper from positive battery terminal to vacated ballast resistor blade terminal. The transistor ignition system will now be supplied with battery power, providing that the resistor is not open. Check this provision out before proceeding.
8. The only points from which to secure diagnostic information are the tach block terminals ballast resistor terminals and the distributor primary bullet connector. *Do not pierce insulation elsewhere* with sharp probes or pointed objects for a more comprehensive analysis unless all other tests have failed to

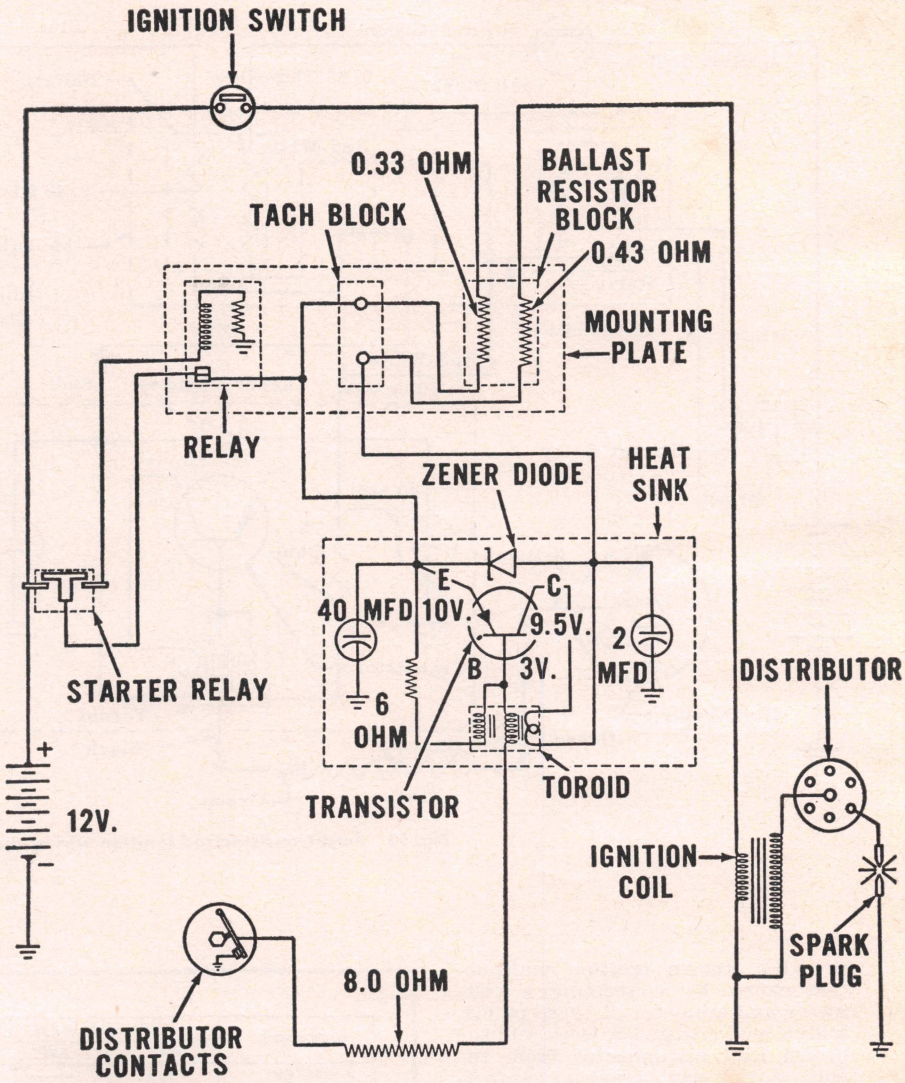

Fig. F2 Ford transistorized ignition circuit

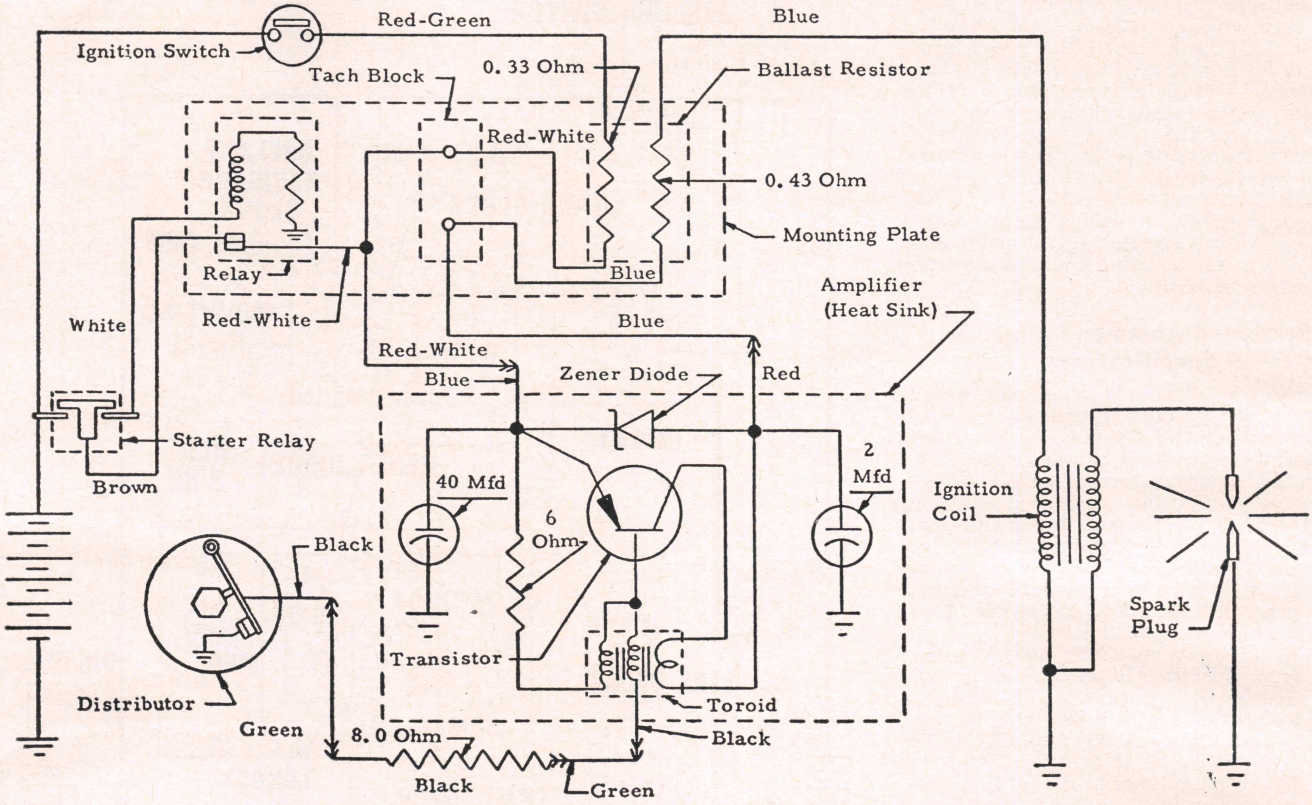

Fig. F3 Ford transistorized ignition wiring diagram

reveal a known ignition malfunction cause. By connecting a voltmeter and ammeter at these points, with a well charged battery and the brown lead disconnected from the cold start relay, cranking amperages and voltages may be obtained which should correspond to the data shown in Fig. F-4.

REFERENCE	CRANKING R.P.M.		IDLE (700 RPM)		NORMAL (1500 R.P.M.)	
	VOLT	AMP	VOLT	AMP	VOLT	AMP
A-BATTERY	10.4	—	13.2	—	14.7	—
B-EMITTER	9.5	4.6	13.0	5.6	14.0	12.5
C-EMITTER	8.0	4.6	11.2	5.6	10.0	12.5
D-COLLECTOR	4.0	4.2	4.6	5.0	9.5	12.0
E-COLLECTOR	2.0	4.2	2.2	5.0	4.5	12.0
F-BASE	4.0	0.4	5.8	0.6	3.5	0.5

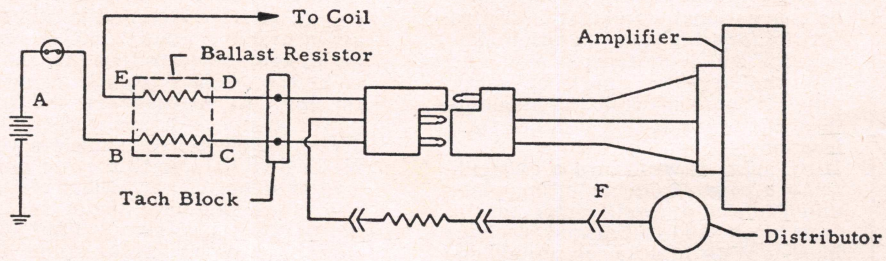

Fig. F4 Cranking amperages and voltages and simplified schematic diagram

GENERATORS & REGULATORS

INDEX

Generator Service

Generator Not Charging 28
Removing Generator 27
Replacing Brushes 28
Replacing With New Generator 29
Polarizing Generator 30
Motoring Generator 30

Regulator Service

Replacing Regulator 31
Electrical Test Service Notes 31
Auto-Lite Electrical Tests 32
Delco-Remy Electrical Tests 34
Ford and Bosch Electrical Tests 32
Auto-Lite Mechanical Adjustments 35
Delco-Remy Mechanical Adjustments 36
Ford and Bosch Mechanical Adjustments ... 36

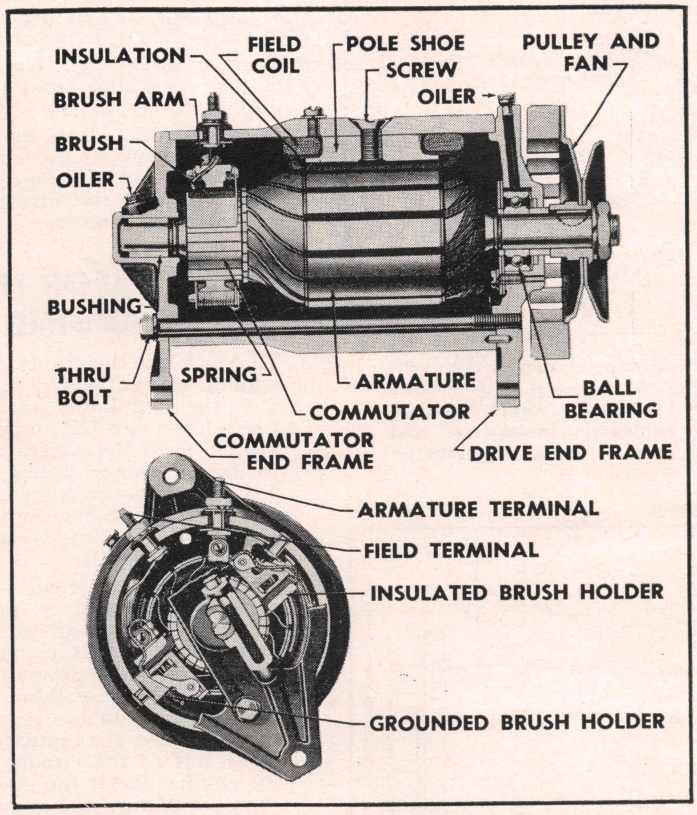

Fig. 1 Details of a typical generator

GENERATOR SERVICE

Removing Generator

Figs. 1 and 2 illustrate a typical generator. The following contains tips on servicing and replacing the generator. To replace the brushes, it is assumed that the generator is to be removed from the engine.

1. Remove the leads from the generator terminals, Fig. 3. Identify each lead in order that it can be replaced to the proper terminal. Note that the condenser (for radio suppression) is always attached to the "A" terminal and never to the "F" terminal.
2. The fan belt must be removed from the generator pulley. On some cars it is necessary to remove the nut holding the belt tension idler pulley in place. With tension loosened, the belt can be removed.
3. Remove the generator by removing the bolts holding the generator lugs to the engine mounting bracket, Fig. 4. On some cars, it is necessary to remove the stud holding the adjusting bracket to generator end frame, Fig. 5. Then loosen the nuts holding the generator to the engine mounting bracket. Move generator toward the engine to release the belt from the pulley. Remove mounting bolts and lift generator from bracket.
4. Some applications have a power steering pump driven by an extended generator shaft, Fig. 6. To remove this type generator, the pump must first be removed from the generator by loosening the two mounting screws. The pump can then be pulled off and the generator removed from the engine as previously described.

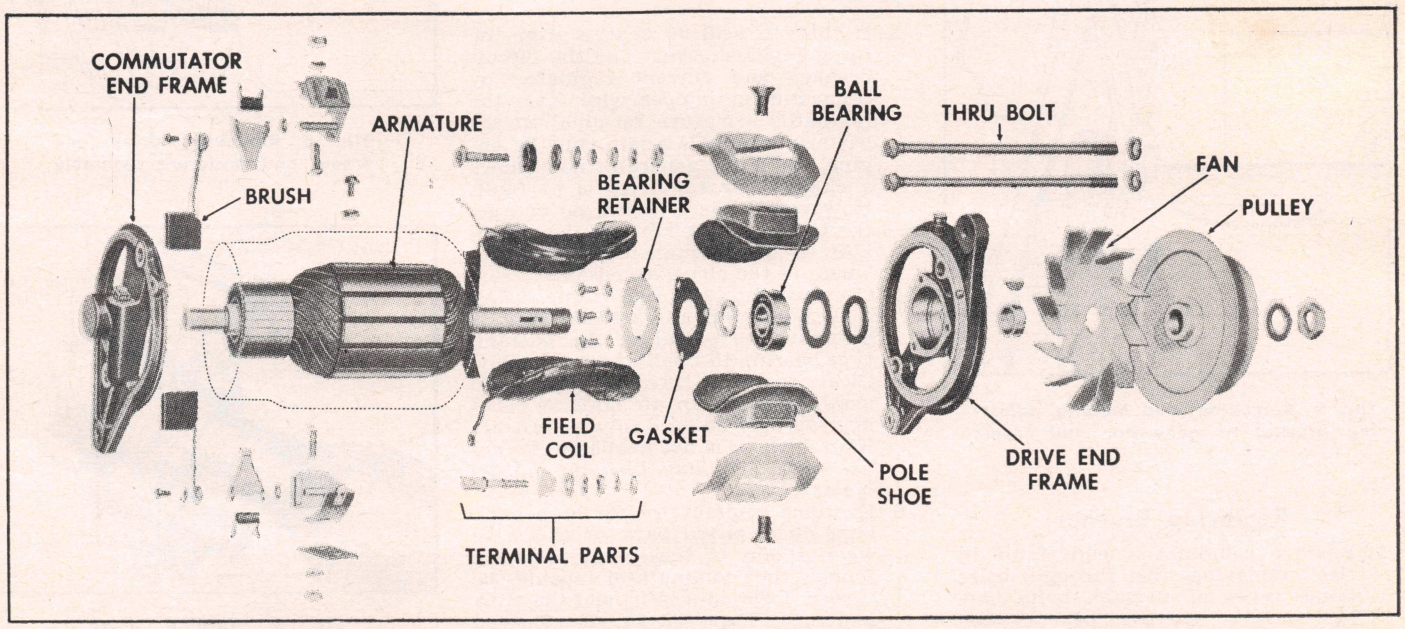

Fig. 2 Exploded view of generator

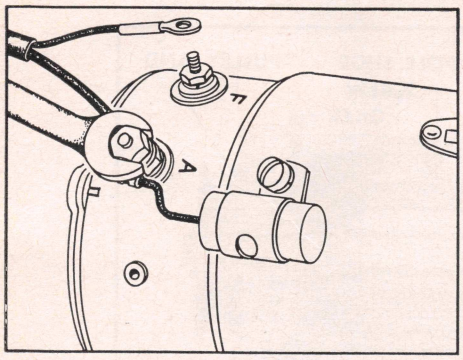

Fig. 3 Note that condenser is attached to the "A" terminal. If connected to the "F" terminal it would make the voltage regulator ineffective and the generator would overcharge

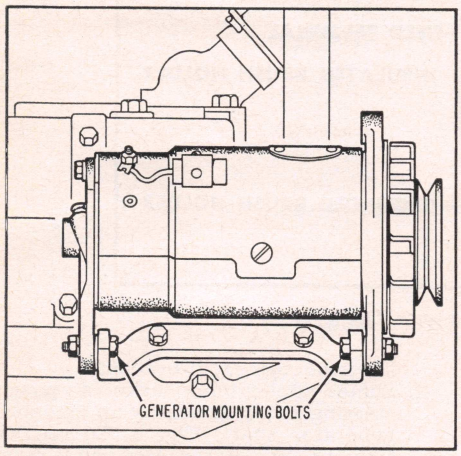

Fig. 4 Typical generator mounting

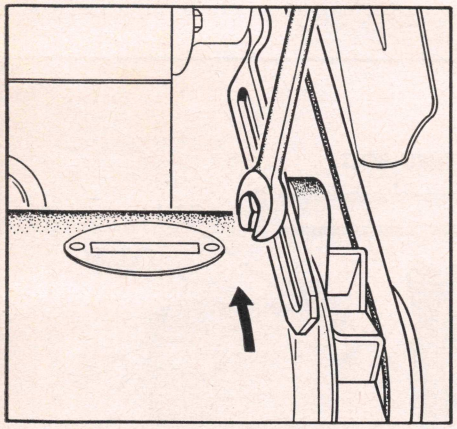

Fig. 5 Removing stud holding adjusting bracket to generator end frame

Replacing Brushes

1. Remove commutator end frame by first removing the through bolts. Some types of through bolts have hex heads whereas others have slotted screw heads. After bolts are removed, it may be necessary to lightly tap the end frame to remove it from the field frame, Fig. 7.
2. Remove drive end frame and armature assembly from field frame, Fig. 8.
3. With a cloth, clean inside of field frame assembly. *Do not dip field coils in any cleaning solvent or puncture field coil insulation during the cleaning process.*

GENERATOR NOT CHARGING

1. To check out the trouble, first make sure all connections at the generator and the regulator are clean and tight. Then run the engine at a fast idle speed. If the generator still fails to show a charge, proceed with Step 2. But if a charge is indicated on the ammeter or if the indicator light goes out, there was a poor connection in the circuit.
2. If the generator field is internally grounded, connect a jumper wire from the regulator armature terminal to the field terminal. If the generator field is grounded externally through the regulator, ground the field terminal to the regulator base. In both cases, the regulator has been taken out of the circuit. Again run the engine, and if the generator now shows a charge the regulator is at fault.

Caution

The foregoing procedure should not be used with double contact voltage regulators. With external ground systems (Delco-Remy), disconnect the field lead and ground it to the regulator base. With internal ground systems, disconnect the field lead and hold it against the armature terminal of the regulator. If this is not done, the lower set of contacts will burn, thereby making the regulator inoperative.

3. If there is still no charge after the foregoing test, short out the circuit breaker and current regulator by connecting a jumper wire from the regulator armature terminal to the battery terminal. Again run the engine, and if the generator now shows a charge, the regulator is at fault. However, if there is still no charge, the trouble is probably in the generator itself, although it may be elsewhere in the charging circuit.
4. Clean commutator end frame, using a cloth dampened in solvent. Place a drop or two of oil in the bushing type bearing to facilitate reassembly.
5. Clean the armature and drive end assembly with an air hose. A clean dry rag may be used to wipe off dirt if an air hose is not available. *Do not use solvent of any kind on the armature.*
6. Examine commutator for high bars, high mica, pitted bars, or excessive wear. If any of these conditions are found, the commutator should be turned down on a lathe and the mica undercut, Figs. 9, 10, 11. Burned bars may indicate a defective ar-

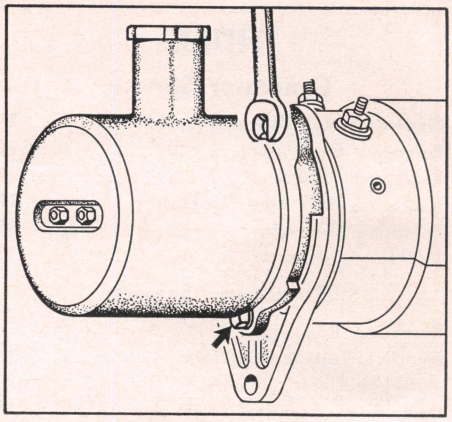

Fig. 6 Removing power steering pump from generator

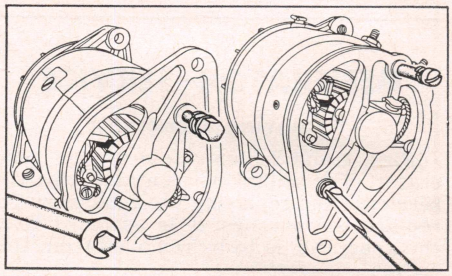

Fig. 7 Removing generator end frame from field frame

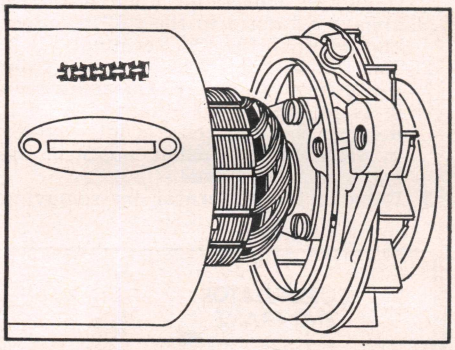

Fig. 8 Removing drive end frame and armature assembly

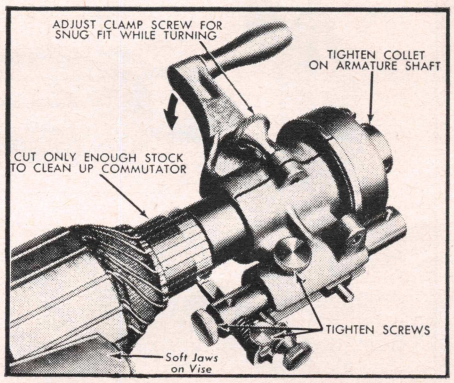

Fig. 9 Turning down commutator with a lathe

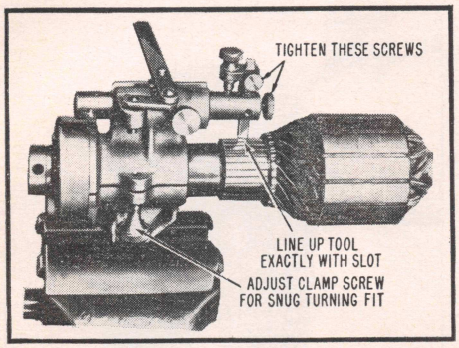

Fig. 10 Undercutting mica insulation. Depth of cut should be 1/32"

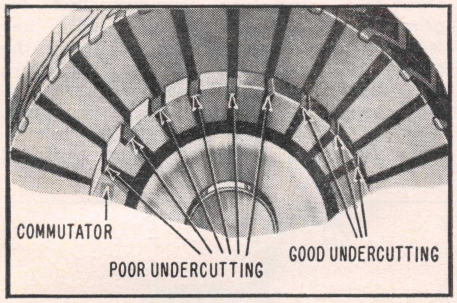

Fig. 11 Examples of proper and improper undercutting

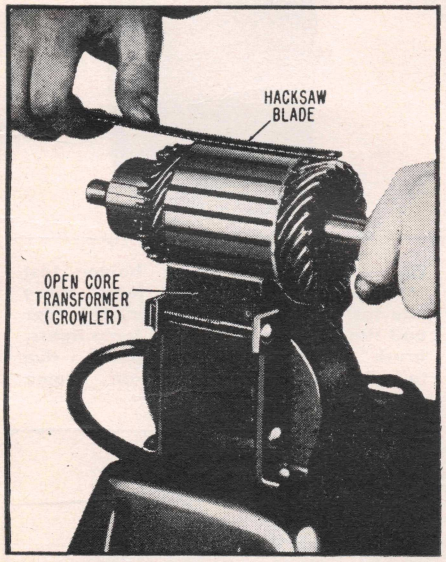

Fig. 12 Testing armature for short circuit. As armature is rotated by hand, steel strip (hacksaw blade) will vibrate if short circuit exists

mature which should be tested and replaced if necessary, Figs. 12, 13, 14.

7. If commutator appears to be in good condition except for dirt or minor corrosion, it may be cleaned with a fine grade of sandpaper. After cleaning, blow out abrasive particles left between commutator bars. *Never use emery cloth for this purpose as particles of emery may become embedded in the commutator bars and cause a short.*
8. Remove brushes from field frame. Wipe off brush holders with a rag dampened in solvent. Any corrosion on the brush bearing surface of the brush holders should be removed to permit freedom of brush movement.
9. If brush holders are mounted on the commutator end frame, remove necessary screws allowing complete removal of brushes.
10. Generators with cover bands need not be disassembled, unless so desired, for brush replacement. First remove the cover band and then remove the screws that attach the flexible brush leads to the brush holders. Then lift up on the brush spring arm and pull out the old brush. A new brush is then pushed down into position in the brush holder. The flexible leads of the brush are then re-fastened to the brush holder. If a field coil lead is present, it also must be fastened to the proper brush holder at this same time.
11. To insert new brushes into the brush holders attached to the field frame, push brush into holder from the bottom and shove it up all the way. This will allow the brush arm to lock the brush up into a position for installation over the commutator. Refasten flexible leads to commutator.
12. When brushes are installed, make sure the pre-formed angle on the brush matches the commutator contour.
13. Generators with brush holders mounted to the commutator end frame of the type shown in Fig. 15, should have their brushes inserted and flexible leads securely fastened in place before reassembling the end frame onto the field frame.
14. On some generators the brushes may be seated as shown in Fig. 16, using No. 00 sandpaper cut as wide as the commutator finished surface. Excessive use of sandpaper should be avoided since it will shorten the brush and decrease its life. Blow off abrasive dust and carbon after completing the seating process.
15. Another method of seating brushes after the generator is reassembled is to spread some brush seating compound on the commutator and then turn the armature by hand for 20 or 30 revolutions. Then blow out the carbon and dust residue left from the brush seating operation.
16. Before reassembling the generator, it may be desirable to check out the field coils and terminals. If so refer to Figs. 17 to 20
17. When reassembling generators, make sure brushes are out of the way when brush assembly is slipped over commutator. In the event brushes are held up by the brush arm, make sure they are seated down on commutator before installing generator on engine.

Replacing With New Generator

1. When exchanging the existing generator with a new or replacement generator, it is necessary to remove

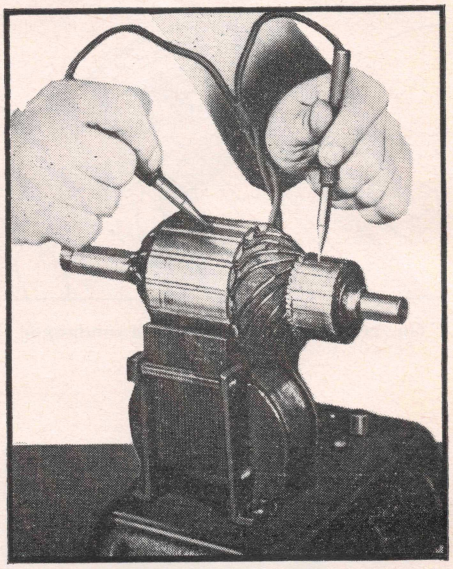

Fig. 13 Armature test for ground. Using test lamp, place test lead on armature core and the other lead on each commutator bar. If lamp lights armature is grounded and must be replaced

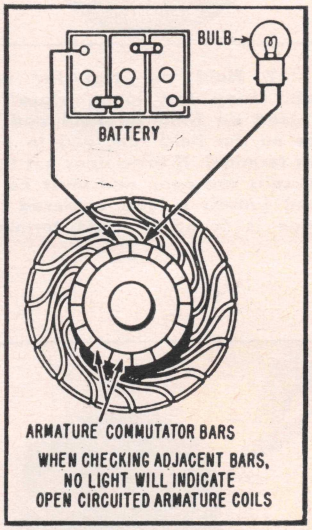

Fig. 14 Armature test for open circuit

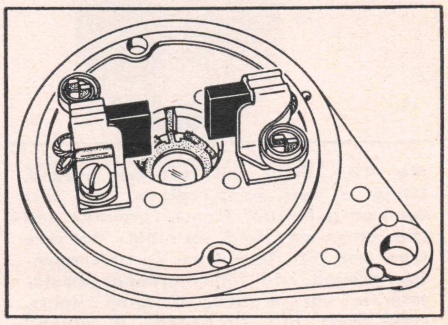

Fig. 15 Brushes mounted to commutator end frame

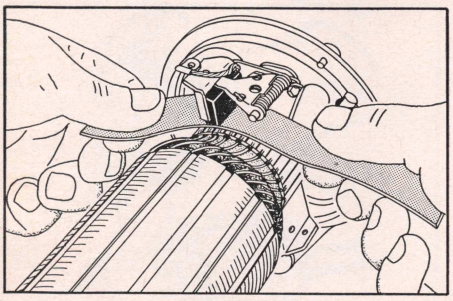

Fig. 16 Seating brushes with sandpaper

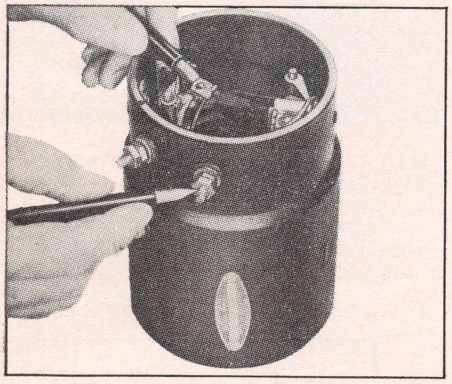

Fig. 17 Field coil test for open circuit. Using test lamp, place one test lead on field terminal and the other on the field coil lead to armature terminal. If lamp does not light, field coils are open and must be replaced (unless a loose soldered connection is found at field terminal)

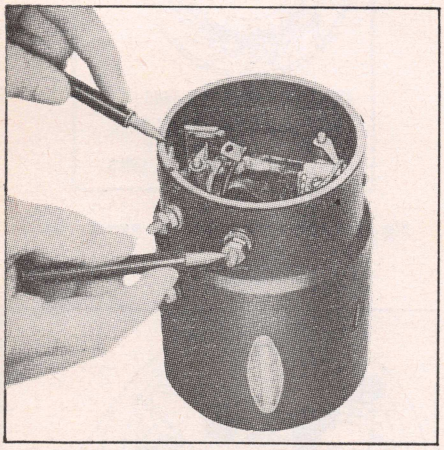

Fig. 18 Field coil test for ground. Using a test lamp, place one test lead on generator frame (ground) and the other on field terminal. Be sure free end of field wire is not touching ground and field terminal insulation is not broken. If lamp lights, field coils are grounded. If ground cannot be located or repaired, field coils must be replaced

the pulley and fan assembly from the old generator for use on the new generator. After the generator has been removed from the engine, it may be possible to remove the pulley nut by holding the pulley armature shaft by a belt, Fig. 21.

2. In the event that the pulley nut cannot be loosened by the belt method, it is necessary to disassemble old generator to remove the pulley, armature and drive end frame assembly. This assembly can then be placed in a vise and the pulley nut removed.
3. A pulley puller is then used to remove the pulley from the armature shaft, Fig. 22. Care should be exercised not to bend or distort either the pulley or fan blades during the removal process.
4. The fan and pulley assembly is then placed over the new generator shaft with the keyway in position over the key. Then lightly tap the pulley and fan assembly down on the shaft until the pulley nut can be started on the threaded end of the shaft.
5. After the generator is assembled and brushes properly seated the generator should be run as a motor, the procedure for which is given below. Mount the generator on the engine and tighten the pulley nut to force the pulley into position against the armature shaft shoulder. Use the vehicle belt as a holding device on the pulley.
6. Apply 8 to 10 drops of light engine oil to the oil cups if present on the generator. Sealed bearings do not require lubrication.

POLARIZING GENERATOR

After the generator is installed on the engine and all leads are connected, the generator must be polarized before starting the engine. The polarizing procedure depends upon whether the field is grounded externally or internally. This data is included in the *Generator and Regulator Specifications* charts in the vehicle chapters. Having determined which system is used, proceed as follows:

If the generator field is externally grounded, Fig. 23, momentarily connect a jumper wire from the "BAT" to the "GEN" or "ARM" terminals of the voltage regulator. Just a touch of the jumper to both terminals is all that is required:

If the generator field is internally grounded, Fig. 24, disconnect the field wire from the regulator and momentarily touch this wire to the regulator "BAT" terminal.

MOTORING GENERATOR

Run the generator as a motor by connecting the ground side of a battery to the generator housing. Connnect the ungrounded side of the battery to the generator armature terminal.

On generators with externally grounded fields, connect a jumper wire from the generator field terminal to the generator frame. For internally grounded units connect a jumper wire from the armature terminal to the field terminal.

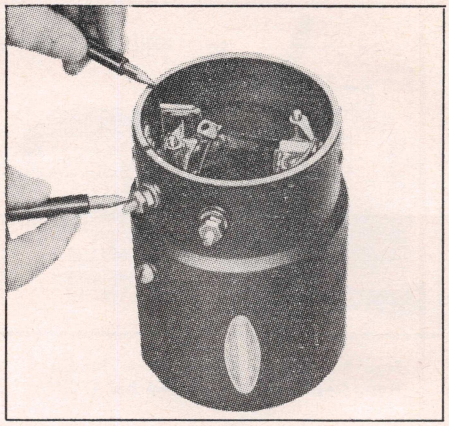

Fig. 19 Armature terminal test for ground. Using a test lamp, place one test lead on armature terminal and the other on generator frame. Be sure loose end of terminal lead is not touching ground. If lamp lights, armature terminal insulation through generator frame is broken down and must be replaced

Fig. 20 Insulated brush holder test for ground. Using a test lamp, place one test lead on insulated brush holder and the other on ground. If lamp lights, brush holder is grounded due to defective insulation on frame

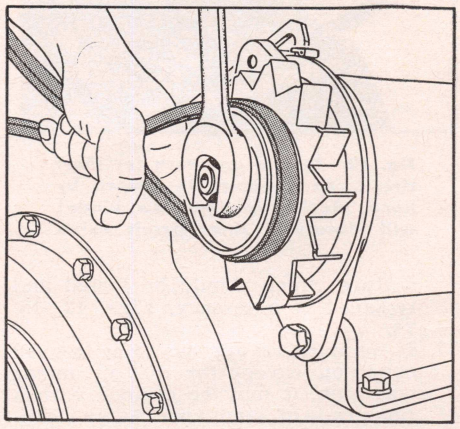

Fig. 21 Holding pulley tight with fan belt while loosening or tightening pulley nut

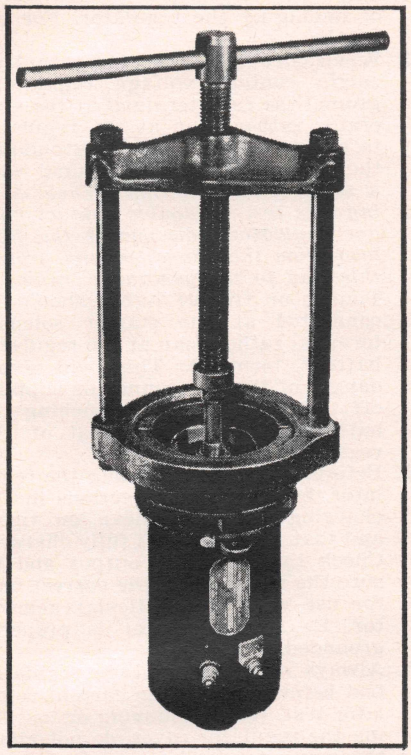

Fig. 22 Using puller to remove pulley

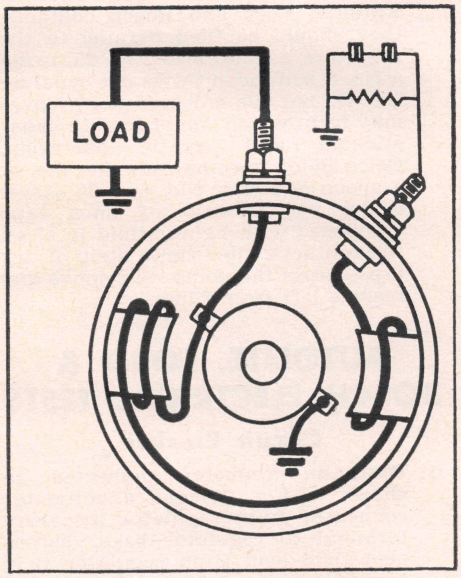

Fig. 23 Wiring diagram of a generator having the field grounded externally through the voltage regulator. This can readily be identified by the fact that the grounded brush has only its own lead connected to it

While motoring, the armature should rotate slowly. If it does not, it may be due to improper bearing fit or alignment, mechanical interference between armature and field coil pole shoes or improper end play. If end play appears excessive, check the tightness of the pulley nut. Make sure that the pole shoe screws are securely tightened. Two or three sharp raps on the generator frame with a rawhide or plastic hammer will often help to free the armature.

VOLTAGE REGULATORS, REPLACE

1. When working on voltage regulators, it is good practice first to remove the battery ground strap or cable from the battery post. This prevents any short circuits or accidental grounds from occurring.
2. To aid in correctly re-wiring to the replacement regulator, identify the wires in some manner that will aid in proper installation.
3. Remove lead or leads connected to the battery terminal of the regulator.
4. Remove lead or leads connected to the armature terminal of the regulator. This terminal is marked "GEN" on Delco-Remy units, and "A" or "ARM" on Autolite, Ford and Bosch units. *If a condenser is present, note that it must be connected to the armature terminal only.*
5. Some regulators have a fuse connected to the regulator battery terminal. This fuse should be removed for use with the replacement regulator. Before installing the fuse, however, it should be tested for continuity with a test lamp. This is to make sure the fuse is not defective or "blown" which would result in an open circuit.
6. After the new regulator has been installed in position, scrape all lead connections or terminals clean to provide a good metal-to-metal contact when re-connected to the regulator terminals.
7. After all leads are connected and before the engine is started, the generator must be polarized as outlined previously.

ELECTRICAL TESTS ON REGULATORS

Service Notes

1. Do not attempt to adjust regulators unless its operation is thoroughly understood and accurate meters are available. Even a slight error in the setting of the unit may cause improper functioning, resulting in a run-down or overcharged battery, or damage to the generator or regulator.
2. When electrical tests are made at the regulator terminals, there is great danger of short circuiting the regulator and burning the contact reeds on Autolite units. Whenever possible it is better to connect test apparatus where there is no danger

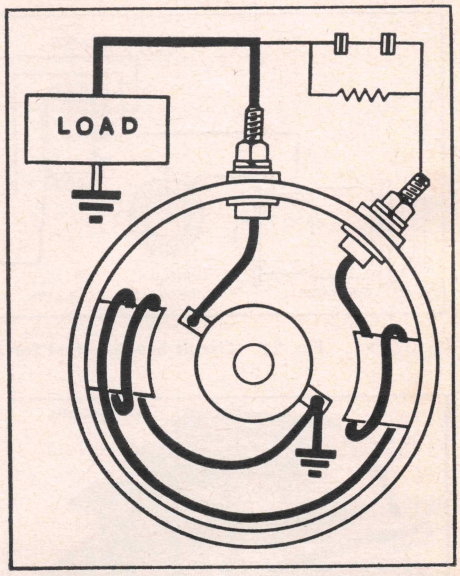

Fig. 24 Wiring diagram of a generator having the field grounded internally through the grounded brush. This can readily be identified by the fact that the grounded brush has both its own lead and the field lead connected to it

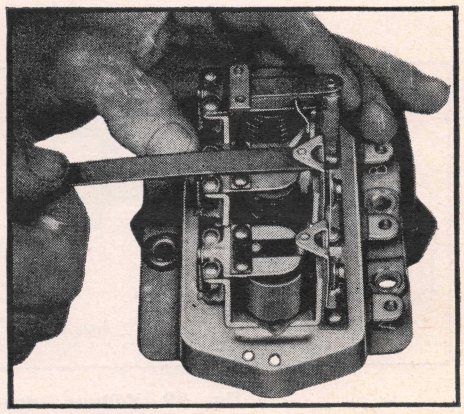

Fig. 25 Auto-Lite, Ford and Bosch regulator contacts should be filed parallel with length of armature

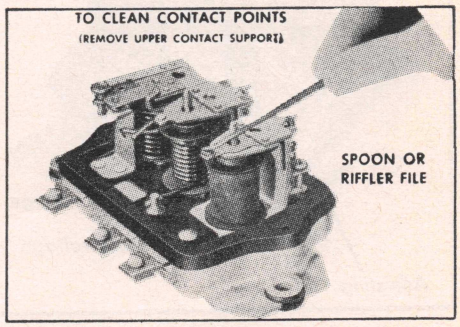

Fig. 26 Cleaning Delco-Remy regulator contact points

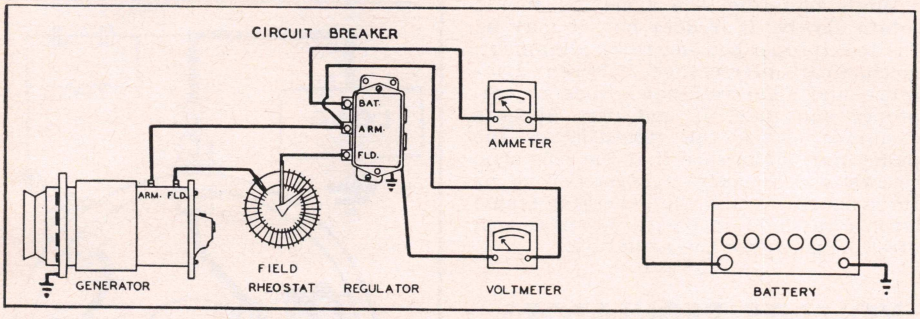

Fig. 27 Circuit breaker test for Auto-Lite, Ford and Bosch regulators

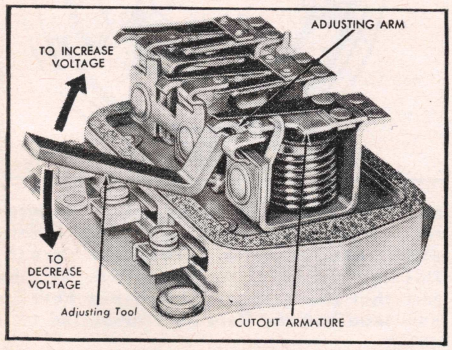

Fig. 28 Adjusting circuit breaker closing voltage on Ford and Bosch regulators

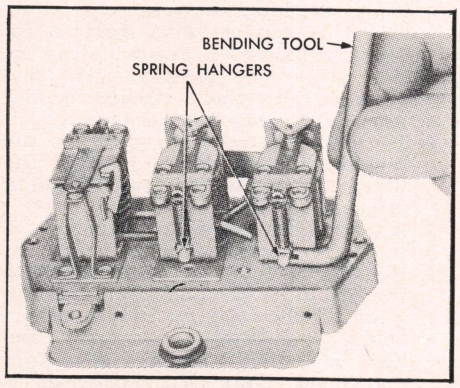

Fig. 29A Adjusting armature spring tension for Auto-Lite voltage and current settings

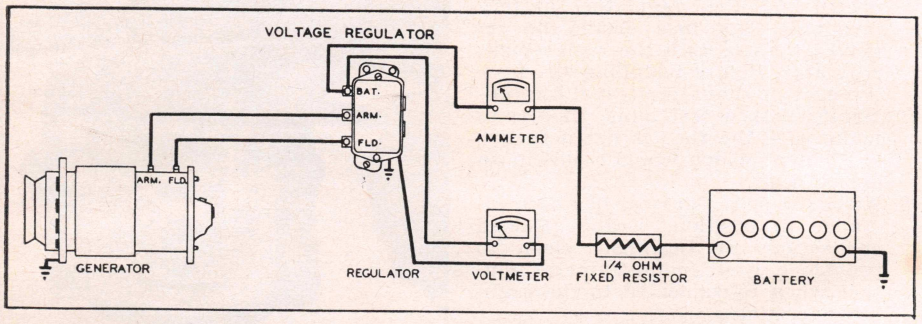

Fig. 29 Voltage regulator test on Auto-Lite, Ford and Bosch single contact voltage regulators

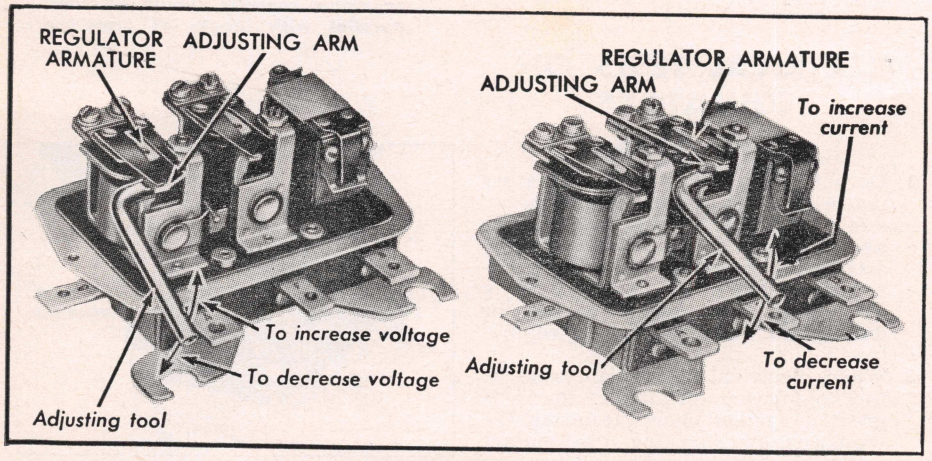

Fig. 30 Adjusting voltage regulator (left) and current regulator (right) on Ford and Bosch regulators

of damaging the regulator. For example:

3. When checking generator output on single contact voltage regulators, ground the field terminal at the generator rather than at the regulator to avoid the possibility of grounding the regulator battery terminal with a screwdriver. *Caution: When making this test on double contact voltage regulators, disconnect the field lead from the generator and ground this lead to the generator frame.*
4. Timing or trouble lights should be connected at the starter solenoid terminal rather than at the regulator battery terminal. This will avoid danger of the clip connector slipping off and simultaneously touching the battery and field terminal of the regulator.
5. Before testing or adjusting the regulator, be sure all connections in the charging circuit are clean and tight, and that the battery is fully charged. Check the generator output and be sure the regulator is the correct unit for use with the particular generator. Be sure regulator is properly grounded.
6. Always make the voltage regulator test before making the current regulator test. When removing or installing the regulator cover, do not allow the cover to touch regulator parts, as this might cause a short circuit and damage the unit.
7. Before starting the tests make sure the contacts are clean and not rough or pitted. If this is not done, subsequent tests will only produce erratic meter indications. When cleaning Autolite, Ford and Bosch contacts, they should be filed parallel to the armature as shown in Fig. 25, using a No. 6 American Swiss cut equaling file. Do not file crosswise as grooves may form which would tend to cause sticking and erratic operation. Delco-Remy recommends the use of a spoon or riffler file, Fig. 26. After filing, use a strip of linen tape dampened with lighter fluid to clean the contacts; then run a strip of dry tape across the points to remove any residue left from filing.

AUTOLITE, FORD & BOSCH ELECTRICAL TESTS

Circuit Breaker

1. With an ammeter connected as shown in Fig. 27, and a voltmeter connected from regulator armature terminal to regulator base, disconnect field lead from regulator field terminal and insert a variable resistance between field lead and its terminal.
2. Run engine at about 800 rpm. Turn variable resistance to the "all in" position. Then slowly reduce the resistance, noting the voltage reading just as the circuit breaker closes. The voltmeter will give a sharp fluctuation at that point and usually a slight click can be heard as the contacts close.
3. On Autolite units, if the closing voltage is not within specifications,

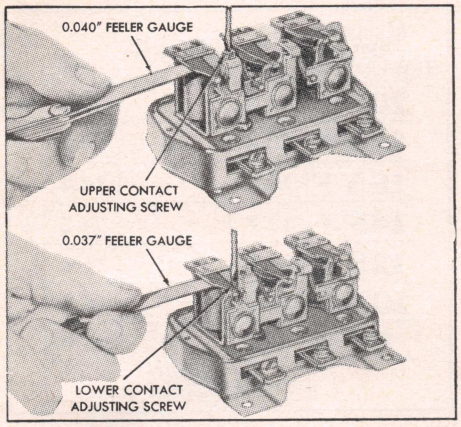

Fig. 31 Adjusting Ford and Bosch double contact voltage regulator

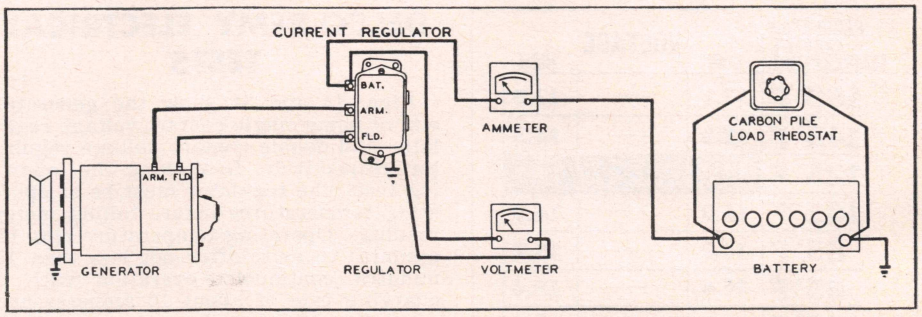

Fig. 32 Current regulator test on Auto-Lite, Ford and Bosch regulators

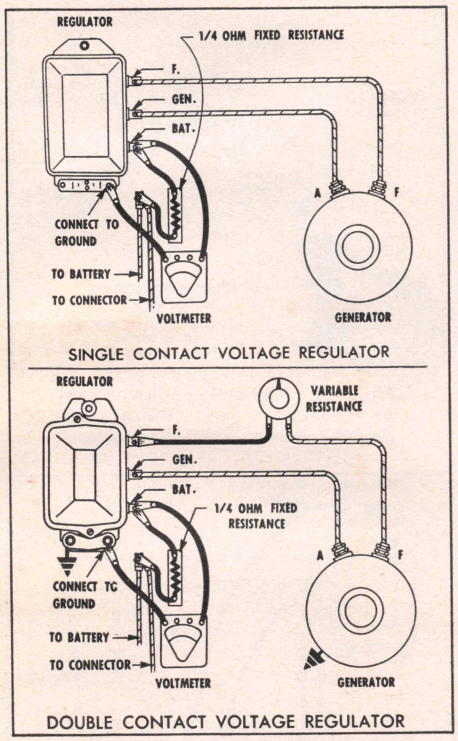

Fig. 35 Checking Delco-Remy voltage regulator setting

remove the regulator cover and change the armature spring tension by bending the lower spring hanger. Bending the spring hanger down increases spring tension and raises the voltage, and vice versa.

4. If closing voltage is not within specifications on Ford and Bosch units, bend the adjusting arm upward to increase voltage, and vice versa, Fig. 28.

Single Contact Voltage Regulator

1. Leave the ammeter connected as shown and move the voltmeter clip from the regulator armature terminal to the regulator battery terminal, Fig. 29.
2. Disconnect the variable resistance from the regulator field terminal and reconnect the field lead. Then insert a ¼ ohm fixed resistor in series with the ammeter.
3. Increase engine speed to obtain about a 7 ampere charge and operate for about 15 minutes with regulator cover in place.
4. Stop and restart the engine to cycle the generator; then note voltage reading. If not within specifications, adjust as follows:
5. On Autolite units, adjust by bending lower spring hanger, Fig. 29A. Bending the hanger down increases spring tension and raises voltage and vice versa.
6. On Ford and Bosch units, increase spring tension by bending adjusting arm upward to raise voltage and vice versa, Fig. 30.
7. Be sure to stop and restart engine and replace cover after each setting before taking voltage readings.

Ford & Bosch Double Contact Voltage Regulator

If proper voltage cannot be obtained by bending the spring hanger as directed for single contact voltage regulators, further adjustments are required as follows:

1. Disconnect ground terminal from battery.
2. Remove regulator from vehicle and take off cover.
3. Turn upper contact screw in or out to obtain a .040" gap between armature core and armature, Fig. 31.
4. Turn lower contact screw in or out to obtain a .037" gap between armature core and armature. While making adjustments, hold contact points together by pressing downward on screwdriver.

Current Regulator

1. Meters are connected as for the voltage regulator test except that the fixed resistor is removed and a carbon pile rheostat is connected across the battery as shown in Fig. 32 to allow full output. An alternate method for allowing the current regulator to operate is to operate the starting motor for 15 or 20 seconds cranking the engine and turning on lights and accessories.
2. Operate engine at about 1800 rpm. Using the carbon pile, increase the load to lower the regulated system voltage approximately one volt and allow the current regulator to operate.

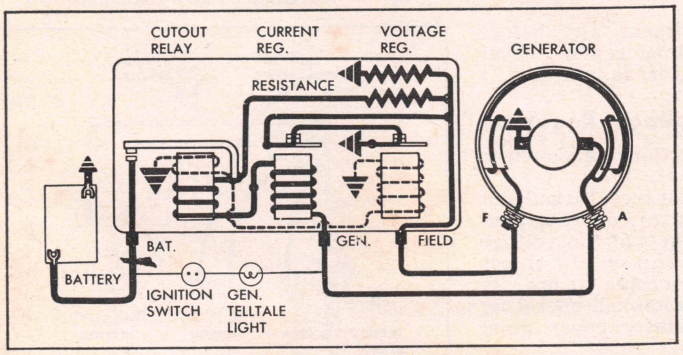

Fig. 33 Delco-Remy charging circuit with single contact voltage regulator

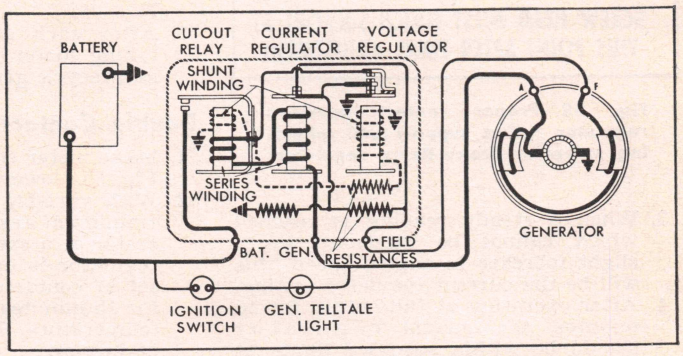

Fig. 34 Delco-Remy charging circuit with double contact voltage regulator

REGULATOR AMBIENT TEMPERATURE	VOLTAGE LOW		VOLTAGE HIGH
165° F	13.1	—	13.9
145° F	13.5	—	14.3
125° F	13.8	—	14.7
105° F	14.0	—	14.9
85° F	14.2	—	15.2
65° F	14.4	—	15.4
45° F	14.5	—	15.6

NORMAL SPECIFICATION RANGE
■ INDICATES PUBLISHED SPECIFICATIONS

Fig. 36 Delco-Remy single contact regulator temperature and voltage factors

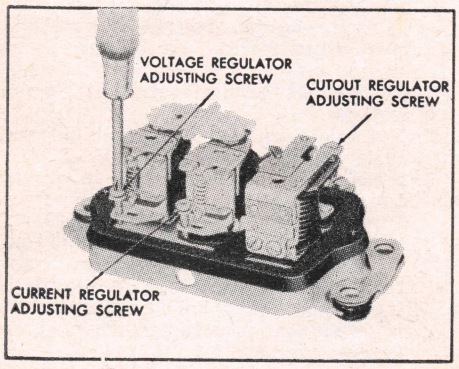

Fig. 37 Delco-Remy regulator adjusting screws

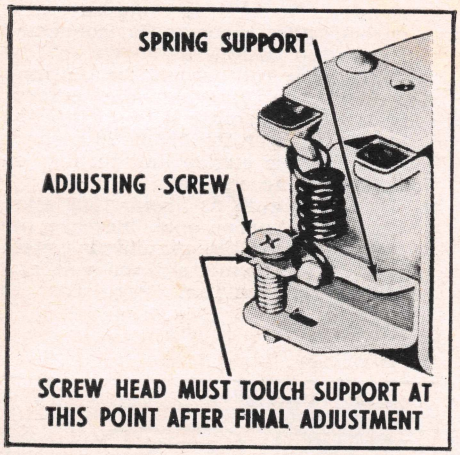

Fig. 38 Proper contact between regulator spring support and adjusting screw on Delco-Remy regulators

3. When a steady reading is reached which cannot be increased by a slight increase in engine speed, this will be the current regulator setting.
4. After operating at full output for 15 minutes, the current regulator should be within specified limits at operating temperature.
5. Adjustment is made in the same manner as for the voltage regulator.

DELCO-REMY ELECTRICAL TESTS

Figs. 33 and 34 show the generator circuit using single contact voltage regulator and double contact voltage regulator, respectively. In making the following tests, the regulator must be at operating temperatures before taking meter readings. Operating temperature may be assumed to exist after not less than 15 minutes continuous operation with a charging rate of about 10 amperes and regulator cover in place.

CAUTION: With charging circuits having the double contact voltage regulator, Fig. 34, it is extremely important never to ground the field terminal of the generator or regulator when these units are connected or operating together. To do so will burn up the upper set of voltage regulator contacts.

For best results, the electrical tests must be made in the order given below.

Single Contact Voltage Regulator

1. Make meter connections as shown in Fig. 35 (upper view), and operate the engine at about 1600 rpm for 15 minutes with the ¼ ohm resistor in the circuit and cover in place to bring the regulator to operating temperature.
2. Cycle the generator by stopping the engine, then restarting and bringing generator speed back to 1600 engine rpm.
3. Note voltmeter reading and ambient temperature (temperature of air surrounding regulator ¼″ from cover). The voltage reading represents setting at ambient temperature. As shown in Fig. 36, setting will be different at other ambient temperatures. *If method of measuring ambient temperature is not available it may be assumed to be 40 degrees above room temperature.*
4. To adjust voltage setting, remove regulator cover and turn voltage regulator adjusting screw. Fig. 37. Turn screw clockwise to increase spring tension and raise voltage, and vice versa. *Final adjustment should always be made by turning screw clockwise to assure contact between screw head and spring support, Fig. 38.*
5. After each adjustment and before taking meter reading, replace cover and recycle generator, as in Step 2.

Double Contact Voltage Regulator

1. Make meter connections as shown in Fig. 35 (lower view).
2. With variable resistance turned out (minimum resistance), operate generator at a speed so that the voltage regulator is operating on the upper set of contacts. Continue to operate for 15 minutes to establish operating temperature. Regulator cover must be in place.
3. Cycle generator by turning variable resistance to the "open" position momentarily, then slowly decrease

REGULATOR AMBIENT TEMPERATURE	VOLTAGE LOW		VOLTAGE HIGH
205° F	13.3	—	14.1
185° F	13.4	—	14.2
165° F	13.5	—	14.4
145° F	13.7	—	14.5
125° F	13.8	—	14.6
105° F	14.0	—	14.8
85° F	14.1	—	14.9

NORMAL SPECIFICATION RANGE

Fig. 39 Delco-Remy double contact regulator temperature and voltage factors

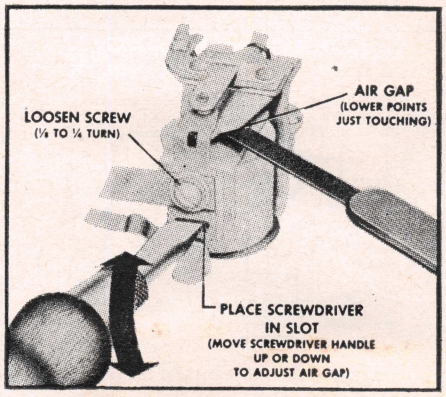

Fig. 40 Adjusting lower set of contacts on Delco-Remy double contact voltage regulator

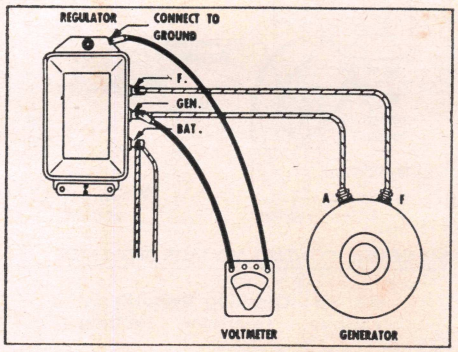

Fig. 41 Delco-Remy circuit breaker test

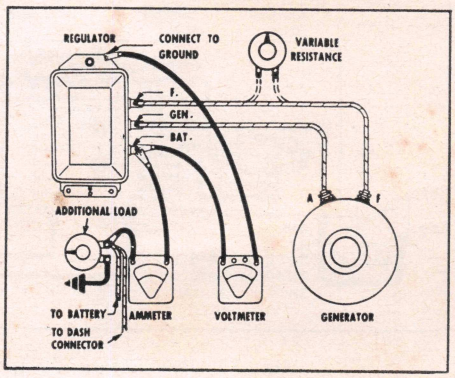

Fig. 42 Delco-Remy current regulator test

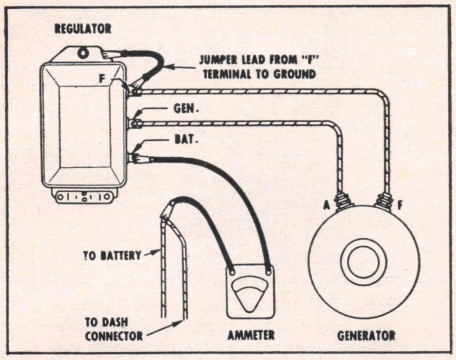

Fig. 43 Checking for oxidized regulator contact points. On double contact regulators do not use jumper wire as shown; instead remove lead from "F" terminal and ground this lead

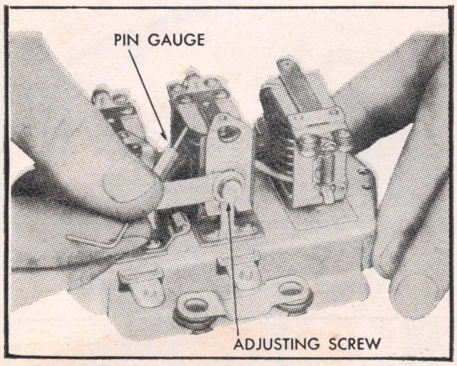

Fig. 44 Checking air gaps on Auto-Lite regulators

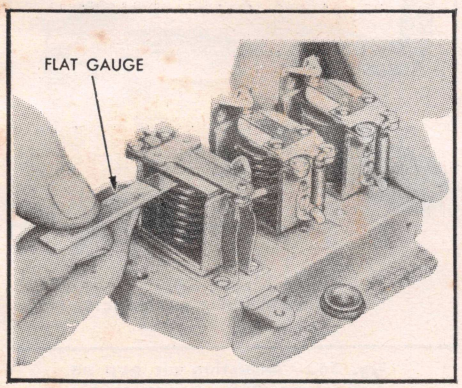

Fig. 45 Checking air gap on Auto-Lite circuit breaker

(turn out all) resistance. Regulator should again be operating on the upper set of contacts.

4. Note voltmeter reading and ambient temperature, and see Fig. 39 for correction factors.
5. Increase (turn in) resistance slowly until voltage regulator begins to operate on the lower set of contacts. The lower set should operate at a lower voltage than the upper set of contacts.
6. To adjust voltage setting on upper set of contacts, do so in the same manner as directed for single contact voltage regulators above.
7. For the lower set of contacts, the difference in voltage between the upper set and lower set is increased by *slightly* increasing the air gap between the armature and center of core and decreased by *slightly* decreasing the air gap, Fig. 40. This adjustment is made while the regulator is operating. If necessary to make this adjustment, recheck the voltage setting of both sets of contacts.

Circuit Breaker Closing Voltage

1. Make connections as shown in Fig. 41.
2. Check closing voltage by slowly increasing generator speed and noting voltage at which points close. Decrease generator speed and make sure points open.
3. If not as specified, adjust voltage by turning adjusting screw clockwise to increase voltage and vice versa (see Fig. 37).

Current Regulator

1. Before making connections shown in Fig. 42, disconnect battery ground lead. After completing the hook-up, reconnect battery lead.
2. Turn on all lights and accessories and connect an additional load across the battery, such as a carbon pile or bank of lights, so as to drop the system voltage to 12.5-13.0 volts.
3. Operate generator at 1600 engine rpm for at least 15 minutes with cover in place to establish operating temperature.
4. Cycle the generator as previously directed and note current regulator setting.
5. Adjustment is made in the same manner as outlined for single contact voltage regulators (see Fig. 37).

Check For Oxidized Contacts

1. Oxidized contacts may be the cause of low generator output or a discharged battery. To check for this condition, connect an ammeter into the circuit as shown in Fig. 43, and turn on headlights.
2. Operate generator at a speed that will produce a charge rate of 5 amperes.
3. Ground the "F" terminal of regulator as shown. *Caution: On double contact regulators, remove lead from "F" terminal and ground this lead.*
4. If generator output increases more than 2 amperes, oxidized contact points are indicated. Remove regulator from vehicle and clean points.

AUTOLITE MECHANICAL ADJUSTMENTS

Current & Voltage Regulator Air Gaps

1. Use a pin type gauge which measures .048-.052". Insert gauge on point side of air gap and next to armature stop pin with contact points just separating, Fig. 44.
2. If an adjustment is necessary, loosen bracket screws and raise or lower

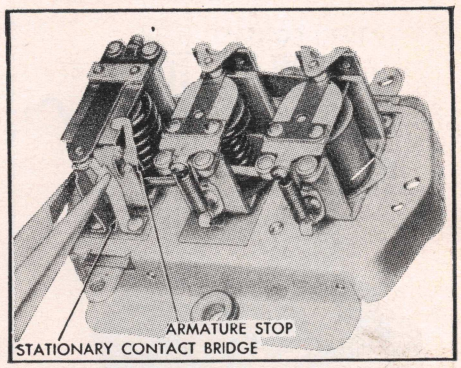

Fig. 46 Adjusting air gap on Auto-Lite circuit breaker

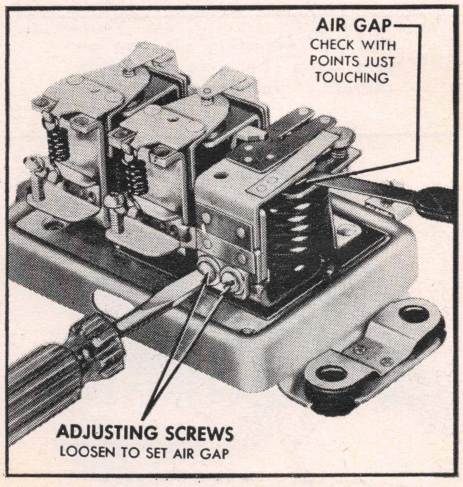

Fig. 47 Adjusting air gap on Delco-Remy circuit breaker

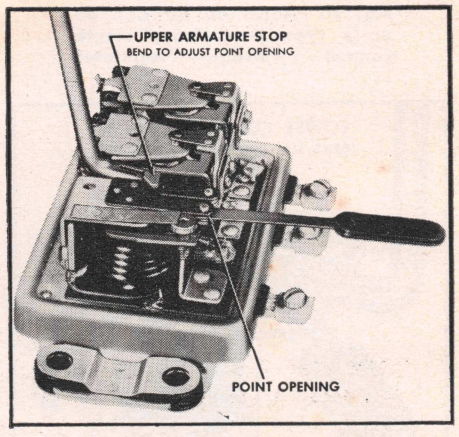

Fig. 48 Adjusting point opening on Delco-Remy circuit breaker

contact point brackets until the foregoing clearance is obtained. Tighten screws securely after adjustment.

3. With armature held down so that stop rivet rests on magnet core, the point gap should be .015" when checked with a feeler gauge.

Circuit Breaker Air Gap

1. As shown in Fig. 45, use a flat gauge which measures from .031-.034". In-

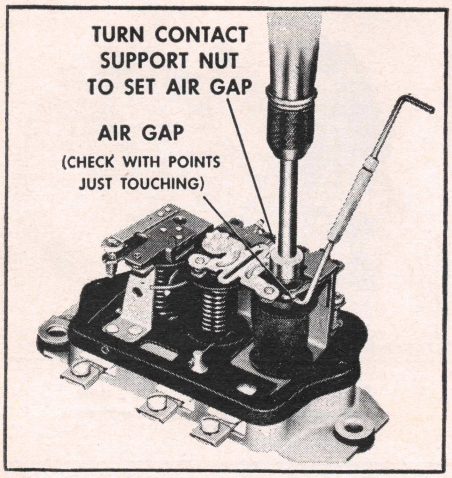

Fig. 49 Adjusting air gap on late type Delco-Remy single contact voltage regulator

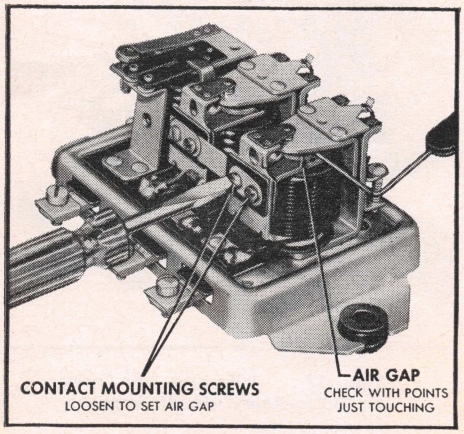

Fig. 50 Adjusting air gap on early type Delco-Remy single contact voltage regulator

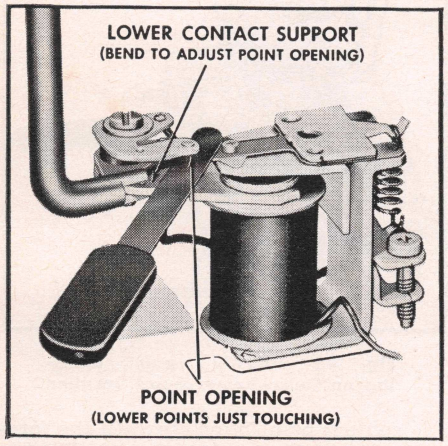

Fig. 51 Adjusting point opening on early type Delco-Remy double contact voltage regulator

sert gauge between armature and magnet core. Place gauge as near to hinge as possible.

2. To adjust, bend armature stop, Fig. 46, so that space between core and armature is within the foregoing limits. The stop must not interfere with armature movement.
3. Adjust the contact gap to .015″ by expanding or contracting the stationary contact bridge, Fig. 46. When making this adjustment, keep the contact points in alignment.

DELCO-REMY MECHANICAL ADJUSTMENTS

Circuit Breaker Air Gap & Point Opening

1. Place fingers on armature directly above core and move armature down until points *just* close. Then measure air gap between armature and center core, Fig. 47. Air gap should be .020″.
2. Check to see that both points close simultaneously. If not, bend spring finger so that they do.
3. To adjust air gap, loosen two screws at back of circuit breaker and raise or lower armature as required. Tighten screws securely after adjustment.
4. Check point opening with feeler gauge as shown in Fig. 48 and adjust to .020″ by bending upper armature stop.
5. After both adjustments have been made, recheck closing voltage and make any necessary adjustments.

Voltage Regulator Air Gap On Single Contact Units

1. Referring to Fig. 49, push armature down to core and release it until contact points *just* touch. Then measure air gap with pin gauge between armature and center of core. Air gap should be .075″.
2. On late units, adjust gap by turning nylon nut on top of regulator as shown. On earlier units, adjust as shown in Fig. 50.
3. After making adjustment, recheck voltage setting and make necessary adjustments.

Voltage Regulator Air Gap & Point Opening On Double Contact Units

Point Opening

1. With lower contacts touching, measuse point opening between upper set of contacts. The opening should be .016″.
2. On early units, adjust as shown in Fig. 51. On late units, adjust as shown in Fig. 52.

Air Gap

1. On late units, Fig. 53, with lower contacts touching, measure air gap and adjust as shown.
2. On early units, first make sure adjusting screw on top of armature is turned all the way in a clockwise direction. Then check and adjust the gap as shown in Fig. 54.

Current Regulator Air Gap

Check and adjust current regulator air gap in exactly the same manner as the single contact voltage regulator. Air gap should be .075″. After making the adjustment, recheck current setting and adjust as required.

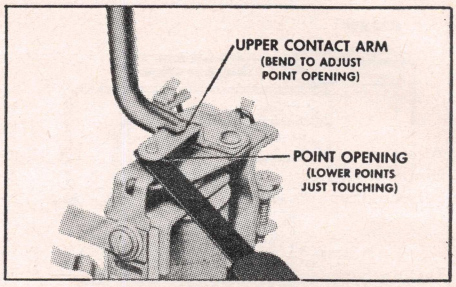

Fig. 52 Adjusting point opening on late type Delco-Remy double contact voltage regulator

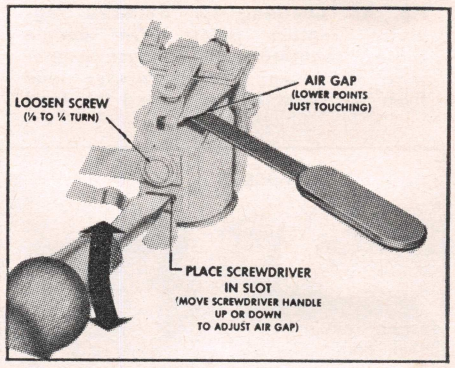

Fig. 53 Adjusting air gap on late type Delco-Remy double contact voltage regulator

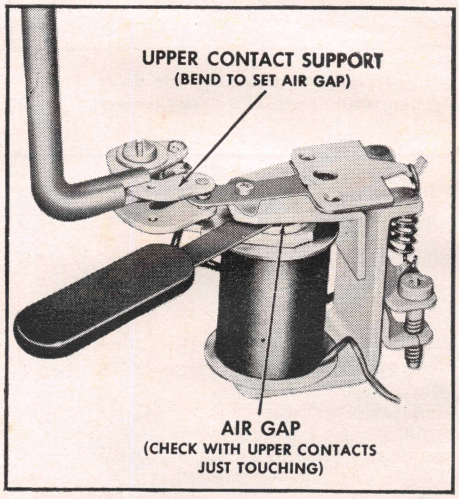

Fig. 54 Adjusting air gap on early type Delco-Remy double contact voltage regulator

FORD & BOSCH MECHANICAL ADJUSTMENTS

No mechanical adjustments are provided on these regulators as they are of riveted construction. However, on double contact regulators, the upper and lower voltage regulator contact sets are provided with an adjustment. See text in connection with Fig. 31.

ALTERNATORS

INDEX

Introduction

Alternator Components 37
Diode Rectifiers 37
Service Precautions 37

Chrysler

Testing System In Vehicle 37
Bench Tests 39
Alternator Repairs 39
Testing Rectifiers (See Prestolite) 63

Delco-Remy "Delcotron"

Testing System In Vehicle 42
Bench Tests 44
Alternator Repairs 46
Regulator Adjustments 48

Ford

Testing System In Vehicle 53
Regulator Tests 54
Regulator Adjustments 55
Alternator Repairs 55

Leece-Neville

Testing System In Vehicle 59
Bench Tests 59
Alternator Repairs 60
Testing Rectifiers 60
Regulator, Adjust 60

Prestolite

Testing System In Vehicle 60
Bench Tests 62
Alternator Repairs 62
Testing Rectifiers 63

INTRODUCTION

Alternators under discussion here are of the modern type with built-in silicon diode rectifiers. Under normal operating conditions, these alternators have a rating of 30 to 60 amperes, depending upon the requirements of the vehicle, and usually deliver 5 to 10 amperes at curb idle speed.

Alternators are composed of the same functional parts as the conventional D.C. generator but they operate differently. The field is called a rotor and is the turning portion of the unit. A generating part, called a stator, is the stationary member, comparable to the armature in a D.C. generator. The regulator, similar to those used in a D.C. system, regulates the output of the alternator-rectifier system.

The power source of the system is the alternator. Current is transmitted from the field terminal of the regulator through a slip ring to the field coil and back to ground through another slip ring. The strength of the field regulates the output of the alternating current. This alternating current is then transmitted from the alternator to the rectifier where it is converted to direct current.

These alternators employ a three-phase stator winding in which the phase windings are electrically 120 degrees apart. The rotor consists of a field coil encased between interleaved sections producing a magnetic field with alternate north and south poles. By rotating the rotor inside the stator, the alternating current is induced in the stator windings. This alternating current is rectified (changed to D.C.) by silicon diode rectifiers and brought out to the output terminal of the alternator.

Diode Rectifiers

Six silicon diode rectifiers are used and act as electrical one-way valves. Three of the diodes have ground polarity and are pressed or screwed into a heat sink which is grounded. The other three diodes (ungrounded) are pressed or screwed into and insulated from the end head; these diodes are connected to the alternator output terminal.

Since the diodes have a high resistance to the flow of current in one direction and a low resistance in the opposite direction, they may be connected in a manner that allows current to flow from the alternator to the battery in the low resistance direction. The high resistance in the opposite direction prevents the flow of current from the battery to the alternator. Because of this feature no circuit breaker is required between alternator and battery.

SERVICE PRECAUTIONS

1. Be certain that the battery polarity of the system is known so that the battery is connected to the proper ground. *Reversed battery polarity will damage rectifiers and regulator.*
2. If a booster battery is used for starting the vehicle, it must be connected to the vehicle battery properly to prevent damage to rectifiers and regulator. Negative cable from booster battery to negative terminal on vehicle battery, and positive booster cable to positive terminal.
3. When a fast charger is used to charge a vehicle battery used with Auto-Lite and Chrysler systems, the vehicle battery cables should be disconnected *unless the charger is equipped with a special Alternator Protector,* in which case the vehicle battery cables need not be disconnected. Also with Chrysler and Auto-Lite systems the fast charger should never be used to start an engine as damage to rectifiers will result.
4. Lead connections to grounded rectifiers on Auto-Lite and Chrysler units should never be soldered as the excessive heat may damage the rectifiers.
5. Unless the system includes a load relay or field relay, grounding the alternator output terminal will damage the alternator and/or circuits. This is true even when the system is not in operation since no circuit breaker is used and the battery is applied to the alternator output terminal at all times. The field or load relay acts as a circuit breaker in that it is controlled by the ignition switch.
6. When adjusting the voltage regulator, do not short the adjusting tool to the regulator base as the regulator may be damaged. The tool should be insulated by taping or by installing a plastic sleeve.
7. Before making any "on vehicle" tests of alternator or regulator, the battery should be checked and the circuit inspected for faulty wiring or insulation, loose or corroded connections and poor ground circuits.
8. Check alternator belt tension to be sure belt is tight enough to prevent slipping under load.
9. The ignition switch should be off and the battery ground cable disconnected before making any test connections to prevent damage to the system.
10. The vehicle battery must be fully charged or a fully charged battery may be installed for test purposes.

Chrysler Alternators

TESTING THE SYSTEM

Installed In Vehicle

With the battery fully charged and in good condition and engine at normal operating temperature, test the system as follows after first checking the fuse between the regulator and ignition switch. Also see Figs. C1 to C4.

Caution: Never ground the field circuit between the alternator and regulator as this will result in damage to the voltage regulator.

Charging Circuit Resistance Test

1. Remove output lead from alternator battery terminal and connect a D.C. ammeter between the terminal and the disconnected lead.
2. Connect a D.C. voltmeter positive lead to the output lead that was disconnected from the alternator and connect the voltmeter negative lead to the battery positive post.
3. Start the engine and adjust its speed to produce 10 amperes from the alternator. The voltage reading should not exceed .2 volt. If there is a higher voltage drop, clean and

tighten all connections in the charging circuit and recheck. A voltage drop test across each connection will locate any bad connections.

Current Output Test

1. Disconnect field lead at alternator and at regulator.
2. Install a D.C. ammeter in series with the alternator battery terminal and the wire disconnected from the alternator output terminal.
3. Connect a jumper between the battery terminal and the alternator field terminal.
4. Connect a carbon pile rheostat across the battery.
5. Connect a voltmeter positive lead to the alternator battery terminal and ground the voltmeter negative lead to the alternator housing.
6. Install a tachometer, start engine and adjust engine speed to 1250 rpm.
7. Adjust carbon pile to obtain 40 amperes while making tests. Turn off immediately when test is completed. The current output should be as specified in the *Alternator Specifications* table in the vehicle chapter. *If the output is low, the stator or a rectifier is shorted.*
8. Adjust engine speed to 2200 rpm. If output is excessive, a rectifier is open. If output is low a rectifier is shorted.

Voltage Regulator Test

1. Disconnect lead from alternator output terminal. Connect an ammeter between battery terminal and disconnected wire.
2. Connect a D.C. voltmeter positive lead to the alternator battery output terminal and ground the voltmeter negative lead to the alternator housing or regulator base.
3. Start the engine and adjust its speed to 1400 rpm and with ammeter reading 10 amperes by turning on lights, etc. Operate engine for 15 minutes to stabilize temperature (regulator cover in place). Check temperature with a thermometer two inches from regulator cover.

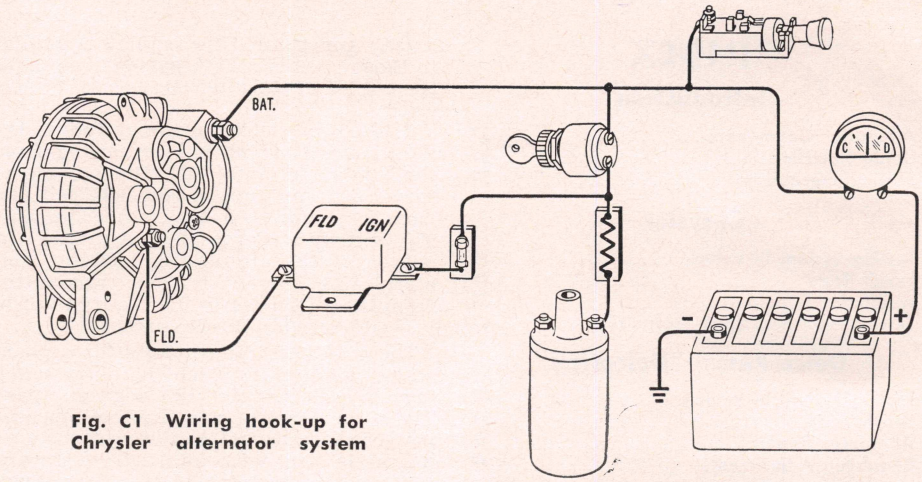

Fig. C1 Wiring hook-up for Chrysler alternator system

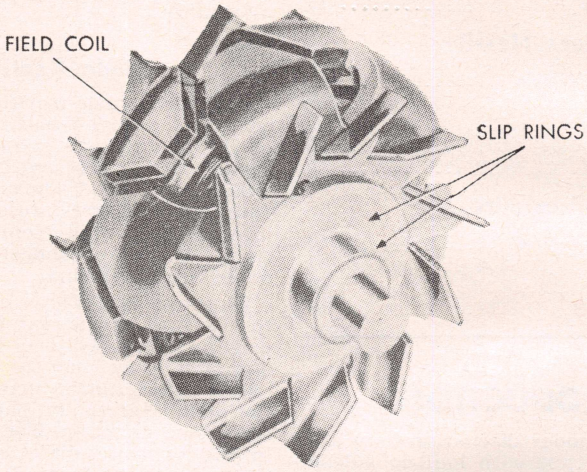

Fig. C4 Rotor assembly

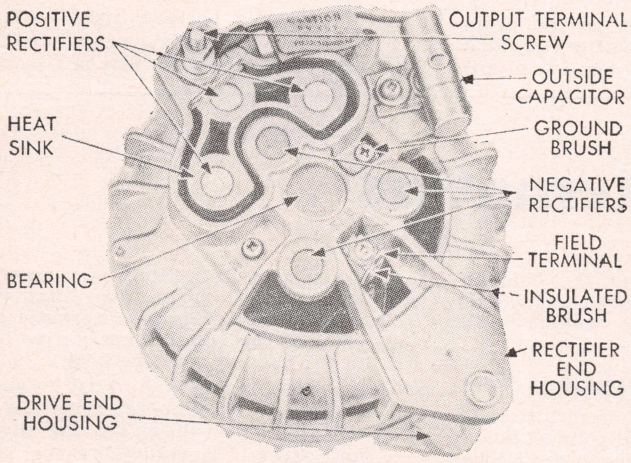

Fig. C2 Chrysler alternator

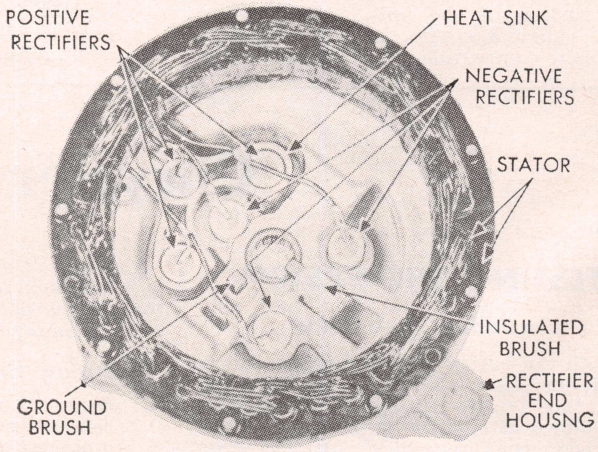

Fig. C3 Stator and rectifier end housing assembly

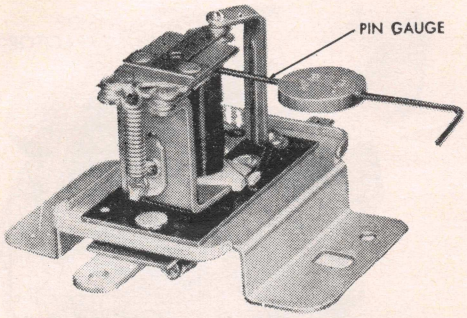

Fig. C5 Checking regulator armature air gap

Adjust engine speed to 1250 rpm. With 15 amperes flowing in the circuit, the voltage should be as given in the specifications table in the vehicle chapter.

4. Then increase engine speed to 2200 rpm with five amperes flowing. Voltage should not exceed previous readings by more than .7 volt.
5. If voltage specifications are not met, remove regulator for adjustment.

Voltage Regulator Adjustments

In making adjustments, do not short circuit between spring hanger and base or spring. Grounding the spring hanger will damage the regulator.

Service Note

The voltage regulator cover is retained by the regulator mounting screws. Therefore, each time it is necessary to adjust the voltage regulator, the assembly must be removed from the vehicle. As it may be necessary to remove the regulator several times to obtain the proper adjustment, it is suggested that a push-on regulator cover be used as a tool in adjusting regulators.

When a push-on cover is used, it is necessary to remove the regulator assembly from the vehicle to remove the original cover. The push-on cover is then used while performing the adjustment and testing operations. After the final adjustment has been made, reinstall the original cover.

A push-on cover tool can be made from a discarded regulator by bending the cover legs in such a manner that it will stay in place when pushed on.

Armature Air Gap

1. Check air gap with a test lamp connected between ignition and field terminals on regulator.
2. Insert a .048″ wire gauge, Fig. C5.
3. Press armature plate down (not contact spring). Contacts should open and test lamp should go dim.
4. Insert a .052″ gauge in same position and depress armature plate. Upper contacts should be closed and test lamp should remain lighted.
5. Bend upper contact support as necessary to obtain proper adjustment.

Point Gap

Set lower contact gap to .015″ (plus or minus .001″) by bending lower contact arm. Press armature plate down so that armature rests on nylon stop. Release and recheck gap.

Spring Tension

Always make this adjustment by bending lower spring hanger, Fig. C6. If voltage was found to be too high, bend lower hanger *up*. If voltage was too low, bend lower hanger *down*.

Install regulator and repeat tests outlined previously. If further adjustment is necessary, adjust spring tension only. *If adjustment is attempted on the vehicle, do not short circuit between spring hanger and base as regulator will be damaged.*

BENCH TESTS

Field Circuit

1. Disconnect field teminal wire at alternator and at voltage regulator.
2. Connect a D.C. ammeter positive lead to the alternator battery output terminal.
3. Connect the ammeter negative lead to the alternator field terminal.
4. The field current draw should be as specified in the table in the vehicle chapter while turning the rotor shaft manually.

Testing Rectifiers

The procedure for testing rectifiers in the Chrysler System is identical to that described for Prestolite Rectifiers. See the Prestolite section.

Testing Stator

1. Disconnect rectifiers from stator leads.
2. Inspect stator connections.
3. Test from stator leads to stator core, using a 110-volt test lamp. If lamp lights stator is grounded, in which case replace stator.

Service Note

Excessive Ammeter Fluctuation

If this condition shows up, and is accompanied by flickering headlamps or inferior lights, it may be caused by high resistance in the field circuit to the alternator, or an improperly set voltage regulator.

To correctly diagnose this condition, disconnect the lead at the "IGN" terminal of the regulator. Connect a jumper lead from the positive post of the battery to the "IGN" terminal of the regulator. This will by-pass the car wiring harness circuit to the regulator.

Start and operate the engine at 1250 rpm and observe the lights and ammeter pointer. If the pointer is now normal and the lights do not flicker the cause of the fluctuation is corrosion or other high resistance in the field circuit, connectors or the "in-line" fuse holder.

Remove the jumper lead. Clean the connections and tighten the connectors if necessary. Tape the fuse holder completely to prevent moisture and dirt from entering the holder.

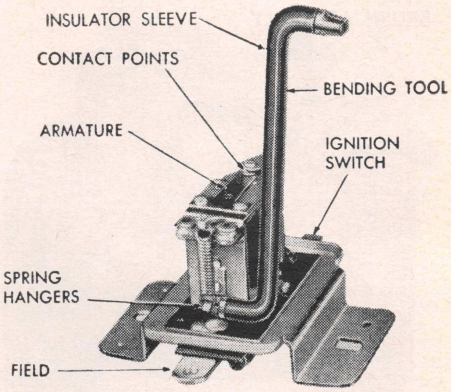

Fig. C6 Adjusting spring tension to obtain correct voltage

If the jumper lead did not correct the excessive ammeter fluctuation the regulator is improperly adjusted and should be corrected as outlined previously.

Excessive ammeter fluctuation should not be confused with the normal action of the regulator and ammeter in any car whether it has an alternator or D.C. generator in which the ammeter may normally show small irregular movements when the regulator just begins to regulate.

ALTERNATOR REPAIRS

Service Note

Whenever the alternator is disassembled for servicing, it is recommended that the two long rectifier-to-stator leads be located between the rectifiers in the heat sink and cemented to the rectifier end housing using weatherstrip adhesive. This is especially important if a replacement is made of an early type diode rectifier. The cementing of the leads will reduce vibration of the leads with resultant longer life of the rectifiers and leads.

Disassembly

To prevent possible damage to the brush assemblies, they should be removed before proceeding with the disassembly of the alternator. The insulated brush is mounted in a plastic holder that positions the brush vertically against one of the slip rings.

1. Remove the field terminal and related parts and lift the plastic holder containing the spring and brush from end housing, Fig. C7.
2. The ground brush is positioned horizontally against the remaining slip ring and is retained in a holder that is integral with the end housing. Remove the retaining screw and lift the clip, spring and brush from the end housing. *Stator is laminated; do not burr stator or end housings.*
3. Remove through bolts and pry between stator and drive end housing with a thin blade screwdriver. Care-

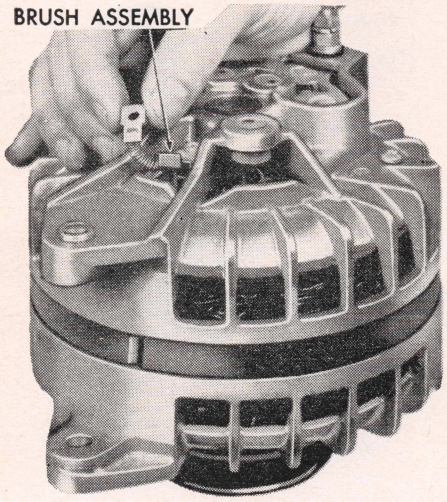

Fig. C7 Removing or installing insulated brush

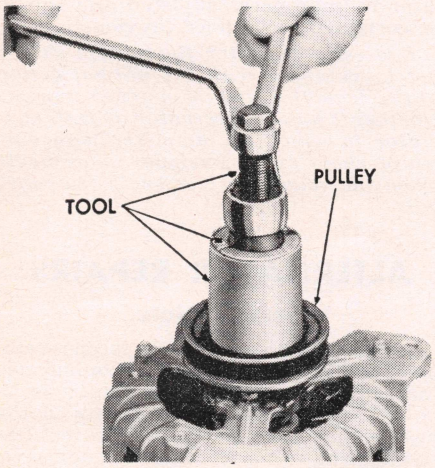

Fig. C8 Removing pulley

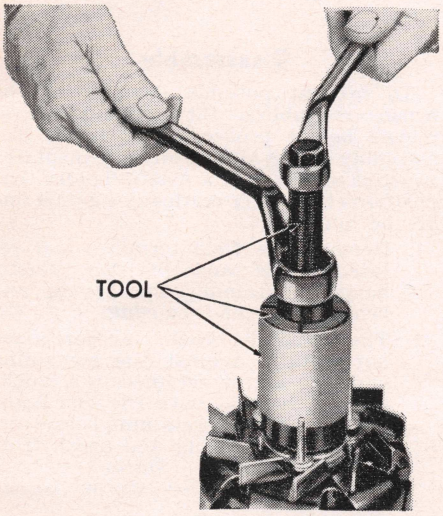

Fig. C9 Removing bearing from rotor shaft

fully separate drive end housing, pulley and rotor from stator and rectifier housing.

4. Remove pulley with a puller, Fig. C8.
5. Remove three nuts and washers and, while supporting end frame, tap rotor shaft with a plastic hammer and separate rotor and end housing.
6. Remove drive end bearing with a puller, Fig. C9.
7. Remove D.C. output terminal screw and inside capacitor or condenser (on units so equipped), Fig. C10.
8. The heat sink, Fig. C11, is held in place by terminal screw.
9. Remove the insulator.
10. When removing the rectifiers, it is necessary to support the end housing and/or heat sink to prevent damage to these castings.
11. Refer to "Rectifier Testing," and if the rectifiers must be replaced, proceed as follows: Cut rectifier wire at point of crimp. Support rectifier housing on Tool C-3771. This tool is cutaway and slotted to fit over the wires and around the bosses in the housing. Make sure that the bore of the tool completely surrounds the rectifier, then press the rectifier out of the housing, using Tool SP-3380, Fig. C12.

Reassembly, Fig. C13

1. Check rectifier identification to make sure correct rectifier is being used. Identifying part numbers are stamped on the case of the rectifier. They may also be identified by paint marks: red for positive and black for negative.
2. Start new rectifier into case squarely and press rectifier into casting, Fig. C14.
3. Crimp new rectifier wire to wires disconnected at removal.
4. Press bearing into end housing.
5. Insert bearing in drive end housing and install bearing plate, washers and nuts to hold bearing in place.
6. Position bearing and drive end housing on rotor shaft and, while supporting the base of rotor shaft, press bearing and housing into position on rotor shaft, Figs. C15 and C16. Bearing must contact shoulder on rotor shaft.
7. Install pulley on rotor shaft, Fig. C17. Shaft of rotor must be supported in a manner so that all pressing force is on pulley hub and rotor shaft. Bearing should just contact bearing inner race, and bearing should contact shoulder on rotor shaft.
8. If alternator is equipped with an internal capacitor (condenser), make sure heat sink insulator is in place.
9. Install output terminal screw with capacitor attached through heat sink and end housing. Install insulating washers, lock-washers and lock nuts.
10. Position stator on rectifier end housing. Make sure that all of the rectifier connectors and phase leads will not interfere with rotor fans and

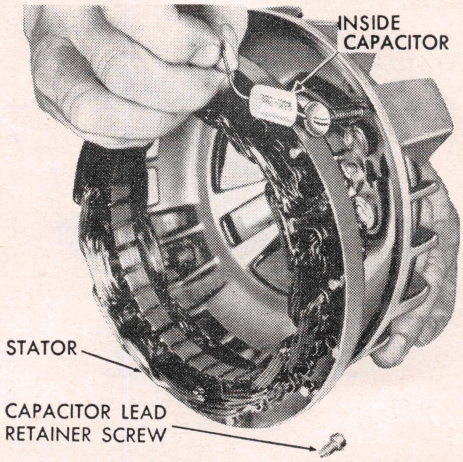

Fig. C10 Removing or installing inside capacitor

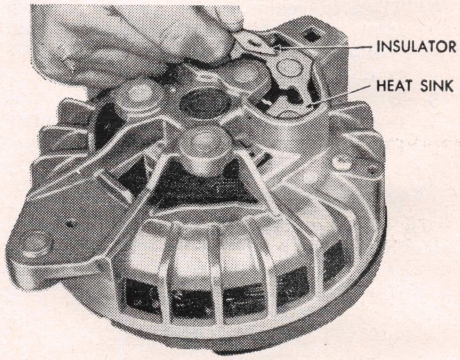

Fig. C11 Removing or installing heat sink insulator

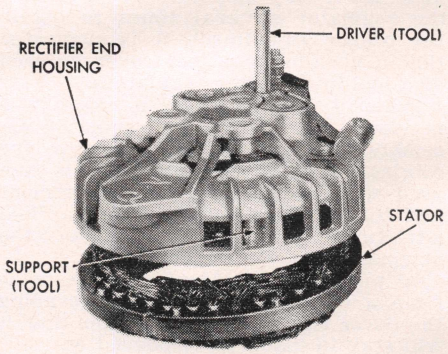

Fig. C12 Removing a rectifier

that capacitor lead has clearance.

11. Position rotor in rectifier end housing and drive end housing. Align through-bolt holes in stator, rectifier end housing and drive end housing.
12. Enter shaft in rectifier end housing bearing. Compress stator and both end housings manually and install through-bolts, washers and nuts.
13. Install insulating brush and components as shown in Fig. C18. *If the nylon washer is advertently assembled between brush contact and field*

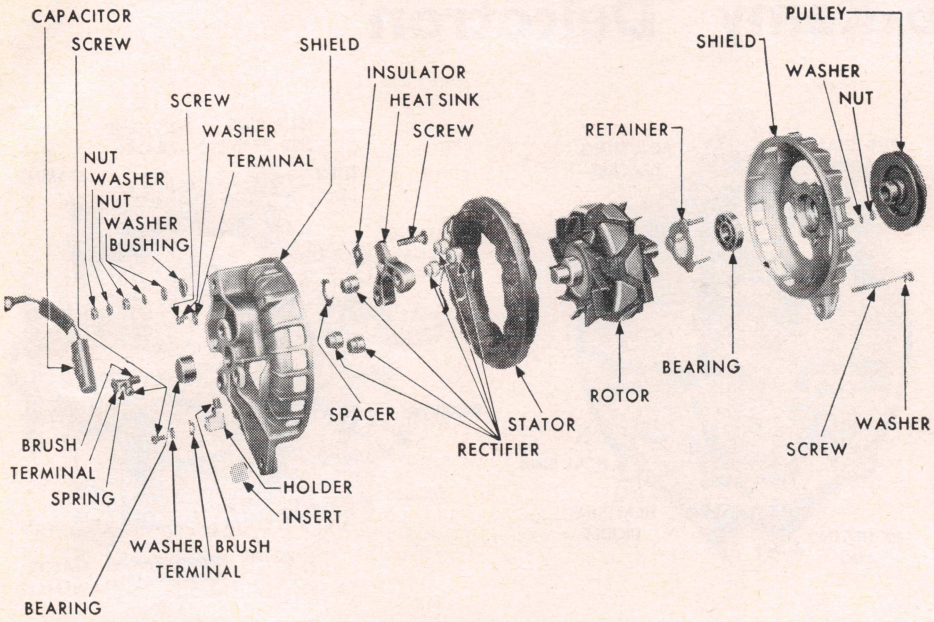

Fig. C13 Disassembled view of alternator

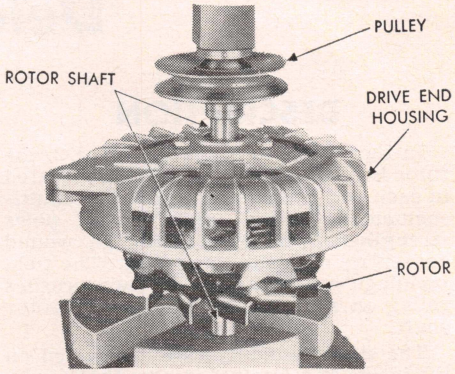

Fig. C17 Installing pulley

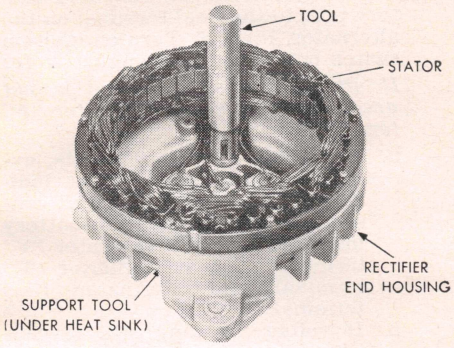

Fig. C14 Installing a rectifier

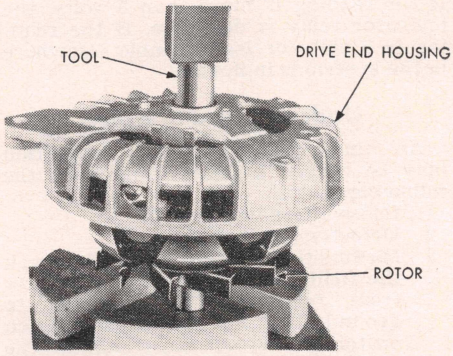

Fig. C16 Installing drive end housing and bearing on rotor shaft

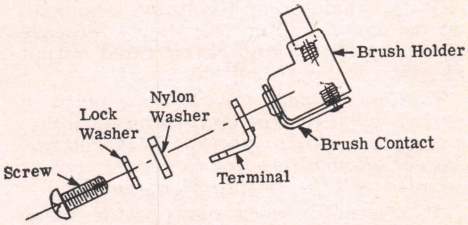

Fig. C18 Installing insulating brush and related parts

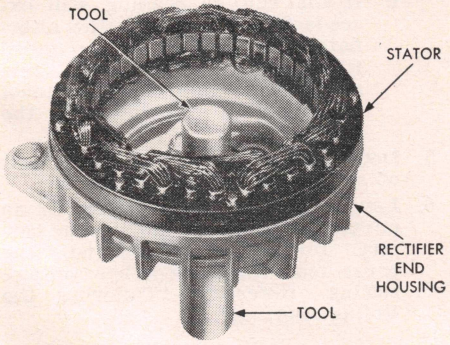

Fig. C15 Installing rectifier end housing

terminal, battery current from voltage regulator will short circuit directly to ground through brush holder screw and end shield. This will result in a blown in-line fuse or internal fuse wire and may possibly damage voltage regulator.

14. Install ground brush and attaching screw, Fig. C19.
15. Rotate pulley slowly to make sure rotor fans do not hit rectifier and stator connectors.

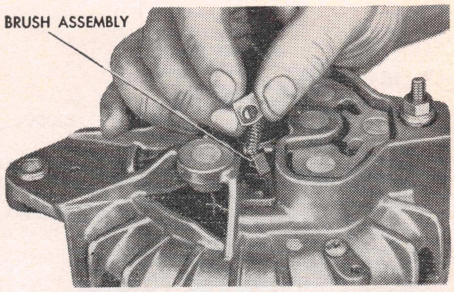

Fig. C19 Installing ground brush

Delco-Remy "Delcotron"

DESCRIPTION

In these alternators, Figs. D1, D2, the rotor is mounted on ball bearings located in each end frame, and consists of multi-segmented north and south poles strengthened by field windings wound concentric with the rotor shaft. The field windings are energized by two brushes riding on slip rings pressed on the rotor shaft.

The stator windings are assembled on the inside of a laminated core that forms the Delcotron frame. Six rectifier diodes are mounted into two heat sinks located in the slip ring end frame. The diodes change the A.C. voltage to D.C. voltage which appears at the output terminal of the Delcotron.

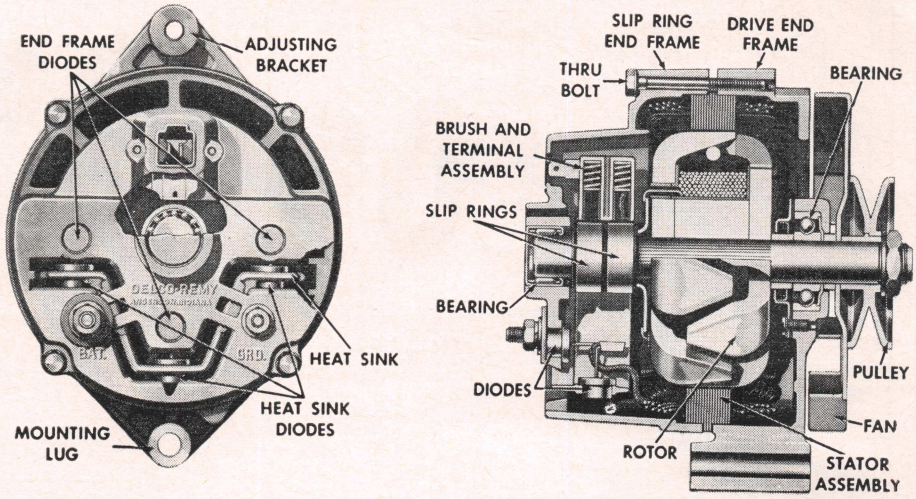

Fig. D1 Aluminum Delcotron (5.5")

TESTING SYSTEM IN VEHICLE

Output Test

With ammeter and voltmeter hooked-up as shown in Fig. D3, slowly increase alternator speed and check rated output as given in Specifications Chart.

Caution: Load the battery with a carbon pile rheostat or turn on all lights and accessories to prevent high voltage. Do not allow alternator to exceed recommended voltage setting of regulator.

If alternator does not provide rated output, it should be removed for service as given further on.

Indicator Light & Relay Test

Turn on ignition switch, but do not start engine. If light does not come on, check for burned out bulb.

If the light comes on and continues to glow with the alternator operating at moderate speed, check the voltage from the regulator "R" terminal to ground with the alternator in operation, Fig. D4. If the reading is more than 5 volts, the indicator relay is defective. If the reading is 5 volts or less, trouble elsewhere in the system is indicated.

Undercharged Battery

An undercharged battery condition may be caused by one or more of the following factors:

1. Loose alternator drive belt.
2. Defective battery.
3. Malfunction of field relay. To check the field relay, connect a voltmeter from regulator "F" terminal to ground, Fig. D5. Turn on ignition switch but do not start engine. The voltmeter should read battery voltage. If it reads zero volts, the field relay contacts are not closed and the relay requires further attention.
4. Excessive circuit resistance. To check for this condition, connect a voltmeter from the insulated battery post to the field terminal on the alternator, Fig. D6. Turn on ignition switch but do not start engine. *Note: If alternator field terminal is not accessible, connect to regulator "F" terminal.*
   a. If reading exceeds 0.3 volts, excessive line resistance is indicated. Clean and tighten all connections at and between battery insulated post and regulator "V" terminal, and at regulator "F" terminal and alternator field terminal.
   b. If voltage reading still exceeds 0.3 volts, clean the alternator "Bat" terminal, field relay contacts and voltage regulator contacts.
   c. If the voltage reading still exceeds 0.3 volts, check the alternator for shorted or grounded fields. Remove lead from alternator field terminal and connect an ammeter in series with the field winding.
5. Defective alternator. Check output of alternator as outlined above.
6. Low voltage regulator setting. If no circuit defects are found, yet the battery remains undercharged, the cause most likely is a low voltage setting. Refer to "Tailoring the Voltage Setting".

Overcharged Battery

An overcharged battery may be caused by one or more of the following conditions:

1. Shorted battery cell.
2. Excessive circuit resistance. Check for this condition as covered under "Undercharged Battery".
3. High voltage regulator setting. If no circuit defects are found, yet the battery remains overcharged, refer to "Tailoring Voltage Setting".

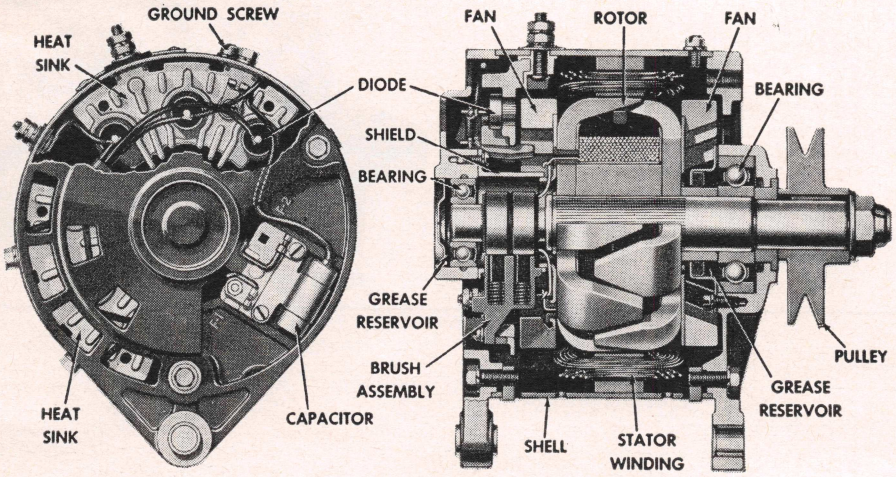

Fig. D2 Perforated Stator Delcotron (6.2")

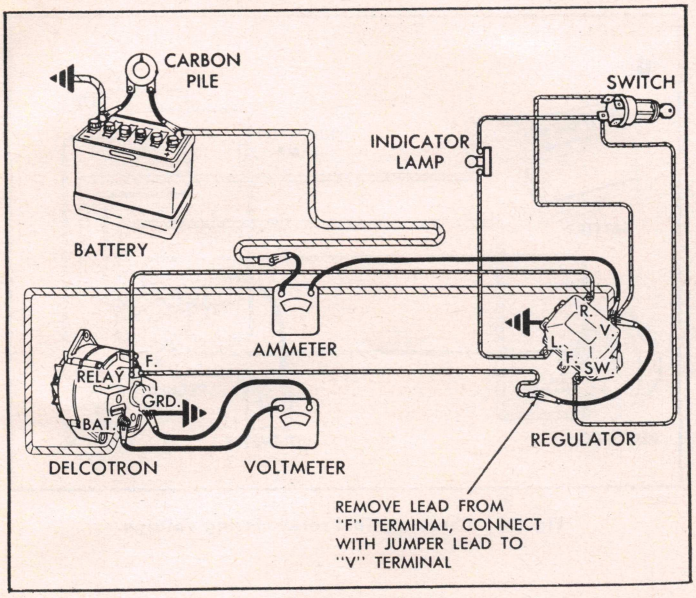

Fig. D3 Checking 5.5" alternator output

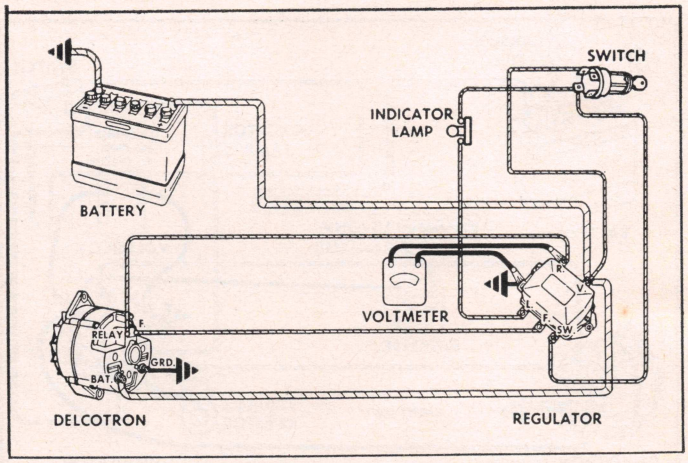

Fig. D4 Checking indicator light relay

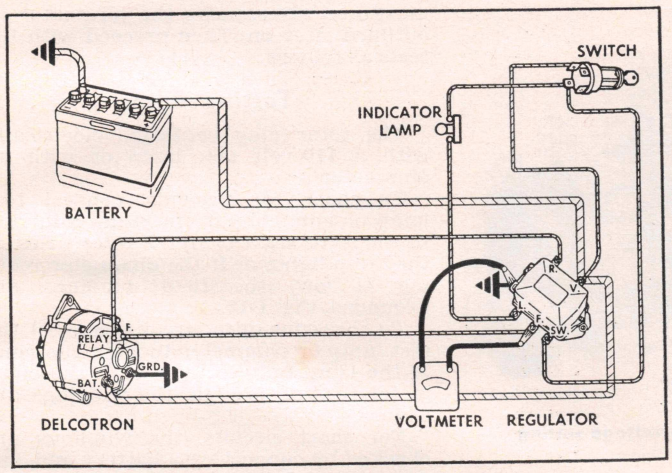

Fig. D5 Checking field relay

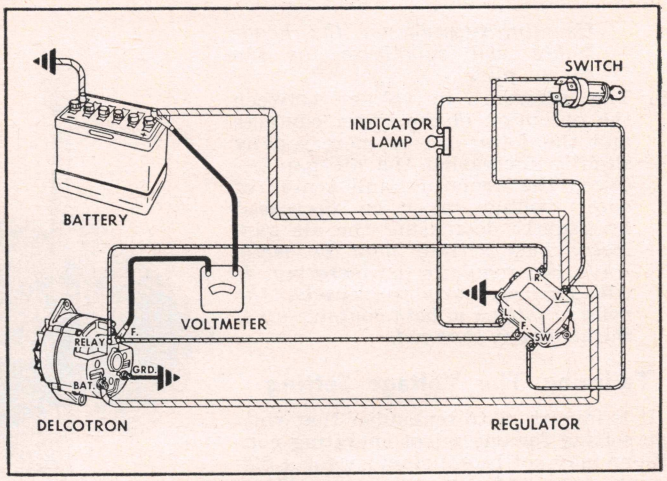

Fig. D6 Checking circuit resistance

Voltage Setting

The voltage at which the regulator operates varies with changes in regulator ambient temperature (temperature of air ¼" from regulator cover). To check and adjust voltage setting, proceed as follows:

1. Make connections to system as shown in Fig. D7. The ¼ ohm resistor shown will limit the alternator output to 10 amperes or less which is required when checking and adjusting voltage setting.
2. Turn the variable resistor shown to the "no resistance" position.
3. Operate the alternator for 15 minutes at approximately 3000 rpm so that the regulator is operating on the upper set of contacts. *Leave cover on regulator to establish operating temperature.*
4. After the 15 minute warm-up period, cycle the alternator (turn off ignition and stop alternator.) Disconnect jumper lead from "V" to "Bat" terminals. *Caution: Turning the field rheostat connected at regulator "F" terminal will not cycle the alternator—leave rheostat in closed position.*
5. Reconnect jumper lead. Again run alternator at approximately 3000 rpm and note voltage reading (see Specifications Chart).
6. To adjust voltage while operating on the upper set of contacts, turn adjusting screw as shown in Fig. D8. *Caution: Always make final setting by turning screw clockwise. This insures that the spring holder will be against the screw head. After turning screw counterclockwise, pry holder up against screw head, then turn clockwise to make setting.*
7. After making setting, re-cycle the alternator. Then again operate alternator at about 3000 rpm and note voltage setting; readjust if necessary. *Note: Always cycle alternator before taking final voltage reading.*
8. After setting the voltage while operating on the upper set of contacts, check the setting while operating on the lower set of contacts as follows:
   a. Slowly increase the resistance of the variable resistor with the engine operating at 3000 rpm until the regulator begins to operate on the lower set of contacts. Note voltage reading and compare to those given in Specifications Chart. *Note: Turning the variable resistor does not cause the regulator to operate on the lower set of contacts. Return the variable resistor to the "no resistance" position. Turn the carbon pile to slightly load the battery, and adjust the variable resistor to cause the regulator to operate on the lower set of contacts.*

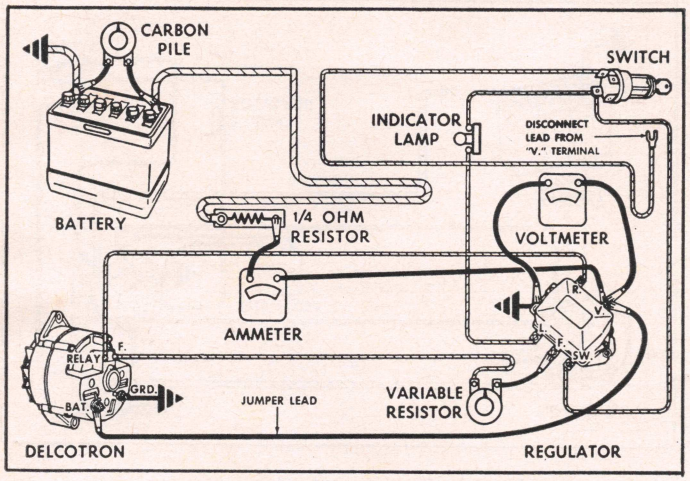

Fig. D7 Checking voltage setting

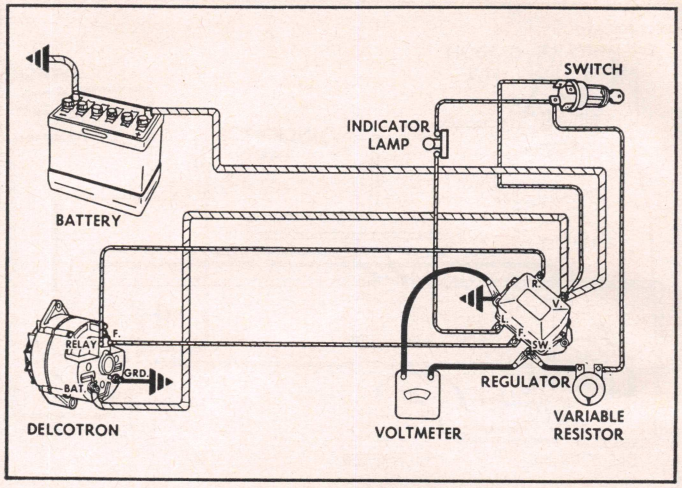

Fig. D9 Checking field relay closing voltage

Usually, turning on the headlights will substitute for the carbon pile.

9. The difference in voltage between the operation of the upper contacts and the lower set is increased by slightly increasing the air gap between the armature and center of core; voltage may be decreased by slightly decreasing the air gap. *Note: This setting may be made while the regulator is operating. It will be necessary to recheck the voltage setting of both contact sets if the air gap is changed.*

Tailoring The Voltage Setting

It is important to remember that voltage setting for one set of operating conditions may not be satisfactory for a different type of operating condition. Underhood temperature, operating speeds, and night time service are all factors which affect the proper voltage setting. The proper setting is obtained when the battery remains fully charged with a minimum use of water.

If no circuit defects are found, yet the battery remains undercharged, raise the setting by 0.3 volt. Then check the battery over a period of time to see if improvements were achieved. Reset regulator if necessary.

Field Relay Unit

1. To check the closing voltage of the field relay unit, make connections as shown in Fig. D9, using a 50-75 ohm variable resistor.
2. Turn resistor to open (maximum resistance) position.
3. Turn on ignition switch. *If oil pressure switch is used, temporarily place a jumper wire across terminals.*
4. Slowly decrease resistance and note closing voltage of relay. Adjust by bending heel iron, Fig. D10.

Indicator Light Relay Unit

1. To check the opening voltage of the indicator light relay, connect a 50-75 ohm variable resistor between the regulator "V" and "R" terminals.
2. Turn resistor to open (maximum resistance) position.
3. Connect a voltmeter from the regulator "R" terminal to ground (see Fig. D4).
4. Slowly decrease resistance and note the opening voltage. Adjust by bending heel iron as shown in Fig. D10.

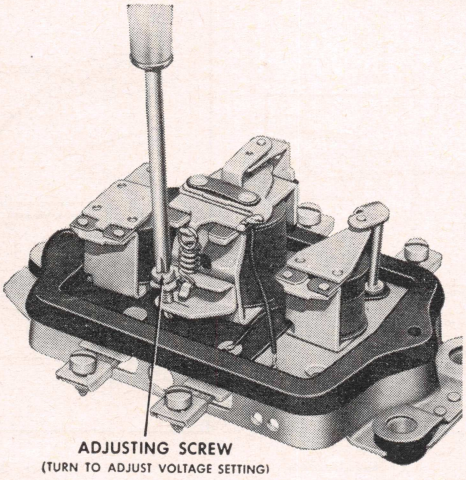

Fig. D8 Adjusting voltage setting

BENCH TESTS

Fig. D10A is a convenient chart for making bench tests on Delcotrons. Due to the ease of stator removal in the flat heat sink 5.5" units, it is advisable to remove the stator before making any stator or diode electrical tests. To remove the stator, remove all three stator lead attaching nuts, then separate the stator from the end frame. The fit between the stator and end frame is not tight so the two should be easy to separate by hand. After the stator is removed, the electrical tests are identical on both the flat heat sink and "Gull Wing" heat sink units.

The operations described below are for both types of alternators, Figs. D11 and D12. Where important differences in testing are encountered, separate mention will be made of the two alternators. Remove and disassemble the alternator as outlined later on. Then proceed with the tests as follows:

Testing Rotor

The rotor may be tested electrically with a 110-volt test lamp or with an ohmmeter.

To check for grounds, connect test lamp or ohmmeter from either slip ring to the rotor shaft or to the rotor poles. If the lamp lights or if the ohmmeter reading is low, the field windings are grounded, Fig. D13.

To check for open circuits, connect the test lamp or ohmmeter to each slip ring. If the lamp fails to light or if the ohmmeter reading is high, the windings are open.

For short circuits, the windings are checked by connecting a battery and ammeter in series with the two slip rings. An ammeter reading above 1.5 amperes indicates shorted windings. An alternate method is to check the resistance of the

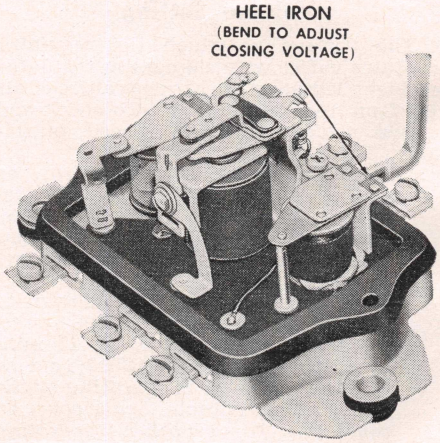

Fig. D10 Adjusting field relay unit

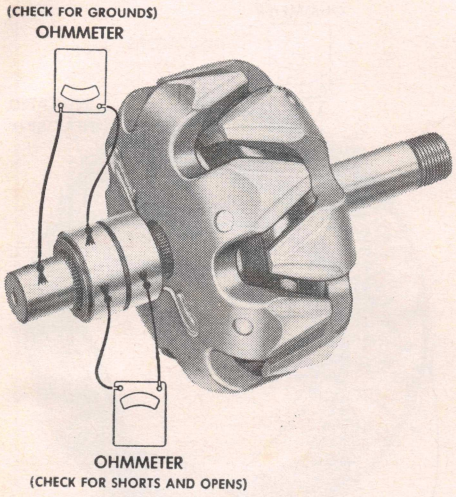

Fig. D13 Checking rotor for grounds and open circuits

COMPONENT	TEST CONNECTION	NORMAL READING	IF READING WAS	TROUBLE IS
ROTOR	Ohmmeter from slip ring to rotor shaft	Infinite resistance	Very low	Grounded
	110 volt test lamp from slip ring to shaft	No light	Lamp lights	Grounded
	Ohmmeter across slip rings	5.5" units—5 to 7 ohms 6.2" unit—7 to 9 ohms	Very high	Open
			Very low	Shorted
	110 volt test lamp across slip rings	Lamp lights	No light	Open
	12 volt battery thru ammeter to slip rings	5.5" units—2.2 amps. 6.2" unit—1.5 amps.	High	Shorted
			Low	Open
STATOR	Ohmmeter from stator lead to frame	Infinite resistance	Very low	Grounded
	110 volt test lamp from lead to frame	No light	Lamp lights	Grounded
	Ohmmeter across each pair of leads	Less than ½ ohm	Any reading very high	Open
	110 volt test light across each pair of leads	Lamp lights	No light	Open
DIODES	Ohmmeter across diode, then reverse connections	A low meter reading one way, near infinite reading the other	Both readings very low	Shorted
			Both readings very high	Open
	12 volt test lamp across diode, then reverse connections	Lamp should light one way, and not the other	Lamp fails to light in both checks	Open
			Lamp lights in both checks	Shorted

Fig. D10A Delcotron bench tests

field by connecting an ohmmeter to the two slip rings, Fig. D13. If resistance is below 6 ohms the winding is shorted.

Testing Stator

To test for grounds, connect a 110-volt test lamp or an ohmmeter from any stator lead to the stator frame. If test lamp lights or if ohmmeter reads low, the windings are grounded, Figs. D14, D15.

To test for open circuits, if lamp fails to light or if ohmmeter reads high when successively connected between each pair of stator leads, the windings are open, Figs. D14, D15.

A short in the stator windings is difficult to locate without special test equipment due to the low resistance of the windings. However, if all other electrical checks are normal and the alternator fails to supply rated output, shorted stator windings are indicated.

Testing Diode Rectifiers

An ohmmeter or a 12-volt test lamp may be used to check diodes for shorts or opens. *Caution: Do not use a 110-volt test lamp to test diodes.*

Ohmmeter Method

1. Use an ohmmeter with a 1½ volt cell and use the lowest range scale.
2. With the stator disconnected, check a diode in the heat sink by connecting one of the ohmmeter leads to the heat sink and the other lead to the diode lead and note the reading, Figs. D16, D17.
3. Reverse the ohmmeter leads and note the reading.
4. If both readings are very low, or if both readings are very high, the diode is defective. *A good diode will give one low reading and one high reading.*
5. Check the other two diodes in the heat sink in the same manner.
6. To check a diode mounted in the end frame, connect one of the ohmmeter leads to the end frame and the other

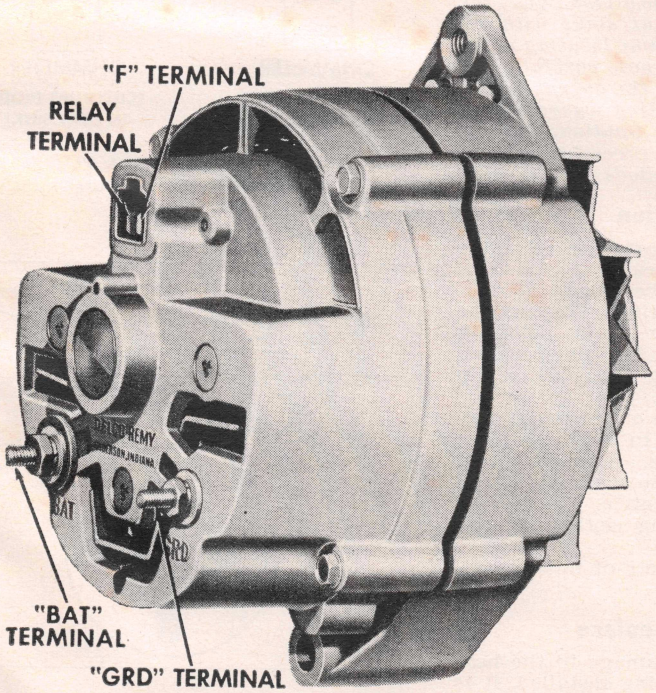

Fig. D11 Aluminum Delcotron (5/5")

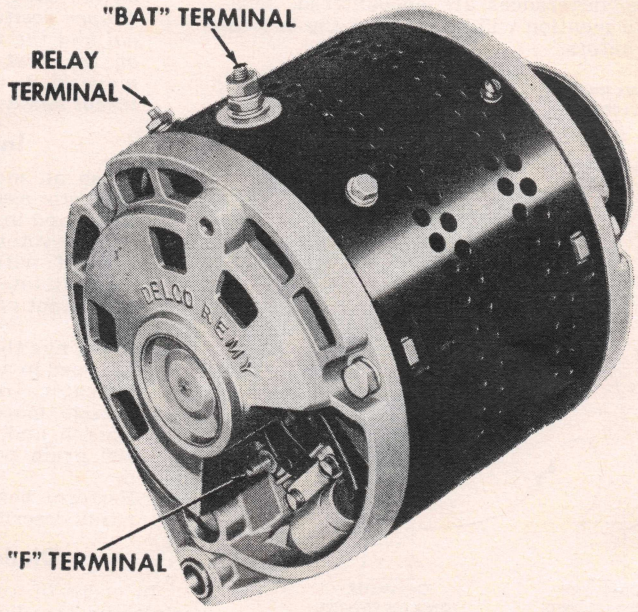

Fig. D12 Perforated Stator Delcotron (6.2")

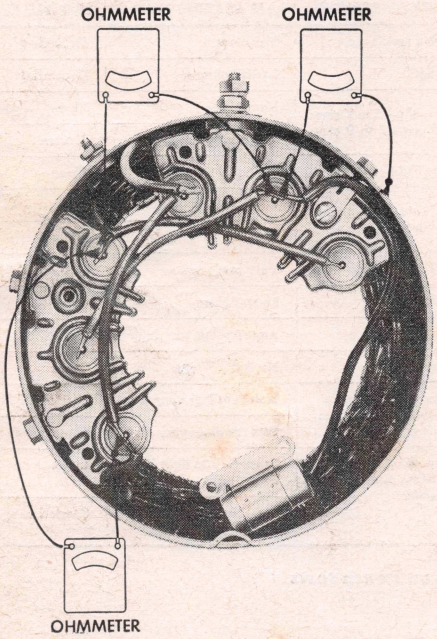

Fig. D14 Checking 6.2" stator for grounds and opens

lead to the diode lead, Figs. D16, D17.

7. Note the reading. Then reverse the ohmmeter lead connections and note the reading. Interpret readings as mentioned in Step 4.

Test Lamp Method—Check as above with a 12-volt test lamp. When checking a diode, the lamp will light in only one of the diode checks. If lamp lights when checked in both directions, the diode is defective.

DELCOTRON REPAIRS

Service operations described below are for both type alternators. Where important differences are encountered, separate mention will be made of the two alternators.

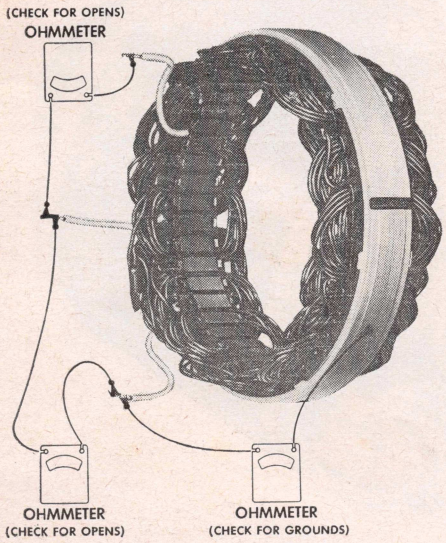

Fig. D15 Checking 5.5" stator for grounds and opens

Removal

Caution: Disconnect battery ground strap to prevent accidentally reversing the polarity of the system and damaging the diode rectifiers.

1. Disconnect "Bat", "Relay" and "Grd" leads from alternator terminals, and harness connector from field terminals at brush holder.
2. Remove alternator brace bolt, detach fan belt and lower alternator.
3. Remove bracket bolt or bolts and remove alternator from vehicle.

Disassembly

1. Remove through bolts and separate drive end frame and rotor assembly by prying apart at stator slot. Note that the separation is to be made between the stator frame and drive end frame.
2. After disassembling, place a piece of tape over the slip ring end frame bearing to prevent entry of dirt. *Caution: Brushes may drop onto rotor shaft and become contaminated with bearing lubricant. Clean brushes prior to installation with a non-toxic cleaner.*
3. Separate rotor from drive end frame.
4. Remove drive end frame bearing by removing retainer plate screws and separating retainer plate from end frame.
5. Remove slip ring brush holder from end frame.
6. Separate stator assembly and end frame by first cutting three diode connectors just below the crimp mark, Fig. D18. If the connectors are full of solder, melt the solder and then remove connectors with pliers. Cut diode leads as close as possible on the 6.2" Delcotron. Separate stator frame from end frame. *Note: On the 6.2" Delcotron, note carefully the stator lead locations, and the location of the heat sinks with respect to the end frame locating notch on the shell. Also note carefully the proper position of the output terminal and the insulating washers used on the heat sink. Caution: Do not move diode stems excessively or internal damage to diode may result.*

Inspection

1. Wash all metal parts except stator and rotor assemblies.
2. Clean and inspect bearings.
3. Inspect rotor slip rings. They may be cleaned with 400 grain polishing cloth. Rotate rotor for this operation to prevent creating flat spots on slip rings.
4. Slip rings that are out of round may be trued in a lathe to .001" maximum indicator reading. Remove only enough material to make the rings smooth and concentric. Finish with 400 grain polishing cloth and blow dry.
5. Perform bench tests of units as already described.

Diodes, Replace

In order to avoid damage to the heat sink and the diode being installed, it is recommended that the tools shown in Fig. D19 be used when replacing diodes.

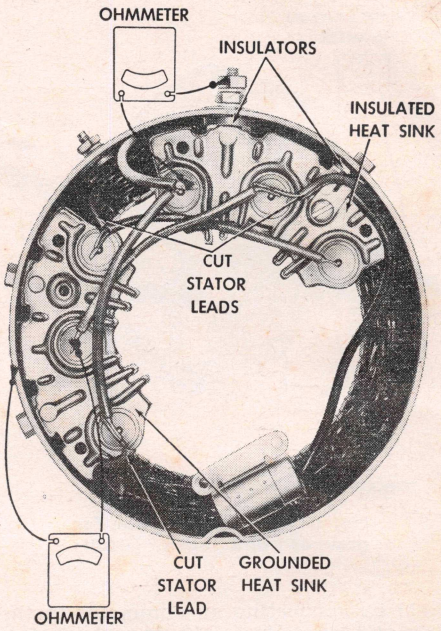

Fig. D16 Checking 6.2" Delcotron diode rectifiers

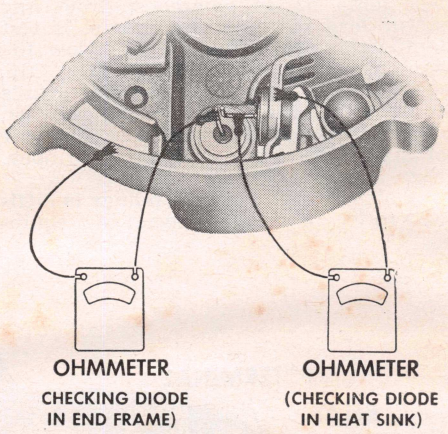

Fig. D17 Checking 5.5" Delcotron diode rectifiers

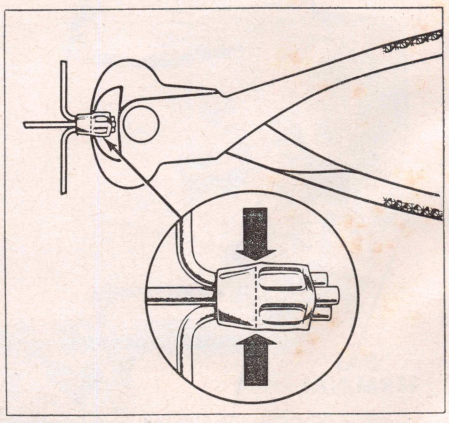

Fig. D18 Cutting diode connectors (5.5" Delcotron)

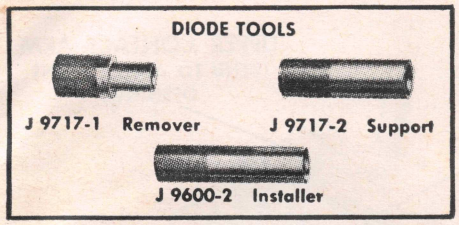

Fig. D19 Diode service tools

These tools are available from various suppliers, among which are the Kent-Moore Organization, Inc., Warren, Mich.

Negative case diodes have black markings on the case, and positive case diodes have red markings on the case. Inspect the diodes for color markings, Fig. D20, and note that the heat sink connected to the alternator output terminal is insulated from the shell, and the other heat sink is grounded to the shell.

When replacing diodes in the 5.5" Delcotron with "Gull Wing" heat sink, the heat sink must be removed from the end frame and properly supported for diode press operations. When replacing diodes in the 6.2" Delcotron or in the 5.5" unit with the flat heat sink, the heat sink must be properly supported for press operations, regardless of whether the heat sink is removed or left installed in the shell or end frame.

1. To replace a defective diode on the 5.5" Gull Wing Delcotron, cut the diode and stator leads at all diode tubular connectors. On the 6.2 Delcotron, if the diode is to be replaced without removing the heat sink, cut the leads only at the diode being replaced. All diode and stator leads on the 5.5" unit with flat heat sink are provided with eyelet terminals.
2. Remove the 5.5" Gull Wing heat sink from the end frame by removing the "BAT" and "GRD" terminal screws. On 5.5" units with flat heat sink, if the heat sink is to be removed for diode replacement, remove the screw from the condenser lead also.
3. To remove diodes from both 5.5" and 6.2" units, use the appropriate tool to support the heat sink or end frame at the terminal side of the diode while pressing out the diode. Use an arbor press or large bench vise for the press operation. *Do not attempt to remove a diode by striking the assembly as the shock may damage good diodes that are installed.*
4. To install a new diode, support the underside of the heat sink on a suitable flat surface. Press the new diode into place, using an installer that has a special shoulder to accept the diode.
5. When connecting a 5.5" Gull Wing or a 6.2" Delcotron replacement diode in the circuit, insert the stator and diode leads into the special tubular connector. Using pliers, crimp the connector only tight enough to hold the leads for soldering. *Crimping the connector lightly will permit its later removal, if necessary, without further shortening the leads.* Establish a good electrical connection by filling the connector with rosin core solder. *To be sure that the diode is not damaged by heat during soldering, reduce heat transfer to the diode by clamping pliers on the diode lead.*

Delcotron Condenser

The condenser (or capacitor) attached to the Delcotron rear end frame is not primarily used for radio suppression although it does help in this respect. The unit's main job is to protect the positive diodes from surges of transient voltage produced during operation of the Delcotron.

Since the condenser is rated at only 5 microfarads, it is impractical to test the capacitance with conventional equipment. However, the unit must be tested for a short to ground. This test can be made with a 1.5 volt ohmmeter or a 12 volt test light. Connect one test lead to the condenser lead and the second test lead to the case. Wiggle the condenser "pig tail" lead. The ohmmeter should show infinite resistance or the light should not glow throughout the test. Any condenser that allows current leakage, as indicated by a low meter reading or a glowing test lamp, must be replaced. The "Gull Wing's" version condenser bracket is retained to the end frame by a machine screw. Simply remove this screw to install a new condenser.

Replacement of the flat heat sink unit's condenser involves a press operation. The condenser is retained in the bore by a spring steel retainer with both external and internal teeth. Since the retainer is countersunk, the condenser must be pressed from inside the end frame or pig tail end of the condenser for both removal and replacement. A shouldered diode installing tool or its equivalent may be used for pressing the condenser. Use care to avoid damaging the condenser case. Do not drive the condenser in or out of the end frame as the shock may damage the diodes. Always test the new condsenser after installation.

If the Delcotron has experienced repeated diode failure, replace the condenser. The possibility that a faulty condenser caused the diode failure is very slight, but a new one is good insurance.

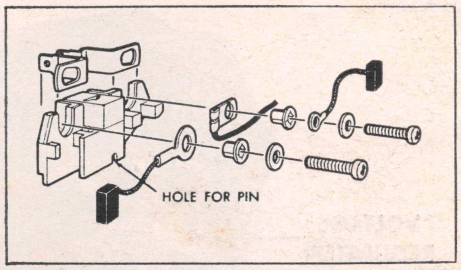

Fig. D21 Installing brushes (5.5" Delcotron)

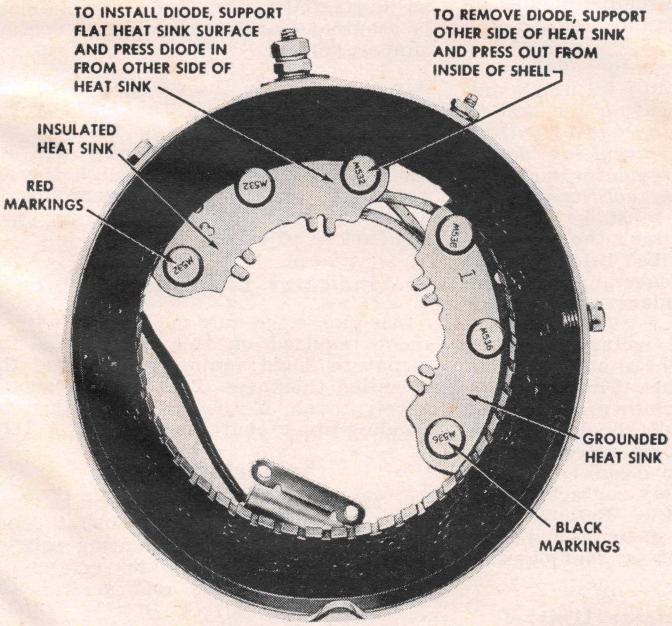

Fig. D20 Removing and installing diode rectifiers

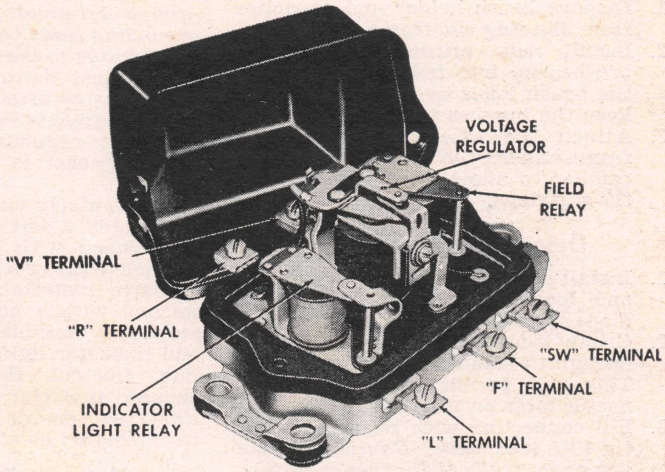

Fig. D22 Three unit double contact regulator used on vehicles having an indicator light instead of an ammeter

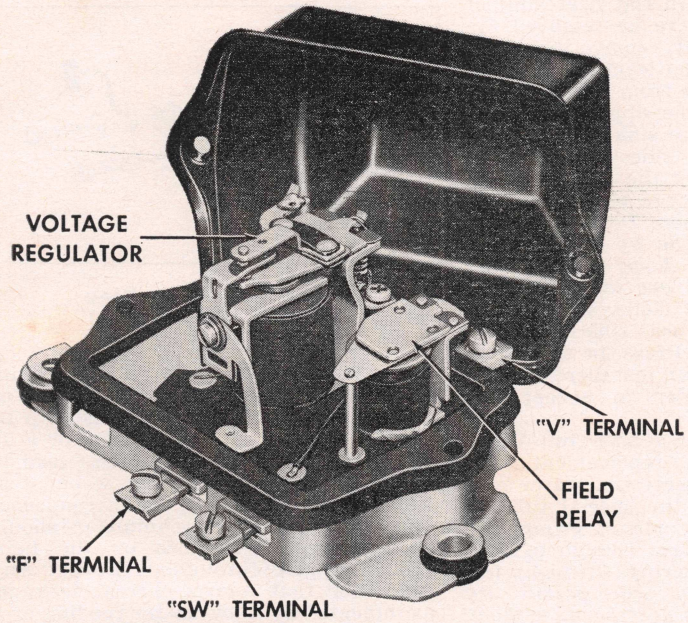

Fig. D23 Two unit double contact regulator used on vehicles having an ammeter instead of an indicator light

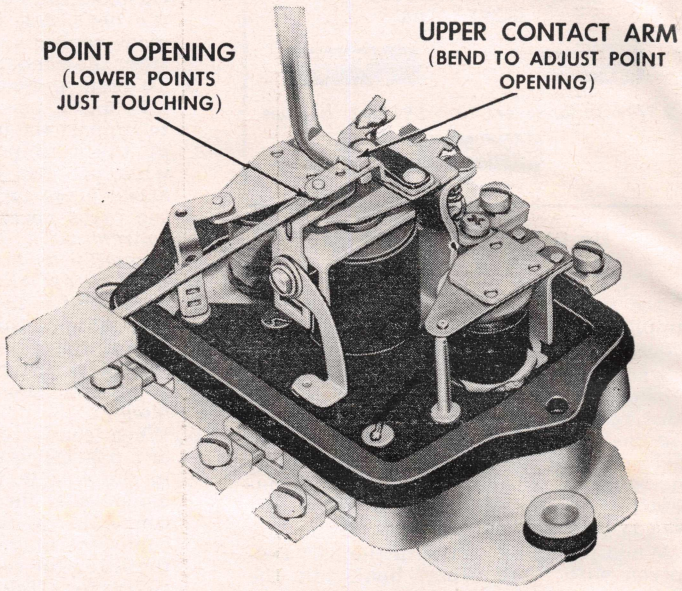

Fig. D24 Adjusting voltage regulator point opening

Brushes, Replace

After removing brush holder, inspect brushes for wear. If they are worn halfway, they should be replaced. Inspect brush springs for discoloration or weakening. If brushes appear satisfactory and move freely in brush holder, springs may be re-used.

5.5" Delcotron

1. Remove heat sink.
2. Attach brush holder to end frame and insert pin or wire through hole, Fig. D21, to hold brushes in holder.
3. After unit has been completely assembled, withdraw pin or wire to allow brushes to drop down onto slip rings.
4. Replace heat sink, following carefully the proper stack-up of parts.

6.2" Delcotron

1. Remove brush holder and capacitor from slip ring end frame.
2. Install new brushes by pushing brushes up into holder and looping the brush leads over the catcher to keep the brushes in the holder.
3. Attach the assembly to the end frame and lift the brush leads off the catcher to allow brushes to ride on the slip rings.

Delcotron, Assemble

1. Install stator in slip ring end frame and locate connectors over relay, diode and stator leads.
2. Crimp leads with pliers only tight enough to hold connector onto leads. This will permit removal of connector later on if necessary.
3. Fill connectors with rosin core 60% tin 40% lead solder. *Caution: Do not use excessive heat for this operation, and carefully inspect to make sure no solder has run down onto diode.*
4. Position rotor and drive end frame into slip ring end frame and stator. Install and tighten through bolts.
5. Install brush holder on slip ring end frame, where necessary.

DOUBLE CONTACT REGULATORS

Figs. D22, D23 illustrate the two types of voltage regulators commonly used with "Delcotron" alternators. While most regulator adjustments are made on the vehicle as outlined under Testing System In Vehicle, the regulator must be removed for point cleaning and air gap adjustment.

To remove the regulator, disconnect the leads at the regulator terminals and remove the screws securing the unit to the vehicle. *Caution: Disconnect battery ground terminal to prevent accidently grounding leads from regulator and causing damage to the diode rectifiers.*

Electrical settings must be checked and adjusted after making the mechanical adjustments described below. Before installing regulator cover, make sure rubber gasket is in place on regulator base.

The contacts on the voltage regulator unit are of a soft material and must not be cleaned with a file. They may be cleaned with crocus cloth or other fine abrasive material, and should then be washed with a non-toxic solvent to remove any residue. To clean field relay and indicator light relay contacts, use a thin, fine-cut, flat file. Remove only enough material to clean the points. *Never use emery cloth or sandpaper to clean contact points.*

Voltage Regulator Unit

Point Opening—With lower contacts touching, measure point opening between upper contacts as shown in Fig. D24. Adjust by bending upper contact arm.

Air Gap—Measure air gap between armature and core with lower contacts touching, Fig. D25. To adjust, loosen contact support bracket screw about 1/8 to 1/4 turn. Place screwdriver in slot in contact support bracket and into the molded insulator (see Fig. D28). Raise screwdriver handle to increase the air gap and lower the handle to lower air gap.

Field Relay Unit

Point Opening—Point opening is checked as illustrated in Fig. D26. If adjustment is required, carefully bend flat contact support spring.

Air Gap—Check the air gap with the points just touching, Fig. D27. If the point opening and closing voltages are within specifications, the relay will operate satisfactorily even though the air gap may not be exactly according to specifications. Normally, the air gap need not be adjusted.

Indicator Light Relay Unit

Air gap is the only mechanical adjustment required on this unit. Hold the armature down against a gauge of the specified thickness. The contacts should barely touch. If they do not, adjust by bending upper contact support, Fig. D28.

Regulator, Install

1. Make sure attaching area is clean for proper ground, then install regulator and tighten mounting screws. *Caution: Do not tighten screws excessively as this will destroy the cushioning effect of the rubber grommets in the mounting.*
2. Attach regulator leads to proper

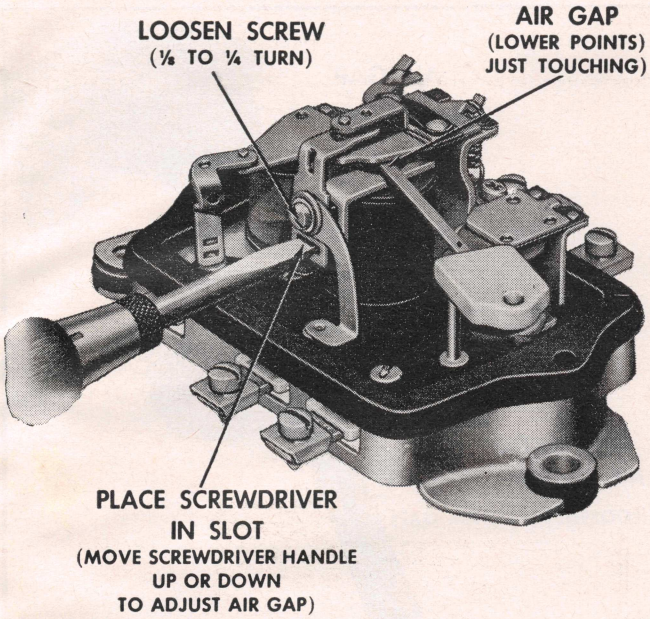

Fig. D25 Adjusting voltage regulator air gap

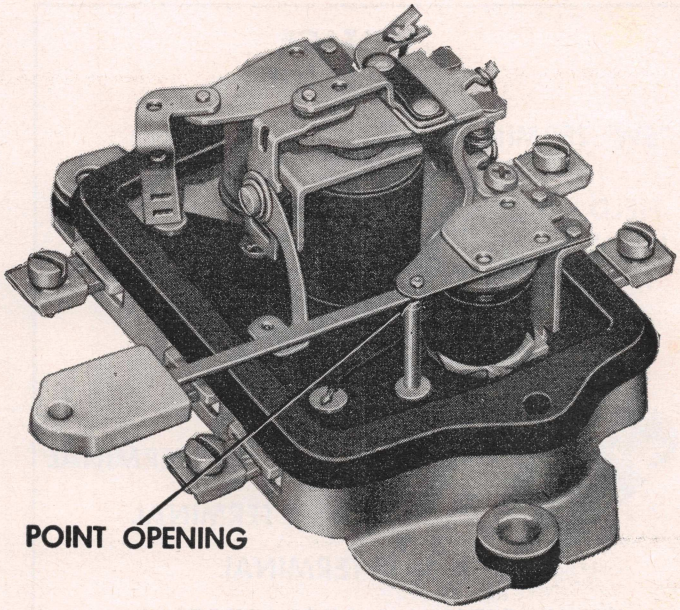

Fig. D26 Checking field relay point opening

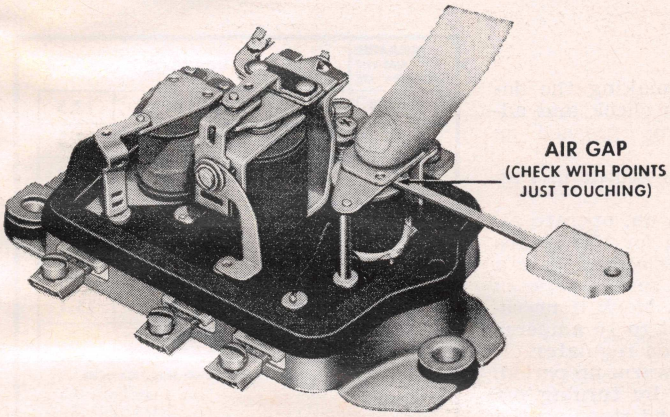

Fig. D27 Checking field relay air gap

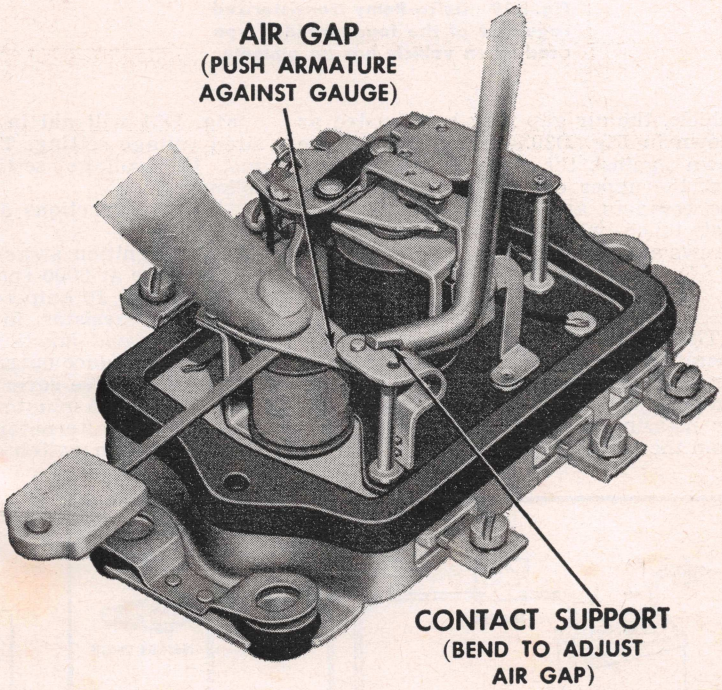

Fig. D28 Adjusting indicator light relay air gap

terminals. *Caution: Do not polarize the alternator.*

3. Connect battery ground terminal.
4. Check and adjust electrical settings as covered under Testing System In Vehicle.

DELCO-REMY TRANSISTORIZED REGULATORS

The four-terminal regulator shown in Fig. D29 is used in circuits with an ammeter. Note that this assembly contains a vibrating voltage regulator unit and a field relay unit.

A three-terminal regulator is used in circuits with either an ammeter or an indicator light. This assembly contains a vibrating voltage regulator and an indicator light relay unit.

Each type of regulator uses a single transistor and a diode. The transistor works in conjunction with the conventional voltage regulator having a vibrating contact point to limit the alternator voltage to a pre-set value. Because of its ability to permit current to flow in one direction but not in the other, the diode reduces arcing at the voltage regulator contacts by dissipating the energy created in the alternator field windings when the contacts separate.

Greater alternator field current and smaller voltage regulator contact point current both result from the use of a transistor. This improves alternator performance and lengthens contact point life.

Four-Terminal Type

An ammeter is used in the charging circuit with this type regulator. *Caution: Do not short across F-1 and F-2 terminals on the regulator and alternator. Do not attempt to polarize the alternator.*

Voltage Regulator Air Gap

With the regulator removed from the

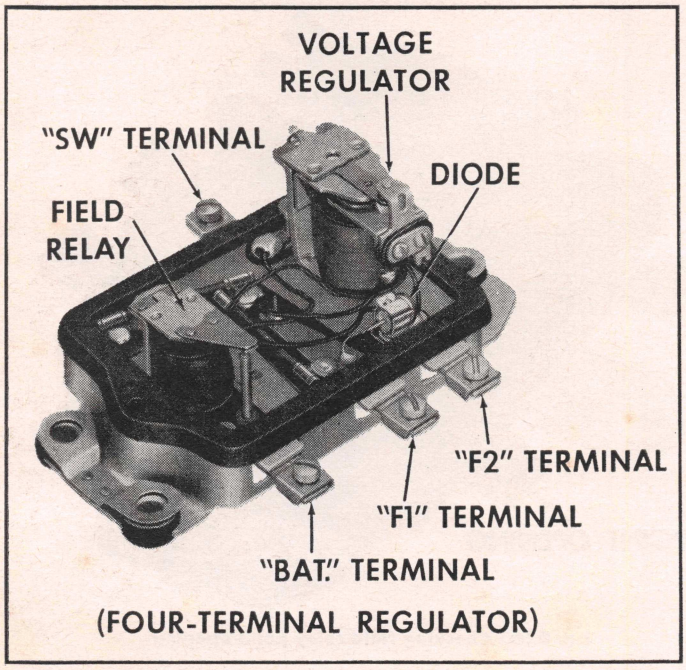

Fig. D29 Delco-Remy transistorized regulator of the four-terminal type used when vehicle has an ammeter

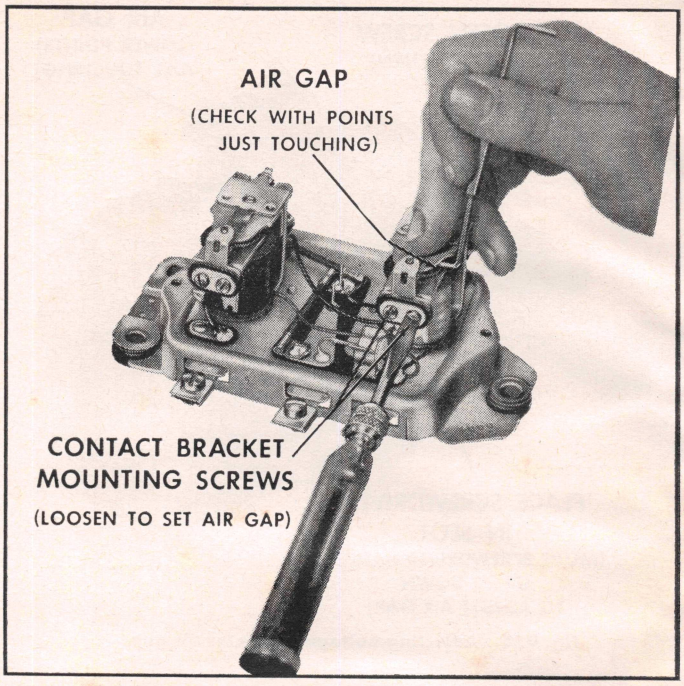

Fig. D30 Adjusting voltage regulator air gap

vehicle, the air gap may be adjusted as shown in Fig. D30. Push the armature down against the wire gauge and adjust the upper contact support so that the contacts are aligned squarely and just touch when the contact support screws are tightened.

Voltage Setting

The voltage at which the regulator operates varies with changes in regulator ambient temperature. The ambient temperature is the temperature of the air measured with a thermometer ¼" from the regulator cover.

Fig. D31 will aid in making the desired voltage setting. To check and adjust the voltage setting, proceed as follows:

1. Make connections as shown in Fig. D32.
2. With ignition switch on, operate alternator at 3000 rpm for 15 minutes with 3 to 10 amperes output. Use a ¼-ohm resistor in series *between battery and junction block* if necessary to reduce output to 10 amperes or less. Leave cover on regulator.
3. After the 15 minute warm-up period, cycle the alternator by turning off the ignition switch and stopping the

REGULATOR AMBIENT TEMPERATURE	VOLTAGE			
145°F	12.7	12.9	13.1	13.3
125°F	13.0	13.2	13.4	13.6
105°F	13.3	13.5	13.7	13.9
85°F	13.6	13.8	14.0*	14.2
65°F	13.9	14.1	14.3	14.5
45°F	14.2	14.4	14.6	14.8
25°F	14.5	14.7	14.9	15.1
	NORMAL SPECIFICATION RANGE			

INDICATES PUBLISHED SPECIFICATIONS

EXAMPLE:

* VOLTAGE REGULATOR SETTING OF 14.0 VOLTS @ 85°

13.1 VOLTS @ 145°
13.4 VOLTS @ 125°
13.7 VOLTS @ 105°
14.3 VOLTS @ 65°
14.6 VOLTS @ 45°
14.9 VOLTS @ 25°

Fig. D31 Voltage regulator voltage and temperature factors

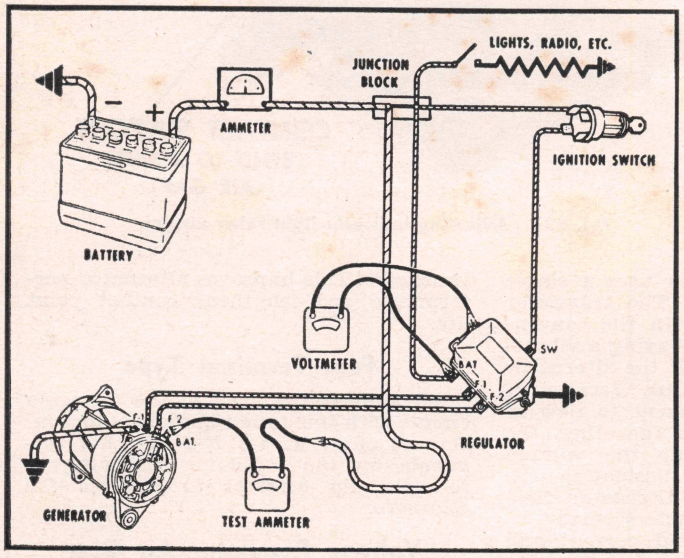

Fig. D32 Checking voltage setting on four-terminal regulator

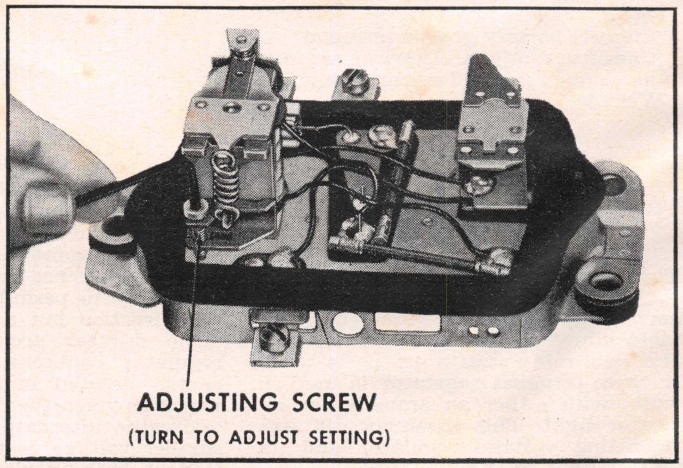

Fig. D33 Adjusting voltage regulator setting

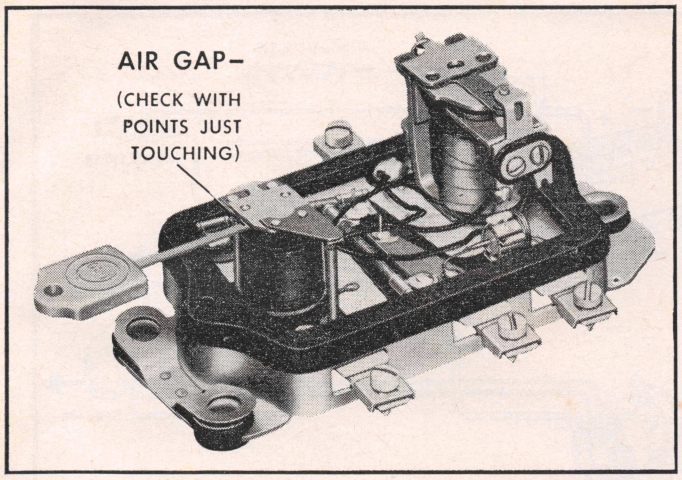

Fig. D34 Checking field relay air gap

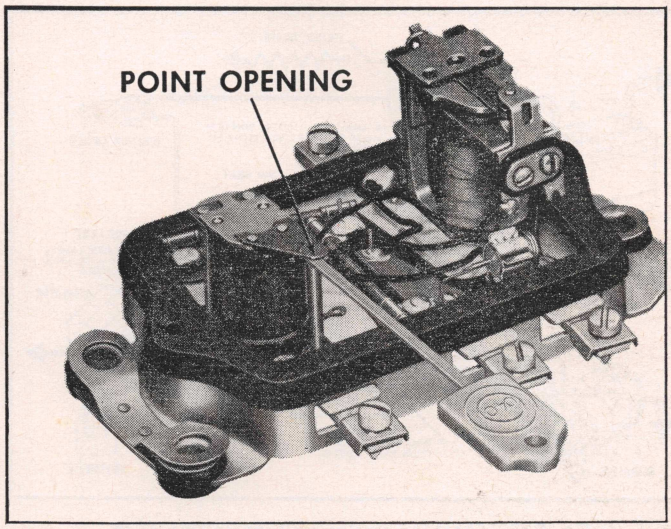

Fig. D35 Checking field relay point opening

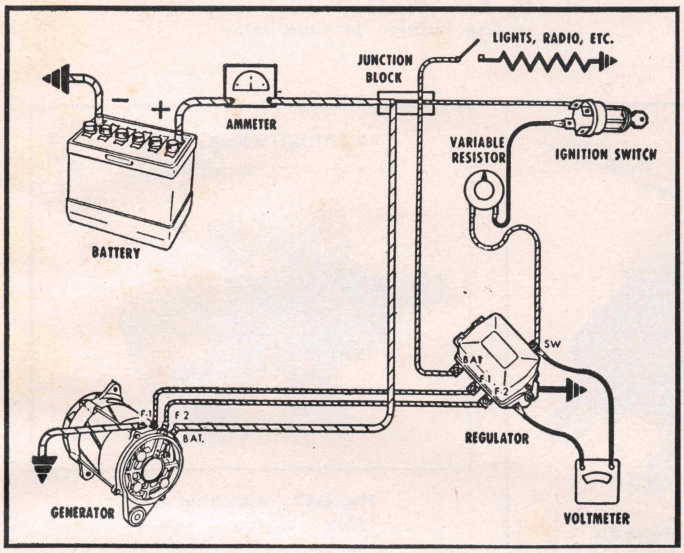

Fig. D36 Checking field relay closing voltage on four-terminal regulator

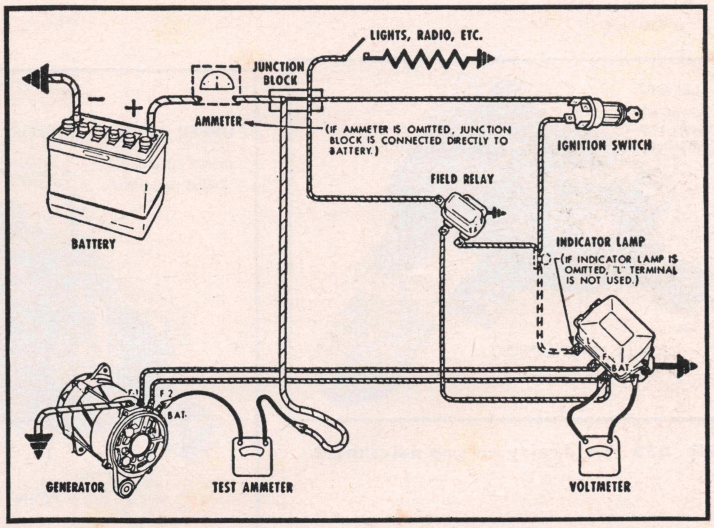

Fig. D37 Checking voltage regulator setting on three-terminal regulator

alternator; then re-run alternator at 3000 rpm and note voltage setting.

4. To adjust voltage setting, remove cover and turn screw on back of regulator as shown in Fig. D33. *Caution: Always make final setting by turning screw clockwise. This insures that the spring holder will be against the head of the screw. After turning screw counterclockwise, pry holder up against screw head, then turn clockwise to make setting.*
5. After making setting, cycle the alternator by turning off the ignition switch and stopping the alternator.
6. Turn on ignition switch, operate alternator at 3000 rpm and note voltage setting. Readjust if necessary,
7. Always cycle the generator before reading the final voltage setting on the voltmeter. When decreasing the voltage setting, the alternator output may decrease to the 3 amperes minimum allowable, or even to no output. If this happens, load the battery with a carbon pile rheostat connected across its posts, or turn on electrical accessories in order to obtain the 3 to 10 amperes alternator output when adjusting the voltage setting.

Field Relay Unit

Air-Gap—With the regulator removed from the vehicle, check the air gap with the points just touching as shown in Fig. D34. The air gap normally need not be adjusted. If the point opening and closing voltage are within specifications, the relay will operate satisfactorily even though the air gap may not be exactly according to specifications.

Point Opening — The point opening is checked as shown in Fig. D35. If adjustment is necessary, carefully bend the flat contact spring support.

Closing Voltage—The closing voltage of the field relay should be checked immediately after the voltage regulator setting check, before the unit has had time to cool off. Check closing voltage as follows:

1. Make connections as shown in Fig. D36, using a 50 ohm variable resistor.
2. Turn resistor to "open" position.
3. Turn ignition switch on.
4. Slowly decrease resistance and note closing voltage of relay. Adjust by bending heel iron.

Three Terminal Type

Caution: Do not short across F and Bat terminals on the regulator, or F-1 and F-2 terminals on alternator. Do not attempt to polarize alternator.

Voltage Regulator Unit

The air gap and voltage settings are made the same as outlined for the four-terminal regulator. To check the voltage setting, connect the ammeter in the circuit at the "BAT" terminal of the alternator, and the voltmeter from the "BAT" terminal of the regulator to the regulator base, Fig. D37. Adjust as shown in Fig. D33.

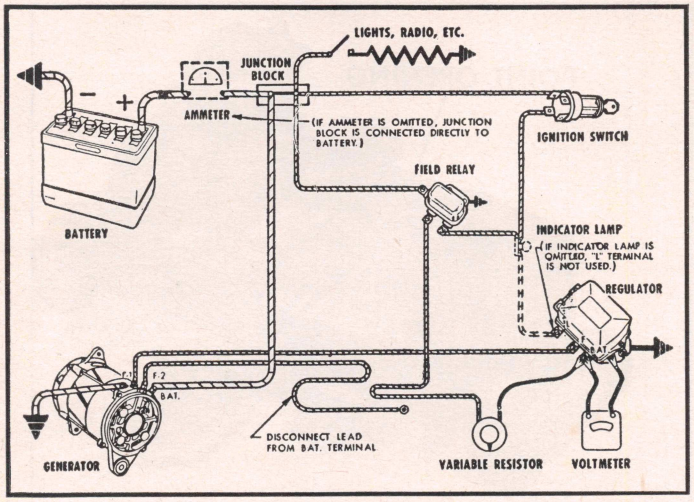

Fig. D38 Checking closing voltage setting of indicator light relay on three-terminal regulator

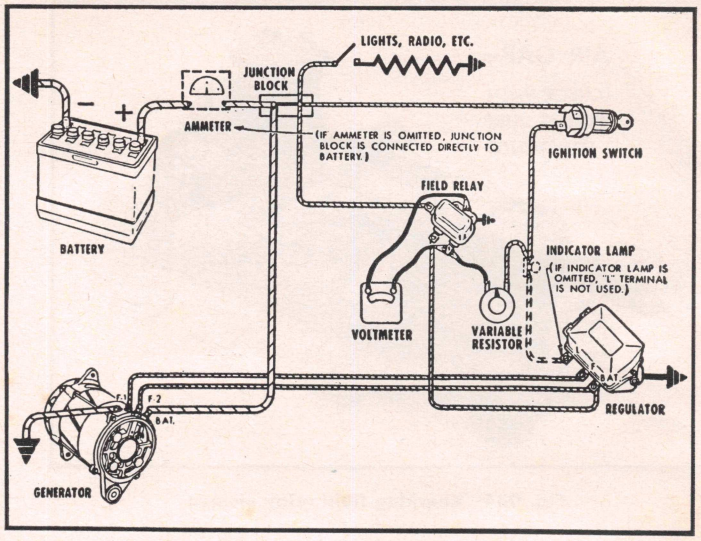

Fig. D41 Checking closing and sealing voltage of field relay

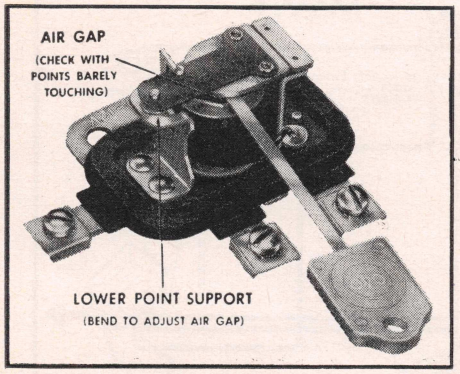

Fig. D39 Field relay air gap adjustment

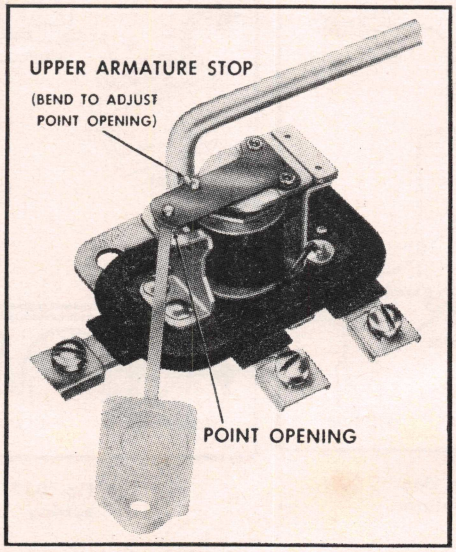

Fig. D40 Field relay point opening adjustment

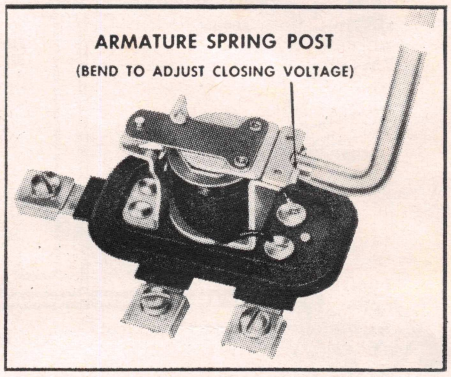

Fig. D42 Adjusting field relay closing voltage

Indicator Light Relay Unit

Air Gap—The air gap is checked and adjusted in the same manner as outlined for the four-terminal regulator unit (see Fig. D30).

Closing Voltage—This check must be made immediately after the voltage regulator setting check, before the regulator has had time to cool off.

1. Make connections as shown in Fig. D38, using a 50 ohm variable resistor. *Do not operate alternator with resistor in the circuit.*
2. Turn resistor to "off" position.
3. Turn ignition switch on. The battery must be sufficiently charged to cause the contacts to open at the "off" position of the resistor.
4. Slowly increase resistance and note voltage at which contacts close.
5. Adjustment procedure is identical to that of the four-terminal regulator (see Fig. D33).

Separately Mounted Field Relay

Air Gap—Check the air gap as shown in Fig. D39. Push the upper contact down until points just touch, and adjust the air gap between armature and core by bending lower contact support.

Point Opening — The point opening is checked and adjusted as shown in Fig. D40. To adjust, bend armature stop with suitable bending tool.

Closing Voltage—Make connections as shown in Fig. D41. Then proceed as follows:

1. Turn resistor to "open" position.
2. Turn on ignition switch.
3. Slowly decrease resistance and note voltage at which points just close.
4. To adjust, bend armature spring, post, Fig. D42.

Sealing Votlage—After points have just closed in the closing voltage check above, continue to decrease the resistance and not the voltage at which armature seals to the core. To adjust, slightly decrease the air gap by bending the lower contact support. *Remember to adjust point opening after changing the air gap.*

FORD ALTERNATORS

TESTING SYSTEM IN VEHICLE

Alternator Output Test

1. Make connections as shown in Fig. F2. Be sure that the Generator Field Control is in the "open" position at the start of this test.
2. Close the battery adapter switch. Start the engine, then open the battery adapter switch. *All electrical accessories, including door operated interior lights must be turned off.*
3. Carefully increase engine speed to a tachometer reading of 2900 rpm. *Do not exceed this speed.*
4. Adjust the Generator Field Control until the voltmeter reads exactly 15 volts. Observe the ammeter reading. Add 5 amperes to this reading to obtain total alternator output. The 5-ampere factor represents the field current and the ignition system current, and must be added to the ammeter reading as these currents are not indicated on the ammeter. *Make this test in the shortest possible time and do not exceed 2900 rpm. If the battery was fully charged, it might not be possible to obtain maximum current output. If specified current is not obtained, make the following test before condemning the alternator.*
5. Turn the Generator Field Control to the "open" position. Rotate the tester control knob to the "load" position. Maintain 2900 rpm engine speed.
6. Adjust the Generator Field Control and the "load" control, maintaining a voltmeter reading of 15 volts maximum, until the Generator Field Control is at its maximum clockwise position.
7. Readjust the "load" control until the voltmeter reads exactly 15 volts. Observe the ammeter reading. Add 5 amperes to this reading to obtain total alternator output.
8. Stop the engine, return the Generator Field Control to the "open" position and disconnect the test equipment.

Test Analysis

1. An output of 2 to 5 amperes below specifications indicates an open diode rectifier. An output of approximately 10 amperes below specifications indicates a shorted diode rectifier. *An alternator with a shorted diode will usually whine, which will be noticeable at idling speed.*
2. A shorted *positive* diode may sometimes be accompanied by alternate flashing of the oil pressure and charge indicator lights when the ignition switch is off. The field relay contacts will also be closed and the battery will be discharging through the field to ground.
3. Under this condition, the instrument constant voltage regulator will receive power through the charge indicator light. The operating of the constant voltage through the charge indicator light causes the alternate flashing of the lights. When the regulator contacts close, the oil pressure light becomes dim and the charge indicator light becomes bright. When the contacts open the oil pressure light becomes bright and the charge indicator light becomes dim.

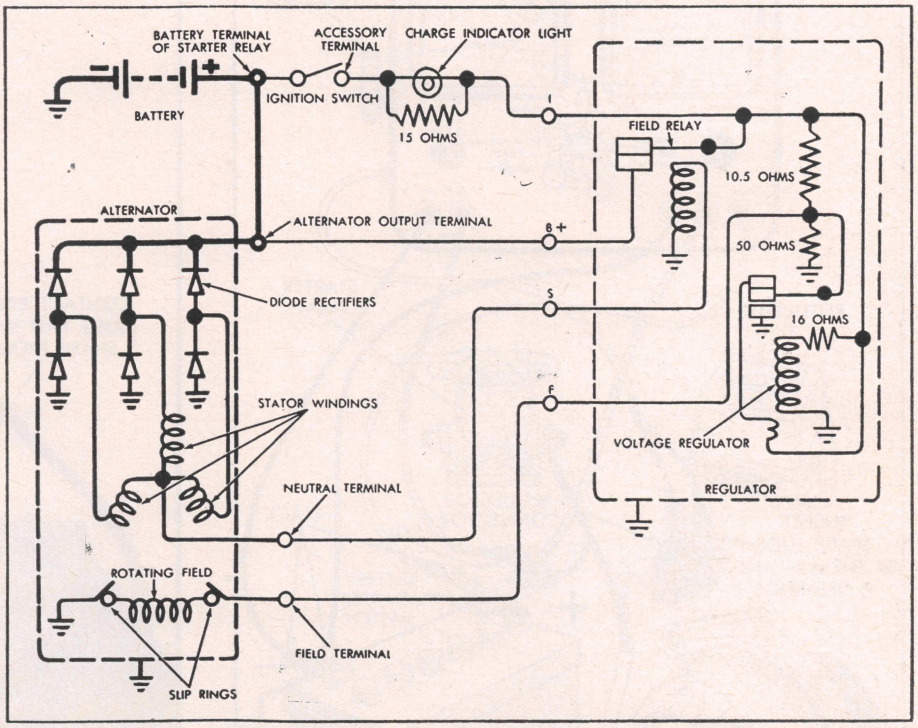

Fig. F1 Ford alternator wiring diagram

Diode Test

1. To test the positive diodes, make connections shown in Fig. F3. Connect the probe to each diode lead. Make sure that the tip of the probe is sharp and that it penetrates the varnish at the diode terminal.
2. To test the negative diodes, make the connections shown in Fig. F4. Follow the same procedure as for positive diodes.
3. Good diodes will be indicated as on the meter in Figs. F3 and F4, that is, 2 amperes or more and readings alike within 2 scale divisions.

Field Open or Short Circuit Test

1. Make connections as shown in Fig. F5. The normal current draw, as indicated by the ammeter, should be as specified in the *Alternator and Regulator Specifications* chart in the truck chapters.
2. If there is little or no current flow, the field has a high resistance or is open, or the brushes are not making proper contact with the slip rings.
3. A current flow considerably higher than that specified (usually 2.9 to 3.1 at 12 volts) indicates shorted or grounded turns.
4. If the test shows that the field is shorted, *and the field brush assembly is not at fault,* the entire rotor must be replaced.

Field Relay Supply Voltage Test

The regulator field relay will close only if the voltage supplied by the neutral terminal of the alternator is sufficient to operate the relay. The wiring from the alternator neutral terminal to the relay "S" terminal also must be intact. The following test will show that both sufficient voltage is available and that the wiring is in good condition.

1. Remove the connector plug from the regulator, remove the regulator, then reinstall the connector plug.
2. Connect the negative voltmeter lead to ground. Start the engine and operate it at 400 to 500 rpm.
3. Connect the positive voltmeter lead to a small screwdriver. Touch the screwdriver to the center rivet at the front of the regulator. *Use care to touch only the rivet or the rivet terminal so as not to short this point to ground or to the other nearby terminals.* The voltmeter should indicate at least 6 volts, and the relay contacts should be closed.
4. Low voltage at this point can be caused by a defective alternator or defective wiring.

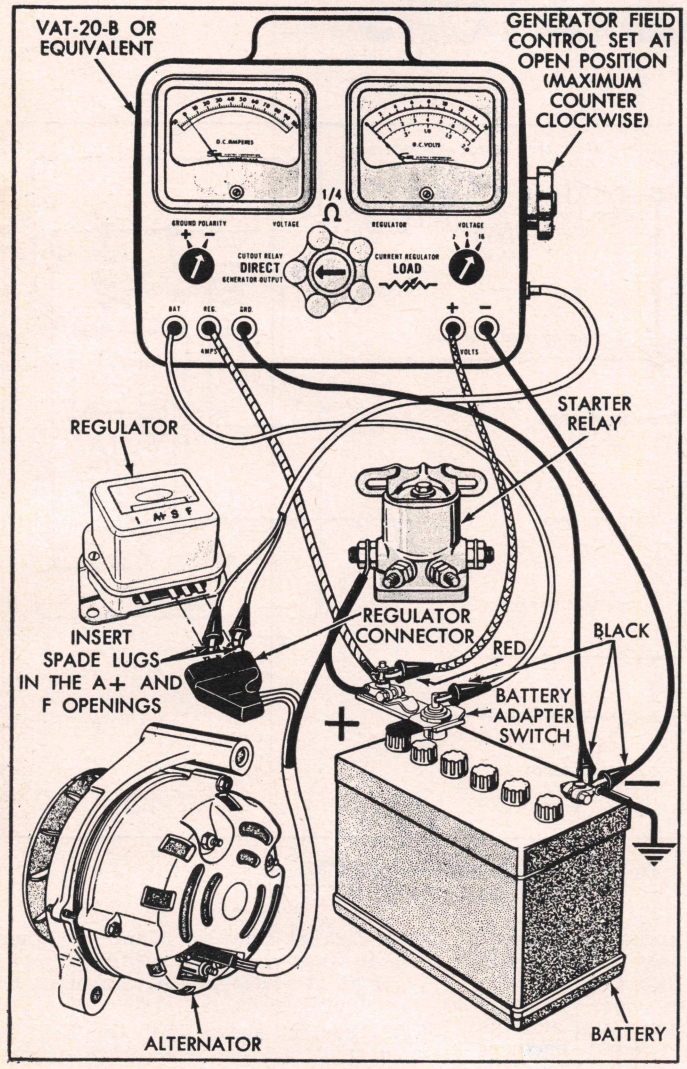

Fig. F2 Alternator output test

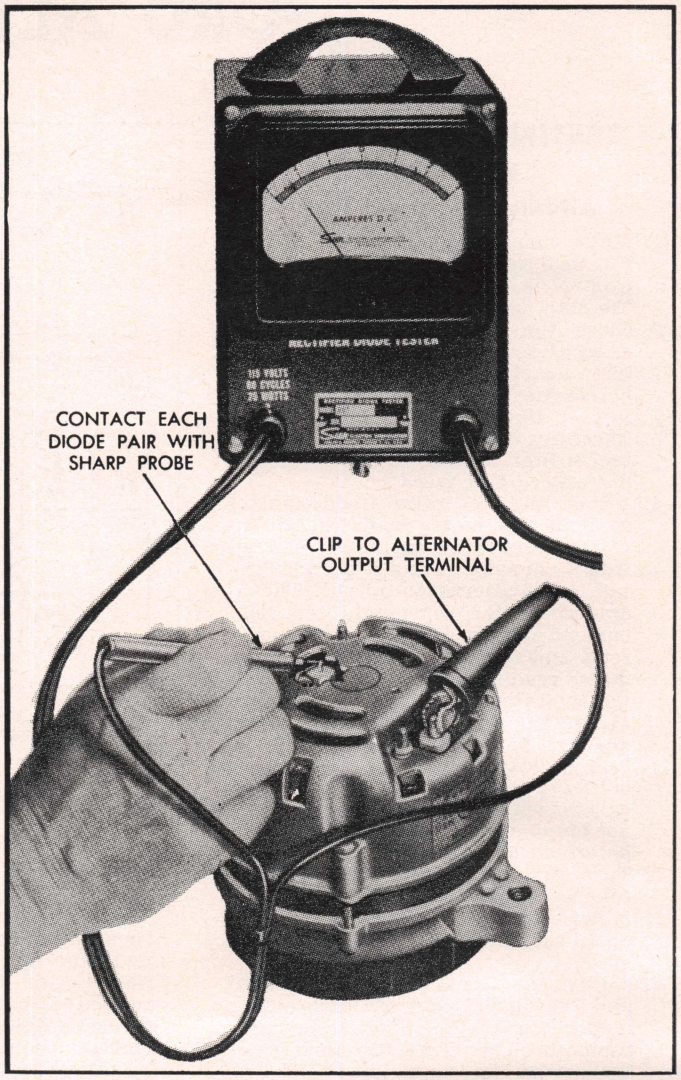

Fig. F3 Positive diode test

REGULATOR TESTS

The following tests are to be made with the regulator in the vehicle. Be sure that the regulator is at "normal" operating temperature. This is equivalent to the temperature after 20 minutes of operation with a 10-ampere load.

Field Relay Test

1. Disconnect regulator terminal plug and remove the regulator cover.
2. Make connections shown in Fig. F6.
3. Slowly rotate field resistance control clockwise from the off position until the field relay contacts close.
4. Observe the voltmeter reading at the moment that the relay closes. This is the relay closing voltage.
5. If the relay closes immediately, even with the field resistance close to the "off" position, use a 6 volt battery for this test.
6. If the closing voltage is not within specifications, adjust the relay.

Voltage Limiter Test

For test purposes, the lower stage regulation is used (armature vibrating of the lower contact). Voltage limiter calibration test must be made with the regulator cover in place and the regulator at "normal" operating temperature (equivalent to temperature after 20 minutes of operation with a 10-ampere load).

1. Make test connections shown in Fig. F7.
2. Turn off all accessories, including door-operated dome lights.
3. Close battery adapter switch, start engine, then open adapter switch.
4. Attach the voltage regulation thermometer to regulator cover.
5. Operate engine at 200 rpm for 5 minutes. Turn master control to "direct" position.
6. If the ammeter indicates more than 10 amperes, remove battery cables and charge the battery.
7. When battery is fully charged, and the voltage regulator has been temperature stabilized, rotate the master control to the "Voltage Reg." position, the ammeter should indicate less than 2 amperes.
8. Cycle the regulator as follows: Stop engine, close adapter switch, start engine, and open adapter switch.
9. Allow battery to normalize for a short time, then read the voltmeter.
10. Read the thermometer, and compare the voltmeter reading with the voltage given in Fig. F8.
11. If the regulated voltage is not within specifications, make a voltage limiter adjustment. *After each adjustment, be sure to cycle the regulator before each reading. Readings must be made with cover in place.*

Circuit Resistance Test

For the purpose of this test, the resistance values of the circuits have been converted to voltage drop readings for a curent flow of 20 amperes.

Alternator to Battery Positive Terminal

1. Make connections shown in Fig. F9.
2. Turn off all lights and electrical accessories.
3. Close battery adapter switch, start engine, then open battery adapter switch.
4. Slowly increase engine speed until ammeter reads 20 amperes.
5. Voltage should be no greater than 0.3 volts.

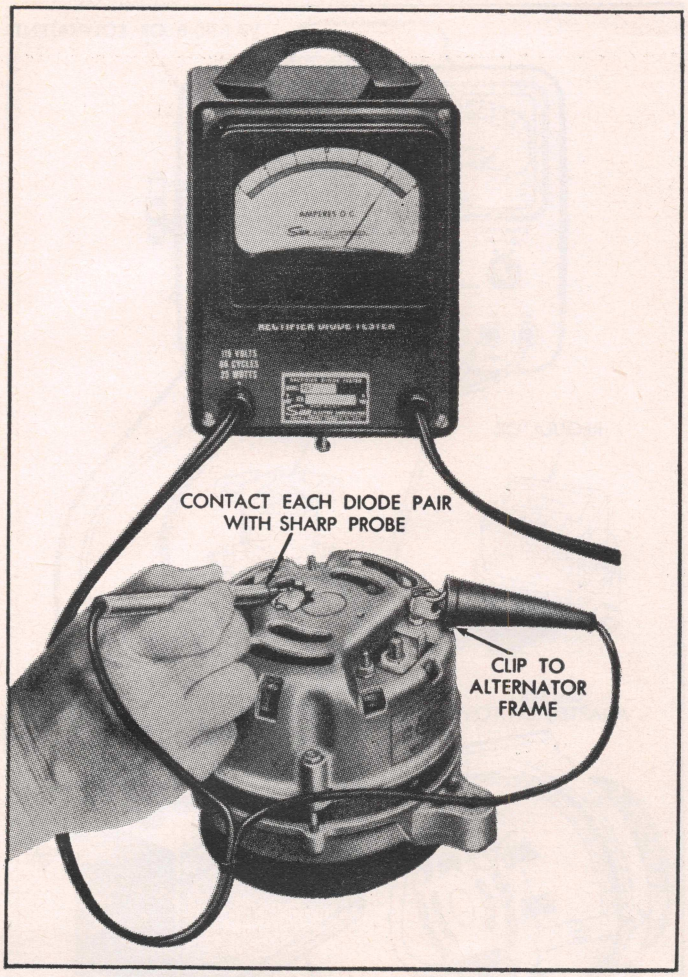

Fig. F4 Negative diode test

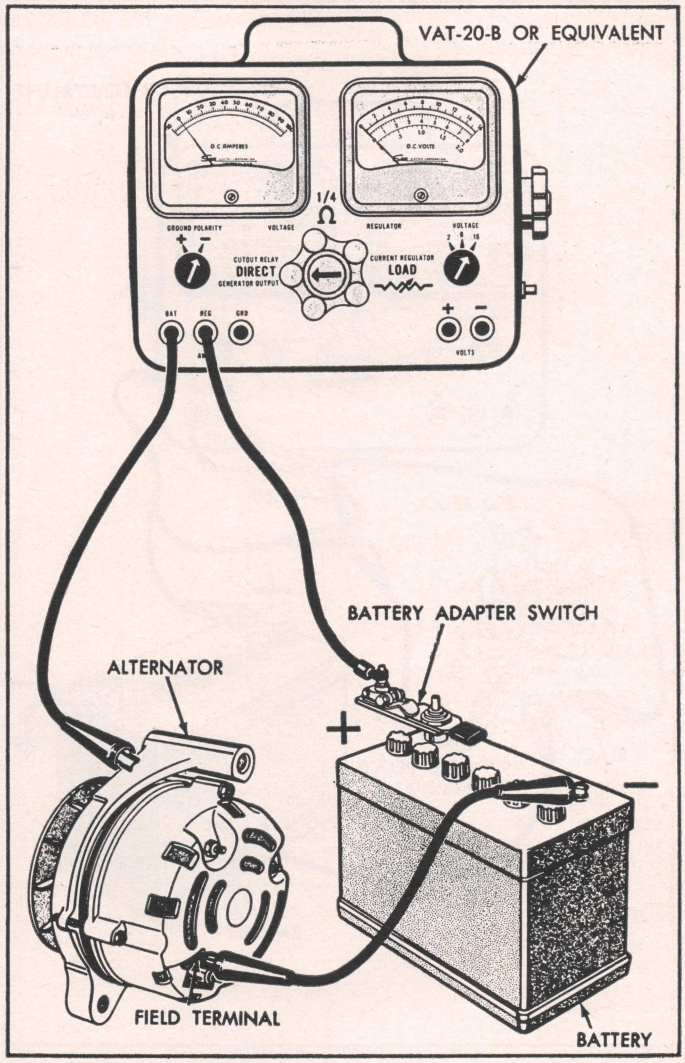

Fig. F5 Field open or short circuit test

Alternator to Battery Ground Terminal

1. Make connections shown in Fig. F10.
2. Close battery adapter switch, start engine and open battery adapter switch.
3. Slowly increase engine speed until ammeter reads 20 amperes.
4. Voltage indicated should be less than 0.1 volt.

REGULATOR ADJUSTMENTS

Erratic operation of the regulator, indicated by erratic movement of the voltmeter during a voltage limiter test, may be caused by dirty or pitted regulator contacts.

Use a very fine abrasive paper such as silicone carbide, 400 grade, to clean the contacts. Wear off the sharp edges of the abrasive by rubbing against another piece of abrasive paper. Fold the abrasive paper over and pull it through the contacts to clean them. Keep all oil or grease from contacting the points. *Do not use compressed air to clean the regulator. When adjusting the gap spacing, use only hospital clean feeler gauges.*

Regulator Bench Adjustments

The difference between the upper stage and lower stage regulation (0.3 volt), is determined by voltage limiter point and core gaps.

Adjust point gap first. Referring to Fig. F11, loosen the left side lock screw ¼ turn. Use a screwdriver blade in the adjustment slot above the lock screw. Adjust the upper contact until there is .010 to .015″ gap between lower contacts. Tighten lock screw and recheck the gap.

To adjust the core gap, loosen the center lockscrew ¼ turn. Use a screwdriver blade in the slot under the lock screw. Adjust the core gap to .045 to .052″ clearance between armature and core at edge of core closest to contact points. Tighten lock screw and recheck core gap.

Regulator Voltage Adjustments

Final adjustment of the regulator must be made with the regulator at operating temperature.

The field relay closing voltage is adjusted by bending the spring arm, Fig. F11. To increase the closing voltage, bend the spring arm down. To decrease the closing voltage, bend the spring arm up.

The voltage limit is adjusted by bending the voltage limiter spring arm, Fig. F11. To increase the voltage bend the adjusting arm downward. To decrease the setting, bend the adjusting arm upward.

Before setting the voltage and before making a final voltage test, the alternator speed must be reduced to zero and the ignition switch opened momentarily to cycle the regulator.

ALTERNATOR REPAIRS

Disassembly

1. Mark both end housings with a scribe mark for reassembly. Reach through a ventilation slot, raise both brushes off slip rings and install a short length of ⅛″ rod or stiff wire through hole in rear end housing, Fig. F12, to hold brushes off slip rings.
2. Remove 3 housing through bolts and separate front housing and rotor from rear housing and stator. *Make certain that brushes do not contact the greasy rotor shaft.*
3. Remove nuts from rectifier-to-rear housing studs and remove rear hous-

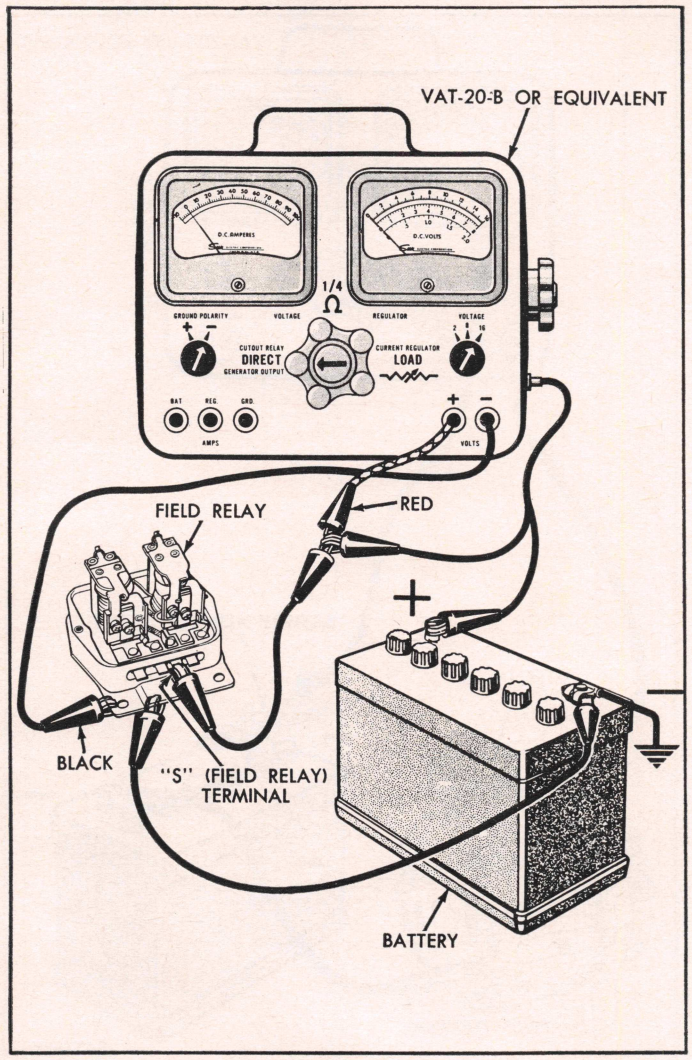

Fig. F6 Field relay test

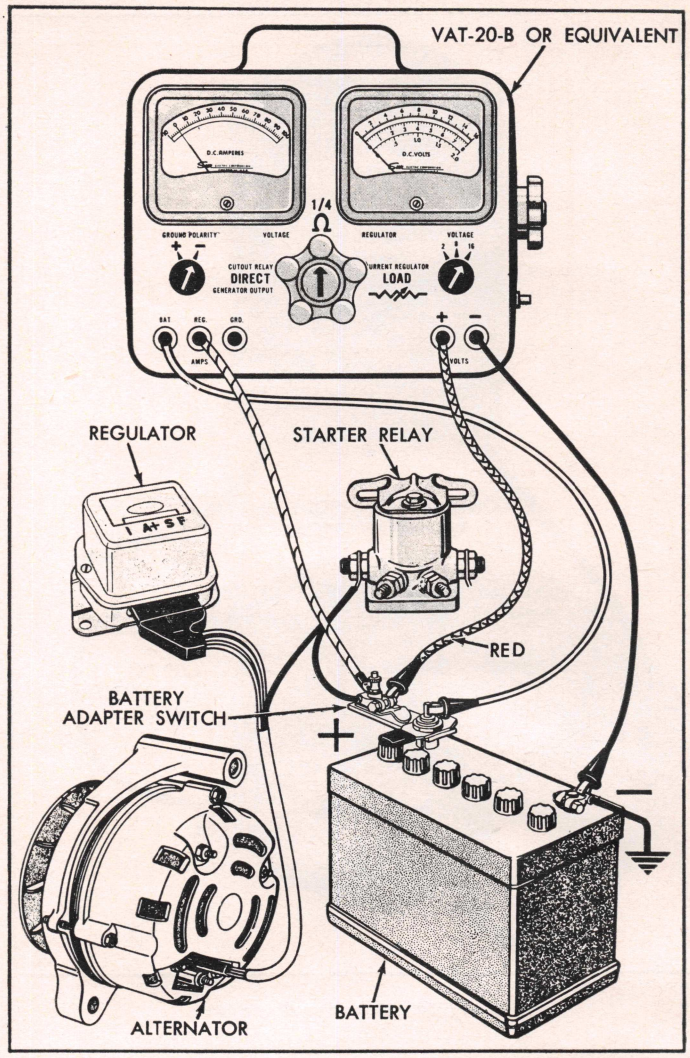

Fig. F7 Voltage limiter test

ing. Remove two spacer sleeves from rectifier plate studs.

4. Press bearing from rear end housing, Fig. F13.
5. Remove terminal spacer block from studs and unsolder neutral wire from spacer block neutral terminal.
6. If brushes are being replaced, straighten field brush, terminal blade locking tabs with a pair of pliers and remove terminal blade from terminal spacer block assembly. Remove brushes and holders.
7. If either diode plate is being replaced, carefully unsolder leads from diodes, Fig. F14. Use only a 100 watt soldering iron. Leave the soldering iron in contact with the diode terminals only long enough to remove the wires. Both pliers are used as temporary heat sinks in order to protect diodes. *Excessive heat can damage a good diode.*
8. Remove 3 insulated diode plate screws and insulators, and separate diode plates.
9. Remove drive pulley, Fig. F15.
10. Remove 3 screws that hold front bearing retainer and remove front housing.
11. If the bearing is being replaced, remove it as shown in Fig. F16. Remove bearing retainer and spacer. It will not be necessary to remove the stop ring unless it has been damaged.

Inspection

1. The rotor, stator, diodes and bearings are not to be cleaned with solvents. These parts are to be wiped off with a clean cloth. Cleaning solvent may cause damage to electrical parts or contaminate the bearing internal lubricant. Wash all other parts with solvent and dry them.

Voltage Regulation Setting (Volts)	Ambient Air Temperature °F
14.3-15.1	50
14.1-14.9	75
13.9-14.7	100
13.8-14.6	125
13.6-14.4	150
13.5-14.3	175

Fig. F8 Voltage regulation and ambient air temperature factors

2. Rotate front bearing on drive shaft. Check for any scraping noise, looseness or roughness that would indicate that the bearing is excessively worn. As the bearing is being rotated, look for any lubricant leakage. If any of these conditions exist, replace the bearing.
3. Place the rear end bearing on the slip ring end of the shaft and rotate the bearing on the shaft. Make the same check for wear or damage as for the front bearing.
4. Check the housings for cracks. Check the front housing for stripped threads in the mounting holes. Replace defective housings.
5. Pulleys that have been removed and installed several times may have to be replaced because of the increased bore diameter. A pulley is not suitable for reuse if more than ¼ of the shaft length will enter the pulley bore with light pressure. Replace any pulley that is bent out of shape. After installing the pulley, check for clearance between the fins and the alternator drive end housing.
6. Check all wire leads on both stator and rotor for loose soldered con-

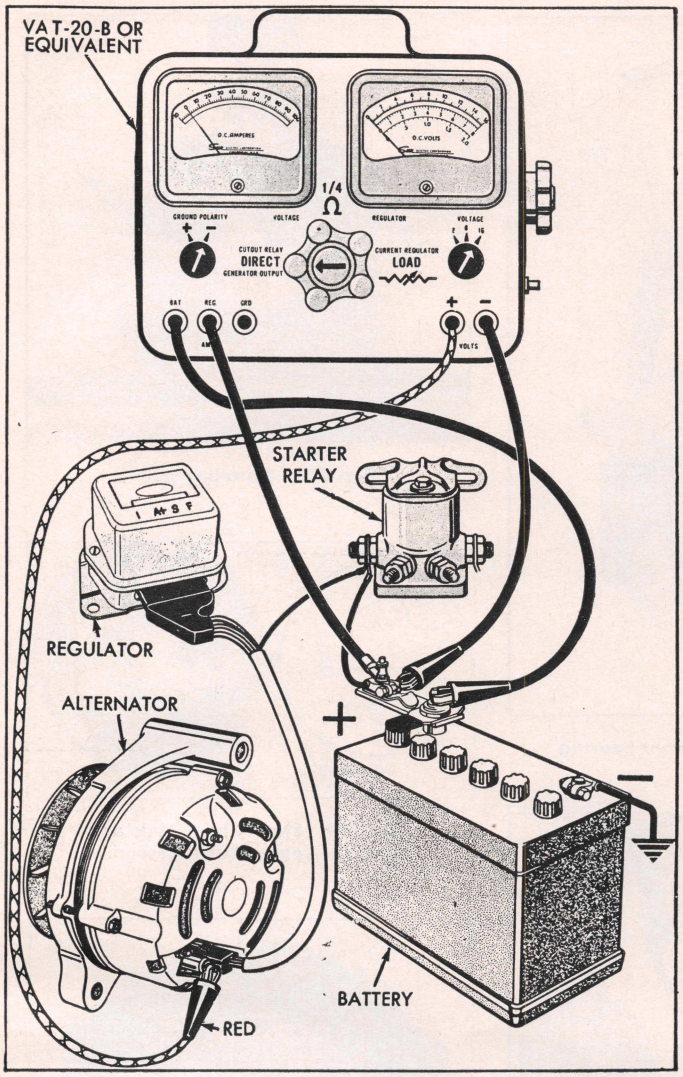

Fig. F9 Voltage drop test from alternator to battery positive terminal

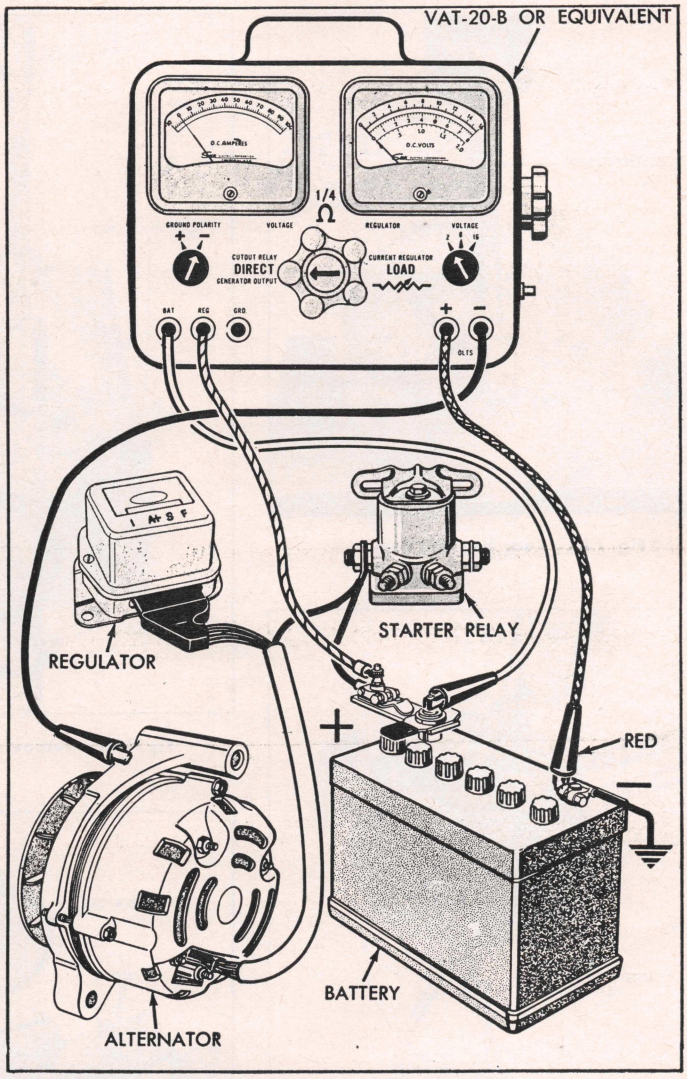

Fig. F10 Voltage drop test from alternator to battery negative terminal

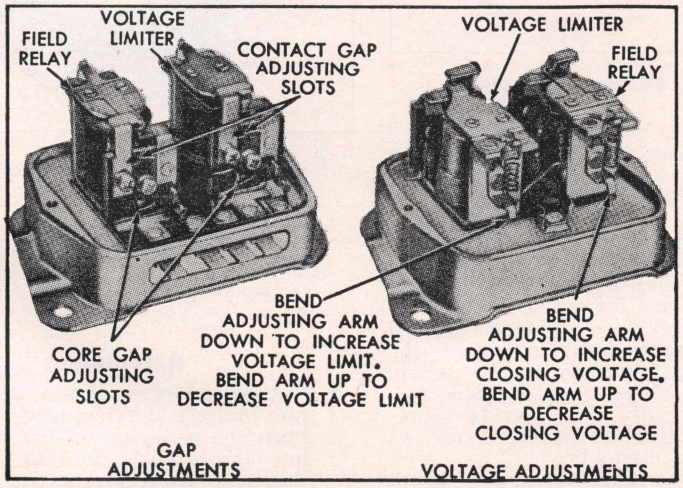

Fig. F11 Regulator adjustments

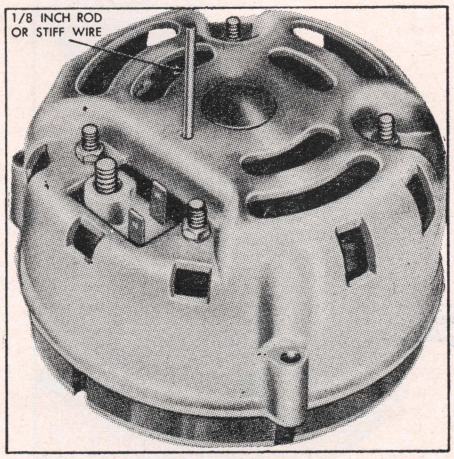

Fig. F12 Retracting alternator brushes

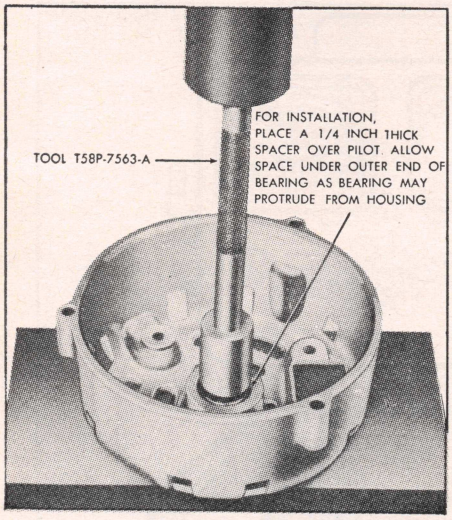

Fig. F13 Rear bearing removal

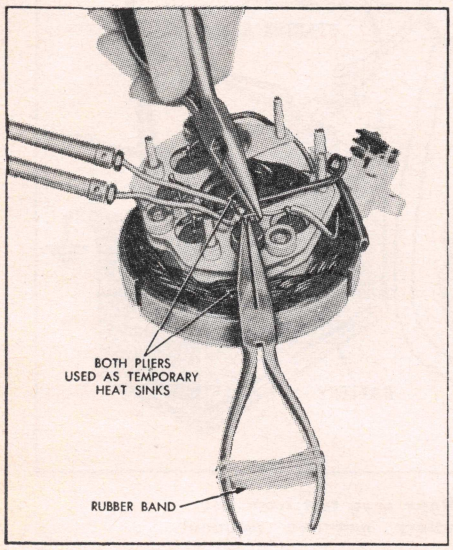

Fig. F14 Soldering diode leads

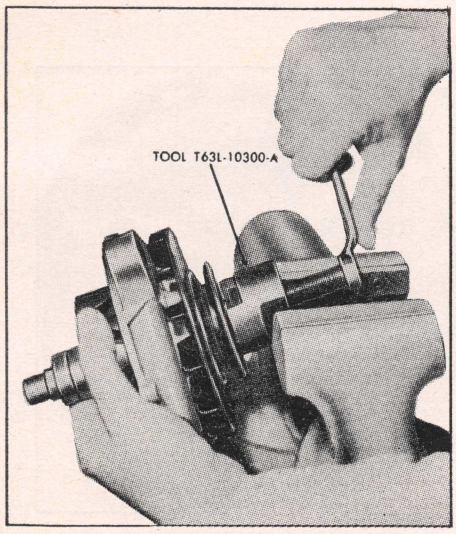

Fig. F15 Removing pulley

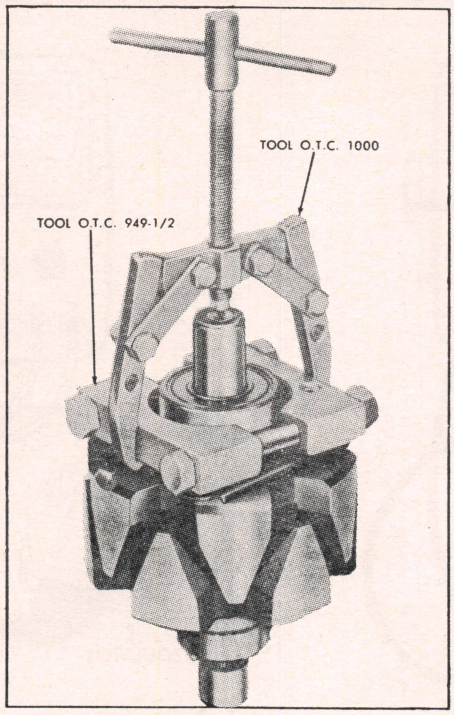

Fig. F16 Removing front bearing

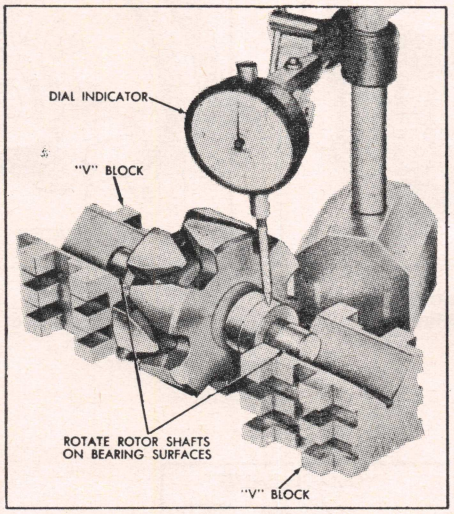

Fig. F17 Slip ring runout check

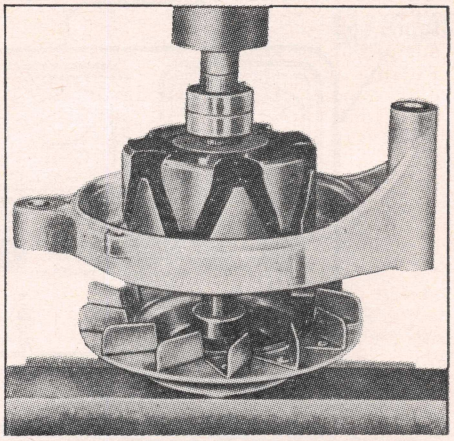

Fig. F18 Installing pulley

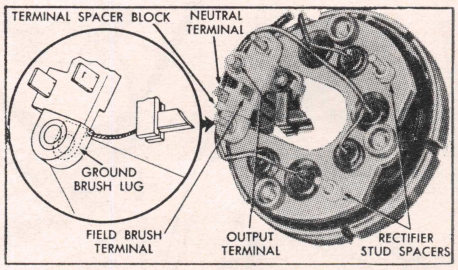

Fig. F19 Stator, heat sink and terminal spacer block assembly

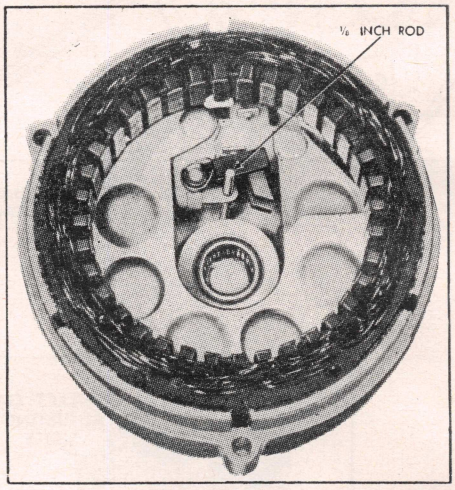

Fig. F20 Brushes retracted for assembly

nections and for burned insulation. Resolder poor connections and replace parts that show burned insulation.

7. Check slip rings for damaged insulation. Check the slip rings for runout as shown in Fig. F17. If the slip rings are more than .0005″ out of round, take a light cut (minimum diameter limit ½″) from the face of the rings to true them up. If the slip rings are badly damaged, the entire rotor will have to be replaced as they are serviced only as a complete assembly.
8. Replace the terminal spacer block assembly if the neutral terminal is loose. Replace any parts that are burned or cracked. Replace brushes that are worn to less than .350″ in length. Replace the brush spring if it has less than 7 to 12 ounces tension.

Assembly

1. If the stop ring on the drive shaft was broken, install a new stop ring. Push the new ring on the shaft and into the groove. *Do not open the ring with snap ring pliers.*
2. Position the front bearing spacer on the drive shaft against the stop

ring, and position the bearing retainer on the shaft with the flat surface of the retainer outward.

3. Putting pressure on the inner race only, press the new bearing on the shaft until it contacts the spacer.
4. Place the front housing over the shaft with the bearing positioned in the front housing cavity. Install the bearing retainer mounting screws.
5. Press the pulley onto the shaft until the hub just touches the inner race of the front bearing. Fig. 18. *A new pulley must be installed if more than ¼ of the shaft length will enter the old pulley bore with light pressure.*
6. If a new diode plate is being installed, mount the two plates together so that they are insulated from each other, Fig. F19. Solder the wire leads to the diodes as shown in Fig. F14, using only a 100 watt iron. *Avoid excessive heat as this can result to damage to the diode.*
7. Insert the new field brush terminal blade into the slot in the terminal spacer block with the brush pigtail extending toward the brush holder pivots, Fig. F19.
8. Install brush holders and brush spring to terminal block, then position brushes in holders.
9. Solder the neutral wire to its terminal. Position terminal spacer block on rectifier plate mounting studs, with the ground brush lug over the mounting stud farthest from the output terminal, Fig. F19.
10. Place spacers on rectifier mounting studs farthest from terminal block.
11. Install rear bearing so that its open end is flush with the inner surface of the housing boss, Fig. F13. Allow for space under the outer end of the bearing during installation.
12. Place rear end housing over rectifier plate and stator assembly and mount rectifier plates to housing.
13. Retract brushes and insert a short piece of ⅛" rod or stiff wire through hole in rear end housing to hold brushes in retracted position, Fig. F20.
14. Wipe clean the rear bearing surface of the rotor shaft.
15. Position rear housing and stator assembly over rotor and, after aligning marks made during disassembly, install housing through bolts. Remove brush retracting rod.

Leece-Neville System

SERIES 6000

The two-element regulator used with these alternators consists of a voltage regulator and a load relay which is connected to the auxiliary terminal on the ignition switch, Fig. L1. The load relay, controlled by the ignition switch, functions as a reverse current relay. When the ignition switch is turned on, the relay contacts close to energize the field coil in the alternator.

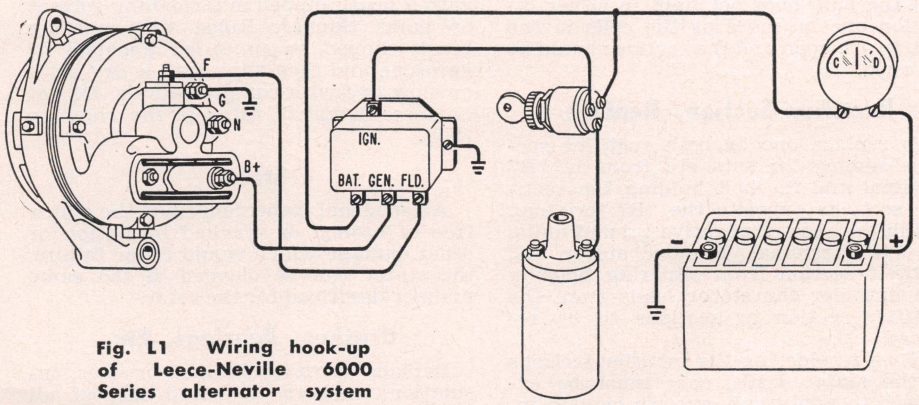

Fig. L1 Wiring hook-up of Leece-Neville 6000 Series alternator system

TESTING SYSTEM IN VEHICLE

With the engine at idle speed, remove the "F" lead from the alternator and attach a jumper wire from the "F" terminal to the "B" terminal. This jumper connection will take the regulator out of the circuit and allow the alternator to operate at full field strength.

If the alternator shows a high rate of charge when running with full field strength, the alternator is functioning and the problem lies with the regulator, system wiring or battery.

If the alternator shows a very low or no rate of charge when running with full field strength, the alternator will have to be removed from the engine and checked as outlined below if the system wiring and battery are good.

BENCH TESTS

1. Remove pulley, fan and spacer from shaft. Remove brushes. Remove through bolts holding unit together and remove drive end housing and rotor assembly.
2. To test the rotor without removing it from end housing, measure the resistance of the coil by placing the prods of an ohmmeter on the slip rings. If the meter reads from 3.8 to 4.2 ohms the rotor is good. If very little resistance is read, it would indicate a possible shorted coil circuit. Check for loose or broken wire at the slip rings. If no resistance is read, the coil is open. Should no loose or broken wires be detected at the slip rings, the short or open is within the rotor coils and the rotor is beyond repair.
3. Upon removal of the brushes it is found that the brush springs are collapsed, the rotor has a shorted coil and the rotor should be replaced.
4. Check the slip ring brushes or springs. If the brushes or springs are cracked, broken or burned, they should be replaced. Brushes worn to a length less than $\frac{3}{16}$" are too short and must be replaced.
5. If the rotor checks good, the stator and rectifier sections should be tested. This can be accomplished without removing the stator and rectifier sections from the slip ring end housing.

Rectifier Tests On Units Having An "N" Terminal

Place the positive prod of an ohmmeter on the "N" terminal at the slip ring end housing and the negative prod on the "B" terminal. With the prods in this position, the meter will read approximately 4 to 5 ohms and indicate that this is the positive section rectifiers. With the prods reversed, the meter needle will read infinity (excessive resistance) which will indicate that the rectifiers are good. Color coding on bottom of rectifiers is red.

Place the negative prod of the ohmmeter on the "N" terminal and the positive prod on the "GRD" terminal. The ohmmeter will read approximately 4 to 5 ohms and indicate that this is the negative ground section. Reversing the position of the prods will make the meter read infinity. Color coding on bottom of rectifiers is black.

Rectifier Test On Units Without "N" Terminal

Since there is no "N" (neutral) terminal, it will be necessary to make the tests at the rectifier sections.

Place the negative prod of an ohmmeter on any one of the three lead connections between the stator and rectifier cells. Place the positive prod on the heat sink of the insulated section of rectifiers. The meter should read 4 to 5 ohms. Reverse the prod position and the meter should read infinity and indicate that this is the positive or grounded section of rectifiers.

Place the positive prod on any one of the lead connections between stator and rectifier cells and the negative prod on the opposite heat sink. The meter should read 4 to 5 ohms. Reverse the prod positions and the meter will read infinity indicating that this is the negative rectifier section.

When making the above tests, if the meter readings do not fall in the category mentioned above, one or more of the rectifiers in the section are not operating properly and the section should be replaced. When replacing rectifiers, be certain that the correct section is grounded.

Alternate Rectifier Test

If an ohmmeter is not available a #57 bulb may be used to test the silicon rectifiers. This test is basically the same except that the bulb and battery replaces the ohmmeter.

If the bulb lights in one direction only the rectifiers are good.

If the bulb lights in both directions one or more of the cells in the section are shorted and the section found bad should be replaced.

If the bulb does not light in either direction one or more of the cells in the section are open and the section should be replaced.

Rectifier Section, Replace

To replace one or both rectifier sections, remove the nuts, etc. from the "B" terminal and the bolt holding the rectifier sections opposite the "B" terminal, and in the case of negative ground units, the "N" terminal. Remove stator and rectifier section from slip ring housing and unsolder the stator leads from the rectifier section or sections to be replaced.

When resoldering the rectifier sections to the stator leads, care must be exercised to apply only enough heat to insure a good connection. Overheating may damage the rectifier cells.

Stator Ground Test

To ground test the stator it will be necessary to unsolder the AC stator leads from the rectifiers. Check each stator phase for grounds to the stator core. A 110 volt test lamp is used for this test. No circuit should be present.

Stator Winding Continuity Test

With the test lamp check the continuity of each of the three stator phases. Each phase should show a closed circuit.

DISASSEMBLY & INSPECTION

After the foregoing tests are completed and the part or parts found inoperative are replaced, the following inspection and cleaning of parts should be done.

Rotor

If the rotor has seen considerable service and the slip rings appear to be worn, they should be replaced. Check shaft threads. Press rotor from housing using an arbor press.

To disassemble rotor, unsolder both field coil leads from the slip rings and, using a small puller, carefully pull off the rings. In some cases it will be impossible to save the old slip rings due to the tight fit on the shaft.

To clean the rotor it may be washed with a brush dipped in a cleaning solvent or paint thinner. Rinse with another brush dipped in unleaded gasoline or kerosene and then wipe with a dry cloth or blow dry with compressed air. *Do not immerse complete rotor in the cleaning fluid.*

Stator

After visual inspection finds the stator free of broken or cracked insulation or other damage which would cause failure, the stator can be cleaned in the same manner described for the rotor.

Brushes, Bearings, Etc.

Replace worn or broken brushes, insulation washers, etc. and inspect all tapped holes for good threads. It is recommended that bearings be replaced at time of overhaul.

Remove bearing retainer screws and bearing retainer from drive end housing. Tap or press out bearing. With bearing removed, housing can be immersed in cleaning solvent or paint thinner for cleaning.

The slip ring end housing bearing needs no special tool for removal or replacement. It may be tapped or pressed out. However, a piece of fiber or similar material should be placed over the new bearing when installing to prevent damage.

REASSEMBLY

The alternator should be assembled in the reverse order of disassembly. Care should be exercised not to damage the housing pilots and stator windings. When completely assembled, spin the rotor by hand for free rotation check.

Reinstall the alternator on the vehicle and run it "full field" as outlined under Alternator System Check.

REGULATOR, ADJUST

Load Relay

To check the load relay, connect leads from a 12 volt battery to the ground and ignition terminals on the regulator, with a variable resistor in series with one lead. Connect a voltmeter across the "IGN" and "GRD" terminals.

Start with all the resistance cut in and then gradually decrease it to allow the voltmeter reading to rise. The load relay should close at .58 to 6.2 volts.

To raise the closing voltage, increase the spring tension by bending the lower arm of the spring bracket. To lower the closing voltage decrease the spring tension.

Voltage Regulator

To check the voltage regulator remove the cover. Connect one voltmeter lead to the regulator "BAT" terminal and the other lead to the regulator or alternator ground. Then connect a pair of earphones of not less than 1,000 ohms resistance to the "FLD" and "GEN" regulator terminals to hear the operation of the regulator contacts. *After each of the three steps in the test, open the ignition switch to bring the alternator speed to zero.*

1. Raise alternator speed slowly and listen for the vibration indicating the start of regulation on the upper contacts. This should start within the range of 13.9 and 14.3 volts. To increase the voltage, bend the lower

Prestolite Alternators

TESTING SYSTEM IN VEHICLE

Charging Circuit Resistance Test

1. Make connections as shown in Fig. P1.
2. Adjust engine speed and electrical load to obtain amperes in the charging circuit. The voltage drop in this circuit should not exceed .2 volt. If more, locate and correct cause of high resistance before proceeding with tests.
3. With the same operating conditions as in Step 2, connect voltmeter leads from ground battery terminal to alternator frame, and from alternator to regulator base. In neither case should the voltage reading exceed .04 volt. If more, locate and correct cause of high resistance ground connections.

Alternator Output Test

1. Make test connections as shown in Fig. P2. *Be sure rheostat is "Off" before connecting leads.*
2. Connect a tachometer, start engine and adjust its speed to 1750 rpm. Adjust rheostat to obtain 14.2 volts and observe ammeter reading. It should be as specified for the alternator being serviced.
3. If the alternator fails to reach rated output, it should be removed from the vehicle for repairs. A slightly low ammeter reading may indicate an open rectifier while a considerably lower reading may indicate a shorted rectifier.
4. If the output is only slightly low, a

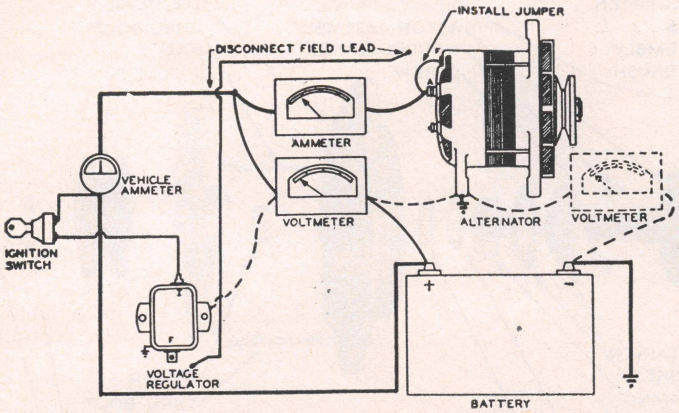

Fig. P1 Meter connections for testing voltage drop in charging circuit

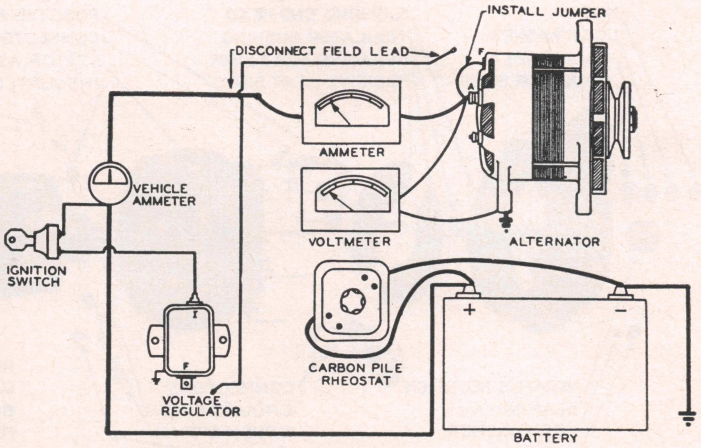

Fig. P2 Meter connections for testing alternator output

temperature check may be made to determine whether a rectifier is open. With the alternator operating as for the output test, place a bulb-type thermometer (250° scale) on the base of each rectifier heat sink for the rectifier bank being checked.

5. The rectifier temperature will normally be several degrees higher than the heat sink temperature. If the rectifier is open its temperature will be the same as that of the heat sink in which it is located.
6. If the rectifier is shorted the temperature of the entire heat sink in which it is located will be abnormally high.

Voltage Regulator Test

The first part of this test checks the operating voltage of the regulator when operating on the upper contact. Make test connections as shown in Fig. P3. *Be sure the ignition switch is off when connecting the field lead. Grounding of the field circuit while the ignition switch is on will damage the regulator.*

1. To test votage regulator setting, start engine and adjust its speed to 750 rpm. Turn on lights and accessories to obtain a 10-ampere charge rate. Operate the system at this speed and load for 15 minutes to normalize the temperature. (This regulator is temperature compensated.)
2. Cycle the system by stopping and restarting the engine; then note the voltmeter reading. If seriously out of adjustment a rough setting may be made. The final setting is not made until the "spread" between operation on the upper contact and operation on the lower contact is established. This value is determined in the next part of the test which checks voltage when the regulator is operating on the lower contact.
3. Test connections remain as for the previous part of the test. Increase engine speed to 1500 rpm and turn off all lights and accessories. Voltage should increase and amperage should decrease. The "spread" in voltage between this reading and the reading noted in the first part of the test should be from .1 to .3 volt.
4. If the "spread" is greater or less than specified, remove the regulator cover and adjust by loosening the stationary contact support screw and moving the support up or down. Raising the support will increase voltage "spread", and vice-versa.
5. Replace the cover and reduce engine speed to 750 rpm and repeat the first part of the test with the regulator operating on the upper contact. If the voltage setting is not within specifications, remove the cover and adjust by bending the lower spring hanger. Replace the cover and cycle after each trial adjustment to obtain accurate readings.

Indicator Light Relay Test

1. Make meter connections as shown in Fig. P4. *If the vehicle indicator light cannot be seen while making this test, connect a 12-volt test lamp, using a No. 57 bulb between the "L" and "B" terminals of the regulator.*
2. Turn the rheostat to the "resistance in" position and operate the engine at approximately 800 rpm. Slowly cut out resistance and observe the ammeter reading when the vehicle indicator or test light goes out. It should be 4 to 7 amperes.
3. To adjust relay contact opening amperage, remove the cover and

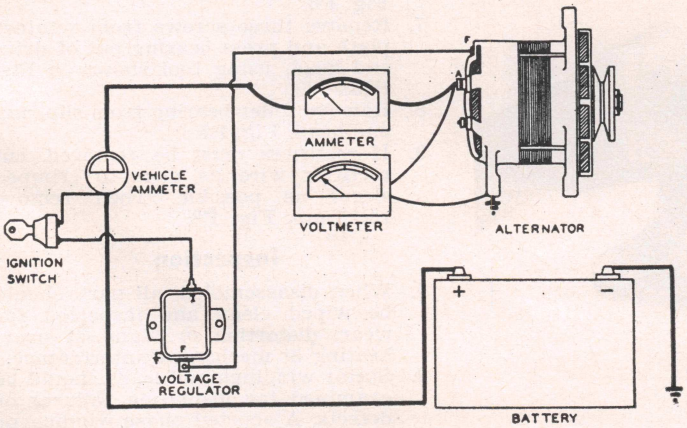

Fig. P3 Meter connections for testing voltage regulator

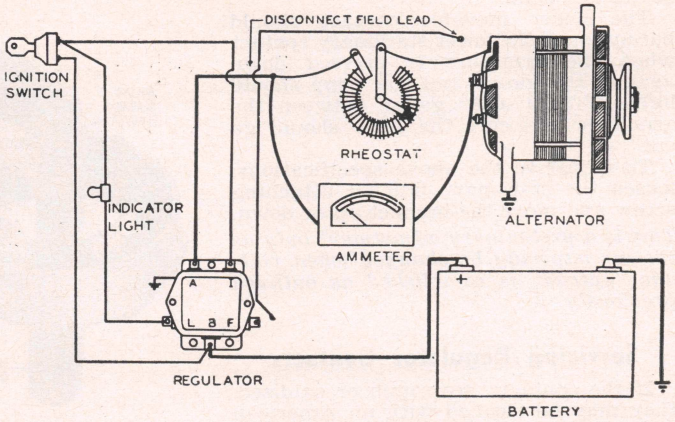

Fig. P4 Meter connections for testing indicator light relay operation

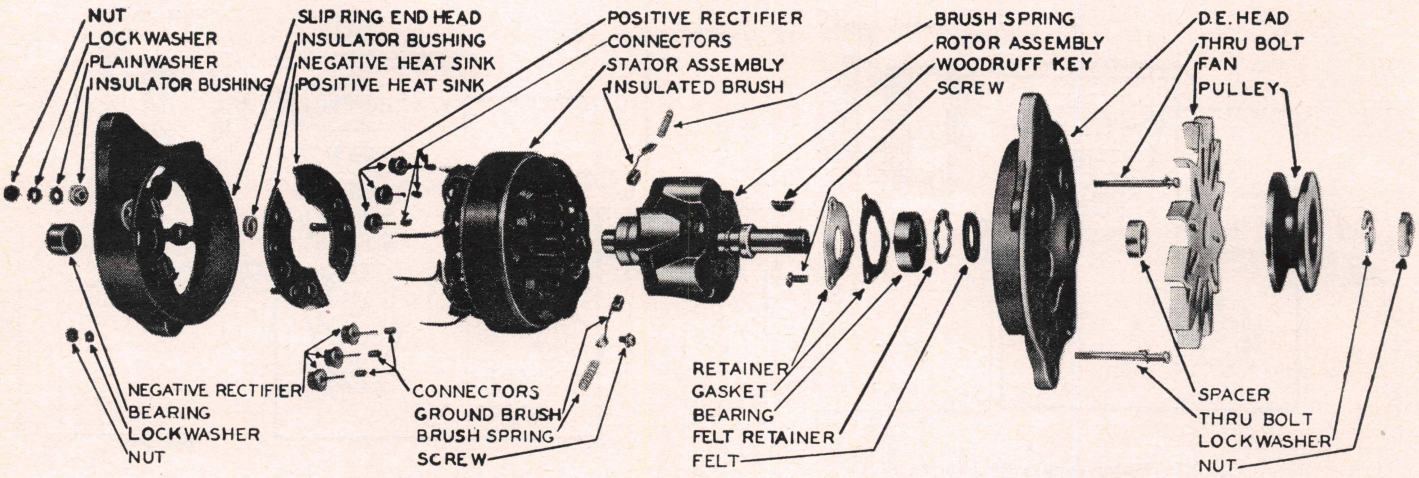

Fig. P5 Exploded view of an Auto-Lite & Prestolite alternator

bend the lower armature spring hanger up or down. Increasing the spring tension raises the setting, and vice versa. Replace the cover and recheck.

BENCH TESTS

If the voltage regulator is unstable or cannot be adjusted to specifications in the above test, remove the regulator from the vehicle for further tests and adjustments.

Voltage Regulator Contact Gap

Contact gap is checked by placing a .010″ gauge between the lower movable contact and the lower stationary contact. Adjust by bending the upper stationary contact up or down. Be sure that proper contact alignment is maintained.

Voltage Regulator Air Gap

To check the voltage regulator armature air gap, connect a No. 57 bulb in series with a 12-volt battery between the regulator field terminal and base.

Place a .034″ round wire gauge between the armature and core on the side of the brass stop rivet nearest the center of the core head.

The lower movable contact should barely touch the lower stationary contact when the armature is pressed down against the gauge and the lamp should light. With a .038″ gauge between the armature and core the light should go out.

To adjust to the above specifications, loosen the stationary bracket attaching screw and move the bracket up or down. *This is a preliminary adjustment only as the air gap may be changed when voltage "spread" is established as outlined previously.*

Servicing Regulator Contacts

If the contacts are rough or oxidized, they may be cleaned with an American Swiss No. 6 equalling cut file. After filing, the contacts should be cleaned with a strip of linen tape saturated with a few drops of lighter fluid and drawn between the contacts. Then repeat with a dry strip of tape to remove fluid.

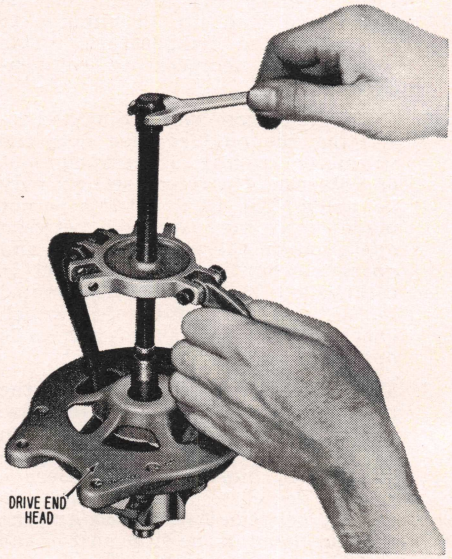

Fig. P6 Removing drive end head and bearing

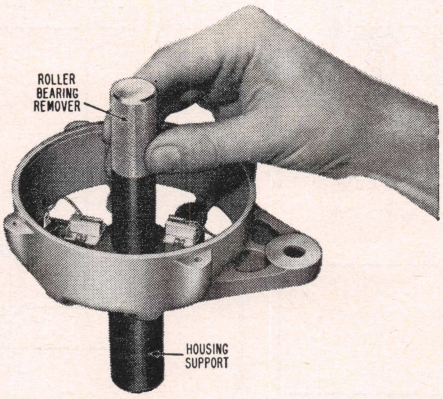

Fig. P7 Removing roller bearing from slip ring end head

ALTERNATOR REPAIRS

When repairing an alternator, Fig. P5, complete disassembly may not be required. In some cases it will be necessary only to perform those operations that are required to repair or replace the defective part. However, the following material covers the complete overhaul procedure.

Disassembly

1. Remove through bolts and tap lightly on end heads to separate them from stator.
2. Remove drive end head and rotor.
3. Remove nuts, etc., from rectifier bracket studs. Separate slip ring end from stator.
4. Both brushes are located in slip ring end housing and should be replaced if worn to $\frac{5}{16}$″ or less. Remove brushes, being careful that the brush springs are not lost when brushes are removed from holders.
5. Remove pulley and fan.
6. Remove drive end head and bearing, Fig. P6.
7. Remove three screws from retainer plate and press bearing out of drive end head, using tool shown in Fig. P13.
8. Remove roller bearing from slip ring end head, Fig. P7.
9. If rectifiers must be removed, cut rectifier wire as near to crimped sleeve as possible. Then remove rectifiers, Fig. P8.

Inspection

1. When disassembled, all parts should be wiped clean and inspected for wear, distortion or signs of overheating or mechanical interference.
2. Stator windings and leads should be examined for insulation failures or defects. A shorted phase winding or rectifier will normally be evidenced by discoloration.

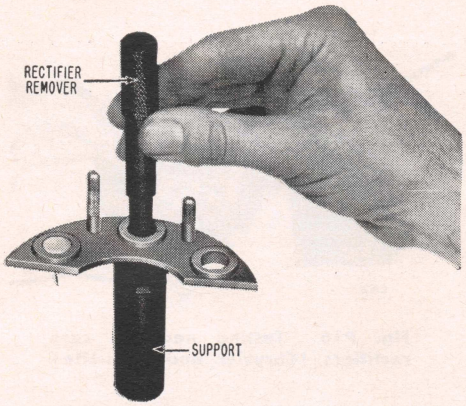

Fig. P8 Removing rectfiers from heat sink

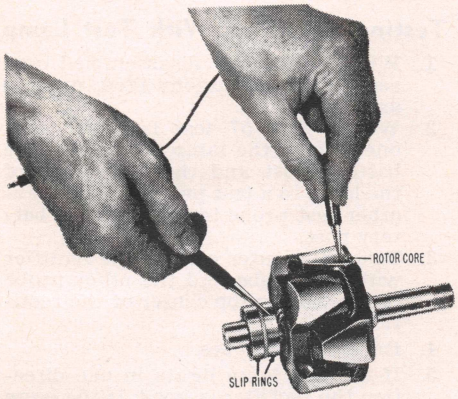

Fig. P9 Testing rotor for grounds

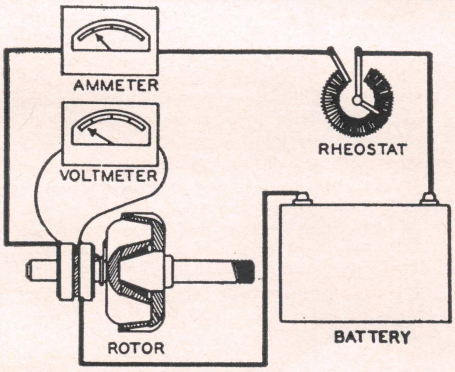

Fig. P10 Meter connections for testing rotor field current draw

3. The stator can be checked for shorted windings with an internal-external growler. The test is made with the stator leads disconnected from rectifiers.
4. The stator can be checked for grounded windings with a 110-volt test lamp and test probes. *Do not make this test with rectifiers connected to stator leads.*
5. Test rectifiers as described below.
6. The rotor should be tested for grounds and for shorted turns in the winding. The ground test is made with the test probes connected in series with a 110-volt test lamp as shown in Fig. P9. If bulb lights, rotor winding is grounded. To test for shorted turns, check rotor field current draw as shown in Fig. P10. Using the rheostat, adjust voltage to 10 volts and read field current draw on ammeter. Reading should be 2.34 to 2.42 at room temperature (70°F). Excessive current draw indicates shorted turns in field winding.

Assembly

1. Press rectifiers in heat sink, Fig. P11. *Rectfiers are identified by red markings on positive and black markings on negative.* Strip the insulation back about ¼″ on stator leads and reconnect them to rectifiers. The connector sleeves should be crimped on rectifier leads. *Do not solder these connections as the excessive heat may damage rectifiers.*
2. Install roller bearing, Fig. P12. Enclosed end of bearing should be flush with outer surface of end frame when installed.
3. Install felt retainer and crinkle washer and press bearing into drive end frame. Use a flat block 2″ square so that pressure is exerted on outer race. Replace retainer plate and gasket on end frame. Make sure snap ring and retainer are in place on rotor shaft and press end frame on, Fig. P13. Press bearing down against snap ring retainer.
4. Replace spacer on shaft and install Woodruff key, fan and pulley.
5. Install brush springs and brushes. Eyelet on ground brush lead is fastened to end frame with a screw. The blade terminal on the insulated brush lead is pushed into the slot in field terminal insulator bushing. A tab on blade terminal snaps into insulator bushing. If damaged, this bushing may be replaced.
6. To spread brushes so they will clear slip rings when end head is installed, a wire slip can be made and used as shown in Fig. P14. This clip can be fashioned from a coat hanger or ⅛″ welding rod cut and bent to the dimensions shown. File a "V" groove in ends of wire clip so that it will contact brush leads when inserted through holes in end head.
7. Install negative rectifier heat sink in slip ring end head and install lockwashers and nuts. Install insulator bushings on positive heat sink studs and install heat sink in end head. Install outer insulator bushings, washers and nuts.
8. Manually press stator in position on slip ring end head and install assembled drive end head and rotor. Make sure that through bolt holes line up on the two end heads. Install and tighten through bolts.
9. Remove brush spreader clip and make sure brush leads do not drag on rotor and that rotor turns freely when rotated by hand. Test alternator when assembled.

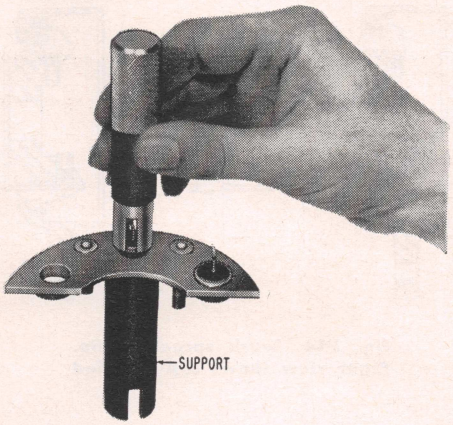

Fig. P11 Installing rectifiers in heat sink

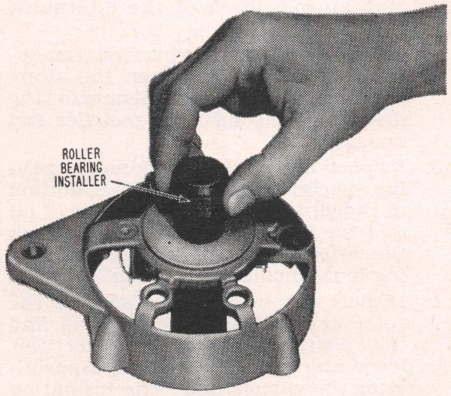

Fig. P12 Installing roller bearing

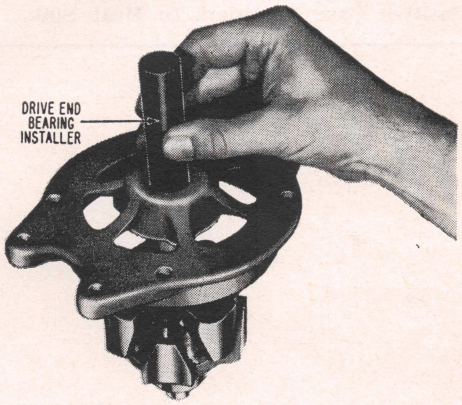

Fig. P13 Installing drive end head and bearing

TESTING RECTIFIERS

There are two methods of testing diode rectifiers. One method requires the use of Tool C-3829, shown in Figs. P15, P16. The other is to make the tests with a No. 57 bulb test lamp. The advantage of the former over the latter is that it is not necessary to perform the time consuming job of separating the soldered leads. (The instrument is available through the Miller Mfg. Co., Alliance, Ohio.)

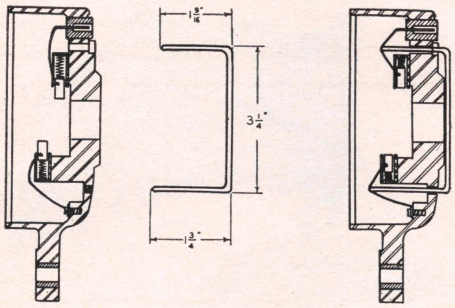

Fig. P14 Brush spreader clip. Right view shows clip installed

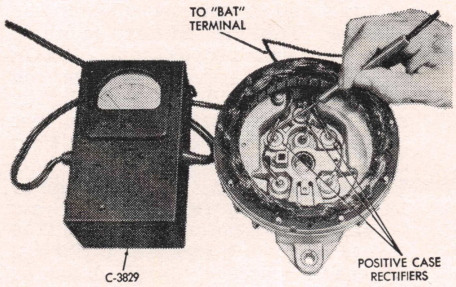

Fig. P15 Testing positive case rectifiers (Chrysler and Auto-Lite)

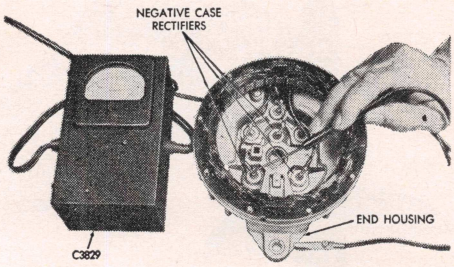

Fig. P16 Testing negative case rectifiers (Chrysler and Auto-Lite)

If the current output test indicates that the alternator is not operating within specifications, remove the alternator from the vehicle and proceed as follows:

1. Perform a field coil draw test to provide an indication of the alternator field.
2. Open the alternator by first removing the brushes and then the alternator through bolts. Separate the drive end housing from rectifier end housing.
3. Inspect alternator components, paying special attention to the condition of the slip rings for indications of oil and for being burnt or worn. Check the brushes for evidences of sticking in the holder or housing.
4. Inspect the bearing surfaces of the rotor shaft at the rectifier end and the bearing. Make sure rectifier leads are in good condition, especially at the connections. The insulation should not be worn or broken.

Testing Rectifiers With Tool C-3829

Positive Case Rectifiers In Heat Sink, Fig. P15—Place alternator on an insulated pad and plug instrument (C-3829) into a 110-volt supply. Connect clip of instrument to "Bat" terminal and touch test prod to bare metal of each of positive case rectifier lead wires in heat sink at rectifiers.

Always contact connection nearest rectifiers. Do not break sealing on rectifier lead wire or on top of rectifier. Sealing material is used for corrosion protection.

The meter reading for each of the rectifiers should be the same. The reading on the meter will indicate two amperes or more for good rectifiers.

Where two of the rectifiers are good and one is shorted, the reading taken at the good rectifiers will be low and zero at the shorted one. Cut the lead at the bad rectifier and the reading at the two good rectifiers will be normal.

Where one of the rectifiers is open, it will read low (one ampere or less) and the two good rectifiers will show normal.

Negative Case Rectifiers In End Housing, Fig. P16—Connect the clip of the instrument to the end housing. Touch test prod to the bare wire of the rectifier leads at the rectifiers.

The test indications are the same as the negative rectifiers. However, the meter will read at the opposite end of the scale.

Testing Rectifiers With Test Lamp

1. With alternator disassembled and rectifier leads disconnected, proceed as follows:
2. With a No. 57 test lamp, connect one side of the lamp to the positive battery post and the other side of the lamp to a test probe. Connect another test probe to the negative battery post.
3. Touch the outer case of the rectifier with one probe and the other probe to the wire in the center of the rectifier.
4. Reverse the probes.
5. If the test lamp lights in one direction the rectifier is good. If the lamp lights in both directions the rectifier is shorted. If the lamp does not light in either direction the rectifier is open.

STARTING MOTORS

CONTENTS

Starter Trouble Check-Out 65
Starter Service 66
Auto-Lite Starters 66
Chrysler Direct Drive Starter 68
Chrysler Reduction Gear Starter 69
Delco-Remy Standard Duty Enclosed Shift Lever Type Starter 73
Delco-Remy Heavy Duty Enclosed Shift Lever Type Starter 75
Delco-Remy Starter With Sprag Clutch Drive 77
Ford Starter With Integral Positive Engagement Drive 78
Ford Starter With Folo-Thru Drive 80
Starter Drive Service 80
Air Starting Motor 81

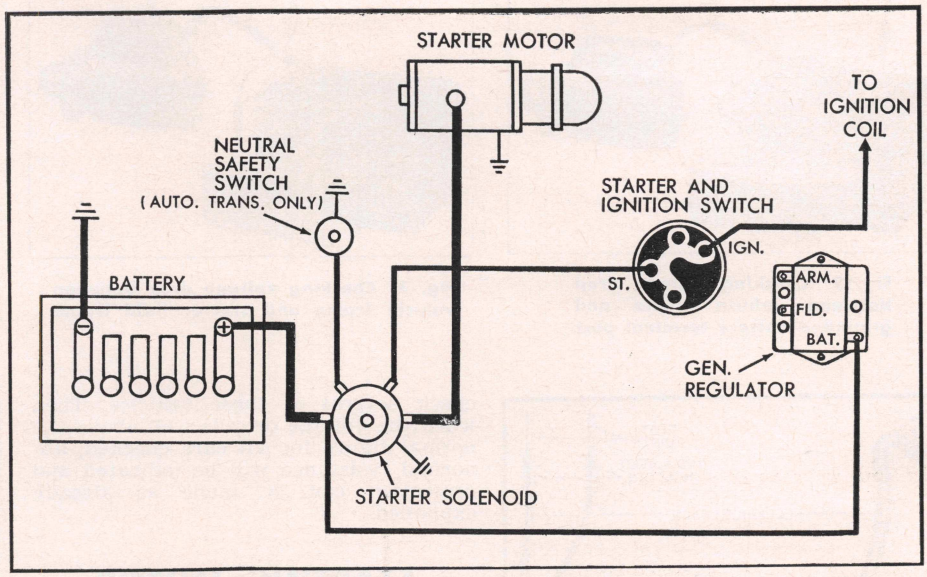

Fig. 1 Wiring diagram of a typical starter circuit

STARTER TROUBLE CHECK-OUT

WHEN TROUBLE develops in the starting motor circuit, and the starter cranks the engine slowly or not at all, several preliminary checks can be made to determine whether the trouble lies in the battery, in the starter, in the wiring between them, or elsewhere. Many conditions besides defects in the starter itself can result in poor cranking performance.

To make a quick check of the starter system, turn on the headlights. They should burn with normal brilliance. If they do not, the battery may be run down and it should be checked with a hydrometer.

If the battery is in a charged condition so that the lights burn brightly, operate the starting motor. Any one of three things will happen to the lights: (1) They will go out, (2) dim considerably or (3) stay bright without any cranking action taking place.

If Lights Go Out

If the lights go out as the starter switch is closed, it indicates that there is a poor connection between the battery and starting motor. This poor connection will most often be found at the battery terminals. Correction is made by removing the cable clamps from the terminals, cleaning the terminals and clamps, replacing the clamps and tightening them securely. A coating of corrosion inhibitor (vaseline will do) may be applied to the clamps and terminals to retard the formation of corrosion.

If Lights Dim

If the lights dim considerably as the starter switch is closed and the starter operates slowly or not at all, the battery may be run down, or there may be some mechanical condition in the engine or starting motor that is throwing a heavy burden on the starting motor. This imposes a high discharge rate on the battery which causes noticeable dimming of the lights.

Check the battery with a hyrdometer. If it is charged, the trouble probably lies in either the engine or starting motor itself. In the engine, tight bearings or pistons or heavy oil place an added burden on the starting motor. Low temperatures also hamper starting motor performance since it thickens engine oil and makes the engine considerably harder to crank and start. Also, a battery is less efficient at low temperatures.

In the starting motor, a bent armature, loose pole shoe screws or worn bearings, any of which may allow the armature to drag, will reduce cranking performance and increase current draw.

In addition, more serious internal damage is sometimes found. Thrown armature windings or commutator bars, which sometimes occur on over-running clutch drive starting motors, are usually caused by excessive over-running after starting. This is the result of such conditions as the driver keeping the starting switch closed too long after the engine has started, the driver opening the throttle too wide in starting, or, improper carburetor fast idle adjustment. Any of these subject the over-running clutch to extra strain so it tends to seize, spinning the armature at high speed with resulting armature damage.

Another cause may be engine backfire during cranking which may result, among other things, from ignition timing being too far advanced.

To avoid such failures, the driver should pause a few seconds after a false start to make sure the engine has come completely to rest before another start is attempted. In addition, the ignition timing should be reset if engine backfiring has caused the trouble.

Lights Stay Bright, No Cranking Action

This condition indicates an open circuit at some point, either in the starter itself, the starter switch or control circuit. The solenoid control circuit can be eliminated momentarily by placing a heavy jumper lead across the solenoid main terminals to see if the starter will operate. This connects the starter directly to the battery and, if it operates, it indicates that the control circuit is not functioning normally. The wiring and control units must be checked to locate the trouble, Fig. 1.

If the starter does not operate with the jumper attached, it will probably have to be removed from the engine so it can be examined in detail.

Checking Circuit With Voltmeter

Excessive resistance in the circuit between the battery and starter will reduce cranking performance. The resistance can be checked by using a voltmeter to measure voltage drop in the circuits while the starter is operated. There are three checks to be made:

1. Voltage drop between car frame and grounded battery terminal post (not cable clamp), Fig. 2.
2. Voltage drop between car frame and starting motor field frame, Fig. 3.
3. Voltage drop between insulated battery terminal post and starting motor terminal stud (or the battery terminal stud of the solenoid), Fig. 4.

Each of these should show no more than one-tenth (0.1) volt drop when the starting motor is cranking for more than 30 seconds at a time to avoid overheating it.

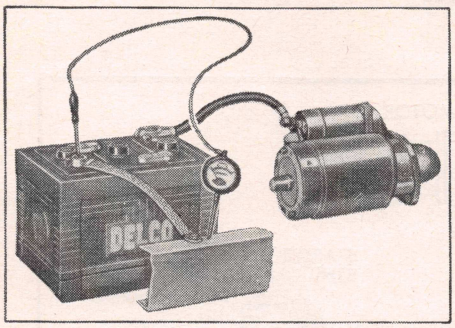

Fig. 2 Checking voltage drop between vehicle frame and grounded battery terminal post

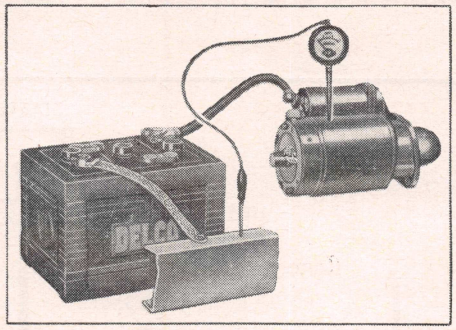

Fig. 3 Checking voltage drop between vehicle frame and starter field frame

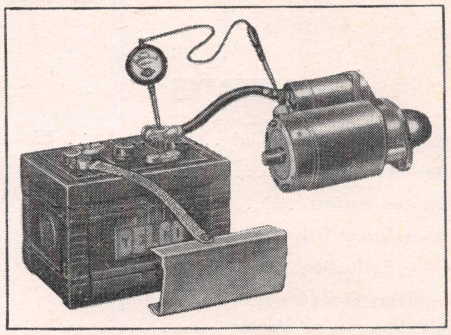

Fig. 4 Checking voltage drop between ungrounded battery terminal post and battery terminal on solenoid

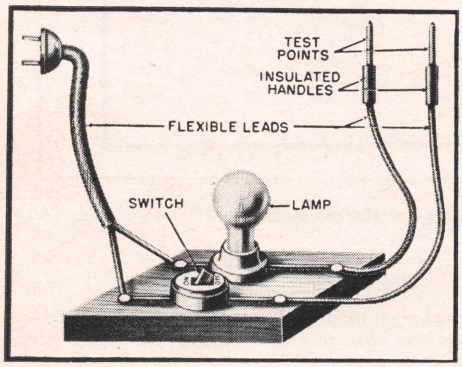

Fig. 5 A simple tester for use in making continuity and ground tests on armature and field windings

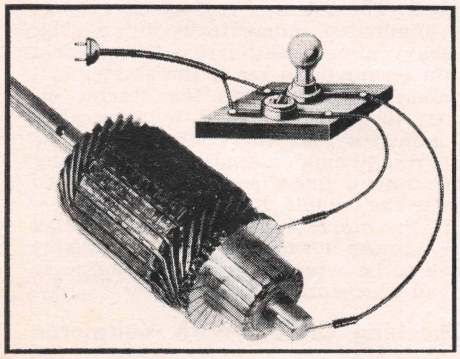

Fig. 6 Checking armature for grounds. If lamp lights armature is grounded and should be replaced

If excessive voltage drop is found in any of these circuits, make correction by disconnecting the cables, cleaning the connections carefully, and then reconnecting the cables firmly in place. A coating of vaseline on the battery cables and terminal clamps will retard corrosion.

NOTE—On some cars, extra long battery cables may be required due to the location of the battery and starter. This may result in somewhat higher voltage drop than the above recommended 0.1 volt. The only means of determining the normal voltage drop in such cases is to check several of these vehicles. Then when the voltage drop is well above the normal figure for all cars checked, abnormal resistance will be indicated and correction can be made as already explained.

STARTING MOTOR SERVICE

To obtain full performance data on a starting motor or to determine the cause of abnormal operation, the starting motor should be submitted to a no-load and torque test. These tests are best performed on a starter bench tester with the starter mounted on it.

From a practical standpoint, however, a simple torque test may be made quickly with the starter in the car. Make sure the battery is fully charged and that the starter circuit wires and terminals are in good condition. Then operate the starter to see if the engine turns over normally. If it does not, the torque developed is below standard and the starter should be removed for further checking.

Remove starter from engine and disassemble as outlined in the following text and make the tests as suggested in Figs. 6 through 11.

AUTO-LITE STARTERS

Two types of starters are in general use. Heavy duty engines are equipped with the unit shown in Fig. 12 and light duty engines use the one shown in Fig. 13. In both motors the brush holders are riveted to a separate brush plate and are not serviced separately. Brush replacement is accomplished by removing the bearing end frame and armature.

Disassembling Overrunning Clutch Motor

1. Referring to Fig. 12, remove roll pin from shifting fork and solenoid coupling pin.
2. Remove solenoid.
3. Support solenoid coupling pin and drive out roll pin.
4. Remove solenoid rubber boot, plunger spring and coupling pin.
5. Remove thru bolts and take out commutator and cover, thrust washer and insulators.

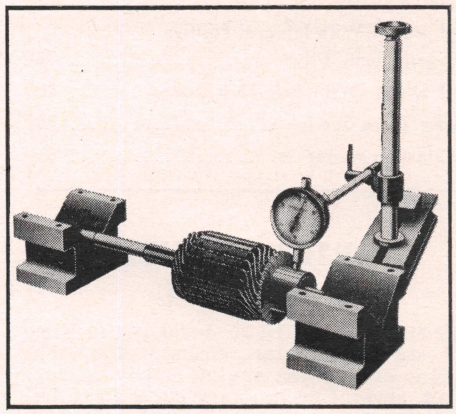

Fig. 7 Measuring commutator runout with a dial indicator. Mount shaft in V blocks and rotate commutator. If runout exceeds .003", commutator should be turned in a lathe to make it concentric

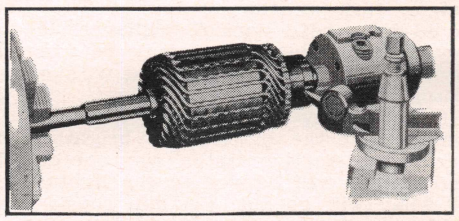

Fig. 8 Turning commutator in a lathe. Take light cuts until worn or bad spots are removed. Then remove burrs with No. 00 sandpaper

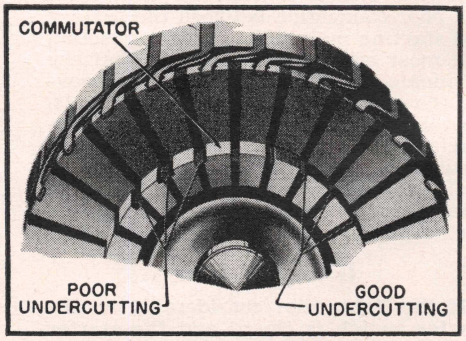

Fig. 9 Good undercutting should be .002" wider than mica insulation, 1/64" deep and exactly centered so that there are no burrs on the mica

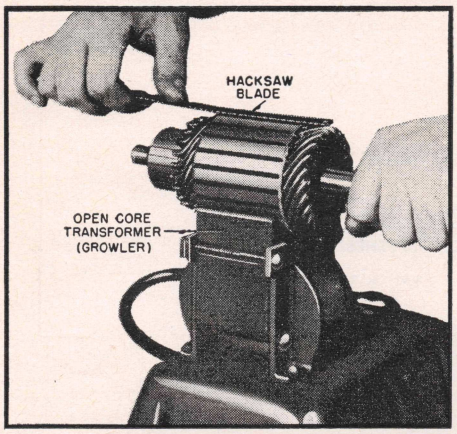

Fig. 10 Checking armature for short circuit. As armature is rotated by hand, steel strip (hacksaw blade) will vibrate if short circuit exists

6. Remove drive end housing, drive fork and armature from field frame.
7. Remove roll pin attaching shifting fork to pinion housing and remove retainer, dust cover and shifting fork.
8. Remove spacer and slide pinion gear toward commutator end of armature; then drive stop collar toward pinion and remove lock ring.
9. Slide starter drive from armature.
10. Remove brush holder ring from field frame (3 screws).
11. Disconnect field lead wire at brush holder ring, disengage the brushes from the holders and carefully slide brush holder ring from field frame.

Disassembling Folo-Thru Drive Motor

1. Refer to Fig. 13, remove thru bolts and tap commutator end frame from field frame.
2. Remove brush holder ring from field frame (3 screws).
3. Disconnect field lead wire at brush holder ring, disengage brushes from holders and carefully slide brush holder ring from field frame.
4. Remove set screw from drive and armature shaft by prying back drive spring to expose screw under spring.
5. Tap drive assembly from armature shaft and remove woodruff key.
6. Slide center bearing plate from armature shaft.

Overrunning Clutch

Place drive unit on shaft and, while holding armature, rotate pinion. The drive pinion should rotate smoothly in one direction (not necessarily easily), but should not rotate in the opposite direction. If drive unit does not function properly or pinion is worn or burred, replace drive unit.

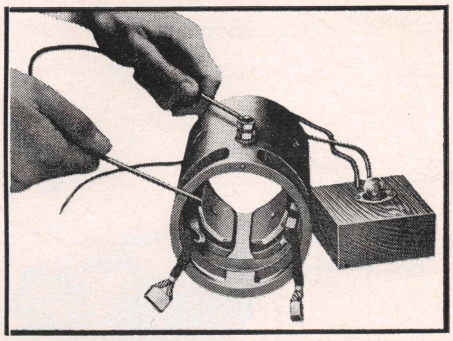

Fig. 11 Testing field coils for grounds. Lamp will light if a ground is present

Folo-Thru Drive

This type of drive, Fig. 14, is serviced only as an assembly. To clean and oil the drive with armature removed, use a screwdriver to pry back the drive spring to expose the attaching set screw. Back

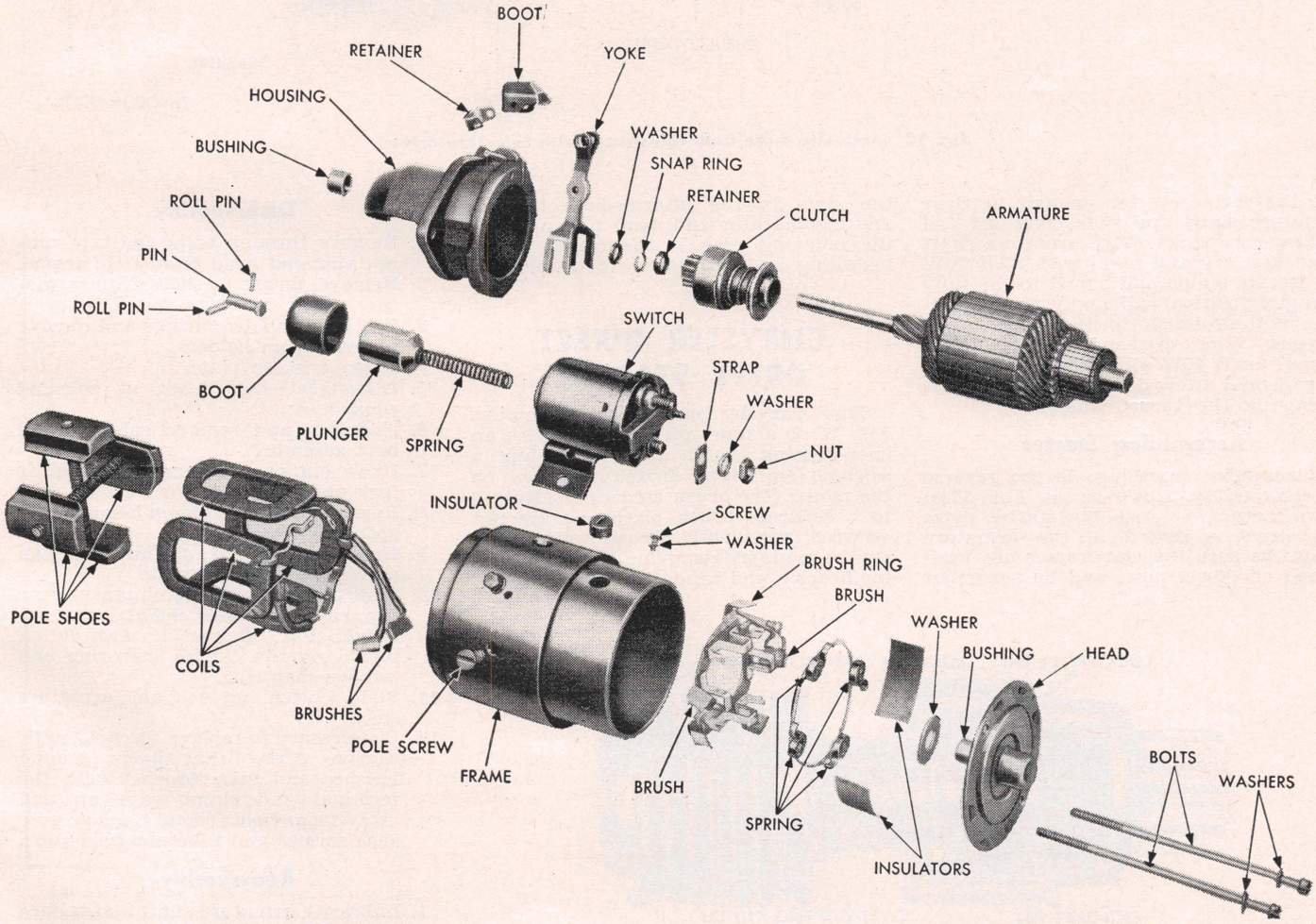

Fig. 12 Auto-Lite four field coil starter with overrunning clutch drive

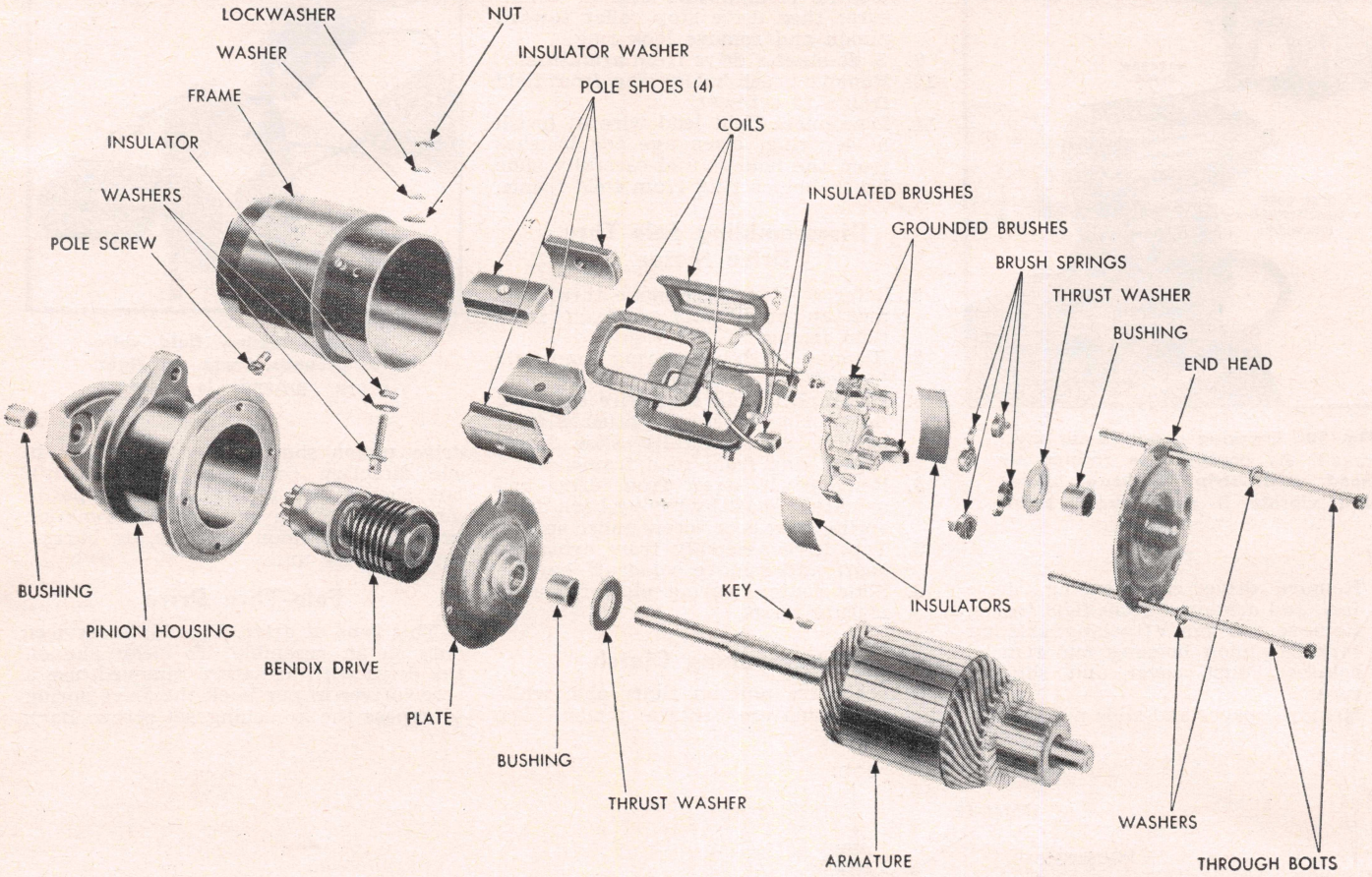

Fig. 13 Auto-Lite three field coil starter with Folo-Thru drive

out the set screw far enough to clear armature shaft and slide drive off end of armature shaft. Wipe armature shaft clean and dry and re-oil with SAE 10W oil. Rotate pinion and barrel to the fully engaged position and apply clean kerosene with a brush to the screw shaft threads. Wipe dry and apply a light film of SAE 10W oil to the screw shaft threads and a few drops of oil under the spring on the thrust washer.

Assembling Starter

Reassembly procedure is the reverse of disassembly. However, on Folo-Thru drive motors, be sure the starter drive set screw is seated in the armature shaft; be sure the end frames are positioned on dowel pins; and be sure that the slots in the intermediate bearing and commutator end head line up with the indexing pins in the frame before installing and tightening thru bolts.

CHRYSLER DIRECT DRIVE STARTER

This Chrysler built starting motor, Fig. 15, is a four coil assembly with an over-running clutch type drive and a solenoid shift-type switch mounted on the motor. The brush holders are riveted to a separate brush plate and are not serviced individually. Brush replacement can be made by removing the commutator bearing end head.

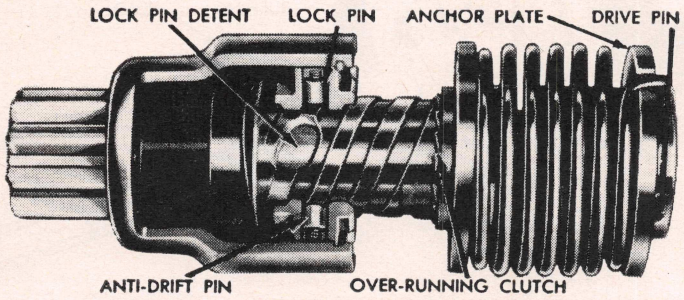

Fig. 14 Folo-Thru starter drive

Disassembly

1. Remove through bolts and tap commutator end head from field frame.
2. Remove thrust washers from armature shaft.
3. Lift brush holder springs and remove brushes from holders.
4. Remove brush plate.
5. Disconnect field leads at solenoid connector.
6. Unfasten and remove solenoid and boot assembly.
7. Drive out over-running clutch shift fork pivot pin.
8. Remove drive end pinion housing and spacer washer.
9. Note position of shifter fork on starter and remove fork.
10. Slide over-running clutch pinion gear toward commutator end of armature. Drive stop retainer toward clutch pinion gear to expose snap ring and remove snap ring.
11. Slide clutch drive from armature shaft.
12. If necessary to replace the field coils, remove screw that holds ground brushes and raise brushes with the terminal and shunt wire up and away from field frame. Remove pole shoe screws and take out field coils.

Reassembly

1. Lubricate armature shaft and splines with SAE 10W or 30W rust preventive oil.

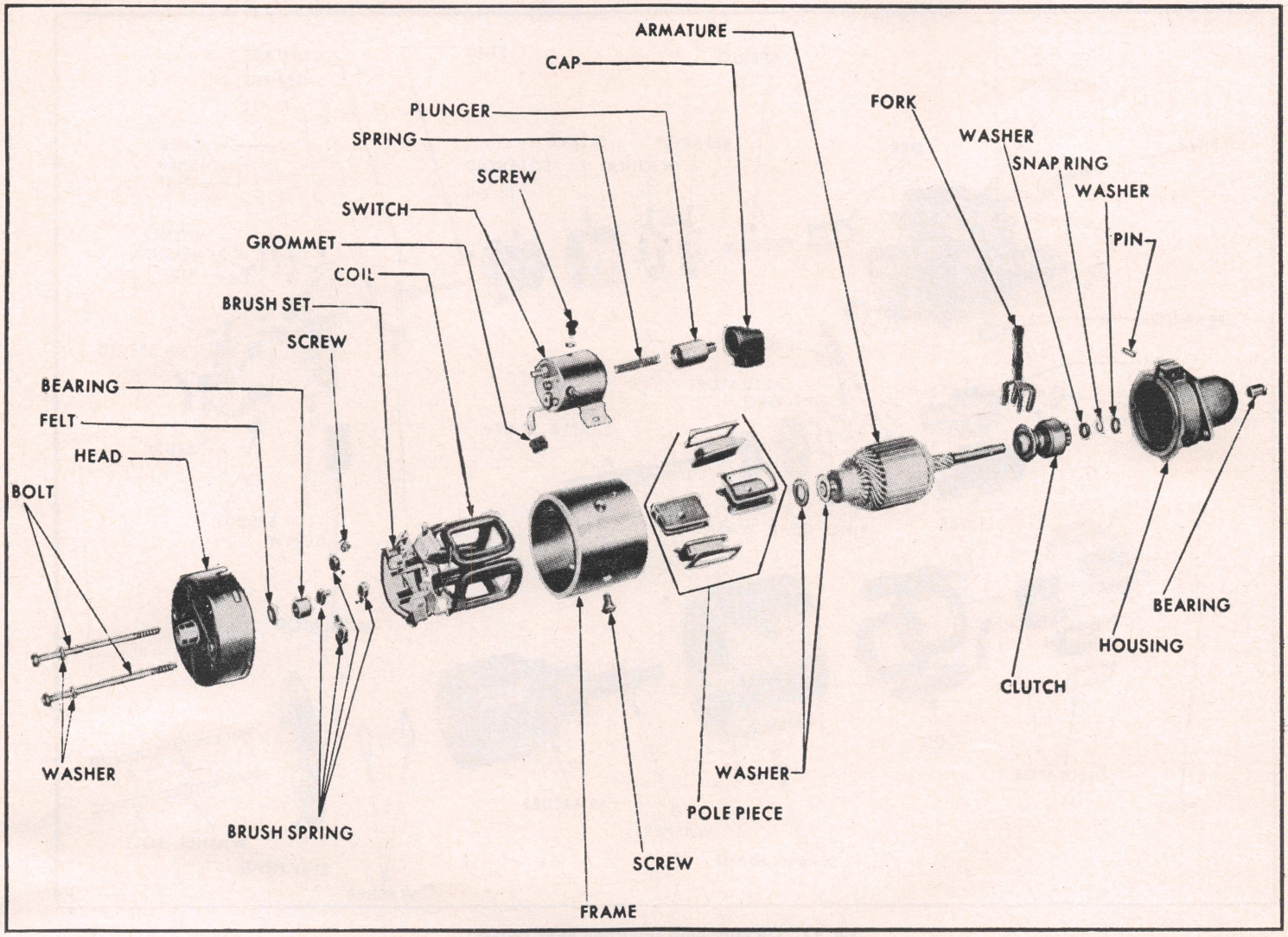

Fig. 15 Chrysler built direct drive starter

2. Install starter drive, stop collar (retainer), lock ring and spacer washer.
3. Install shifter fork over starter drive spring retainer washer with narrow leg of fork toward commutator. *If fork is not positioned properly, starter gear travel will be restricted, causing a lockup in the clutch mechanism.*
4. Install drive end (pinion) housing on armature shaft, indexing the shift fork with slot in drive end of housing.
5. Install shift fork pivot pin.
6. Install armature with clutch drive, shifter fork and pinion housing. Slide armature into field frame until pinion housing indexes with slot in field frame.
7. Install solenoid and boot assembly and tighten bolts securely.
8. Install ground brushes.
9. Connect field coil leads at solenoid connector.
10. Install brush holder ring, indexing tang of ring in hole of field frame.
11. Position brushes in brush holders. *Be sure field coil lead wires are properly enclosed behind brush holder ring and that they do not interfere with brush operation.*
12. Install thrust washer on commutator end of armature shaft to obtain .010″ minimum end play.
13. Install commutator end head.
14. Install through bolts and tighten securely.

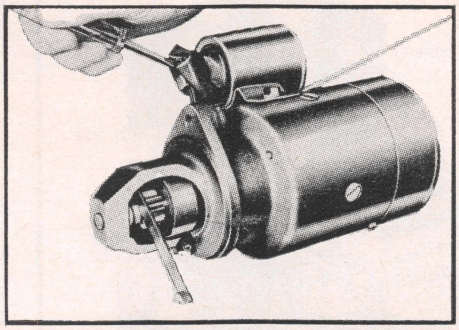

Fig. 16 Clearance between end of pinion and pin stop should be 1/8″ with plunger seated and pinion pushed toward commutator

Adjusting Pinion Clearance

1. Place starter in vise with soft jaws and tighten vise enough to hold starter. *Place a wedge or screwdriver between bottom of solenoid and starter frame to eliminate all deflection in solenoid when making pinion clearance check.*
2. Push in on solenoid plunger link, Fig. 16 (not fork lever) until plunger bottoms.
3. Measure clearance between end of pinion and pin stop with plunger seated and pinion pushed toward commutator end. Clearance should be ⅛″. Adjust by loosening solenoid attaching screws and move solenoid fore and aft as required.
4. Test starter operation for free running and install on engine.

CHRYSLER REDUCTION GEAR STARTER

This reduction gear starting motor, Fig. 17, has an armature-to-engine crankshaft ratio of 45 to 1; a 3½ to 1

Fig. 17 Chrysler built reduction gear starter

reduction gear set is built into the motor assembly. The starter utilizes a solenoid shift. The housing of the solenoid is integral with the starter drive end housing.

Disassembly

1. Place gear housing of starter in a vise with soft jaws. *Use vise as a support fixture only; do not clamp.*
2. Remove through bolts and starter end head assembly.
3. Carefully pull armature up and out of gear housing, and starter frame and field assembly. Remove steel and fiber thrust washer. *The wire of the shunt field coil is soldered to the brush terminal. One pair of brushes are connected to this terminal. The other pair of brushes is attached to the series field coils by means of a terminal screw. Carefully pull the frame and field assembly up just enough to expose the terminal screw and the solder connection of the*

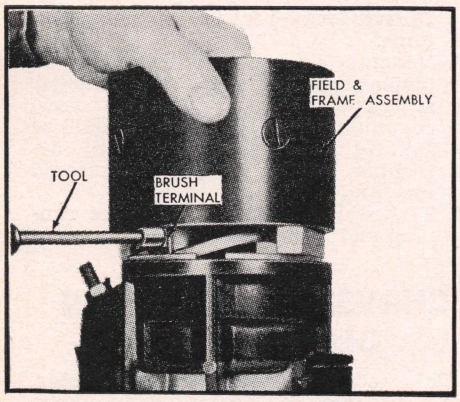

Fig. 18 Removing brush terminal screw

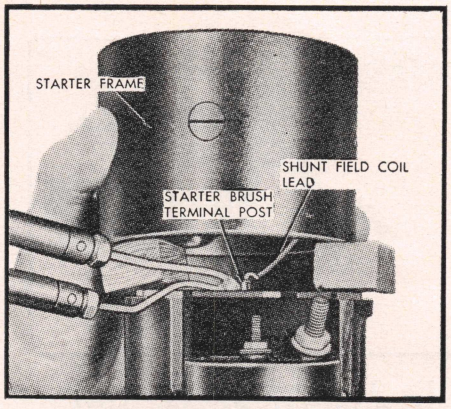

Fig. 19 Unsoldering shunt field coil lead from starter brush terminal

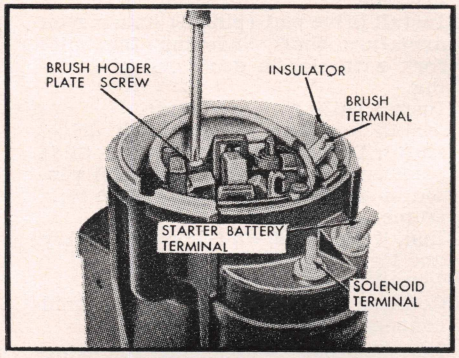

Fig. 20 Remove brush insulator which prevents contact between brush terminal and gear housing. Remove screw attaching brush holder plate to gear housing

shunt field at the brush terminal. Place two wood blocks between starter frame and gear housing, Fig. 18, to facilitate removal of terminal screw and unsoldering of shunt field wire at brush terminal.

4. Support brush terminal by placing a finger behind terminal and remove screw, Fig. 18.
5. Complete the disassembly procedure by referring to Figs. 19 through 33.

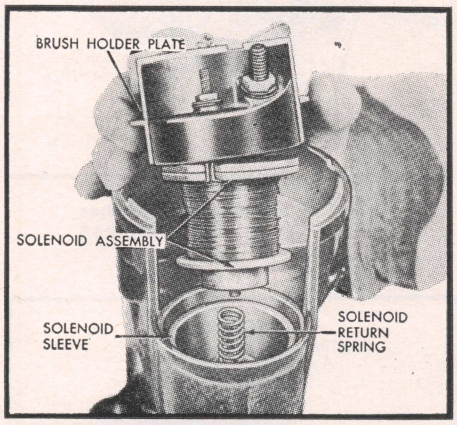

Fig. 21 Remove brush holder plate with brushes and solenoid as a unit

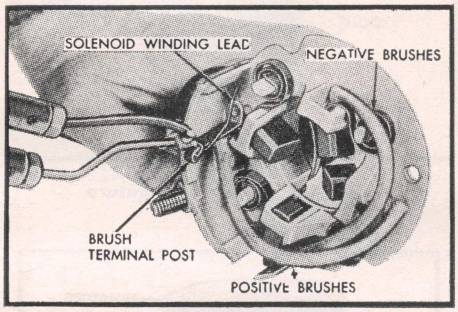

Fig. 22 Unsolder solenoid winding from brush terminal

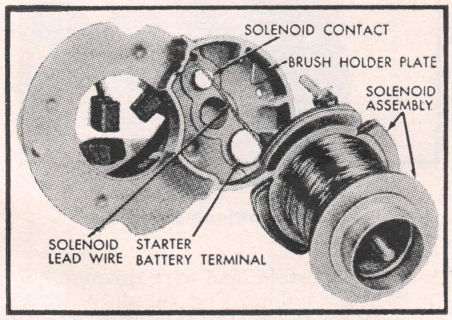

Fig. 23 Remove nut, steel washer and nylon washer from solenoid terminal. Separate brush holder plate from solenoid

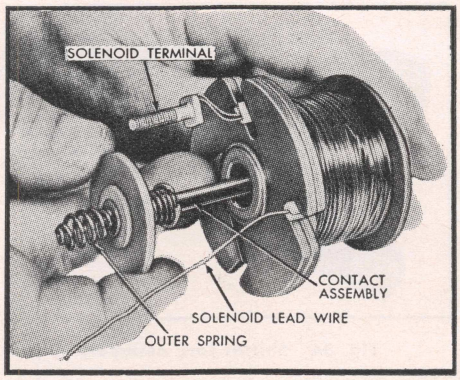

Fig. 24 Remove nut, steel washer and nylon washer from starter battery terminal. Remove terminal from holder plate. Then remove solenoid contact assembly

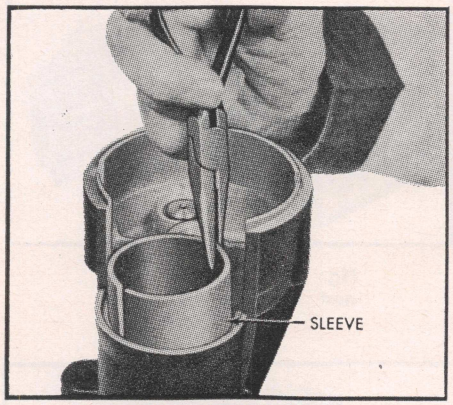

Fig. 25 Remove solenoid coil sleeve

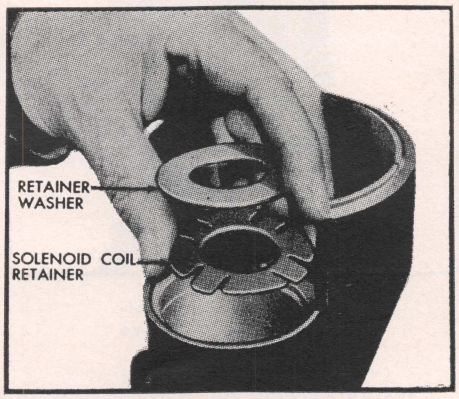

Fig. 26 Remove solenoid return spring (Fig. 21). Then remove solenoid coil retainer washer and retainer from solenoid housing

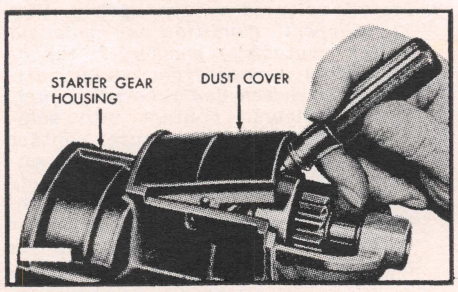

Fig. 27 Remove dust cover from gear housing

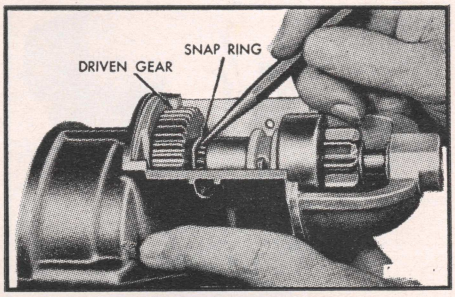

Fig. 28 Release snap ring that positions driven gear on pinion shaft. This ring is under tension and a cloth should be placed over ring to prevent it from springing away after removal

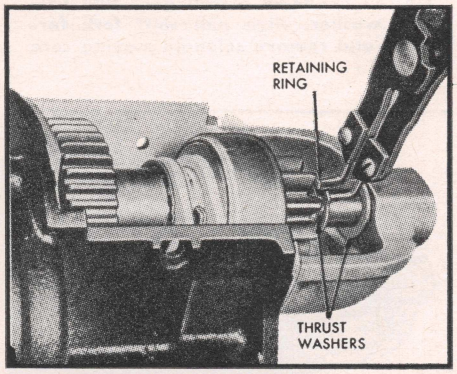

Fig. 29 Release retainer ring at front of pinion shaft. Do not spread ring any greater than the outside diameter of pinion shaft otherwise ring can be damaged

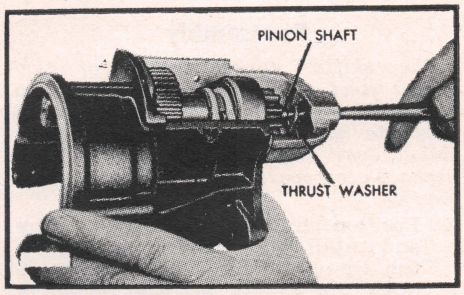

Fig. 30 Push pinion shaft toward rear of housing and remove snap ring and thrust washers

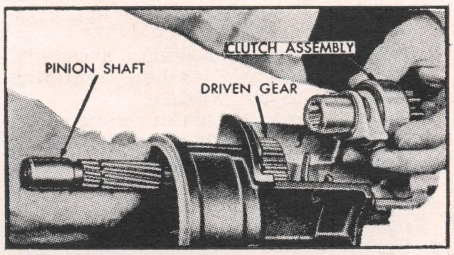

Fig. 31 Lift out clutch and pinion assembly with the two shift fork nylon actuators

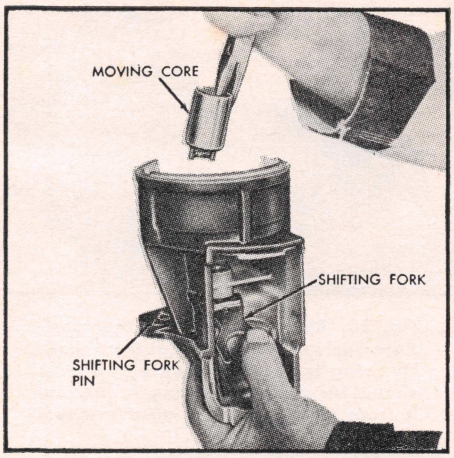

Fig. 32 Remove driven gear and friction washer. Then pull shift fork forward and remove solenoid moving core

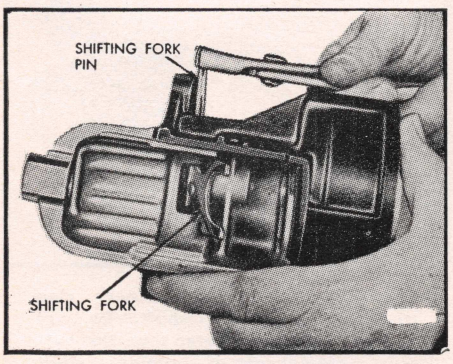

Fig. 33 Remove shift fork retaining pin and take out shift fork

Reassembly

The shifter fork consists of two spring steel plates assembled with two rivets, Fig. 34. There should be about $\frac{1}{16}$" side movement to insure proper pinion gear engagement. Lubricate between plates sparingly with SAE 10 engine oil.

1. Position shift fork in drive housing and install fork retaining pin, Fig. 33. *One tip of pin should be straight, the other tip should be bent at a 15 degree angle away from housing. Fork and pin should operate freely after bending tip of pin.*
2. Install solenoid moving core and engage shifting fork, Fig. 32.
3. Enter pinion shaft in drive housing and install friction washer and driven gear.
4. Install clutch and pinion assembly, Fig. 31, thrust washer, retaining ring, and thrust washer.
5. Complete installation of pinion shaft, engaging fork with clutch actuators, Fig. 35. *Friction washer must be positioned on shoulder of splines of pinion shaft before driven gear is positioned.*
6. Install driven gear snap ring, Fig. 29. Install pinion shaft retaining ring, making sure ring fits tightly in shaft groove.

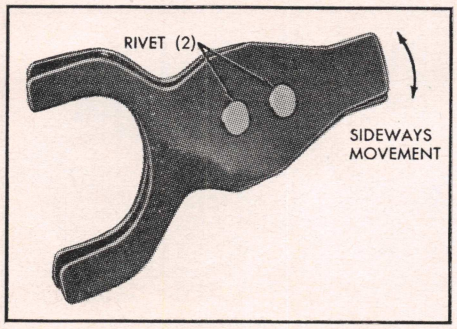

Fig. 34 Shifter fork assembly

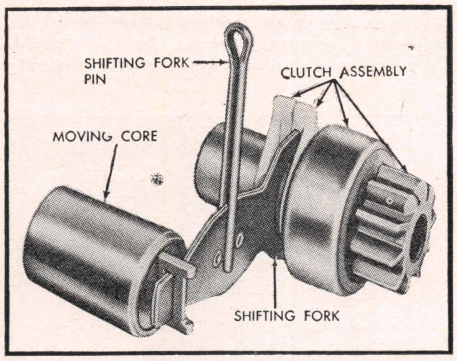

Fig. 35 Shifter fork and clutch arrangement

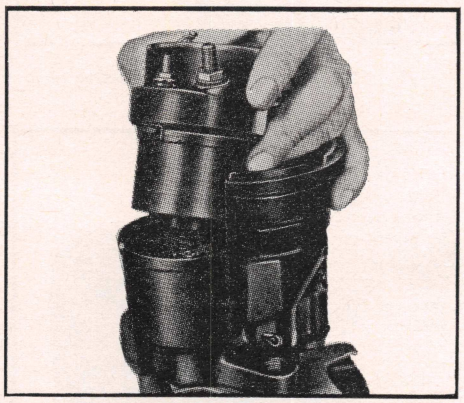

Fig. 36 Installing solenoid coil and sleeve

7. Install solenoid coil retainer, Fig. 26, with tangs down. *Space retainer in housing bore so that the four tangs rest on ridge in housing bore and not in the recesses.*
8. Install solenoid retainer washer.
9. Install solenoid return spring, Fig. 21. *Inspect condition of solenoid switch contacting washer. If top of washer is burned from arcing, disassemble switch and reverse washer.*
10. Install solenoid contact into solenoid, Fig. 24. Make sure contact spring is positioned in solenoid contact. *Inspect condition of contacts in brush holder plate. If contacts are badly burned, replace brush holder with brushes and contacts as an assembly.*

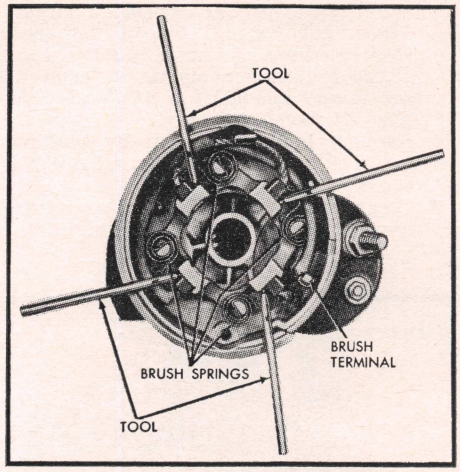

Fig. 37 Positioning brushes with Tool Set C-3855

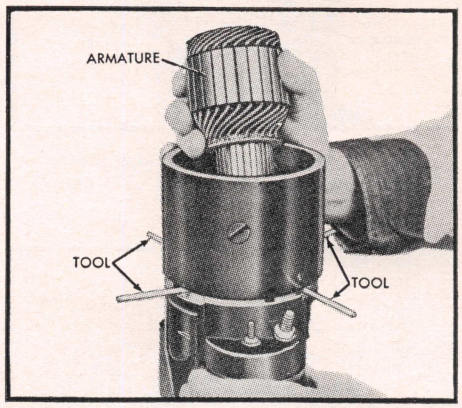

Fig. 38 Installing armature

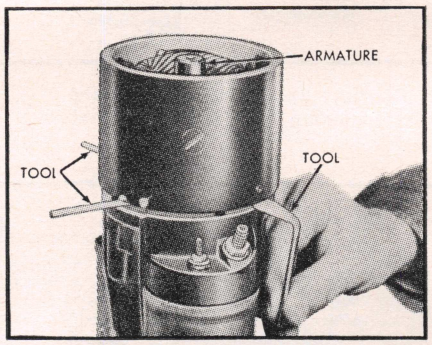

Fig. 39 Removing brush positioning tools

11. Enter solenoid lead wire through hole in brush holder, Fig. 23, and solenoid stud, insulating washer, flat washer and nut.
12. Solder solenoid lead wire to contact terminal, Fig. 22. Wrap wire securely around terminal and solder with a high temperature solder and resin flux.
13. Carefully enter solenoid coil and coil sleeve into bore of gear housing and position brush plate assembly into gear housing, Fig. 36. Align tongue

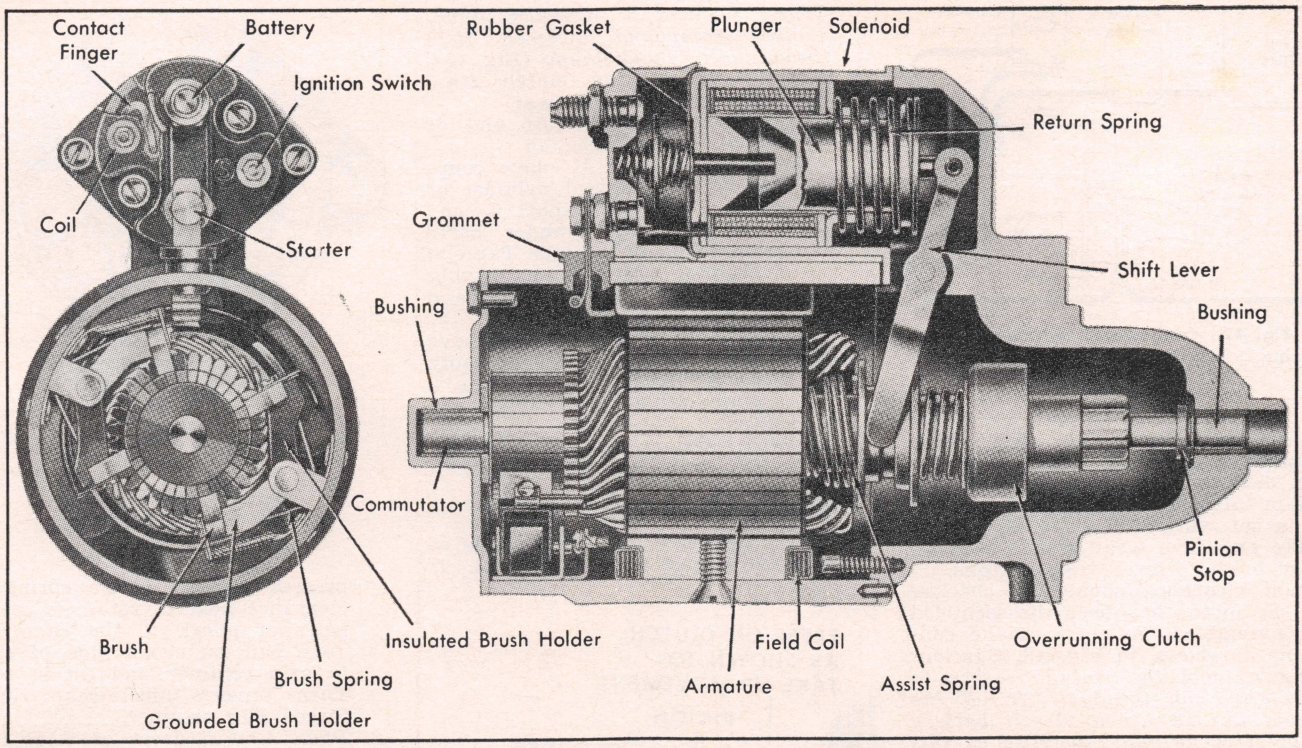

Fig. 40 Delco-Remy Standard Duty starter with enclosed shift lever

of ground terminal with notch in brush holder.

14. After brush holder is bottomed in housing, install attaching screw, Fig. 20. Tighten screw and install flat insulating washer and holder in place with friction tape.
15 Position brushes with tools shown in Fig. 37 or equivalent.
16 Position field frame to exact position and resolder field coil lead, Fig. 19.
17. Install brush terminal screw, Fig. 18.
18. Install armature thrust washer on brush holder plate and enter armature into field frame and gear housing, Fig. 38. Carefully engage splines of shaft with reduction gear.
19. Remove brush positioning tools, Fig. 39. Install fiber and steel thrust washers on armature shaft.
20. Position starter end head, install screws and tighten securely.
21. Install gear housing dust cover. *Make sure dimples on cover are securely engaged in holes provided in gear housing.* Test starter for free running and install on engine.

DELCO-REMY STANDARD DUTY ENCLOSED SHIFT LEVER TYPE MOTOR

This type starting motor, Fig. 40, has the solenoid shift lever mechanism and the solenoid plunger enclosed in the drive housing, thus protecting them from exposure to road dirt, icing conditions and splash. They have an extruded field frame and an overrunning clutch type of drive. The overrunning clutch is operated by a solenoid switch mounted to a flange on the drive housing.

Solenoid

The solenoid is attached to the drive end housing by two screws. The angle of the nose of the plunger provides a greater bearing area between the plunger and core tube. A molded push rod, Fig. 41, is assembled in the contact assembly. A shoulder molded on the push rod and a cup that can easily be assembled to the rod and locked into position over two molded bosses holds the contact assembly in place.

To disassemble the cup from the push rod, push in on the metal cup and rotate ¼ turn so the molded bosses on the rod are in line with openings in the cup; then slide the metal cup off the rod.

To assemble the metal cup on the rod, locate the parts on the rod as shown and align the large openings in the cup with the molded bosses on the rod; then push in on the cup and rotate it ¼ turn so the small bosses on the rod fall into the keyways of the cup.

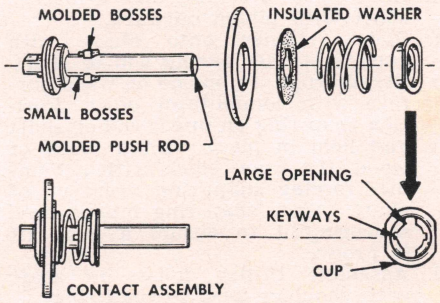

Fig. 41 Solenoid contact assembly

Solenoid Terminals

The terminals of the solenoid are assembled in a molded cover. Some solenoids have an additional small terminal which is identified with the letter "R". To this terminal is attached a small metal finger which makes contact with a disc inside the solenoid when it is energized. On the vehicle, this terminal is connected to the battery side of the ignition coil. The purpose of this is to short out the ignition resistor during cranking and thereby provide high ignition coil output for starting the engine.

Maintenance

Most motors of this type have graphite and oil impregnated bronze bearings which ordinarily require no added lubrication except at time of overhaul when a few drops of light engine oil should be placed on each bearing before reassembly.

Motors provided with hinge cap oilers should have 8-10 drops of light engine oil every 5000 miles, or every 300 hours of operation. Since the motor and brushes cannot be inspected without disassembling the unit, there is no service that can be performed with the unit assembled on the vehicle.

Starting Motor Tests

Free Speed Check — With the circuit connected as shown in Fig. 42, use a tachometer to measure armature revolutions per minute. Failure of the motor to perform to specifications may be due to tight or dry bearings, or high resistance connections.

Pinion Clearance—There is no provision for adjusting pinion clearance on this

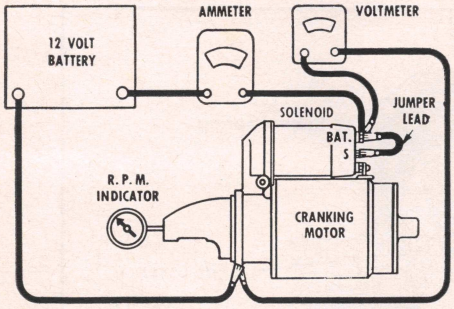

Fig. 42 Connections for checking free speed of motor

type motor. When the shift lever mechanism is correctly assembled, the pinion clearance should fall within the limits of .010 to .140". When the clearance is not within these limits, it may indicate excessive wear of the solenoid linkage or shift lever yoke buttons.

Pinion clearance should be checked after the motor has been disassembled and reassembled. To check, make connections as shown in Fig. 43. *Caution: Do not connect the voltage source to the ignition coil terminal "R" of the solenoid. Do not use a 12-volt battery instead of the 6 volts specified as this will cause the motor to operate.* As a further precaution to prevent motoring, connect a heavy jumper lead from the solenoid motor terminal to ground.

After energizing the solenoid with the clutch shifted toward the pinion stop retainer, push the pinion back toward the commutator end as far as possible to take up any slack movement; then check the clearance with a feeler gauge, Fig. 44.

Disassembling Motor

Normally the motor should be disassembled only so far as necessary to repair or replace defective parts.

1. Disconnect field coil connectors from solenoid "motor"' terminal.
2. Remove thru bolts.
3. Remove commutator end frame and field frame assembly.
4. Remove armature assembly from drive housing. On some models it may be necessary to remove solenoid and shift lever assembly from the drive housing before removing the armature assembly. *Important: When solenoid is installed, apply sealing compound between field frame and solenoid flange* (Fig. 45).
5. Remove overrunning clutch from armature shaft as follows:
   a) Slide thrust collar off end of armature shaft, Fig. 46.
   b) Slide a standard ½" pipe coupling or other metal cylinder of suitable size onto shaft so end of coupling or cylinder butts against edge of retainer. Tap end of coupling with hammer, driving retainer toward armature and off snap ring.
   c) Remove snap ring from groove in shaft. If snap ring is too badly distorted during removal, use a new one when reassembling the clutch.
   d) Slide retainer, clutch and assist spring from armature shaft.

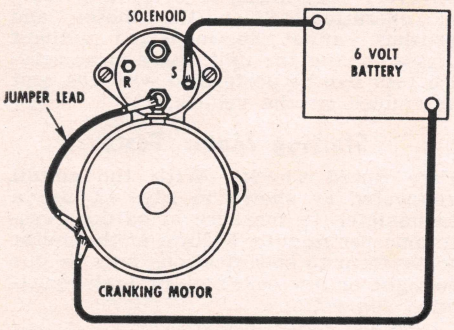

Fig. 43 Connections for checking pinion clearance

Reassembling Motor, Fig. 47

1. Lubricate drive end and splines of armature shaft with SAE 10 oil. *If heavier oil is used it may cause failure to mesh at low temperatures.*

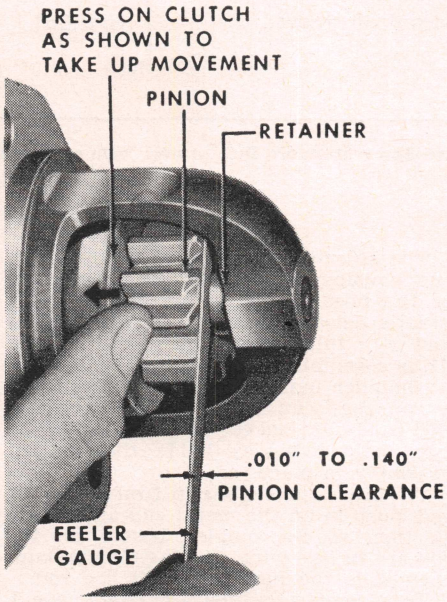

Fig. 44 Checking pinion clearance

2. Place "assist" spring on drive end of shaft next to armature, with small end against lamination stack.
3. Slide clutch assembly onto armature shaft with pinion outward.
4. Slide retainer onto shaft with cupped surface facing end of shaft.
5. Stand armature on end on wood surface with commutator down. Position snap ring on upper end of shaft and hold in place with a block of wood. Hit wood block with a hammer forcing snap ring over end of shaft. Slide snap ring into groove, squeezing it to ensure a good fit in groove.
6. Assemble thrust collar on shaft with shoulder next to snap ring.
7. Position retainer and thrust collar next to snap ring. With clutch pressed against assist spring, for clearance next to retainer, use two pairs of pliers at the same time (one pair on either side of shaft) to grip retainer and thrust collar. Then squeeze until snap ring is forced into retainer.
8. Place 4 or 5 drops of SAE 10 oil in drive housing bushing. Make sure thrust collar is in place against snap ring and retainer; then slide armature and clutch assembly into place in drive housing.
9. Attach solenoid and shift lever assembly to drive housing. Be sure lever buttons are located between sides of clutch collar.
10. Position field frame over armature, *applying sealing compound between frame and solenoid flange, Fig. 45.* Position frame against drive housing, using care to prevent damage to brushes.
11. Place 4 or 5 drops of SAE 10 oil in bushing in commutator end frame. Make sure leather brake washer is on armature shaft; then slide commutator end frame onto shaft.
12. Install thru bolts and tighten securely.
13. Reconnect field coil connectors to solenoid "motor" terminal.

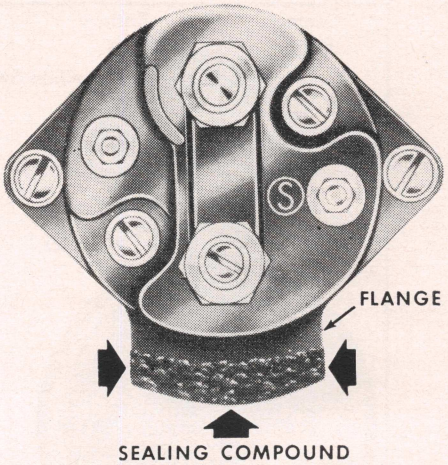

Fig. 45 Sealing solenoid housing to frame

Cleaning

The overrunning clutch, armature and fields should not be cleaned in any degreasing tank, or with grease dissolving solvents, since these would dissolve the lubricant in the clutch mechanism and would damage the insulation in the armature and field coils. It is suggested that all parts, except the clutch, be

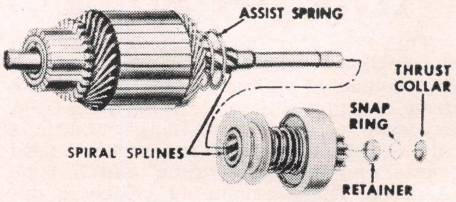

Fig. 46 View of armature and overrunning clutch

cleaned with oleum spirits and a brush. The clutch can be wiped with a clean cloth.

If the commutator is dirty it may be cleaned wth No. 00 sandpaper; *never use emery cloth for this purpose.*

DELCO-REMY HEAVY DUTY ENCLOSED SHIFT LEVER TYPE MOTOR

In this type motor, Figs. 48 and 49, the nose housing can be rotated to obtain a number of different solenoid positions with respect to the mounting flange, which is a feature that makes these motors adaptable to a wide variety of mounting applications.

Positive lubrication is provided to the bronze bushing located in the commutator end frame, in the lever housing, and in the nose housing by an oil saturated wick that projects through each bushing and contacts the armature shaft. Oil can be added to each wick by removing a pipe plug which is accessible on the outside of the motor.

Available as an optional feature is a waste-filled oil reservoir for each wick which makes available a larger supply of oil thereby extending the time required between lubrication periods. Another optional feature is "O" rings which can be added to resist entry of dirt and moisture into the entire motor assembly.

Many models feature a seal between the shaft and lever housing, and all models have a rubber boot or linkage seal over the solenoid plunger. The seal and the boot, when used together, prevent entry of transmission oil into the motor main frame and solenoid case, allowing the motor to be used on wet clutch applications.

Overrunning Clutches

As shown in Fig. 48 and 49, two kinds of clutches, heavy duty or intermediate duty overunning type, may be used with these motors. The clutches may be either the sprag type or the four-roll type. Both types are moved into mesh with the ring gear by the action of the solenoid. Once engaged, the clutch will not disengage during intermittent engine firing, which prevents damage to pinion and ring gear teeth. The pinion remains engaged until starting is assured and the solenoid circuit is interrupted.

Maintenance

Under normal operating conditions, no maintenance will be required between engine overhaul periods. At time of engine overhaul, motors without oil reservoirs and "O" rings, and "long life" motors incorporating "O" rings and oil reservoirs should be disassembled, inspected, cleaned and tested.

Adjustable Nose Housing

Two methods are employed to attach the nose housing to the lever housing. As shown in Fig. 48, one method attaches the nose housing to the lever housing by six bolts located around the outside of the housing. To relocate the housing, it is only necessary to remove the bolts, rotate the housing to the de-

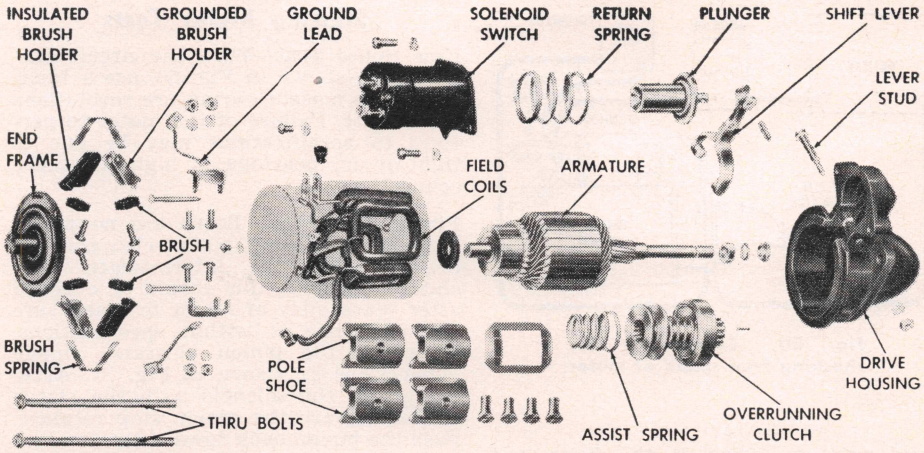

Fig. 47 Disassembled view of starting motor

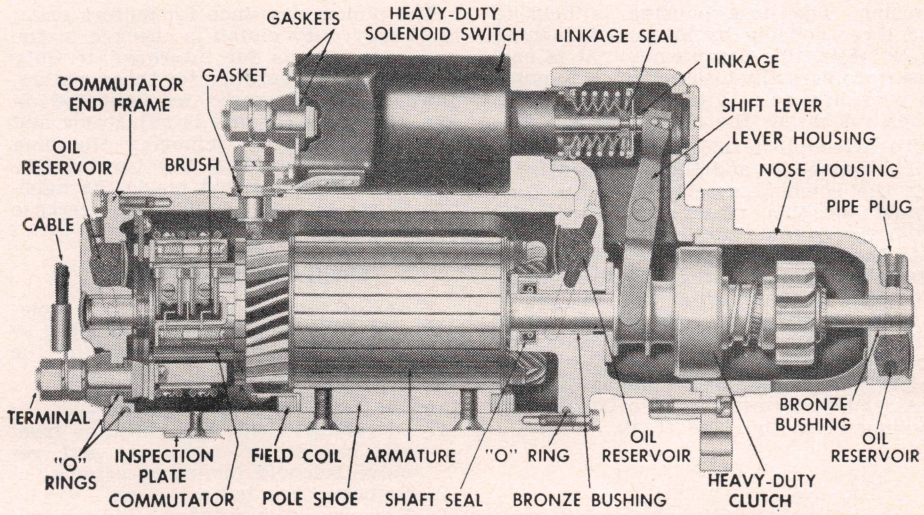

Fig. 48 Delco-Remy heavy duty enclosed shift lever type motor with heavy duty clutch

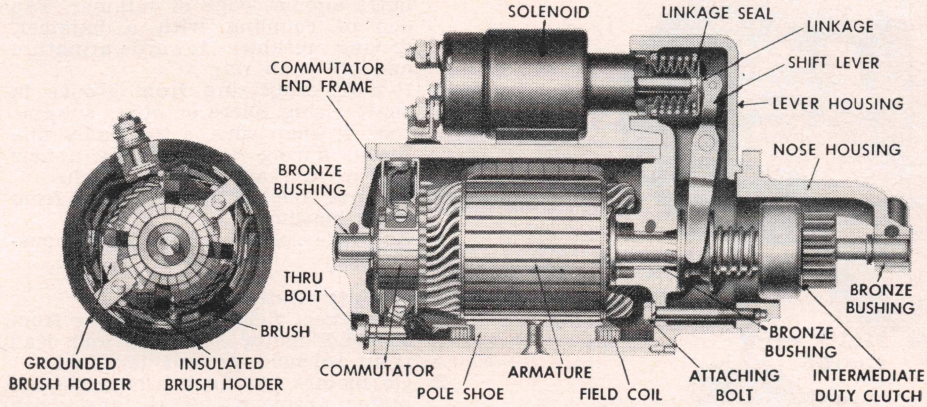

Fig. 49 Delco-Remy heavy duty enclosed shift lever type motor with intermediate duty clutch

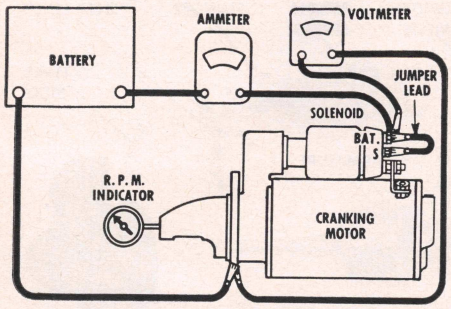

Fig. 50 Connections for checking free speed of motor

sired position, reinstall the bolts and torque them to 13-17 ft. lb. during reassembly.

In the second method, Fig. 49, the lever housing and commutator end frame are held to the field frame by thru bolts extending from the commutator end frame to threaded holes in the lever housing. The nose housing is held to the lever housing by internal attaching bolts. With this arrangement, it is necessary to partially disassemble the motor to provide access to the attaching bolts when relocating the nose housing.

To accomplish this, remove the electrical connector and the screws attaching the solenoid assembly to the field frame and then remove the thru bolts from the commutator end frame. Separate the field frame from the remaining assembly, and pull the armature away from the lever housing until the pinion stop rests against the clutch pinion. This will clear the nose housing attaching bolts so they can be removed, permitting relocation of the nose housing. During reassembly, torque the nose housing attaching bolts to 11-15 ft. lb.

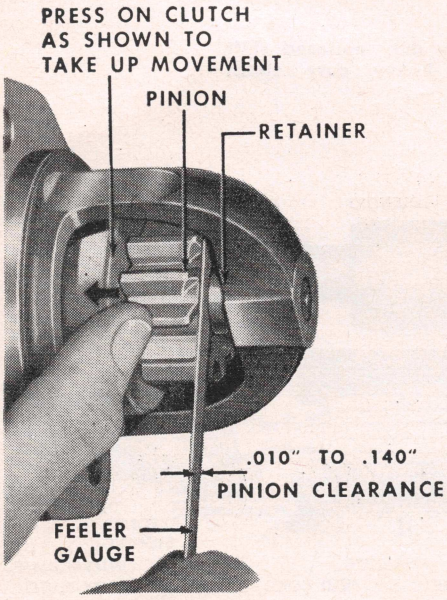

Fig. 52 Checking pinion clearance on intermediate duty clutch motor

Starting Motor Tests

Free Speed Test—With the circuit connected as shown in Fig. 50, use a tachometer to measure armature revolutions per minute. Failure of the motor to perform to specifications may be due to tight or dry bearings, or high resistance connections.

Pinion Clearance: There are no provisions for adjusting pinion clearance on motors using the intermediate duty clutch. However, this should be checked after reassembly of motor to make sure the clearance is within specifications. To check the pinion clearance, make connections as shown in Fig. 51. After energizing the solenoid with the clutch shifted toward the pinion stop retainer, push the pinion back toward the commutator end as far as possible to take up any slack movement, then check the clearance between pinion and pinion stop retainer with a feeler gauge, Fig. 52, If clearance is not within specified limits, check the solenoid linkage and shift lever yoke buttons for excessive wear.

The pinion clearance for motors using the heavy duty clutch is checked in the same manner as for intermediate duty clutches. The clearance for these motors, however, is measured as indicated in Fig. 53. The clearance is adjustable and is accomplished by removing the plug on the lever housing and turning the nut on the plunger rod inside the housing. Turn the nut clockwise to decrease clearance, and vice versa.

Disassembling Motor

Note the relative position of the solenoid, lever housing and nose housing so the motor can be reassembled in the same manner.

Intermediate Duty Clutch Motor—

1. Disconnect field coil connector from solenoid motor terminal, and remove solenoid mounting screws.
2. Remove thru bolts.
3. Remove commutator end frame from field frame and field frame from lever housing.
4. Remove nose housing attaching bolts and separate nose housing from lever housing.
5. Slide a ½" pipe coupling or other metal cylinder of suitable size onto shaft so end of coupling or cylinder butts against edge of retainer. Tap end of coupling with a hammer, driving retainer toward armature and off snap ring.
6. Remove snap ring from groove in shaft, using pliers or other suitable tool. If snap ring is too badly distorted during removal, use a new one when reassembling clutch.
7. Remove armature and clutch from lever housing.
8. Separate solenoid from lever housing.

Heavy Duty Clutch Motor—

1. Disconnect field coil connector from solenoid motor terminal and lead from solenoid ground terminal.
2. On motors having brush inspection plates, remove plates and then brush lead screws. This will disconnect the field leads from the brush holders.

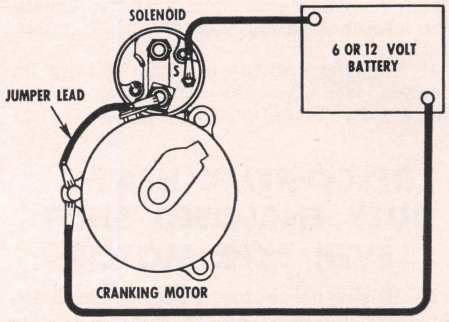

Fig. 51 Connections for checking pinion clearance

3. Remove attaching bolts and separate commutator end frame from field frame.
4. Separate nose housing and field frame from lever housing by removing attaching bolts.
5. Remove armature and clutch assembly from lever housing.
6. Separate solenoid from lever housing by pulling apart.

Cleaning

Follow cleaning instructions outlined for standard duty motors.

Reassembling Motor

The reassembly procedure for each type of motor is the reverse of disassembly. On motors using a snap ring and retainer on the shaft as a pinion stop, the ring and retainer can be assembled as follows:

With the retainer placed over the shaft with the cupped surface facing the end of the shaft, force the ring over the shaft with a light hammer blow and then slide the ring down into the groove. To force the retainer over the snap ring, place a suitable washer over the shaft and squeeze with pliers. Remove the washer, Fig. 54.

To reassemble the end frame having eight brushes onto the field frame, pull

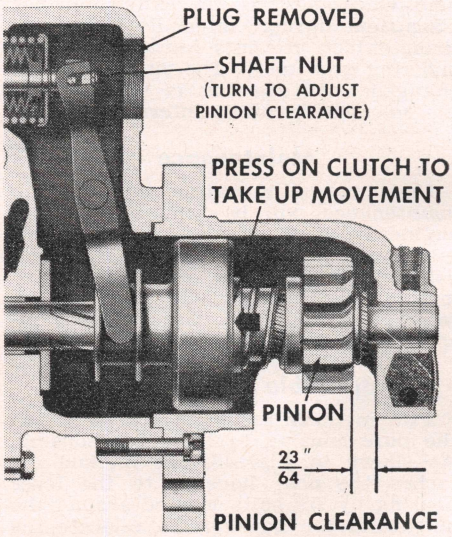

Fig. 53 Checking pinion clearance on heavy duty clutch motor

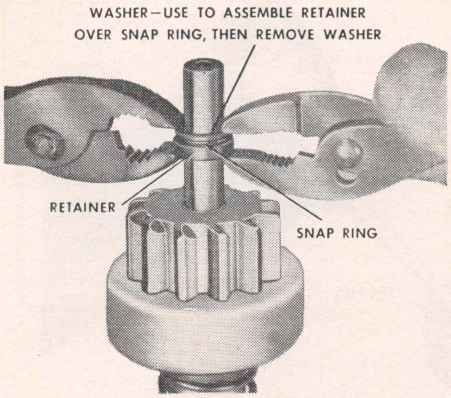

Fig. 54 Forcing retainer over snap ring

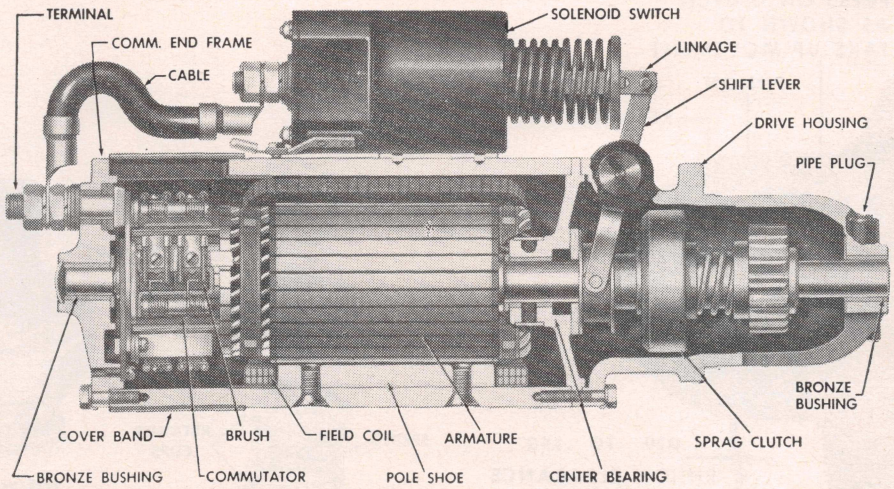

Fig. 56 Delco-Remy sprag clutch type motor

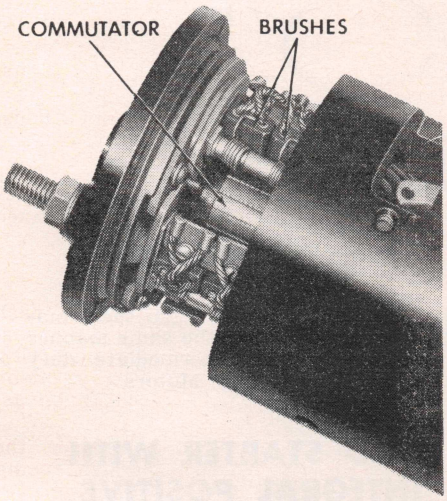

Fig. 55 Assembling end frame with eight brushes to field frame

the armature out of the field frame just far enough to permit the brushes to be placed over the commutator, Fig. 55. Then push the commutator end frame and the armature back against the field frame.

Lubrication

All wicks and reservoirs should be saturated with SAE 10 oil, and the splines underneath the clutch should be lubricated with a light coat of SAE 10 oil. *Heavier oil may cause failure to mesh at low temperatures.*

DELCO-REMY MOTOR WITH SPRAG CLUTCH DRIVE

The sprag type overrunning clutch, Fig. 56 and 57, has a high torque capacity made possible by dividing the load among many elements called sprags. These sprags are small billets of steel with the upper and lower surfaces rounded so the diagonals across the sprag are of unequal length. When the sprags are rotated so the longer diagonal approaches the vertical, a wedging action occurs, locking the inner race to the outer race. A contracting garter spring, placed around the sprag assembly, holds the sprags in the locked position with the sprags contacting the races so torque can be transmitted without delay when the armature starts rotating. Friction between the sprags and the inner and outer races tends to rotate the sprags in the locking position so that the locking action is increased with load.

When the engine begins to operate, it attempts to drive the starting motor armature faster than the armature rotates under its own power. This causes the pinion assembly to rotate with respect to the armature, and turns the sprags in the opposite direction so they become unlocked, allowing them to slide freely between the inner and outer races of the clutch. Now the pinion assembly can overrun (run faster than) the armature. This protects the armature from

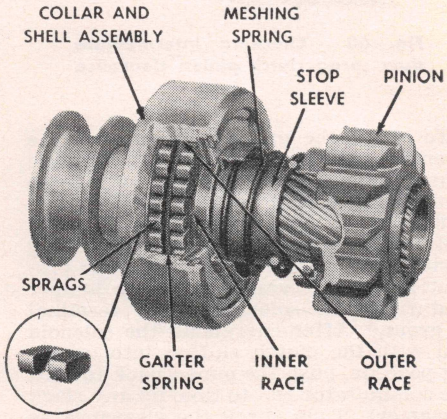

Fig. 57 View of heavy duty sprag clutch

rotating at high speeds during the brief period that the circuit is being broken in the solenoid which will release the clutch. There are two types of sprag clutch, Figs, 58 and 59.

Pinion Clearance

On overrunning clutch motors, including the sprag type, the clearance between the pinion and pinion stop or housing should be checked with the pinion in the cranking position after the motor has been disassembled and reassembled.

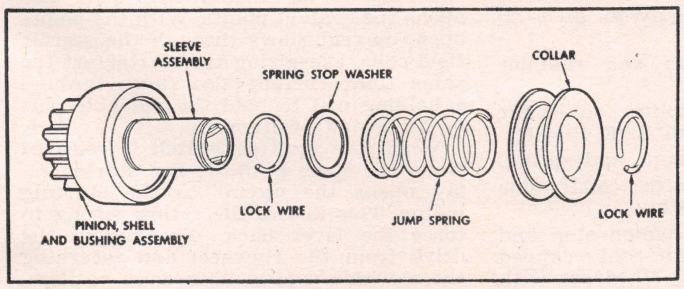

Fig. 58 Disassembled view of intermediate duty sprag clutch drive

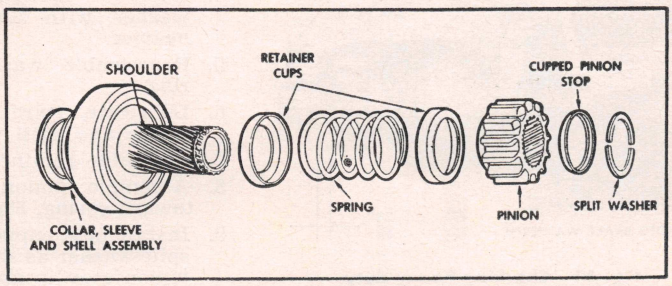

Fig. 59 Disassembled view of heavy duty sprag clutch drive

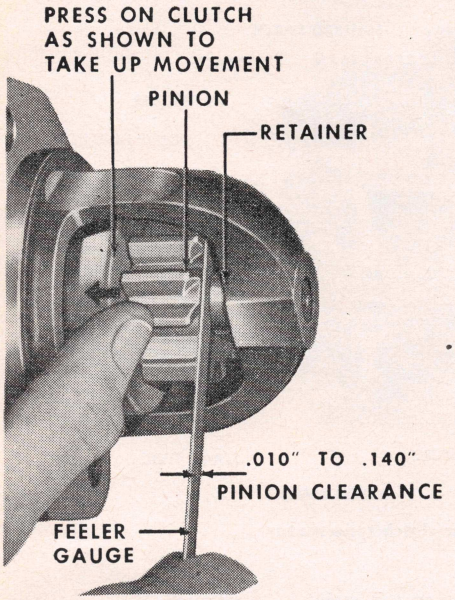

Fig. 60 Checking intermediate duty sprag clutch pinion clearance

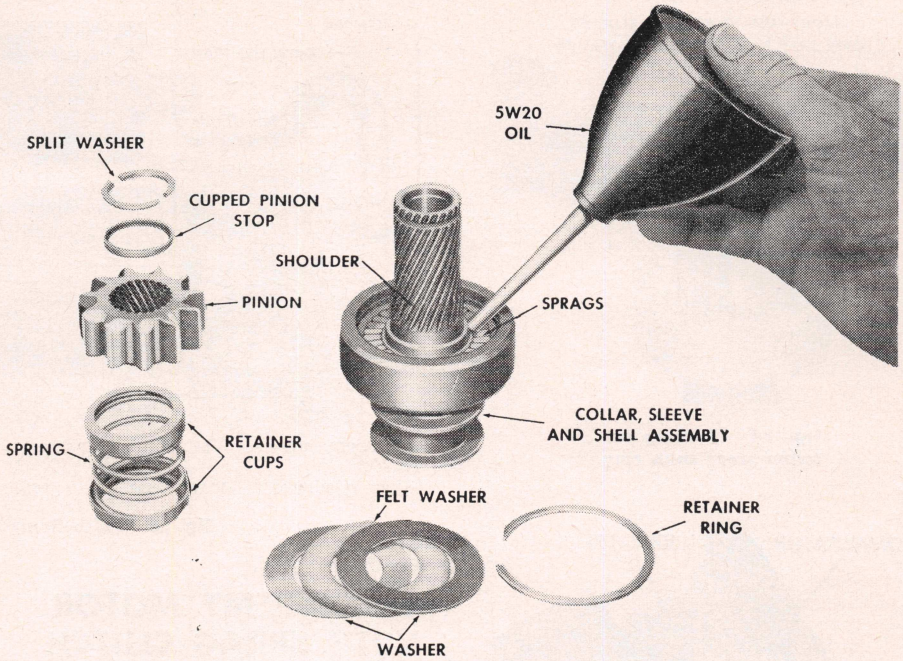

Fig. 62 Lubricating clutch sprags

To check the pinion clearance on the solenoid type motor, connect a voltage source (about one-half rated voltage so armature does not rotate) between terminals of the solenoid winding. This will shift the clutch pinion into cranking position. As a further precaution to prevent motoring, connect a heavy jumper lead from the solenoid motor terminal to ground. After energizing the solenoid and with the clutch shifted into cranking position, push the pinion back toward the commutator end to take up any slack movement. Then check the clearance as shown in Figs. 60 and 61. If the shift lever is manually controlled, the clutch can be shifted into cranking position by hand to check pinion clearance.

If the specified clearances are not obtained, it may indicate excessive wear of solenoid linkage or shift lever yoke buttons.

Intermediate Duty Sprag Clutch

1. Remove lock wire and collar from sleeve, Fig. 58.

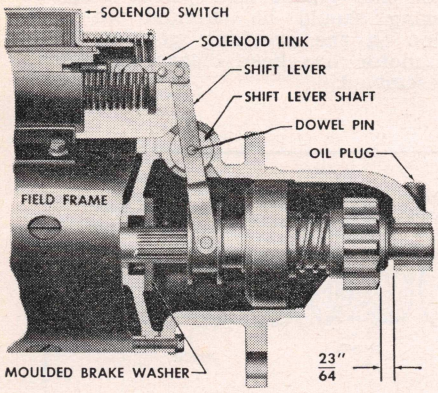

Fig. 61 Checking heavy duty sprag clutch pinion clearance

2. Remove jump spring, spring stop washer and second lock wire.
3. Remove retainer ring and large washers. Do not remove sleeve or sprags from shell.
4. Lubricate sprags, Fig. 62, and saturate the felt washer with SAE 5W20 oil. *Heavier oil must not be used.*
5. Reassemble washers and retaining ring.
6. Assemble lock wire in groove next to sprags; then assemble stop washer.
7. Assemble jump spring, collar and other lock wire.
8. Lubricate armature shaft with a few drops of SAE 10 oil before sprag clutch is reinstalled.

Heavy Duty Sprag Clutch

1. Remove cupped pinion stop and split washer, Fig. 62. In removing cupped pinion stop, it will probably be damaged to the extent that a new one will be required on reassembly.
2. Remove pinion, spring and retainer cups.
3. Remove retainer ring and washers. *Do not remove collar sleeve and shell, or sprags from shell.*
4. Lubricate sprags and saturate felt washer with SAE 5W20 oil — no heavier.
5. Reassemble washers and retainer ring.
6. Lubricate spiral spline on collar sleeve and shell with SAE 10 oil.
7. Assemble retainer cups and spring.
8. Assemble pinion with collar side toward spring, Fig. 62.
9. Install new cupped pinion stop and split washer as shown. Stake cupped pinion stop in about 10 places with a round-nosed tool.

Removing Intermediate Duty Clutch

Removal of the clutch from the armature is accomplished in the same manner as outlined for the intermediate duty clutch on Heavy Duty Motors.

FORD STARTER WITH INTEGRAL POSITIVE ENGAGEMENT DRIVE

This type starting motor, Fig. 63, is a four pole, series parallel unit with a positive engagement drive built into the starter. The drive mechanism is engaged with the flywheel by lever action before the motor is energized.

When the ignition switch is turned on to the start position, the starter relay is energized and supplies current to the motor. The current flows through one field coil and a set of contact points to ground. The magnetic field given off by the field coil pulls the movable pole, which is part of the lever, downward to its seat. When the pole is pulled down, the lever moves the drive assembly into the engine flywheel, Fig. 64.

When the movable pole is seated, it functions as a normal field pole and opens the contact points. With the points open, current flows through the starter field coils, energizing the starter. At the same time, current also flows through a holding coil to hold the movable pole in its seated position.

When the ignition switch is released from the start position, the starter relay opens the circuit to the starting motor. This allows the return spring to force the lever back, disengaging the drive from the flywheel and returning the movable pole to its normal position, Fig. 65.

Disassembly

It may not be necessary to disassemble the starter completely to accomplish repair or replacement of certain parts. Thus, before disassembling the motor, remove the cover band and starter drive actuating lever cover. Examine brushes to make sure they are free in their holders. Replace brushes if defective or worn beyond their useful limit. Check the tension of each brush spring with a pull scale. Spring tension should not be less than 45 ounces. If disassembly is necessary, proceed as follows:

1. Remove cover band and starter drive actuating lever cover.
2. Remove through bolts, starter drive gear housing, drive gear retaining clip cup and starter drive actuating lever return spring.
3. Remove pivot pin retaining starter gear actuating lever and remove lever and armature.
4. Remove and discard spring clip retaining starter drive gear to end of armature shaft, and remove starter drive gear.
5. Remove commutator brushes from brush holders and remove brush end plate.
6. Remove two screws retaining ground brushes to frame, Fig. 66.
7. On the field coil that operates the drive actuating lever, bend tab up on field retainer and remove retainer.
8. Remove field coil retainer screws, Fig. 67. Unsolder field coil leads from terminal screw, and remove pole shoes and coils from frame.
9. Remove starter terminal nut and related parts. Remove any excess solder from terminal slot.

Reassembly

1. Install starter terminal, insulator, washers and retaining nut in frame, Fig. 66. Be sure to position slot in screw perpendicular to frame end surface.
2. Install field coils and pole pieces. As pole shoe screws are tightened, strike frame several sharp blows with a soft-faced hammer to seat and align pole shoes, then stake the screws.
3. Install solenoid coil retainer and bend tabs to retain tabs to frame.
4. Solder field coils and solenoid wire to starter terminal, using rosin core solder.
5. Check for continuity and grounds in the assembled coils.
6. Position solenoid coil ground terminal over ground screw hole nearest starter terminal.
7. Position ground brushes to starter frame and install retaining screws, Fig. 66.
8. Position starter brush end plate to frame with end plate boss in frame slot.
9. Install drive gear to armature shaft and install a new retaining spring clip.
10. Position fiber thrust washer on commutator end of armature shaft and install armature in frame.
11. Install starter drive actuating lever to frame and starter drive, and install pivot pin.
12. Position actuating lever return spring and drive gear housing to frame and install through bolts. Do not pinch brush leads between brush plate and frame.
13. Install brushes in holders, being sure to center brush springs on brushes.
14. Position drive gear actuating lever cover on starter and install brush cover band.
15. Check starter for free running and install on engine.

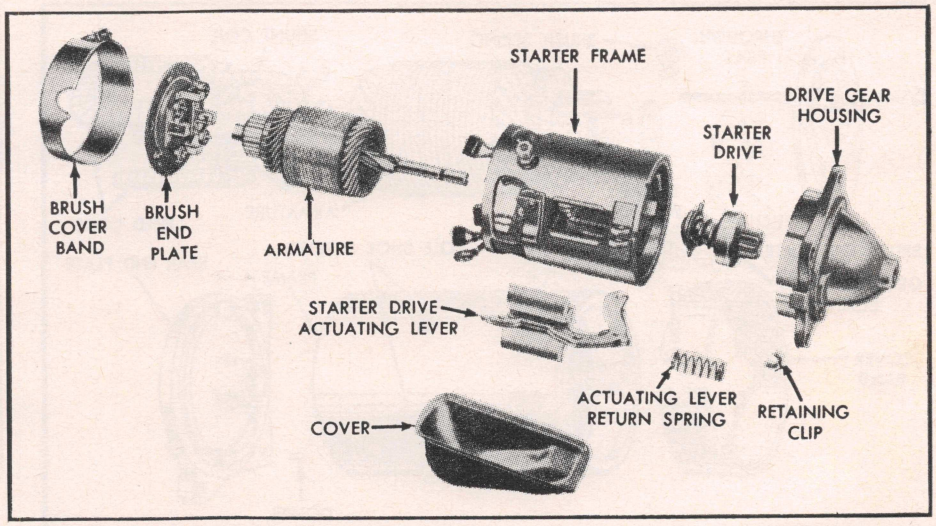

Fig. 63 Ford starter with an integral positive engagement drive

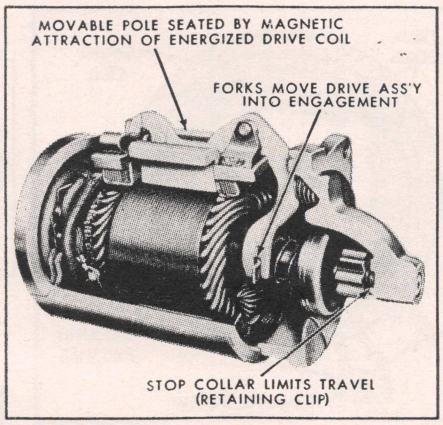

Fig. 64 Starter drive engaged

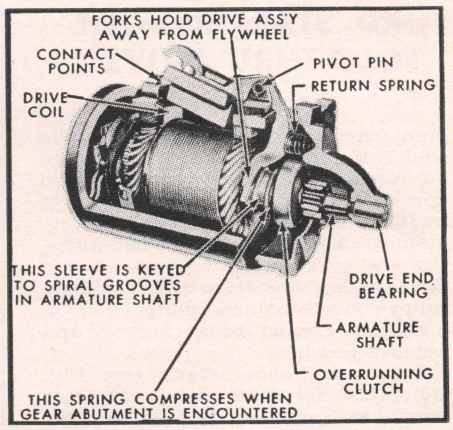

Fig. 65 Starter drive disengaged

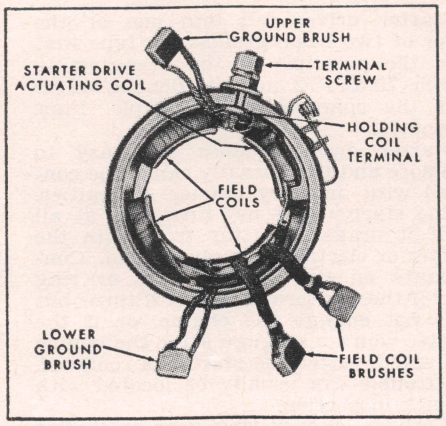

Fig. 66 Field coil assembly

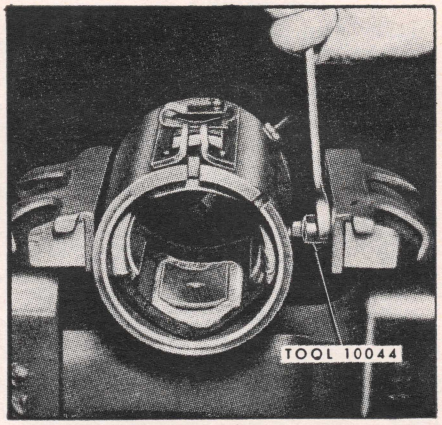

Fig. 67 Removing field coil pole shoe screws

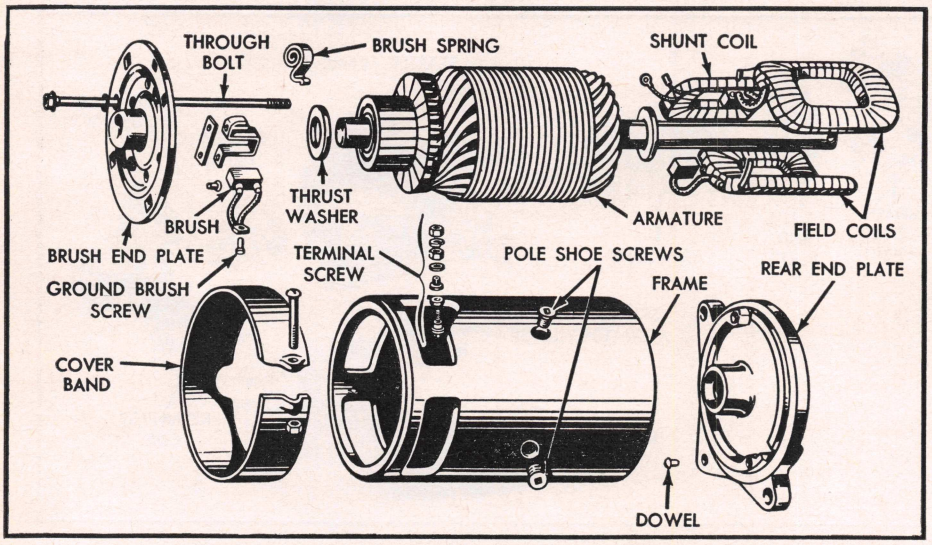

Fig. 68 Ford starter used with Folo-Thru drive

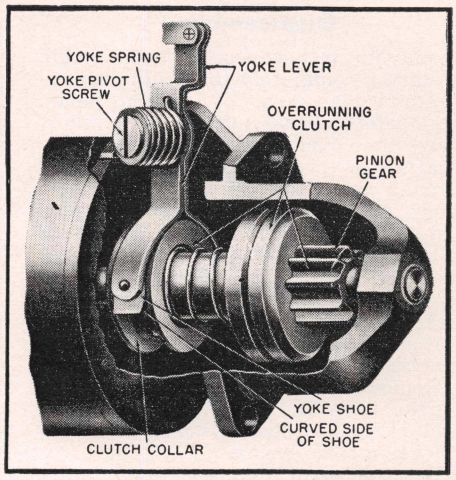

Fig. 70 Overrunning clutch drive. When assembling make sure curved sides of yoke shoes are toward gear end of clutch. Reversed yoke shoes can cause improper meshing of pinion

FORD STARTER WITH FOLO-THRU DRIVE

Disassembly

1. Remove starter drive, through bolts and rear end plate, Fig. 68. *Be sure to remove all burrs from shaft to prevent scoring rear end plate bushing.*
2. Remove armature, two thrust washers and cover band.
3. Remove brushes from their holders, and remove brush end plate.
4. Unscrew ground brush screws and remove brushes.
5. Remove pole shoe screws (see Fig. 67). Unsolder field coil leads from terminal screw and remove pole shoes and field coils.
6. Remove starter terminal, Remove any excess solder from terminal slot.

Reassembly

1. Install terminal screw with insulator washers and terminal nut. Be sure to position slot in screw parallel to frame end surface.
2. Install field coils. Use rosin core solder and be sure to position shunt coil ground lead under ground brush terminal farthest from starter terminal, Fig. 69. The other shunt coil lead is soldered to the series field coil lead farthest from starter terminal.
3. Install screws that connect ground brushes to starter frame.
4. Install brush end plate, making sure that brush plate boss is located in slot in starter frame. Do not pinch brush leads between frame and end plate.
5. Place thrust washer on each end of shaft, slide armature in place, and install rear end plate with dowel located in starter frame slot.
6. Install through bolts.
7. Install brushes in their holders, being sure to center brush springs on brushes.
8. Install cover band and starter drive. Check starter for free running.

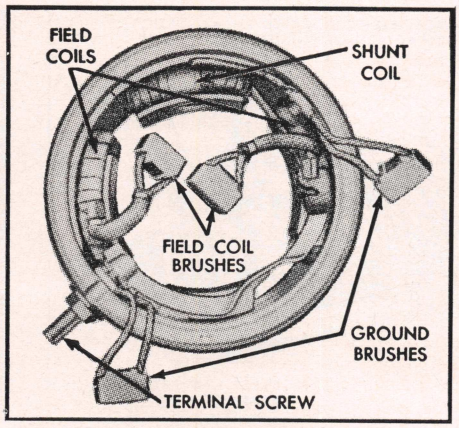

Fig. 69 Field coil assembly

STARTER DRIVE SERVICE

Starter drives fall into one or the other of two basic groups, the type that uses the principle of the over-running clutch, 70 and 72, and the Bendix, which uses the spinning nut principle, Figs. 71 and 73.

Starter drive troubles are easy to diagnose and they usually cannot be confused with ordinary starter difficulties. If the starter does not turn over at all or if it drags, look for trouble in the starter or electrical supply system. Concentrate on the starter drive or ring gear if the starter is noisy, if it turns but does not engage the engine, or if the starter won't disengage after the engine is started. After the starter is removed, the trouble can usually be located with a quick inspection.

Worn or chipped ring gear or starter pinion are the usual causes of noisy operation. Before replacing either or both of these parts, try to find out what caused the damage. With the Bendix type drive, incomplete engagement of the pinion with the ring gear is a common cause of tooth damage. The wrong pinion clearance on starter drives of the over-running clutch type leads to poor meshing of the pinion and ring gear and too rapid tooth wear.

A less common cause of noise with either type of drive is a bent starter armature shaft. When this shaft is bent, the pinion gear alternately binds and then only partly meshes with the ring gear. Most manufacturers specify a maximum of .003″ radial run-out on the armature shaft.

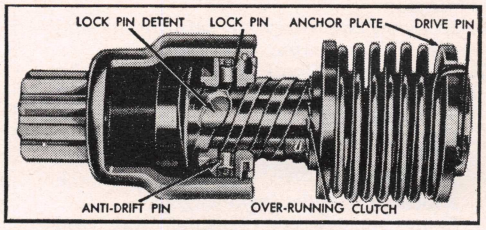

Fig. 71 Folo-Thru starter drive with Bendix spring

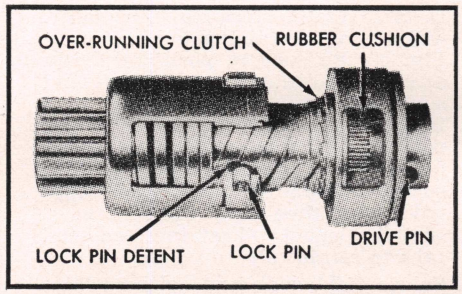

Fig. 72 Folo-Thru starter drive without Bendix spring

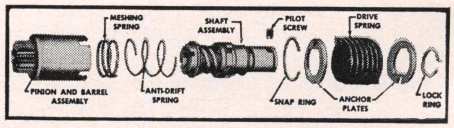

Fig. 73 Barrel type Bendix drive

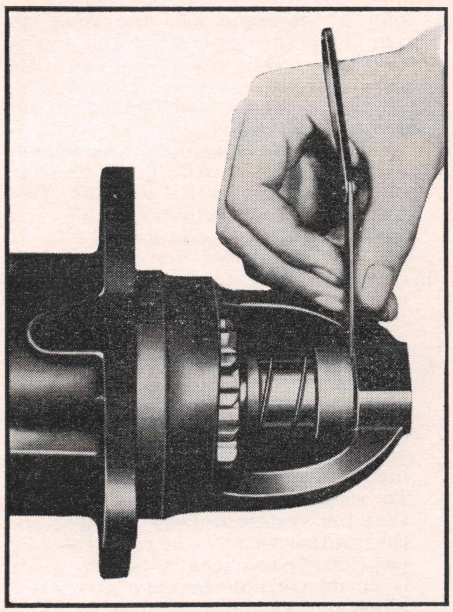

Fig. 74 Measuring overrunning clutch drive stop clearance. Do not compress anti-drift spring as this will give an incorrect clearance. If clearance is not present there is danger of the drive housing being broken as gear or collar slams back against it

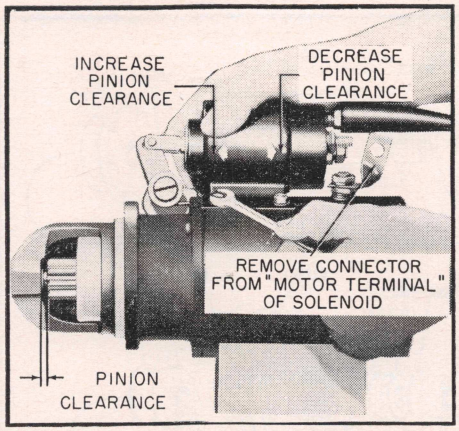

Fig. 75 Adjusting pinion clearance on overrunning clutch motor with an exposed solenoid having a non-adjustable plunger stud

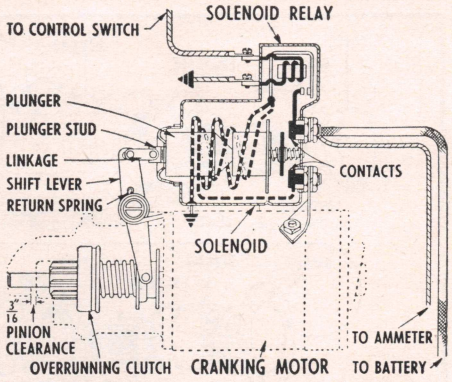

Fig. 76 Overrunning clutch motor equipped with adjustable plunger stud for adjusting pinion clearance

When Clutch Drive Fails

The over-running clutch type drive seldom becomes worn that they fail to engage since they are directly activated by a fork and lever, Fig. 70. The only thing that is likely to happen is that, once engaged, it will not turn the engine because the clutch itself is worn out. A much more frequent difficulty and one that rapidly wears ring gear and teeth is partial engagement. Proper meshing of the pinion is controlled by the end clearance between the pinion gear and the starter housing or the pinion stop, if one is used.

The clearance is set with the starter off the vehicle and with the drive in the engaged position. While it is not feasible to list the clearances for all starters used on all trucks, the idea is to have enough clearance so that the drive does not slam against the end of the drive housing or pinion stop when it is engaged.

To check the clearance, supply current to the starter solenoid with the electrical connection between starter and solenoid removed. Supplying current to the solenoid but not the starter will prevent the starter from rotating during the test. Take out all slack by pushing lightly on the starter drive clutch housing while inserting the proper thickness feeler gauge between pinion and housing or pinion stop, Fig. 74.

On a number of late model starters, starting with 1957, the solenoids are completely enclosed in the starter housing and the pinion clearance is not adjustable. If the clearance is not correct, the starter must be disassembled and checked for excessive wear of solenoid linkage, shift lever mechanism, or improper assembly of parts.

On starters where the solenoid is exposed, the clearance can be adjusted either by loosening the screws holding the solenoid to the starter and moving the solenoid forward and backward, Fig. 75, or by screwing or unscrewing the link attached to the solenoid plunger, Fig. 76.

Failure of the over-running clutch drive to disengage is usually caused by binding between the armature shaft and the drive. If the drive, particularly the clutch, shows signs of overheating, it indicates that it is not disengaging immediately after the engine starts. If the clutch is forced to over-run too long, it overheats and turns a bluish color. For the cause of the binding, look for rust or gum between the armature shaft and the drive, or for burred splines. Excess oil on the drive will lead to gumming, and inadequate air circulation in the flywheel housing will cause rust.

Over-running clutch drives cannot be overhauled in the field so they must be replaced. In cleaning, never soak them in a solvent because the solvent may enter the clutch and dissolve the sealed-in lubricant. Wipe them off lightly with kerosene and lubricate them sparingly with SAE 10 or 10W oil.

When Bendix Drive Fails

When a Bendix drive doesn't engage the cause usually is one of three things: either the drive spring is broken, one of the drive spring bolts has sheared off, or the screwshaft threads won't allow the pinion to travel toward the flywheel. In the first two cases, remove the drive by unscrewing the set screw under the last coil of the drive spring and replace the broken parts. Gummed or rusty screwshaft threads are fairly common causes of Bendix drive failure and are easily cleaned with a little kerosene or steel wool, depending on the trouble. Here again, as in the case of over-running clutch drives, use light oil sparingly, and be sure the flywheel housing has adequate ventilation. There is usually a breather hole in the bottom of the flywheel housing which should be kept open.

The failure of a Bendix drive to disengage or to mesh properly is most often caused by gummed or rusty screwshaft threads. When this is not true, look for mechanical failure within the drive itself.

Bendix Folo-Thru Drive

This type of drive, Figs. 71, 72, is in wide use on late model starters. It incorporates a device that keeps the pinion engaged to the flywheel until the engine reaches a specified rpm. When replacing one of these drives, be sure that you have the correct drive for the vehicle. The drives are rated differently and the correct one must be used for the vehicle being serviced. The Folo-Thru, incidentally, is not supposed to be repaired in the field because of the danger of incorrectly assembling the carefully calibrated springs in the pinion head.

AIR STARTING MOTOR

The principle components of the "Startaire" assembly are a multi-vane type air rotor, a reduction gear assembly, and a friction clutch type drive. Compressed air in the correct volume and pressure range is used to provide the necessary cranking power. Fig. 77 shows an exploded view of an air cranking motor.

The motors are available in two sizes. Model 17 delivers approximately 17 horsepower at 100 psi air pressure with a pinion rpm of 2300. In general, model 17 cranks all engines up to approximately 1100 cubic inch displacement. Model 30 delivers approximately 30 horsepower at 100 psi air pressure with a pinion rpm of 2000. It is normally used on engines of 1100 cubic inch displacement or more.

Fig. 78 shows the various devices used in a "Startaire" installation. A pressure protection valve is used in the air supply line to protect the basic air system on the vehicle against complete loss of air during starting operation. A rubber seated single check valve permits maintenance of the Startaire system as a self-contained system in which leakage can be minimized. A control valve and air pressure gauge registering air pressures in the air starting system are in-

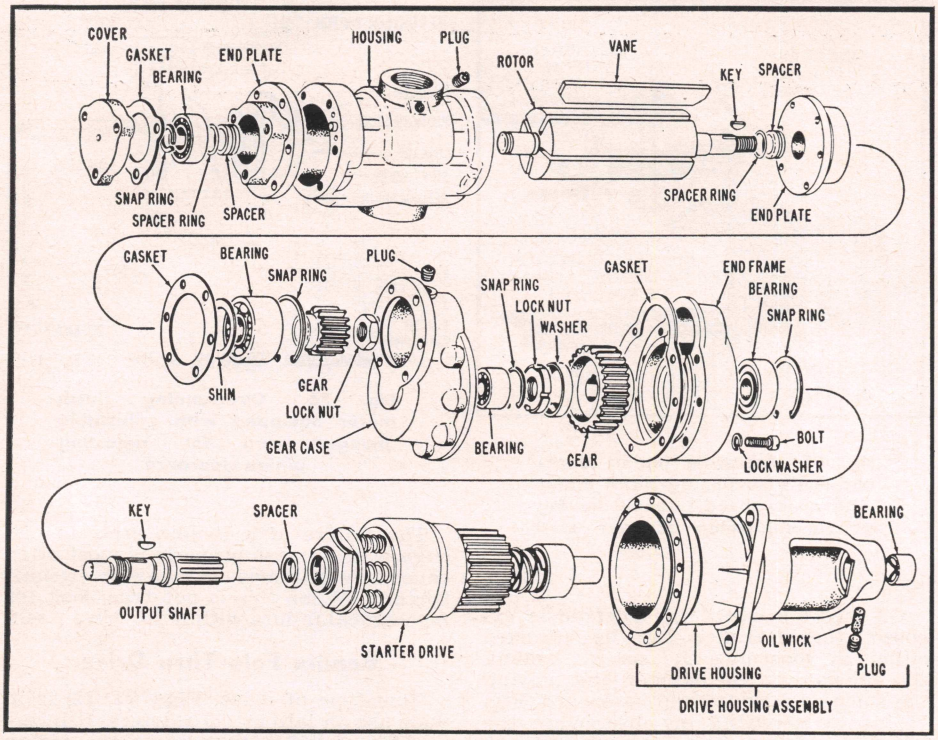

Fig. 77 "Startaire" air cranking motor

stalled close to the driver's position. An air starting valve which opens or closes the air line between the starter reservoir and motor, as controlled by the control valve, is mounted on or close to the motor as possible. The motor is installed on the engine in the usual location provided for starting motors. One or two reservoirs are installed in the system to provide a sufficient volume of compressed air to the system. A tire valve, tire chuck and hose coupling are provided to replenish the system from an outside source should it be required.

Operation

For operation, 100 psi or more should register on the air starter system air gauge. Before starting the engine, be sure that all engine adjustments and prior starting procedures are carried out. Depress the knob on the control valve. This action allows air to turn the motor and engage the flywheel. The control valve knob should be kept fully depressed until the engine fires. Release the control valve immediately when the engine fires to allow the drive gear to disengage the flywheel.

Preventive Maintenance

1. Daily or as often as necessary, drain the reservoir to be sure clean dry air is delivered to the motor.
2. Monthly or about every 5000 miles of service, remove pipe plug or grease fitting at air inlet port or air inlet fitting at the motor and inject ½ pint of kerosene into the rotor assembly before operating the motor. *Caution: Do not over-lubricate. Over-lubrication or use of lubricants of heavy consistency can cause improper operation. Do not perform the above flushing operation indoors as the kerosene will be discharged at the exhaust outlet with the first start. Also be certain that there is no open flame in the vicinity to ignite the exhausted kerosene.*
3. Check to see that the motor mounting is secure to the flywheel housing. Check all air lines and valves in the system for leakage.
4. Test the operation of the motor. The unit should turn over the engine quickly and at high revolutions per minute. Be sure that air pressure and volume are correct for motor requirements in making this test.
5. To make a leakage test, first see that the system is fully charged and the control valve is in fully released position. Then check to be sure there is no measurable leakage at the exhaust port of motor, at control valve knob, at tire valve, or at other possible leakage points in the system.
6. Periodically check all other devices, fittings and air lines to be sure they are tight.

Remove & Install Motor

1. Disconnect air line at control valve on Model 17 or air line at motor on Model 30.
2. On Model 17, remove motor control valve.
3. Unfasten motor housing from flywheel housing and lift out motor.
4. Reverse removal procedure to install.

Disassemble Motor

1. After covering inlet and exhaust ports, clean the exterior of the motor.
2. The original position of the mating parts should be marked. *This is important because if the rotor housing is turned end for end when reassembled, the motor will rotate in the opposite direction, the pinion will not engage and the motor could rotate at dangerous speeds.*
3. Remove drive unit housing.
4. Remove drive unit by pulling off splines of driven shaft, Fig. 79. If necessary to replace sleeve bearing in drive housing, remove oil wick and press out bearing.
5. When disassembling Model 30, remove set screw in clutch to permit removal of drive unit from driven shaft, Fig. 80. This unit contains a spring at the end of the driven shaft. In Model 30, if it is necessary to replace the needle bearing in drive housing, drive off end cap and press out bearing.
6. Remove spacer from driven shaft on Model 17.
7. Remove capscrews from cover and remove cover, driven shaft and gear, Figs. 81 and 82.
8. Release lockwasher on driven gear and remove lock nut. Use puller to remove gear from driven shaft.
9. For Model 17, remove key and press driven shaft out of bearing. Remove snap ring and press bearing from gear case cover.

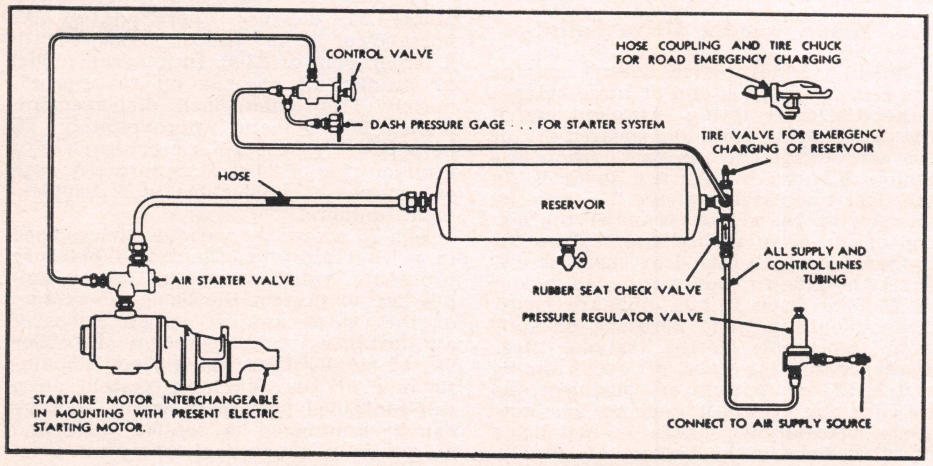

Fig. 78 Typical air starter installation

10. For Model 30, remove capscrews from bearing retainer plate and press bearing and shaft from cover after which press bearing from driven shaft.
11. Remove capscrews securing gear case to main housing, including the two capscrews inside the case.
12. Before removing gear case on Model 17, remove lock wire inside case. Then remove gear.
13. Remove snap ring from roller bearing and press out bearing which is a sliding fit in case.

Removing Model 17 Rotor

1. Remove gear end plate and rotor from housing. Dowels in main case position end plates correctly.
2. When removing rotor from main housing, inner race of roller bearing remains on rotor shaft. Do not remove it unless bearing is to be replaced.
3. Remove rotor vanes to protect them from damage.
4. Remove lock nut and take off drive gear from rotor shaft with the aid of a gear puller.
5. Remove key from rotor shaft and press rotor from bearing and gear end plate, using an arbor press.
6. Rotor and shaft are serviced as a unit. *A spacer is pressed on each rotor shaft. Do not remove spacer unless replacement is required. If roto is to be reassembled using the same parts, the shims located between the spacer on the gear end of the rotor shaft and bearing inner race can be reused if not damaged.* Remove snap ring in gear end plate. Bearing is a light press fit in plate.
7. Remove plain end plate cover.
8. Remove plain end plate from housing and press out bearing.

Removing Model 30 Rotor

1. After removing drive gear from rotor shaft with a gear puller, remove gear end plate and bearing from rotor shaft. There are dowels on end plate for positioning plate correctly.
2. Remove snap ring holding roller bearing in gear end plate. Bearing is a light press fit in plate and can easily be removed.
3. Bearing inner race normally remains on shaft. Do not remove it unless a new bearing is required.
4. Remove plain end plate cover.
5. Remove end plate from main housing and lift end plate and rotor as a unit out of case.
6. Remove rotor vanes to protect them from damage. Release lockwasher and remove lock nut. Carefully press rotor from end plate or use a gear puller to remove end plate from rotor. Bearing is a light press fit in end plate. *Do not misplace or damage shims between rotor shaft shoulder and bearing inner race because the same shims can be used again for reassembly if the same parts are to be reused. The rotor and shaft are serviced as a unit only.*

Inspection of Parts

1. Clean and inspect all parts. Any broken or excessively worn parts must be replaced with new ones.
2. Inspect rotor, housing and end plates for cracks, abrasions, wear spots or build-up of foreign material. Cracked castings must be replaced. Rough or worn spots can sometimes be smoothed out with fine emery cloth. Deposits of gum, carbon, or other foreign material must be removed. Wash and dry all parts.
3. Rotor vanes should be inspected for cracks and wear and should normally be replaced.
4. Gears should be replaced if excessively worn or if teeth are broken.
5. For Model 30 the gear splines should be a light press fit on shaft splines. If fit is loose, replace parts.
6. Broken seal rings must be replaced.
7. Seal ring bores in end plates should be checked for excessive wear or roughness.
8. Seal ring grooves should be checked for visible wear.
9. Bearings should be checked for visible wear and replaced if necessary.
10. New gaskets should be used when reassembling.

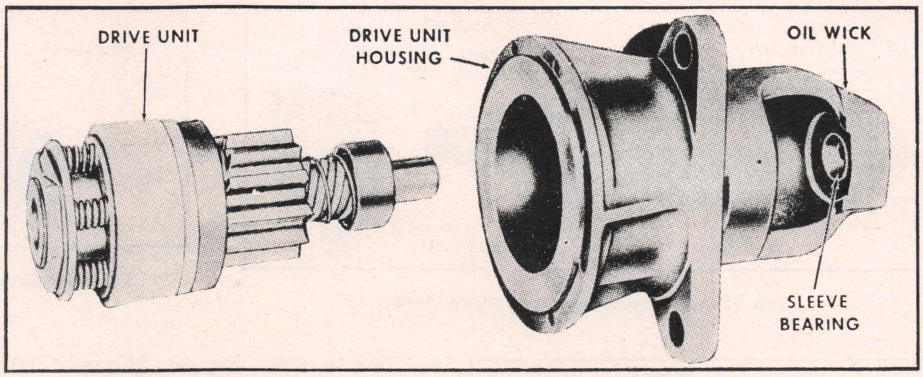

Fig. 79 Drive end and housing. Model 17

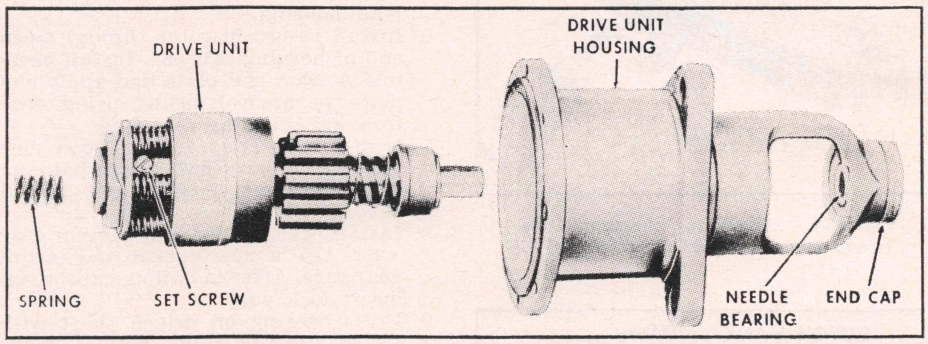

Fig. 80 Drive end and housing. Model 30

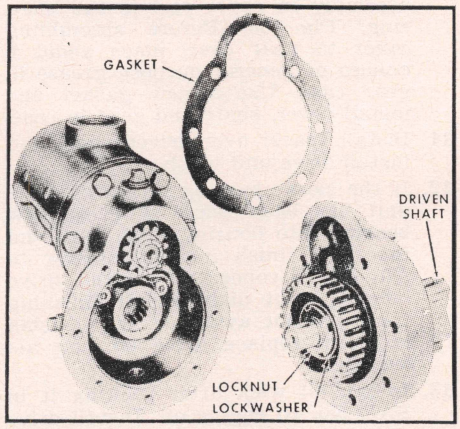

Fig. 81 Cover, shaft and gear. Model 17

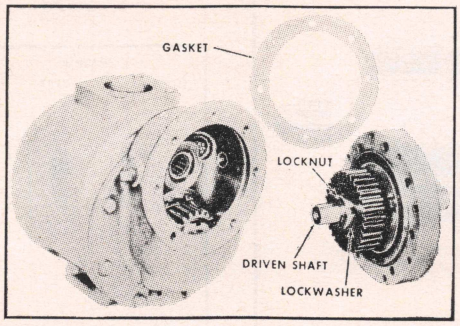

Fig. 82 Cover, shaft and gear. Model 30

Reassemble Model 17 Rotor

1. Install spacers and seal rings on rotor shaft. Press roller bearing on rotor shaft and install snap ring. Press bearing into gear end plate and replace bearing lock wire.
2. Place shims on gear end of rotor shaft. If same parts are being reused, use same shims if undamaged, as originally removed. If new parts are being used, use .015" of shims for

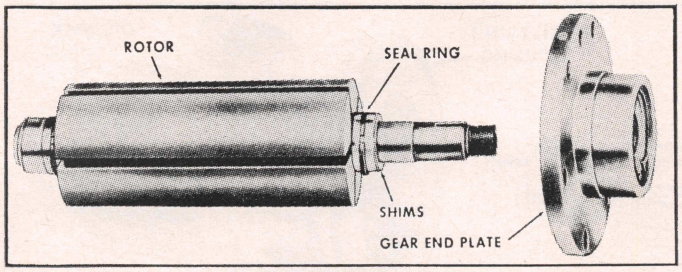

Fig. 83 Rotor and gear end plate. Model 17

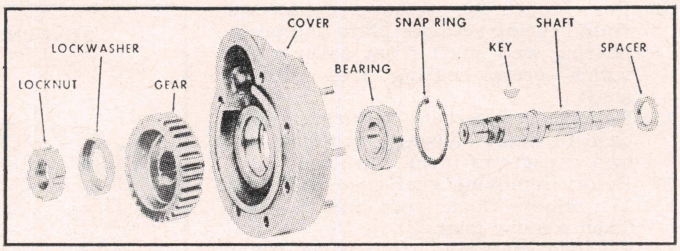

Fig. 86 Cover, driven shaft and gear parts. Model 17

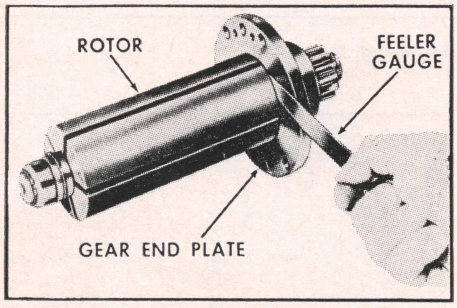

Fig. 84 Checking clearance between rotor and end plate. Model 17

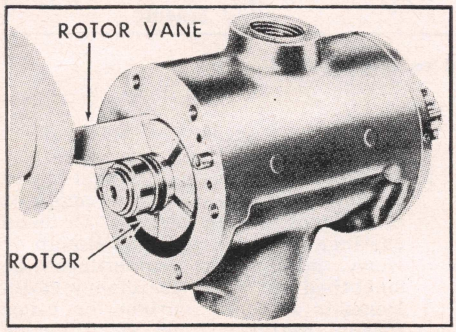

Fig. 85 Installing vanes. Model 17

initial installation, subject to adjustment as given below.

3. Press bearing and gear end plate on rotor shaft, Fig. 83. Install key, drive gear and locknut on rotor shaft.
4. Check clearance between rotor and gear end plate. Clearance should be .002 to .003″, Fig. 84. Shims of .002, .003 and .005″ are available for adjustment.
5. After obtaining proper clearance, install rotor and gear end plate in main housing.
6. Install valves in rotor through open end of housing, Fig. 85. Install bearing in plain end plate and apply end plate to main housing, using care to avoid breaking seal ring.
7. Install capscrews and, using a new gasket, fill cover half full of ball and roller bearing grease and install cover.
8. Install bearing and snap ring in gear case. Use a new gasket and install gear case. After installing capscrews, insert lock wire.
9. Press bearing on driven shaft with its seal facing spline end of shaft. Install key, driven gear, lockwasher and lock nut.
10. Install driven shaft, bearing and gear assembly in cover and install snap ring, Fig. 86. Before assembling cover to gear case, place about 6 ounces of general purpose grease in gear case. Use a new gasket and install cover, shaft and gear in case.
11. Install spacer over driven shaft and install drive unit on shaft.
12. If the sleeve bearing in end of drive unit has been removed, press new bearing into housing flush with end face and finish inside diameter to .751-.752″ concentric with drive housing pilot diameter. If finishing tools are not available and bearing is worn, replace drive housing assembly.
13. Install oil wick after soaking it in SAE No. 10 engine oil. Install drive unit to gear case cover.

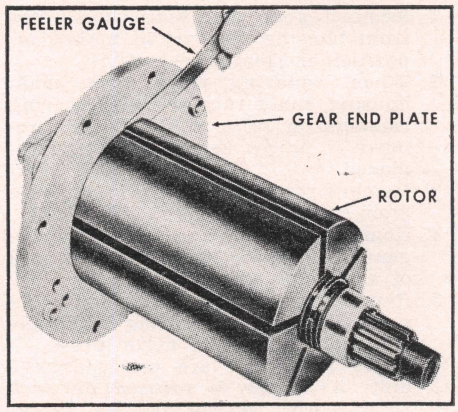

Fig. 88 Checking clearance between rotor and end plate. Model 30

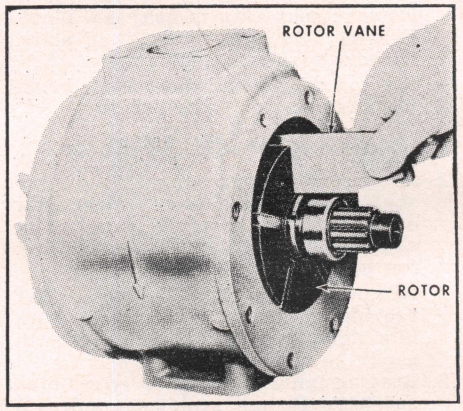

Fig. 89 Installing vanes. Model 30

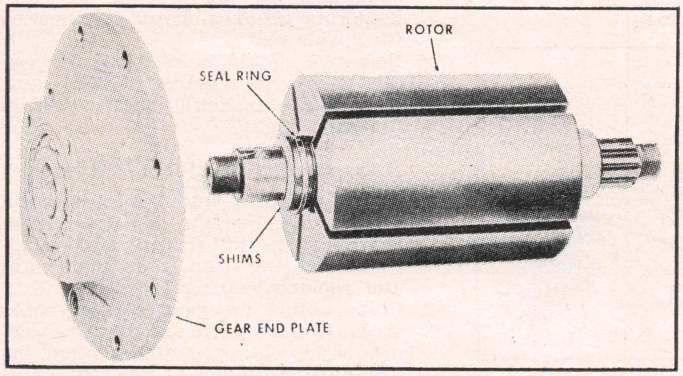

Fig. 87 Rotor and gear end plate. Model 30

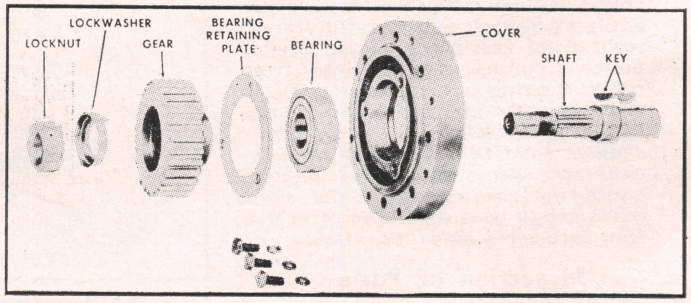

Fig. 90 Cover, driven shaft and gear parts. Model 30

Reassemble Model 30 Motor

1. Install bearing in plain end plate, and seal rings on rotor shaft.
2. Install bearing on rotor shaft.
3. Install spacer shims on plain end rotor shaft, Fig. 87. If new parts are being used, start with about .009″ shim thickness for initial installation subject to adjustment as given below.
4. Press bearing and plain end plate over rotor shaft, using care to avoid breaking seal ring. Install lockwasher and lock nut. Do not flatten lockwasher until .003″ end clearance between rotor and plain end plate is obtained.
5. Install new gasket between small cover and end plate and install cover temporarily. Check clearance as shown in Fig. 88. Adjust as necessary to obtain .003″ clearance between rotor shaft shoulder and bearing inner race. Shims of .002, .003 and .005″ thicknesses are available for adjustment.
6. After clearance is obtained, remove small cover and fill it half full with bearing grease and reinstall cover.
7. Install rotor and plain end plate on main housing. Install rotor vanes through open gear end of housing, Fig. 89. Press bearing into gear end plate and install snap ring.
8. Install gear end plate to main housing, using care to avoid breaking seal ring.
9. Install gear on rotor shaft. Install new lockwasher and pull gear into position and install lock nut.
10. Press roller bearing in gear, install washer and snap ring, Fig. 90.
11. Using new gasket between end plate and gear case, install gear case.
12. Press bearing on driven shaft with its seal facing drive unit. Install bearing and shaft in cover, and bearing retainer plate, Fig. 90.
13. Press driven gear over splined end of shaft and install lockwasher and lock nut.
14. Place about 8 ounces of general purpose grease in gear case and install case. Using a new gasket, install cover and gear sub-assembly to gear case.
15. Install two keys and drive unit on driven shaft after installing spring between end of driven shaft and drive unit. Install and tighten set screw in drive unit. Install needle bearing in housing flush with drive face. Fill end cap half full with bearing grease before pressing into place.

STARTING SWITCHES

MAGNETIC AND SOLENOID SWITCHES are designed to perform mechanical jobs electromagnetically such as closing a heavy circuit or shifting the starter drive pinion with the engine flywheel ring gear for cranking. Switches of this type consist basically of contacts and a winding (or windings) around a hollow cylinder containing a movable core or plunger. When the winding (or windings) is energized by the battery through an external control circuit the plunger is pulled inward, producing the necessary mechanical movement.

MAGNETIC SWITCHES

Figs. 1 and 2 illustrate two typical Delco-Remy switches. The switch shown in Fig. 1 is not designed for disassembly and must be replaced if defective.

In the switch shown in Fig. 2 the terminals are assembled into a molded terminal ring which is held in place on the switch case by the cover and screws. Gaskets on both sides of the ring seal the contact compartment as a protection against moisture and dirt. The winding assembly is not removable from the case on this unit although the contact disk, plunger and plunger return spring can be removed after the cover is taken off.

Fig. 3 is a heavy duty magnetic switch. It is completely serviceable and easy to disassemble and assemble. To disassemble, remove the four terminal plate nuts and washers and take off the terminal plate assembly. The contact disk may be removed by taking off the castellated nut. It is necessary to remove the spring and washers on the plunger rod only when the rod needs to be disassembled. To remove the plunger, unscrew the large metal cover, take out the cotter pin in the plunger shaft, remove the spring retainer washer and spring, and withdraw the plunger. The winding and switch case is an integral assembly. The only parts that can be removed are the switch terminals. Before removing the switch terminals, the winding leads must be unsoldered from the terminal studs. Whenever the switch is disassembled, upon reassembly, locate the contact disk properly by turning the castellated nut in or out as required to obtain the dimension shown in Fig. 3 between the contact disk and edge of housing.

SOLENOID SWITCHES

The solenoid switch on a cranking motor not only closes the circuit between the battery and the cranking motor but also shifts the drive pinion into mesh with the engine flywheel ring gear. This is done by means of a linkage between the solenoid switch plunger and the shaft lever on the cranking motor. Some linkages are adjustable while others are

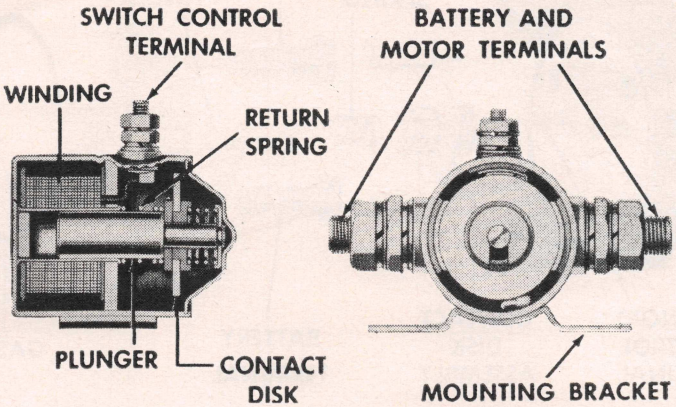

Fig. 1 End and sectional views of a typical magnetic switch

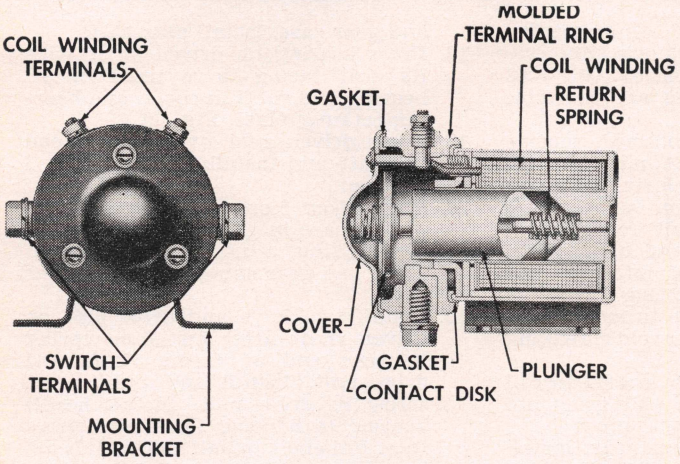

Fig. 2 End and sectional views of a sealed type magnetic switch which uses gaskets to seal the contact compartment

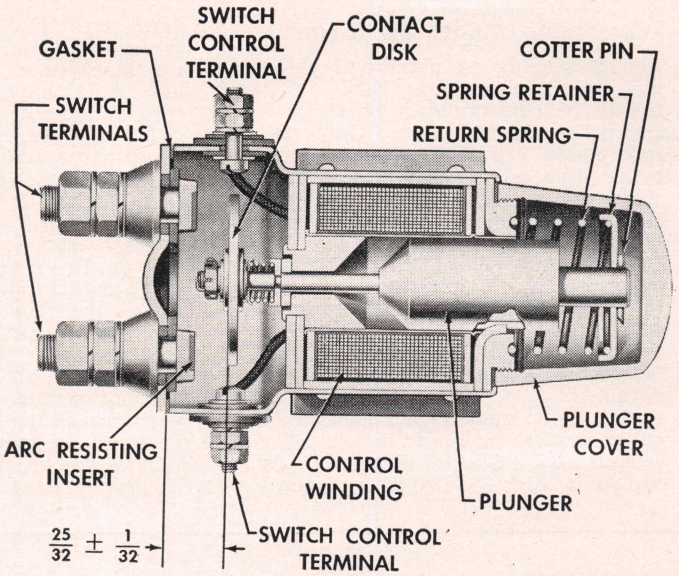

Fig. 3 Sectional view of heavy duty sealed type magnetic switch. To adjust the position of the contact disk, turn the nut on the disk in or out as required to obtain the dimension shown

not. The linkage is not adjustable on the type shown in Fig. 4 but adjustment of the entire assembly is made by moving the switch on the motor frame.

Fig. 4 shows two views of a solenoid switch used on vehicles with 12-volt systems. Like other solenoid switches, this type is energized by the battery through a separate starting switch. Note, however, that the switch includes an additional small terminal and contact finger. This terminal has no functional duty in relation to the switch, but is used to complete a special ignition circuit during the cranking cycle only. When the solenoid is in cranking position, the finger touches the contact disk and provides a direct circuit between the battery and ignition coil.

Fig. 5 is an exploded view of the 12-volt solenoid switch shown in Fig. 4. When reassembling the switch the contact finger should be adjusted to touch the contact disk before the disk makes contact with the main switch terminals. There should be $\frac{1}{16}''$ to $\frac{3}{32}''$ clearance between the contact disk and the main terminals when the finger touches.

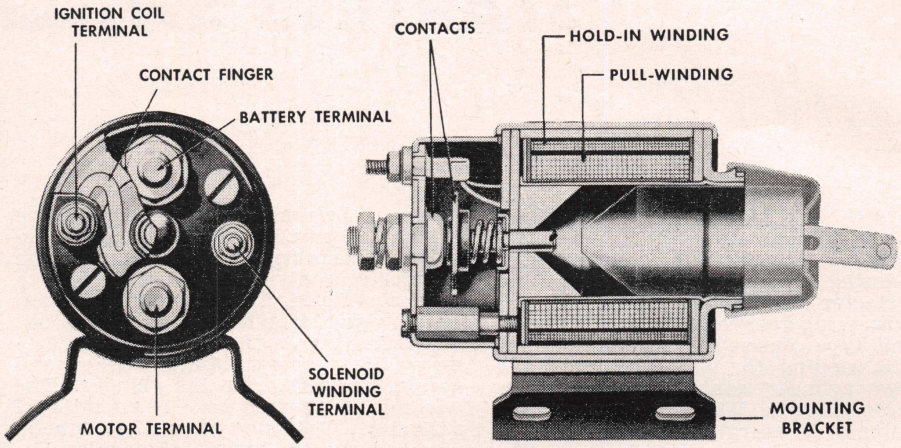

Fig. 4 End and sectional views of solenoid switch. The additional terminal and contact finger are used on 12-volt passenger car applications

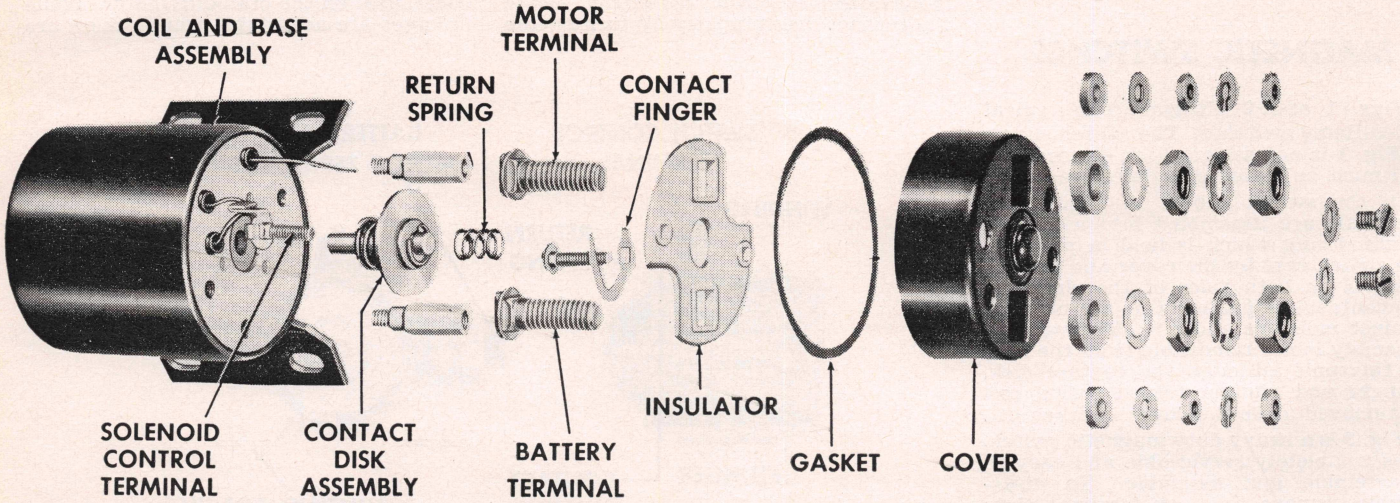

Fig. 5 Exploded view of solenoid switch shown in Fig. 4

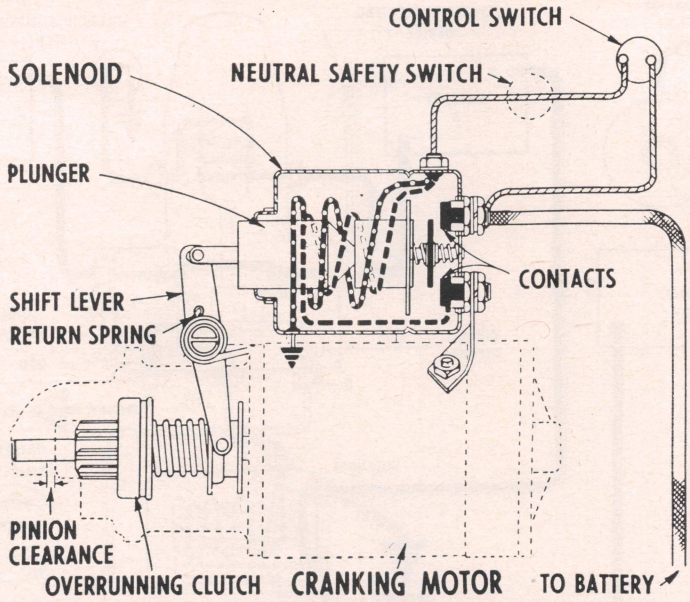

Fig. 6 Wiring circuit of typical solenoid switch

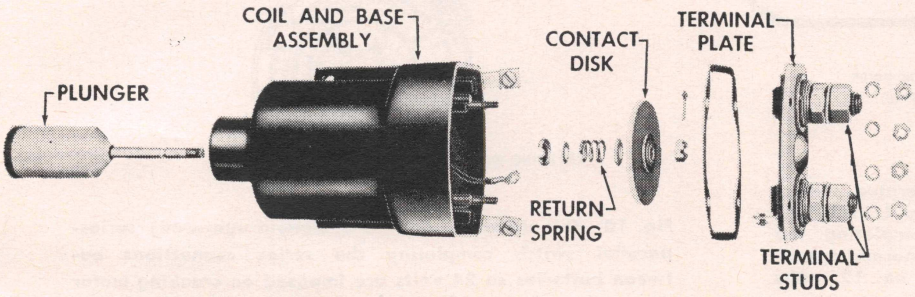

Fig. 7 Exploded view of heavy duty type solenoid used with Dyer drive cranking motor

Fig. 6 is a wiring circuit of a typical solenoid switch. There are two windings in the solenoid: a pull-in winding (shown as dashes) and a hold-in winding (shown dotted). Both windings are energized when the external control switch is closed. They produce a magnetic field which pulls the plunger in so that the drive pinion is shifted into mesh, and the main contacts in the solenoid switch are closed to connect the battery directly to the cranking motor. Closing the main switch contacts shorts out the pull-in winding since this winding is connected across the main contacts. The magnetism produced by the hold-in winding is sufficient to hold the plunger in, and shorting out the pull-in winding reduces drain on the battery. When the control switch is opened, it disconnects the hold-in winding from the battery. When the hold-in winding is disconnected from the battery, the shift lever spring withdraws the plunger from the solenoid, opening the solenoid switch contacts and at the same time withdrawing the drive pinion from mesh. Proper operation of the switch depends on maintaining a definite balance between the magnetic strength of the pull-in and hold-in windings.

This balance is established in the design by the size of the wire and the number of turns specified. *An open circuit in the hold-in winding or attempts to crank with a discharged battery will cause the switch to chatter.*

To disassemble the solenoid, remove nuts, washers and insulators from the switch terminal and battery terminal. Remove cover and take out the contact disk assembly.

When the solenoid has been removed from the starter motor for repair or replacement, the linkage must be adjusted to provide the correct pinion clearance or pinion travel when the solenoid is remounted on the motor. Some solenoids equipped with relays have an adjustable plunger stud but others must be moved on the motor

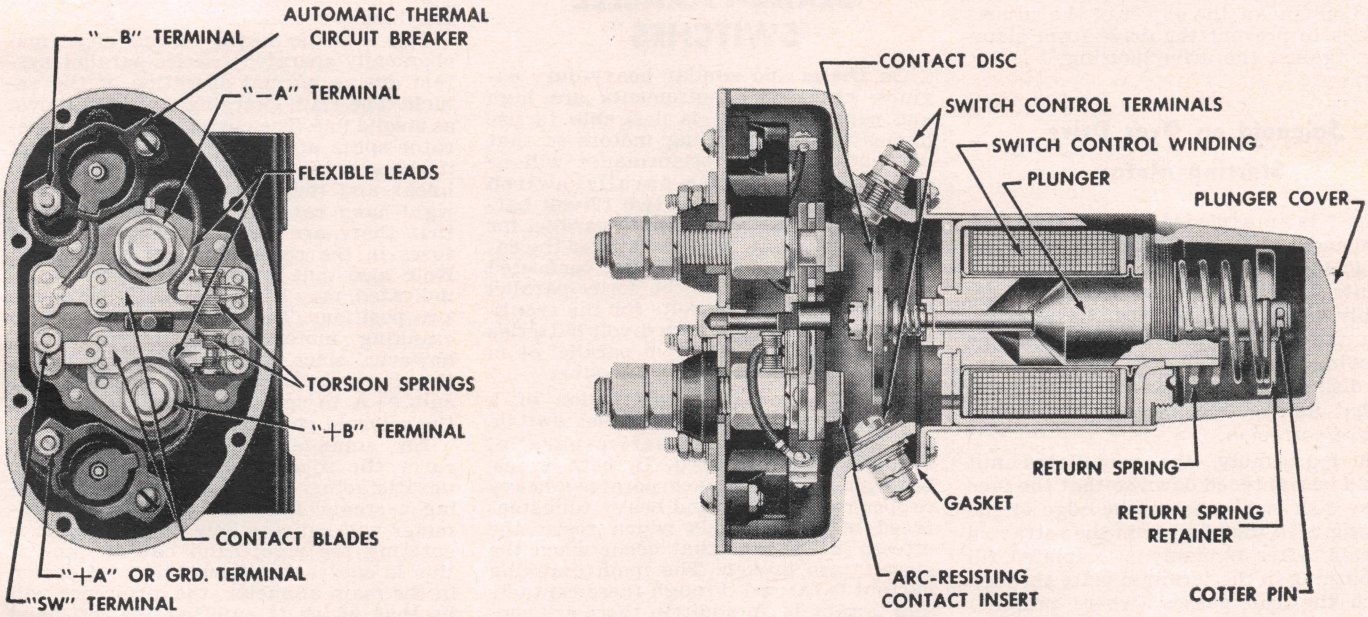

Fig. 8 End and sectional views of a Delco-Remy solenoid-operated series-parallel switch. In the end view the cover has been removed so the terminal plate assembly can be seen

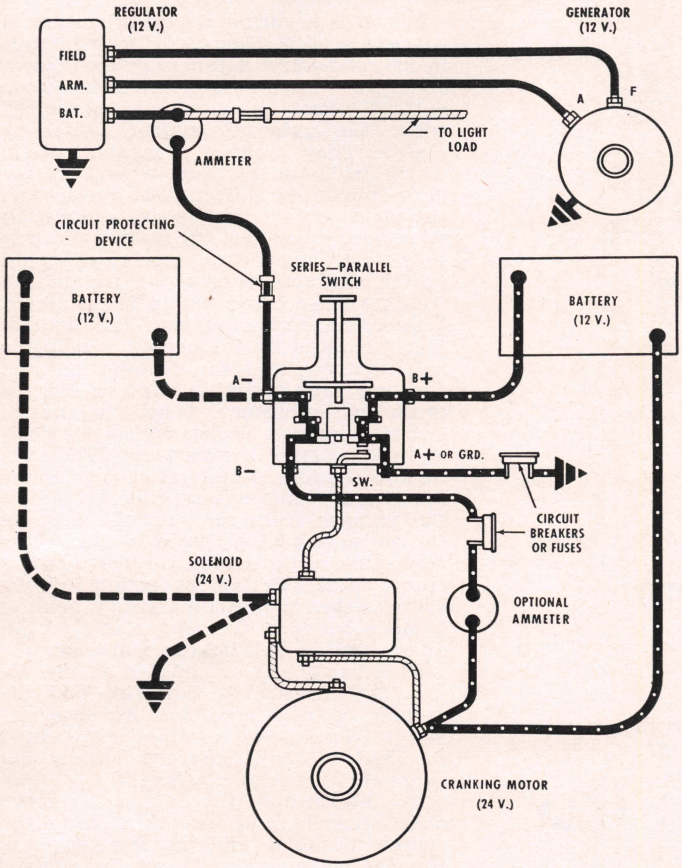

Fig. 9 Wiring diagram of a mechanically-operated series-parallel switch and cranking motor solenoid. This diagram shows the series-parallel switch completing the parallel connections between the batteries for normal operation of the vehicle's electrical equipment on 12 volts

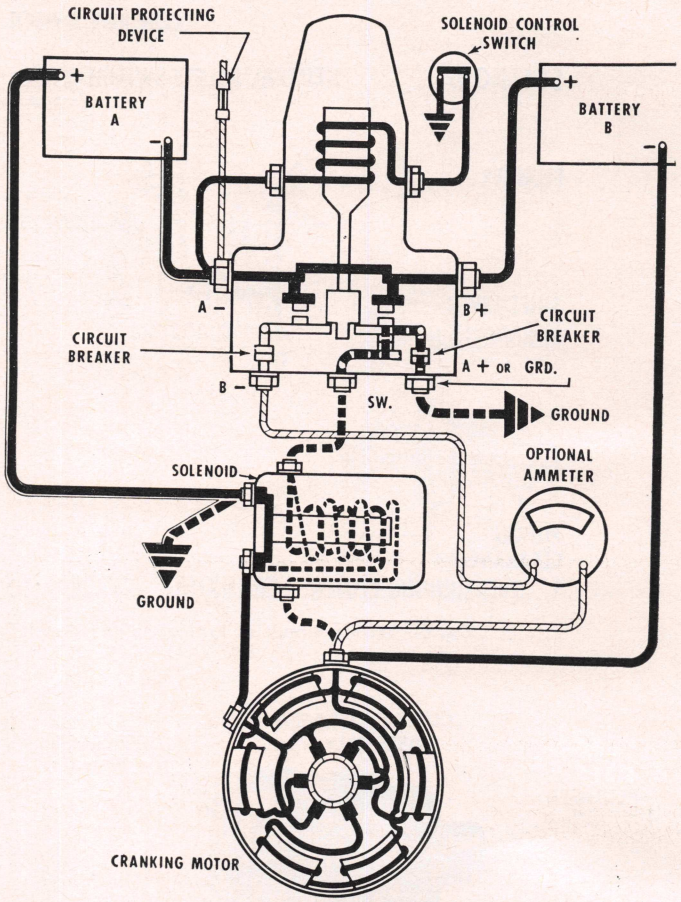

Fig. 10 This diagram shows a (solenoid-operated) series-parallel switch completing the series connections between batteries so 24 volts are imposed on cranking motor

frame to adjust pinion travel. While it is not feasible to tabulate the adjustment specifications for all starters likely to be found on trucks, the object of the adjustment is to prevent the drive from slamming against the drive housing.

Solenoid on Dyer Drive Starting Motor

Fig. 7 is an exploded view of this type of solenoid switch. Disassembly of the switch is made by removing the screws or nuts attaching the terminal plate assembly. The contact disk can be detached from the plunger and rod assembly by removing the castellated nut. The contact disk may sometimes require removal so that its face can be wire-brushed to remove corrosion.

On reassembly, the castellated nut should be tightened down so that the face of the disk is $1\frac{1}{32}''$ below the edge of the housing with the plunger in the retracted position. After assembly is completed, fill the bushing in the terminal plate through which the lead passes (where present) with sealing material to prevent entrance of dirt.

DELCO-REMY SERIES-PARALLEL SWITCHES

On Diesel and similar heavy-duty engines, cranking requirements are high and consequently it is desirable to use higher voltage cranking motors so that adequate cranking performance will be obtained. The series-parallel switch makes it possible to use two 12-volt batteries which are connected in parallel for normal operating conditions after the engine is started, but which are connected in series by means of the series-parallel switch to provide 24 volts for the cranking motor. Likewise, two 6-volt batteries can be connected either in parallel or in series to provide a 6-12 volt system.

Fig. 8 shows the construction of a solenoid-operated series-parallel switch. Mechanically-operated series-parallel switches are also used. In both types, however, the switch incorporates a heavy copper contact disk and heavy tungsten-faced main terminals which resist the effects of the arcs that occur when the circuits are broken. The main cranking current is carried through these contacts and terminals. In addition there are contacts in the terminal plate which completes the parallel connections between the batteries for normal operation and also complete the connections that energize the cranking motor solenoid in the cranking position.

Fig. 9 is the wiring circuit of a (mechanically-operated) series-parallel system during normal operation of the vehicle. The main charging circuit is shown as a solid line. The current from the generator splits at the —A terminal, half of it going to the left-hand battery (dashed lines) and the other half going to the right-hand battery (dotted lines). Note that there are two circuit breakers or fuses in the right-hand battery circuit. Note also that an optional ammeter, as indicated, may be located in either of the two positions. The position in the —B to cranking motor circuit is preferable, however, since this circuit carries only the charging current while the other circuit (+A to "ground") must also carry the solenoid energizing current.

An ammeter sufficiently heavy to carry the solenoid current is generally unsatisfactory for reading small charging currents. In either position, the ammeter will indicate how much current is entering the right-hand battery, and if this is subtracted from the total shown in the main ammeter, the difference will be that which is entering the left-hand battery.

Fig. 10 illustrates the circuits during

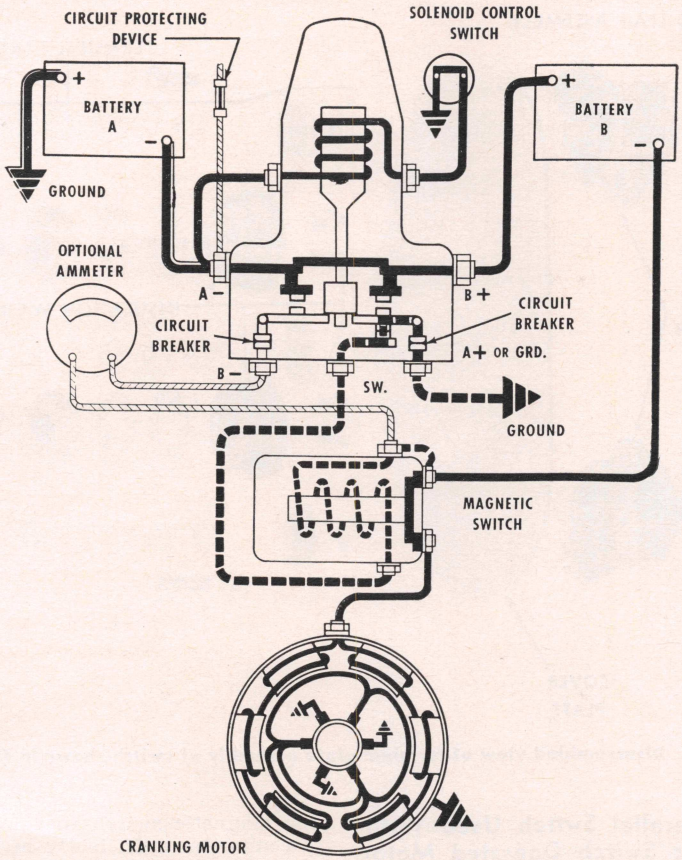

Fig. 11 Same as Fig. 10 except with magnetic type starter switch

the cranking action when the series-parallel switch main contacts are closed (note that this diagram shows a solenoid-operated series-parallel switch). The series connections between the two batteries and the cranking motor are shown as a solid line, while the cranking motor solenoid circuit is shown as a dashed line.

As the switch is operated the solenoid plunger (or push rod in a mechanically-operated switch) strikes a small plunger in the contact plate assembly, causing the small contacts to be actuated so that the parallel connections between the two batteries are broken. Then the main contact disk connects the two main switch terminals (−A and +B); and as the small plunger completes its travel it connects the cranking solenoid through ground through the SW terminal (this circuit is shown as a dashed line). Now the cranking motor solenoid operates and closes its contacts to complete the series connections through the cranking motor so that the motor operates.

After cranking has been accomplished and the series-parallel switch is released, the two batteries again become connected in parallel to provide 12-volt operation of the equipment.

In the mechanically-operated switch, Fig. 9, a quick-break mechanism, consisting of a pair of triggers and a cam, causes the contact disk to be snapped away from the stationary contacts very quickly so that there is a very small amount of arcing.

Fig. 11 illustrates a solenoid-operated series-parallel switch used in conjunction with a cranking motor magnetic type switch. Figs. 12 and 13 are exploded views of the mechanical switch, while Fig. 14 is an exploded view of the solenoid-operated switch. These pictures can be used as guides whenever disassembly is required.

DELCO-REMY SPLASHPROOF SERIES-PARALLEL & COMBINED SERIES-PARALLEL & MAGNETIC SWITCHES

Fig. 15 illustrates a low weight series-parallel switch and Fig. 16 pictures the combined series-parallel and magnetic switch of the same type construction. The switch shown in Fig. 15 can be used with either a solenoid or separate magnetic switch controlled starting motor. The switch shown in Fig. 16 is only used with a magnetic switch controlled starting motor and incorporates the magnetic switch with the series-parallel switch into the same splashproof container.

Series-Parallel Switch Used With Solenoid Operated Motor

Fig. 17 is a schematic wiring circuit of the series-parallel system in connection with the solenoid operated motor during the cranking operation. The sequence

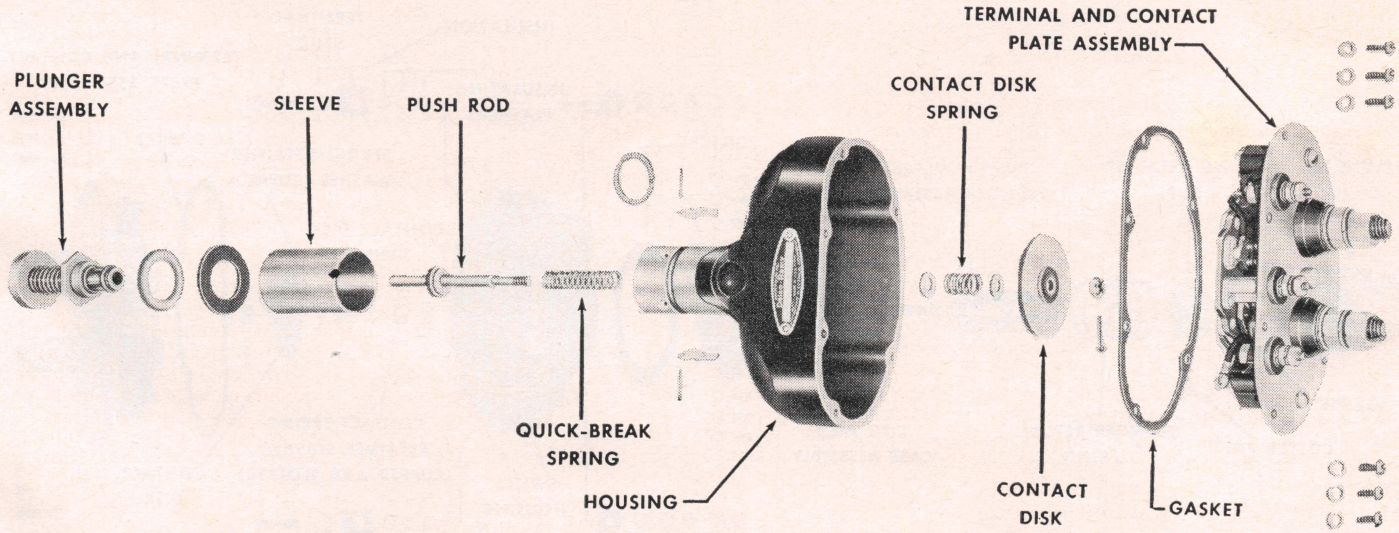

Fig. 12 Disassembled view of mechanically-operated series-parallel switch

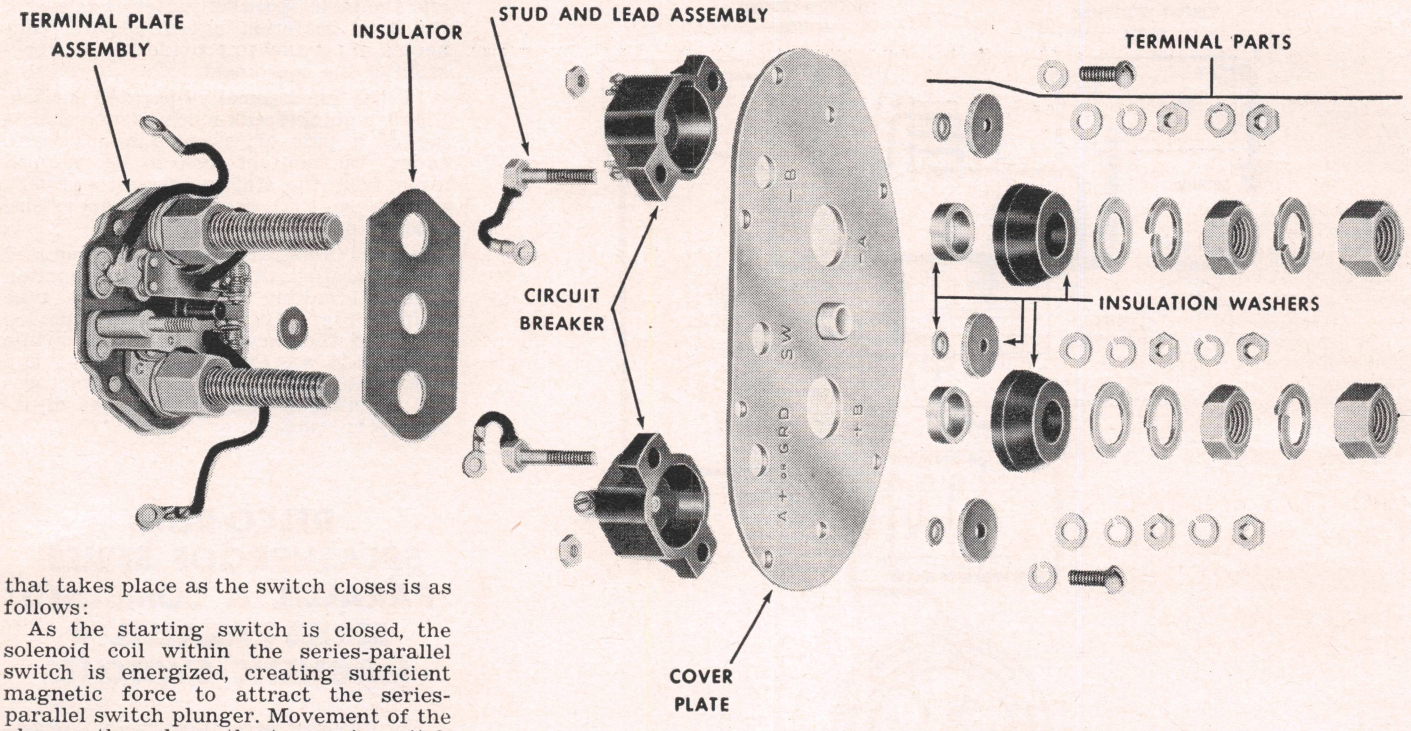

Fig. 13 Disassembled view of terminal plate assembly of switch shown in Fig. 12

that takes place as the switch closes is as follows:

As the starting switch is closed, the solenoid coil within the series-parallel switch is energized, creating sufficient magnetic force to attract the series-parallel switch plunger. Movement of the plunger then closes the two main switch terminals and connects the two batteries in series with the motor. At the same time, the starter solenoid coil circuit is completed by a set of points mechanically closed by the series-parallel switch plunger. This completes the battery-to-starting motor circuit and allows cranking to take place.

After cranking has been accomplished and the starting switch is released, the two batteries again become connected in parallel with the series-parallel switch in its "at rest" position. This allows operation of the rest of the vehicle's electrical equipment at a system voltage of 12 volts. Note that there are two circuit breakers or fuses in the circuit of the "B" battery. These should be used in the location shown. The fuse capacity should be 50% of the generator rated output.

Series-Parallel Switch Used With Magnetic Switch Operated Motor

Fig. 18 is the schematic wiring circuit of this system. The position of the switch is that found in normal operation of the vehicle. The current from the generator divides at the terminal of the series-parallel switch, half of it going to the "A" battery, with the other half of the current going to the "B" battery through the series-parallel switch. Note that an optional ammeter, as indicated, may be located in either of two positions. The preferred location is shown since this circuit carries only the charging current while the other circuit must also carry the magnetic switch energizing current. An ammeter sufficiently heavy to carry the magnetic switch current is generally unsatisfactory for reading small charging currents. In either position, the ammeter will indicate how much current is entering the battery to the right, and if this is subtracted from the total shown on the main ammeter, the difference will be that which is entering the battery to the left.

Combination Series-Parallel Magnetic Switch Used With Bendix Drive Motor

Fig. 19 is a schematic wiring circuit of

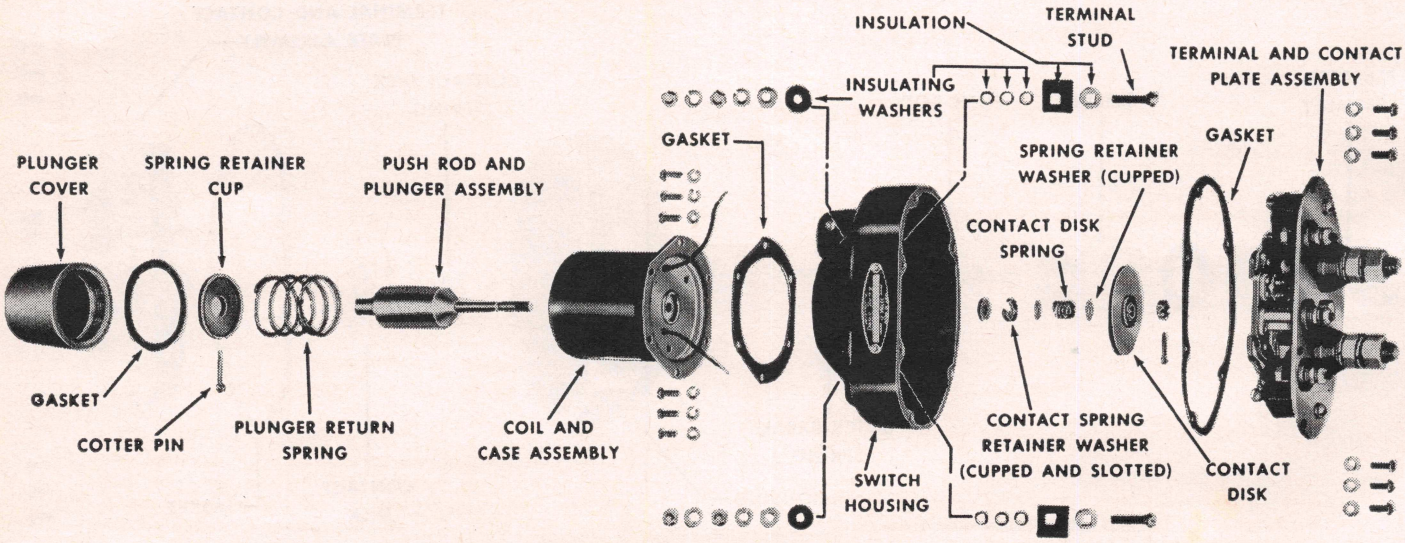

Fig. 14 Disassembled view of solenoid-operated series-parallel switch

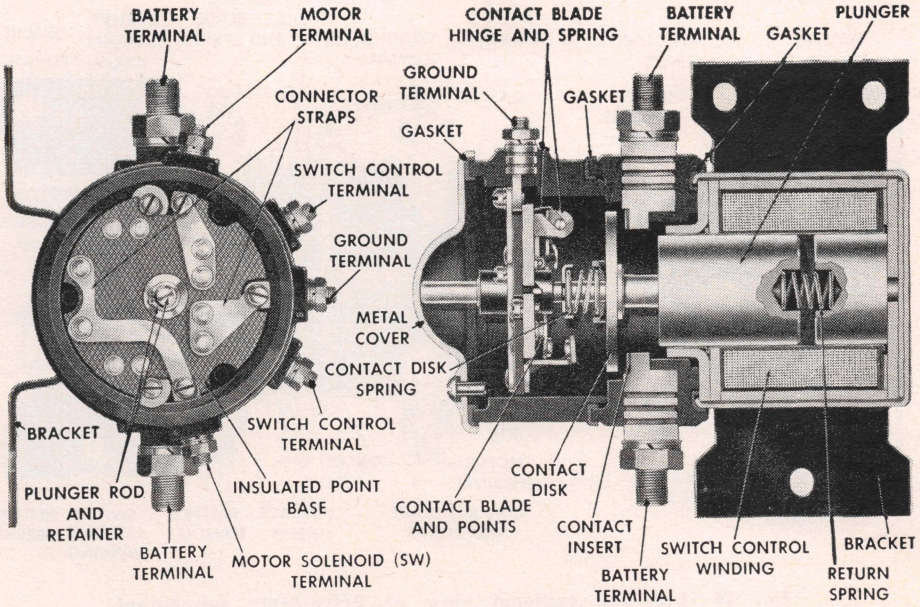

Fig. 15 End and sectional view of Delco-Remy splashproof solenoid operated series-parallel switch

this system. As the starting switch is closed, the solenoid coil within the series-parallel switch is energized, creating sufficient magnetic force to attract the series-parallel switch plunger. The movement of the plunger then joins the two sets of large terminals. This connects both batteries in series with the cranking motor in order that 24 volts can be supplied for starting motor operation.

Fig. 20 shows the same switch after the starting switch is released and the series-parallel switch is in its "at rest" or charging position.

WIRING INSTALLATION FOR SERIES-PARALLEL SWITCHES

Due to the high voltage of the starting circuit and the great amount of power

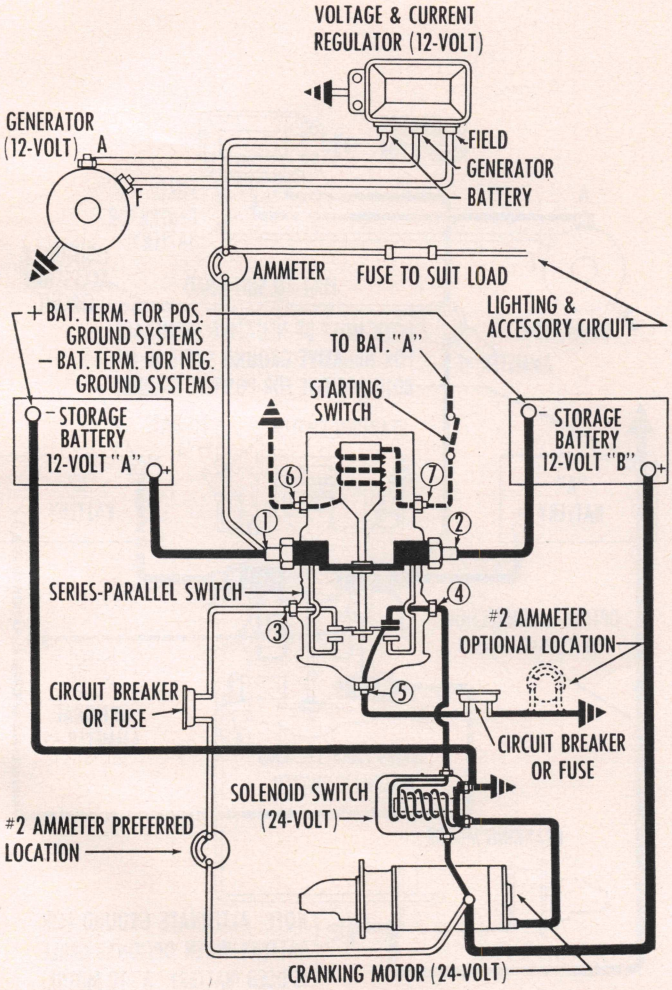

Fig. 17 Circuit diagram of series-parallel system with switch completing series connections between batteries for 24-volt starting motor operation. The motor is operated and controlled by a solenoid

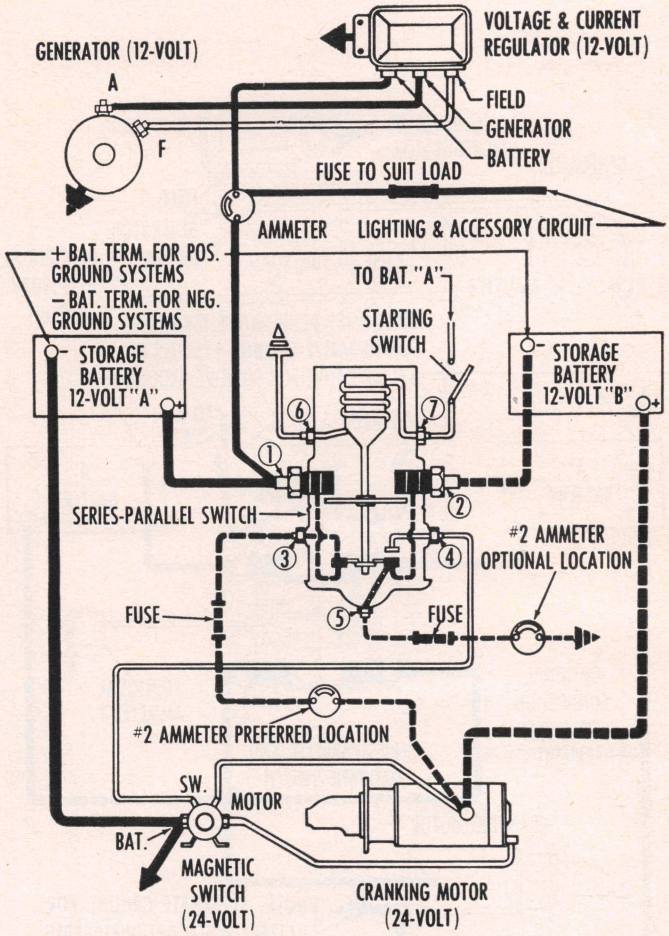

Fig. 18 Circuit diagram of series-parallel system with switch completing parallel connections between batteries for normal operation of vehicle electrical equipment at 12 volts. The starting motor is operated and controlled by a separately mounted magnetic switch

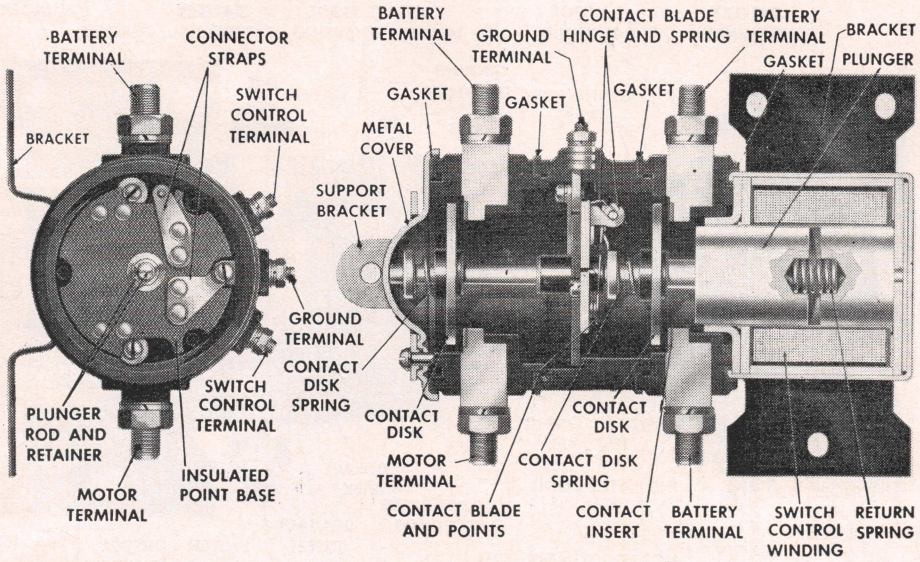

Fig. 16 End and sectional view of Delco-Remy splashproof solenoid operated combined series-parallel and magnetic switch

available from the two batteries, it is essential that every precaution be taken to avoid short circuits or grounds. All wires should be of sufficient size to carry the electrical load to which they are subjected without overheating. Stranded wire and cable should be used throughout to reduce the possibility of breakage due to vibration. All connections should be clean and tight and all terminal clips should be soldered to wires or cables.

Only rosin flux should be used to solder electrical connections. Acid flux should never be used. All wires should be adequately insulated and supported at enough points to prevent movement and consequent chafing through the insulation. It is desirable that all terminals and clips, which are ordinarily left exposed, be protected by insulation. Thus, rubber boots, rubber tape or friction tape and shellac should be applied to cover all exposed terminals and clips. This will prevent accidental grounding of an exposed terminal which could cause serious damage to the system.

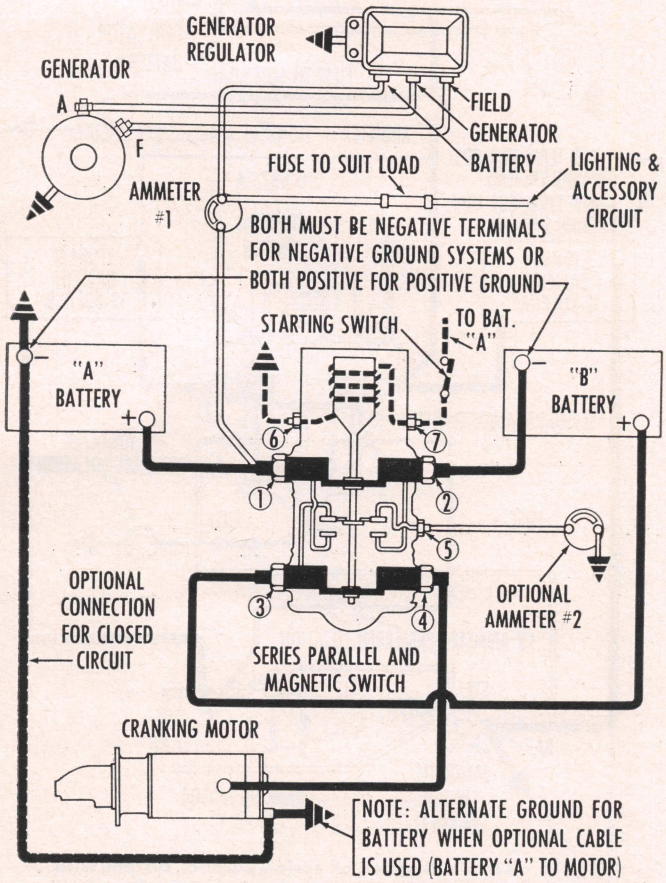

Fig. 19 Circuit diagram of combination series-parallel and magnetic switch completing series connections between batteries for 24-volt starting motor operation

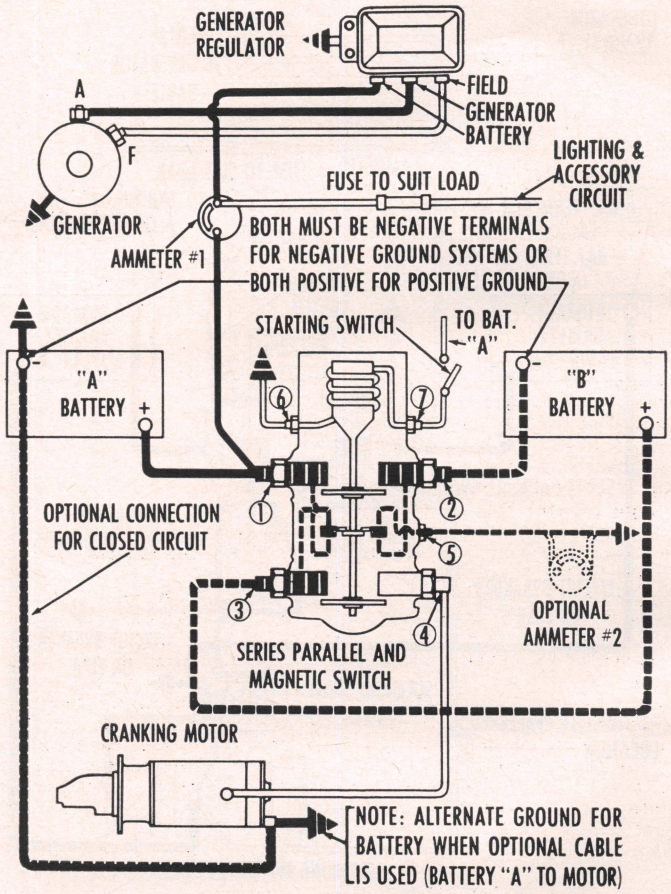

Fig. 20 Circuit diagram of combination series-parallel and magnetic switch completing parallel connections between batteries for normal operation of vehicle electrical equipment at 12 volts

USE OF GLOW PLUGS FOR STARTING

On some applications, glow plugs are used to provide some initial heating so that starting can be facilitated. The heater coil and glow plug circuit should be connected to the +B terminal and a quick-break push button switch installed between the SW terminal of the series-parallel switch and the SW terminal of the cranking motor solenoid. Closing the series-parallel switch supplies current to the heater coil and glow plugs. After the proper heating interval, cranking is then accomplished by closing the quick-break push button switch in the cranking motor-solenoid circuit.

BATTERY CARE

For the best performance of the electrical system in which the series-parallel type switch is used, it is recommended that the "A" and "B" batteries be of the same capacity, size, age and manufacture. This will assure both batteries of receiving approximately equal charging rates and the danger of overcharging one battery and undercharging the other will be reduced.

Since the electrical loads on most vehicles are tapped off of one battery, it is recommended that periodically the two batteries should be switched in position. This will lessen the possibility of one battery becoming cycled with resultant positive plate shed which can cause unequal battery capacities.

DASH GAUGES

KING-SEELEY CONSTANT VOLTAGE DASH GAUGES

First introduced on some 1957 vehicles, the constant voltage system incorporates a voltage regulator as well as "senders" that are different from those used in previous systems, Fig. 1A. The new system can easily be tested with a voltmeter having a range up to 15 volts and with a fuel-gauge sending unit.

Responsible for the greater ease of testing is the greater simplicity of the new system. Essentially, it consists, in addition to the new-type senders, of a voltage regulator which changes the variable input from the car battery and charging system to a constant output of the gauges. When the ignition is turned on, the regulator current flows through a heating coil which encircles a bimetallic arm. Resulting heat causes the arm to bend and separate the contacts. Repeated making and breaking of the circuit supplies current at a pulsating 5 volt pressure to the gauges.

Senders for the fuel and oil-pressure gauges are rheostats. In the fuel-tank unit, the sliding contact brings full resistance into the circuit when the tank is empty and only a small amount of current flows through the dash-gauge heating coil. The bimetallic arm deflects the gauge pointer to "Empty." As the tank fills, the float arm moves the contact, decreasing resistance. As more current flows to the dash unit heating coil the pointer deflects toward "Full."

In the oil line, a contact, attached to the diaphragm, moves as pressure increases or decreases, varying the resistance in the circuit, and deflecting the gauge needle accordingly.

The sender for the temperature gauge contains an element in which resistance to the flow of electrical current increases with cold. As the engine warms up, resistance falls and the fuller flow of current to the gauge moves the pointer toward "Hot."

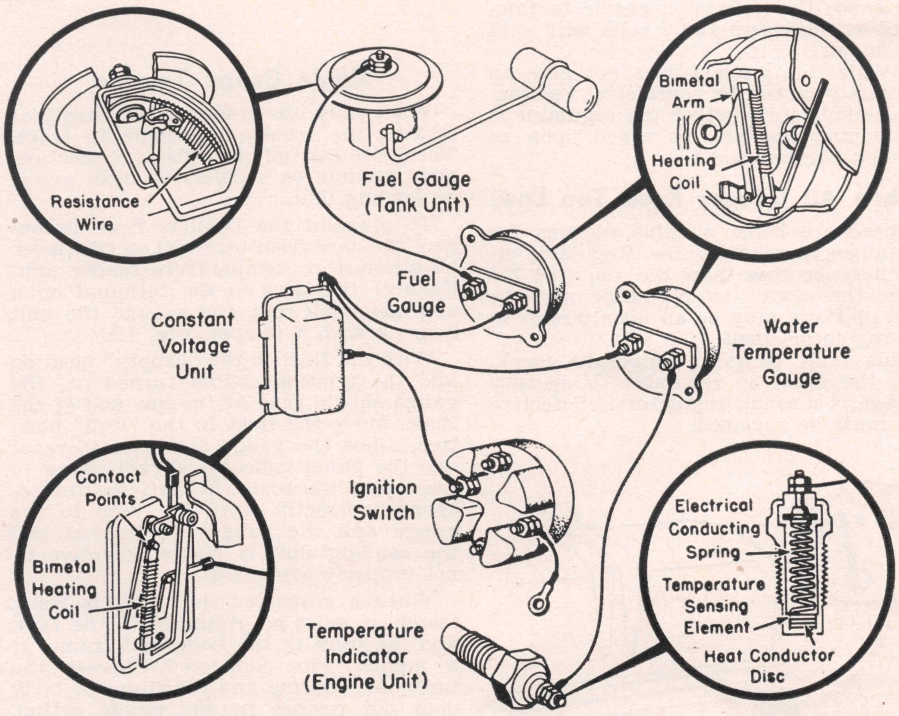

Fig. 1A King-Seeley constant-voltage system with units enlarged to show their construction

Trouble Shooting

When trouble develops, you can quickly put your finger on the cause through the use of the voltmeter and the fuel-gauge sending unit already mentioned. The latter should have a short ground lead and clip.

A word of caution about grounding: When testing or making replacement of a unit under the dash, be careful not to ground the wires to the gauges, sending units or regulator. A full flow of current through the regulator to ground will burn out this unit.

All the trouble that can develop in a constant-voltage gauge system falls into the following four distinct classes: 1. All gauges read too high; 2. All gauges read at high limit; 3. All gauges read too low; 4. One gauge is inaccurate or erratic.

When All Gauges Read Too High

When all gauges read too high, you will usually find that the voltage regulator is not properly grounded. To be sure, make a quick check with a jumper connected from the regulator case to the sheet metal of the instrument panel. Clean the mounting area to provide a good ground.

When All Gauges Read At High Limit

When all gauges read at the maximum of the needle travel, look for the trouble in stuck points or an open winding in the heating coil in the voltage regulator.

In checking for this trouble, connect the voltmeter to the regulator output terminal and to ground. This will show the output voltage of the regulator. If output shows a steady unregulated voltage equal to the battery voltage, the regulator is defective and should be replaced. A normally operating regulator

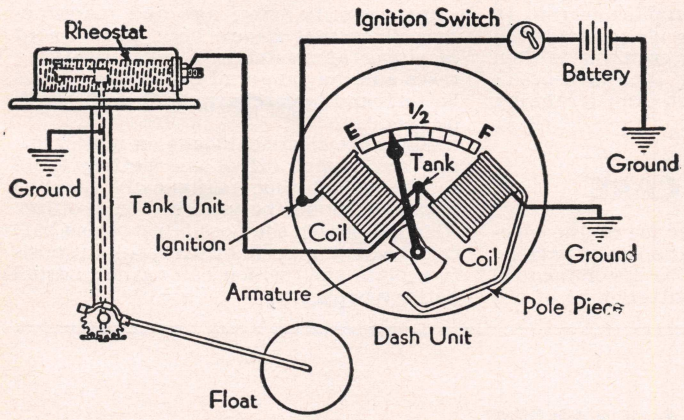

Fig. 1 AC electric fuel gauge

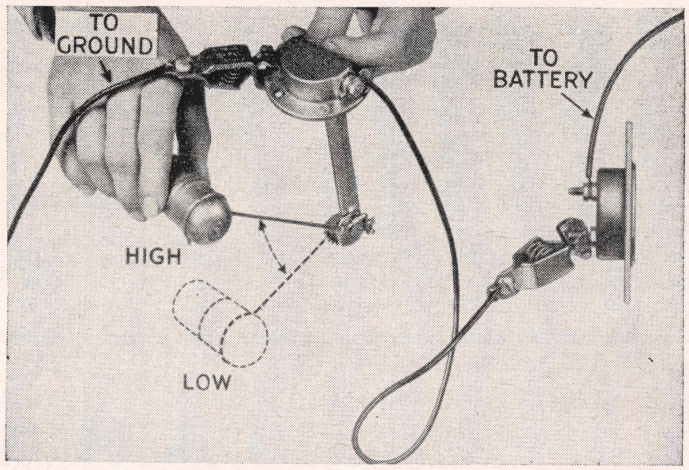

Fig. 2 Showing use of spare tank unit to check operation of dash unit

will cause the voltmeter needle to fluctuate between zero and 7 volts with a 12 volt input.

(While this method does not give an absolutely accurate voltmeter reading, it does indicate whether the regulator is functioning and can be relied upon as a quick service test.)

When All Gauges Read Too Low

There are three possible reasons for all gauges to read too low. Regulator input may be less than the required 5.5 volts, the circuit to regulator may be open or there may be an open circuit in the regulator itself.

This fault is quite simple to check. Test the input to regulator. If battery voltage is normal, regulator is defective and must be replaced.

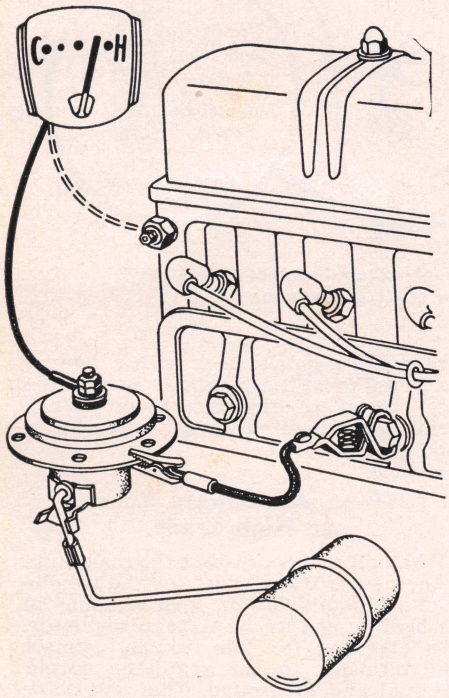

Fig. 1B When tank is used to test temperature gauge, raising float through arc should swing needle of dash unit over toward "hot" side

Single Gauge Trouble

When only one gauge is inaccurate or erratic, the trouble is simple to trace. The cause can only be a loose connection, poor ground, or a defective dash gauge or sending unit.

To pinpoint the trouble, first disconnect the wire from terminal on fuel-level, oil-pressure or temperature sender unit. Connect the wire to the terminal on a new gas tank unit and ground the unit housing with a jumper, Fig. 1B.

With the float in the "Empty" position and the ignition switch turned on, the gauge should read at the low end of the scale. Move the float to the "Full" position, allow the gauge a minute to react and the panel indicator should swing to the top of the scale. If the indicator responds correctly, both the wire to the gauge and the gauge are normal and the sending unit is either defective or not properly grounded.

When a suspected tank unit is being tested, it must be grounded to the tank and the tank to the body and frame. If a jumper wire connected between the tank unit housing and the frame or body does not restore normal gauge action, replace the defective tank unit.

If the indicator does not respond accurately, disconnect the lead wire to the indicator and make a direct connection of the new tank unit to the indicator. If the "Empty" and "Full" tests now give normal indicator action, repair or replace the lead wire. If the indicator does not register accurately, replace it.

AC FUEL GAUGE

The gauge consists of two units: (1) The indicating or dash unit which is mounted on the instrument panel; (2) the tank unit which is installed in the fuel tank. These two units are connected by a single wire and each unit is grounded in its respective location.

Fig. 1 shows a wiring diagram of the gauge. The dash unit consists of two coils spaced 90 degrees apart with an armature and integral pointer at the intersection of the coil axis. An inertia dampener is provided on the armature to prevent vibration on rough roads.

The tank unit consists of a housing enclosing a rheostat or resistance unit with a brush which contacts the resistance unit. This contacting brush is actuated by the float arm—movement of which is controlled by the height of the fuel in the tank. Variations in resistance (height of fuel) change the value of the indicating unit coils so that the pointer indicates fuel availability. A calibrated friction brake is included in the tank unit to prevent wave motion of the fuel in the tank from oscillating the pointer on the indicating unit.

Gauge Service

If the gauge does not give an accurate indication of the amount of fuel in the tank, check to locate the trouble as follows:

First, make a tester using an extra AC tank unit known to be in good condition. Then attach a spring terminal clip to a five-foot length of colored wire. Connect the other end of this wire to the binding post of the tank unit. Next, attach two spring terminal clips to a similar piece of black insulated wire and the tester is ready for use.

Testing Dash Unit

1. Turn off the ignition switch.
2. Disconnect one of the battery cables.
3. Disconnect the wire which leads to the tank unit.
4. Using the spring clip, connect your colored tester wire to the binding post from which the wire was removed.
5. Connect the black wire to the flange of the tester and to any convenient ground—such as the unpainted part of the instrument panel.
6. Turn on the ignition switch.
7. Connect the battery cable. Move the arm of the tester back and forth slowly, Fig. 2. If the dash unit is okay, the pointer will move from

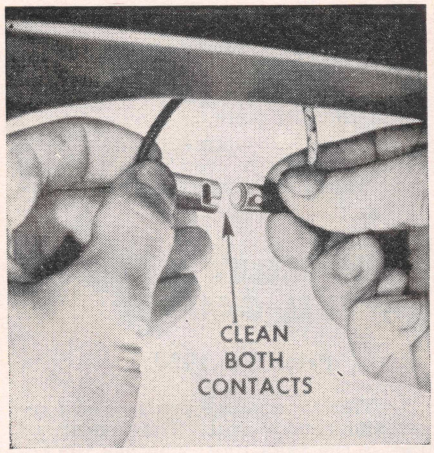

Fig. 3 AC fuel gauge connection

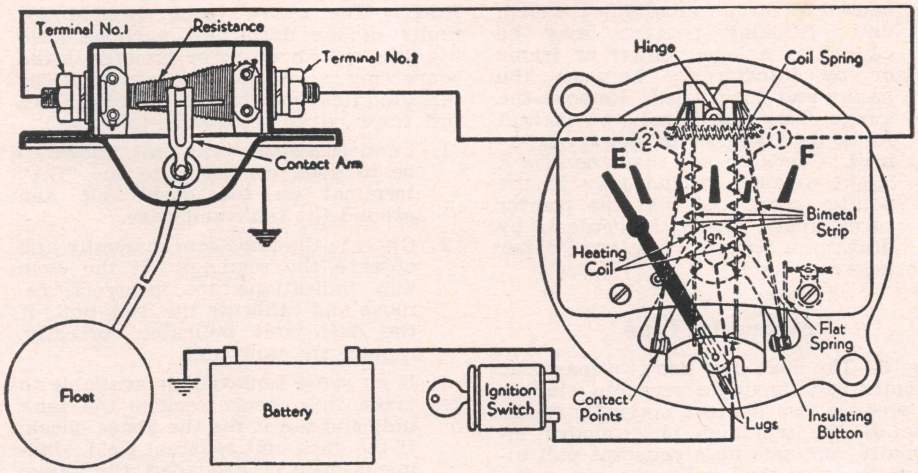

Fig. 4 AUTO-LITE thermostatic fuel gauge

"Empty" to "Full" freely. If the pointer doesn't move, or only moves part way, the dash unit is defective and a new AC dash unit must be installed.

Test Wiring from Dash to Tank

1. Turn off ignition switch. Disconnect battery and reconnect wire to dash unit.
2. Follow wire from tank unit to "bayonet connection" or the terminal junction block. Disconnect the wire at this point and clean wire contacts by scraping with a knife or sandpaper, Fig. 3.
3. Attach the colored wire to the end of the wire which runs to the instrument panel. Attach the black tester wire to the car frame for a ground.
4. Connect the battery cable and turn on the ignition switch. Move the arm of the tester back and forth. If the wiring is okay, the pointer on the dash unit will move from "Empty" to "Full" freely. If the pointer doesn't move or only moves part way, the trouble is in the wire from the dash unit to the tank.
5. If the pointer does move correctly, the trouble is in the tank unit or the wire which runs from it to the "bayonet connection", Fig. 3, or terminal junction block. If the connections are all clean and tight, and there are no breaks or chafes in the wire from the bayonet connection to the tank, then a new AC tank unit must be installed.

AUTO-LITE FUEL GAUGES

Thermostatic Type

Figs. 4 and 5—With this type gauge two wires are used to connect the dash unit with the tank unit. The dash unit contains two thermostatic strips heated by resistance wires wound around the strips. The two bimetal strips that are not heated take care of variations in temperature.

The two terminals of the dash unit marked "1" and "2" are connected by separate wires to the tank unit terminals marked "1" and "2".

Movement of the float arm in the tank, due to changes in fuel level, moves a contact arm across a resistance winding in the tank unit. This varies the resistance in the windings of the dash unit, raising and lowering the temperature of the bimetal strips. The strips bend, depending upon the amount of heat they receive, moving the gauge pointer.

Due to the heating of the bimetal strips, the thermostatic type fuel gauge action is slow, and the pointer does not react to sudden changes in fuel level due to sloshing of the gasoline in the tank.

SERVICE—The gauge can be tested by using a spare tank unit known to be in good condition. The procedure is as follows:

1. Disconnect wires from terminals marked "1" and "2" on the tank unit.
2. Connect the disconnected wires to the corresponding terminals of the spare tank unit.
3. Then connect a third wire to the frame of the spare tank unit and to any good grounding point on the car.
4. Turn on ignition switch. Allow about one minute for the dash unit to heat, then operate the float arm of the spare tank unit (see Fig. 2).
5. If dash unit does not indicate correctly, install a new Auto-Lite dash unit. If dash unit works properly, the fault is in either the wiring or the tank unit.
6. If the dash unit is okay, reconnect the wires to the terminals and disconnect the wires from the tank unit. Ground the No. 1 wire and allow approximately one minute for the dash unit to reach its indication —which should be above the "Full" position. Then ground both wires and the gauge should return slowly to the "½ Full" position. If the indications are not as described it indicates a grounded or open-circuited wire which should be repaired.
7. By elimination, if the gauge operates correctly in the above tests, the tank unit can be regarded as the cause of the original inoperation.
8. When reconnecting the leads to the dash or tank units, be careful not to interchange them as this would reverse the indications.
9. Erratic or incorrect indications may be caused by a loose connection or ground in the wiring or terminals. A fluctuating pointer is usually

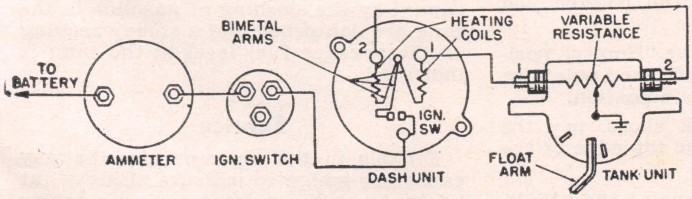

Fig. 5 AUTO-LITE thermostatic fuel gauge wiring diagram

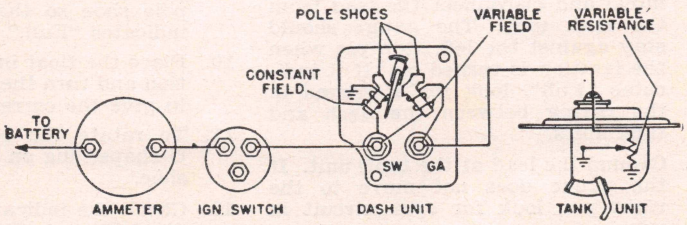

Fig. 6 AUTO-LITE magnetic fuel gauge wiring diagram

caused by dirty contacts in the dash unit. Sticking pointers may be caused by a bent pointer or frame or by interference between the gauge and dash panel. Remove the gauge from the panel and inspect for a bent pointer or pointer bearings. Check to see that there is a slight amount of end play in the pointer shaft and that the pointer turns freely. Clean the contacts by drawing a strip of clean bond paper between them.

Magnetic Type

Fig. 6—The dash unit has two magnetic circuits, each having a separate winding to produce two distinct magnetic fields. One of the windings is grounded internally, and sets up a constant pull toward the "Empty" indication when the ignition switch is turned on. The other winding, called the variable field winding, is grounded through the tank unit. This winding pulls the pointer across the gauge dial to indicate the amount of fuel in the tank.

The tank unit contains a resistor and a contact arm which moves as the float moves. The tank unit case is grounded to complete the fuel gauge circuit.

The magnetic field around the variable winding changes with a change in the amount of the fuel in the tank. As the float in the tank moves from "Full" to "Empty", the strength of the magnetic field is gradually reduced. When the float moves from "Empty" to "Full," the strength of the magnetic field is increased.

The pointer is mounted on a magnetic vane which is attracted by the two lower magnetic poles and assumes a position between them depending upon the combined magnetic field. A counterweight is mounted on the pointer to bring the reading back to "Empty" whenever the ignition is turned off.

SERVICE—If the gauge does not give an accurate indication of the amount of fuel in the tank, check to locate the trouble as follows:

1. Disconnect the lead from the "GA" terminal on the back of the dash unit.
2. Turn on the ignition and the pointer should stay against left stop pin ("Empty").
3. Ground the "GA" terminal and the pointer should move to the right stop pin ("Full").
4. Check the wiring from the ignition switch to the "SW" terminal and replace the dash unit if it does not act as described.
5. Reconnect the lead to the "GA" terminal and disconnect the lead from the tank unit. The gauge should stay against the left stop pin when the ignition is turned on. If it indicates "Full", look for a ground in the wiring between the dash and tank units.
6. Ground the lead at the tank unit. If the gauge does not move to the right pin, look for open circuit in wire.

NOTE—The above tests checked for faults in the dash unit variable field winding and for opens or grounds in the connecting wires, but did not check the constant field winding or tank unit. To test these parts, proceed as follows:

1. Connect a spare tank unit, known to be in good condition, to the "GA" terminal on the dash unit and ground the tank unit case.
2. Operate the float arm manually and observe the readings. If the dash unit indications are incorrect, remove and calibrate the dash unit; if the dash unit indicates correctly, replace the tank unit.
3. If no spare tank unit is available to make this check, remove the tank unit and use it for the above check. If the dash unit constant field winding is open or grounded, the gauge will read "Full" over a large part of the float arm movement. If the tank unit is faulty, the gauge will be erratic or will not operate at all.
4. If the operation of the gauge is erratic it may indicate that there is interference with the pointer movement. Remove the dash unit and inspect the pointer and armature assembly. Straighten the pointer if it has been bent and rubs against the dial and frame. Check to make sure there is a slight amount of end play in the pointer shaft and that the bearing plates have not been bent out of alignment.
5. Make sure bearings are clean. If the adjustable bearing is loose, or after adjusting the end play, apply a drop of air drying varnish to prevent the bearing from turning. Later gauges do not have this adjustable bearing screw; the shaft being held in position between the bearing plates, the upper one being loose and held in place by the dial screws. In no case should varnish be applied to this type bearing and adjustment is not necessary.
6. To calibrate the dash gauge, remove it from the panel and mount it in the same position. Check to make sure the pointer turns easily and returns to the left hand stop (empty) from any position. The pointer should return promptly and have a very slight bank against the stop.
7. Connect the "SW" terminal on the dash unit to one battery terminal and ground the dash unit frame to the other battery terminal.
8. Connect the tank unit to the "GA" terminal and connect the tank unit case to the battery ground terminal.
9. Place the float arm in the "Full" position and turn the right hand pole shoe so that the pointer just indicates "Full."
10. Place the float in the "Empty" position and turn the left hand pole shoe to give the correct indication.
11. To rotate the pole shoes, pry the U-shaped lug on the top edge of the shoe.
12. Check the indications at the "Full", "½ full" and "Empty" positions.
13. When calibrating, it may be necessary to spread or reduce the indicator movement. This is done by bending the upper shoe to increase or decrease the air gap between the pole and armature.
14. After all adjustments are completed, apply a drop of air drying varnish to each shoe to prevent slipping.

KING-SEELEY & FORD FUEL GAUGES

Prior To 1957

Fig. 7—This type gauge consists of a receiver and sender unit. The sender, of course, is the tank unit, whereas the receiver is the dash unit.

The sender unit contains a heating coil formed around a bimetal strip, and an external float which varies the height of a grounded spring contact, which in turn increases or decreases the tension of the bimetal strip.

The receiver unit contains a similar heating coil and bimetal strip, linked to a pointer. The receiver unit is series connected to the ignition switch, and therefore, operates only when the ignition switch is turned on.

When the fuel tank is empty, the float of the tank unit is at the bottom of its movement and the two contacts are just touching. With the ignition switch turned on, current flows through the circuit and heat is generated in the heating coil, causing the bimetal strip to bend. Bending of the bimetal opens the contacts and the circuit is broken. The heating coil and bimetal then cools and the spring returns to its former position where contact is again made.

Since the heating coils of the two units are connected in series, a similar slight bending of the bimetal strip in the dash unit takes place, which is just sufficient to pull the pointer to the "Empty" position.

When the fuel tank is filled, the action of the float and eccentric shaft (some units have cams) raises the grounded contact against the insulated bimetal contact, bending the bimetal strip in the dash unit.

With the bimetal strip under tension, a greater amount of current is required to bend it sufficiently to break contact. A similar increased bending of the bimetal strip in the dash unit occurs and this action pulls the needle over the "Full" position on the dial. The cycle of opening and closing of the contacts is continuously repeated.

Because the bimetal strips heat and cool slowly, sudden changes of fuel level caused by the sloshing of gasoline in the tank are dampened and a steady reading of the average fuel level in the tank is indicated.

Service

Trouble in the units or circuits may cause the gauge to indicate "Empty" at all times or the pointer may constantly rest beyond the "Full" mark.

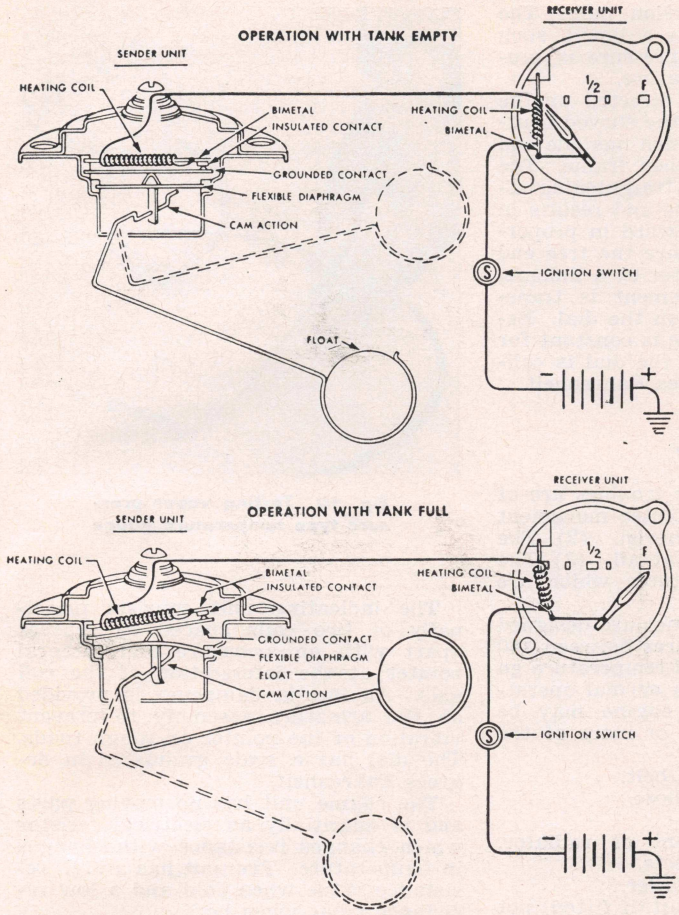

Fig. 7 FORD and KING-SEELEY fuel gauges (prior to 1957)

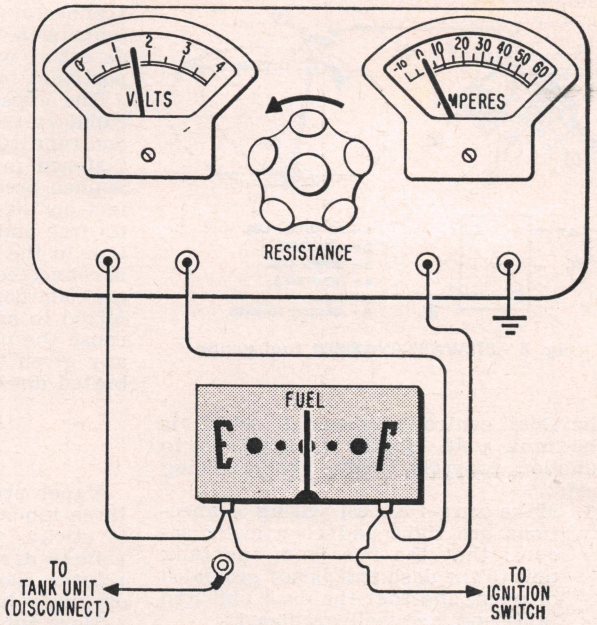

Fig. 7A Testing dash unit fuel gauge with volt-ammeter test set

Gauge Does Not Indicate

When the dash unit does not indicate the fuel level with ignition switch turned on, check the dash unit and wire to the tank unit as follows:

1. With ignition switch turned off, connect a jumper wire from the tank unit terminal to a convenient ground.
2. Turn the ignition switch on momentarily. Then if the dash unit gives an indication, the tank unit is defective and must be replaced.
3. If the dash does not show any indication after completing step 2, ground the tank-to-dash wire at the dash unit terminal.
4. Turn ignition on momentarily. If the dash unit now indicates, then the wire to the tank unit is defective and must be repaired or replaced. However, if the dash unit fails to indicate, then the dash unit is defective.

CAUTION—In making tests, be sure to turn off the ignition switch before the pointer reaches the full end of the scale, otherwise damage to the dash unit will result. A defective tank unit or wiring may have damaged the dash unit. After installing a new dash unit, observe its action after turning on the ignition switch momentarily. If the pointer moves beyond the "Full" mark, then the tank unit or wiring is defective and must be replaced.

In rare cases, a false indication of fuel level would be obtained if a leak developed in the tank unit float. If this condition is found, replace the complete tank unit.

Gauge Indicates Beyond "Full" Mark

When this condition occurs, regardless of the quantity of fuel in the tank, make the following tests to determine the source of the trouble. Before each test, be sure to turn on the ignition switch momentarily to energize the units.

1. If the tank unit is equipped with a radio condenser, disconnect the condenser. Then if the dash unit indicates correctly, the condenser is shorted and a new one should be installed.
2. The next step is to check the wiring between the gauges. Do this by disconnecting the existing wire and substitute a jumper wire between the gauges. If the dash unit now checks OK, it indicates that the wiring is defective.
3. If the wiring proved not to be the cause of the trouble, use a spare tank unit and operate the float by hand, first being sure to ground the tank unit housing. Now if the dash unit indicates correctly, the tank unit was the source of the trouble.
4. If the dash unit still fails to function properly after making the above tests, replace it with a new one.

Using Volt-Ammeter Test Set

If a volt-ammeter test set is available, perhaps it is quicker to test the dash gauge first.

1. Disconnect tank unit wire at dash gauge.
2. With ignition switch *off,* connect volt-ammeter test set and dash gauge as shown in Fig. 7A.
3. Turn rheostat knob to maximum resistance.
4. Turn ignition switch on.
5. Decrease resistance until voltmeter reads 1.5 volts. If the dash gauge is functioning properly, the fuel gauge will indicate about ½. If it does not, the gauge is defective.
6. If the dash gauge indicates properly according to the above test, then check out the radio condenser and dash-to-tank unit wiring as directed above. If these check out all right, obviously the tank unit is defective.

STEWART-WARNER FUEL GAUGE

Fig. 8.—This type gauge consists of an ammeter and rheostat. The ammeter, which is calibrated in gallons, is the dash unit and its readings are dependent on the amount of current passed to it by

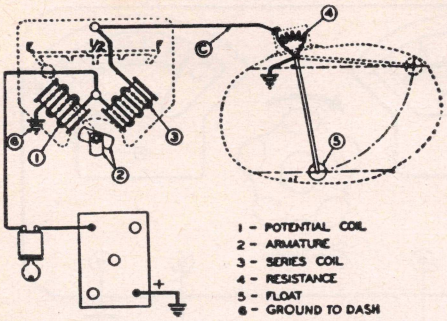

Fig. 8 STEWART-WARNER fuel gauge

the float controlled rheostat—which is the tank unit. If the gauge fails to function properly, make the following tests:

1. Make sure that all wiring connections are tight and electrically secure; that the line from the tank unit to the dash unit is not grounded or open, and that the dash unit and tank unit are well grounded.
2. Disconnect the wire running from the tank to the dash unit at the tank terminal and ground it to the frame while the ignition is on. If the gauge now reads full and drops to empty when the wire is removed from the ground on the frame, the tank unit is faulty. If the dash unit behavior is not as just described when the wire is grounded to the frame and then removed, a defective dash unit is indicated.

If the tank unit is faulty, be sure to have the ignition turned off before removing it from the tank.

AC TEMPERATURE GAUGES

Vapor Pressure Type

This type gauge consists of a metal case, enclosing a dial, a frame and mechanism assembly. Hermetically attached to the frame socket is a capillary tube (connector) and immersion bulb. The immersion bulb contains a liquid, such as ether, whose vapor pressure is proportional to the temperature.

The expanded gas is directed up the capillary tube, and into the curved bourdon tube (C shaped) which has one end fastened to the mechanism frame. The applied pressure has a straightening effect on the bourdon tube and results in its free end moving outward in proportion to the pressure. Since the free end is connected to the pointer by a linkage, the bourdon tube movement is transferred to an indication on the dial. Because the vapor pressure is constant for any given temperature, the dial is calibrated directly in degrees Fahrenheit.

Fig. 9 Removing vapor pressure bulb from engine block

Service

Vapor pressure gauge troubles are of three kinds: (1) The pointer movement is sticky, jumpy or uneven. (2) The pointer does not move at all. (3) The pointer shows temperatures which are obviously incorrect.

Most automotive engines are designed to operate at temperatures between 160 and 180 degrees. Should temperature go consistently higher than normal operating temperatures, the engine may be overheating due to one or more of the following:

1. Broken or loose fan belt.
2. Collapsed radiator hose.
3. Frozen radiator.
4. Obstruction in front of radiator, such as dirt or insects.
5. Thermostat out of order.
6. Radiator pressure cap (if fitted) not operating properly.
7. Poor engine lubrication.
8. Low water level in radiator and cooling system.

After the cooling system is thoroughly checked, test the temperature gauge to make sure that nothing is wrong with it. The procedure is as follows:

1. Drain water from radiator.
2. Loosen plug which holds vapor pressure bulb in engine block.
3. Remove the vapor pressure bulb from the engine, Fig. 9.
4. Place the vapor pressure bulb in a pail of hot water, Fig. 10. Also place a thermometer which reads up to 200 degrees F. or higher, and which is reasonably accurate in the hot water. Leave them in about three minutes.
5. If the temperature gauge is okay, the pointer should register the same temperature as the thermometer.
6. If this test shows that the trouble is in the gauge itself, the entire gauge should be replaced with a new unit.
7. When reinstalling one of these gauges in the engine block, don't use a wrench with too long a handle, and don't turn the bulb down too hard. A water-tight fit is all that is needed.

AC Electric Type

This type gauge, Fig. 11, consists of a dash unit and engine unit. These two units are connected by a single wire and each unit is grounded in its respective location.

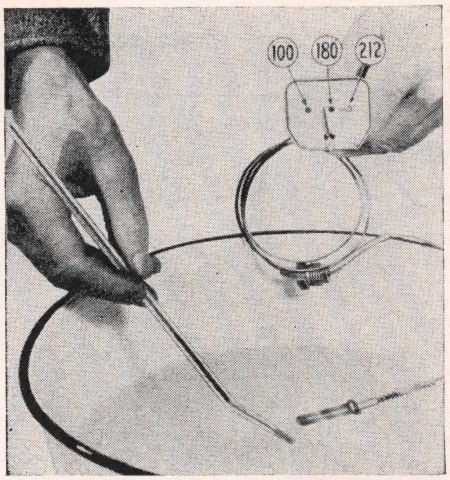

Fig. 10 Testing vapor pressure type temperature gauge

The indicating unit consists principally of two coils spaced 90 degrees apart with an armature and integral pointer at the intersection of the coil axis. An inertia dampener is provided on the armature assembly to prevent vibration of the pointer on rough roads. The dial has a scale graduated in degrees Fahrenheit.

The engine unit has no moving parts and is essentially an electrical resistor which changes resistance with changes in temperature. The unit has a high resistance value when cold and a low resistance value when hot.

The change in engine unit resistance modifies the strength of the indicating unit coils and causes proper indication of the pointer.

SERVICE—Electric temperature gauge troubles are of four kinds: (1) The pointer doesn't move when the ignition switch is turned on. (2) The pointer indicates a high temperature whether the engine is hot or cold. (3) The pointer does not show temperature accurately. (4) The pointer indicates a low temperature whether the engine is hot or cold.

In addition to the above, any of the cooling system troubles listed under va-

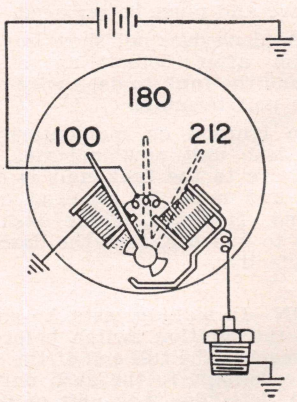

Fig. 11 AC electric temperature gauge wiring diagram

por pressure gauges can also affect the electrical unit.

Incorrect temperature readings are checked as follows:

1. Disconnect wire from binding post on end of engine unit.
2. Turn ignition switch on.
3. Hold end of wire away from all wires or other metal.
4. Check dash unit. The needle should point to the low mark or "100".
5. Touch the bare end of the wire to the engine block.
6. Check dash unit again. The needle should then point to over "212" or the high mark.
7. If the dash unit reads as described in steps 4 and 6, it indicates reasonable performance of the dash unit and the connecting wire. In this event, the engine unit should be checked as described below. But if the dash unit does not indicate properly, then first check the wire. If it is okay, replace the dash unit.
8. To check the engine unit, drain the water from the radiator.
9. Disconnect the wire which is attached to the engine unit, Fig. 12.
10. Loosen the engine unit and lift it out.
11. Reconnect the lead wire to the engine unit. Ground the threaded portion to a convenient point on the car with suitable wire and clamps.
12. Get a pail or other suitable receptacle and fill it with hot water. Also a thermometer having a reading of 200 degrees F. or higher which is known to be reasonably accurate. Place the threaded end of the engine unit part way down into the hot water. Place the thermometer in also. Leave them in the water for about three minutes. Do not let any water get above the threads on the engine unit as to do so may ruin the unit.
13. If the dash unit is okay, the pointer should indicate the same temperature as the thermometer. If the pointer does not indicate correctly, replace the engine unit.

AUTO-LITE TEMPERATURE GAUGES

Vapor Pressure Type

This type gauge operates and is serviced in the same manner as described for AC vapor pressure gauges.

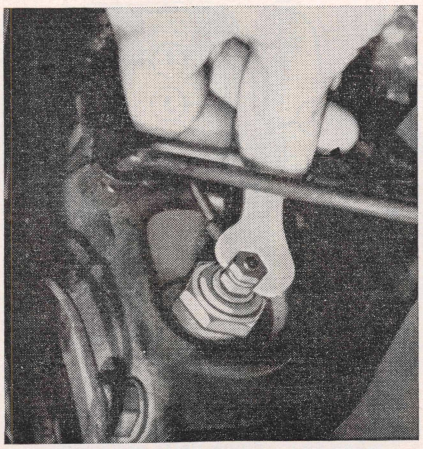

Fig. 12 Disconnecting wire from electric type temperature gauge

Electric Type

This type gauge, Fig. 13, includes two units. The dash unit has three magnetic poles, two of which have windings. One of these windings is connected to the ignition switch and to ground and creates a steady magnetic pull toward the low mark on the scale. The other winding is also connected to the ignition switch but it is grounded by the engine unit. It creates a magnetic pull toward the maximum temperature position, the strength of which is dependent upon the amount of resistance inserted in the circuit by the engine unit.

The engine unit is actuated thermally without moving parts. The resistance unit in the engine unit is made of special metal oxides in the form of a flat disc that changes resistance as its temperature varies. When it is hot, the resistance inserted in the variable field circuit is reduced and the pointer is attracted toward the "Hot" position.

The pointer on the dash unit is mounted on a magnetic vane which is attracted by the two lower magnetic poles and assumes a position between them depending upon the combined magnetic field. A counterweight is mounted on the pointer to bring the reading back to zero whenever the ignition is turned off.

SERVICE—The procedure for testing these gauges is the same as described for the AC electric temperature gauge.

KING-SEELEY & FORD TEMPERATURE GAUGES

Prior To 1957

These units, Fig. 14, consists of a sender unit located in the cylinder head and series connected to the receiver or dash unit. The illustrations show the two engine units, one for each cylinder head on some 1949 and later Ford V8 engines. When only one sender unit is

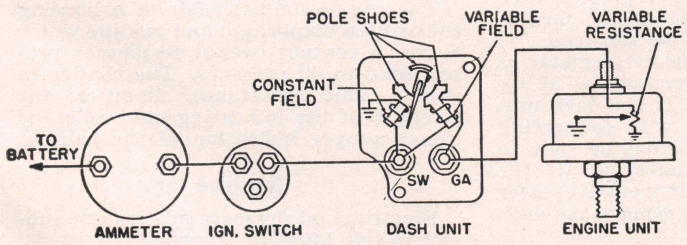

Fig. 13 AUTO-LITE electric temperature gauge wiring diagram

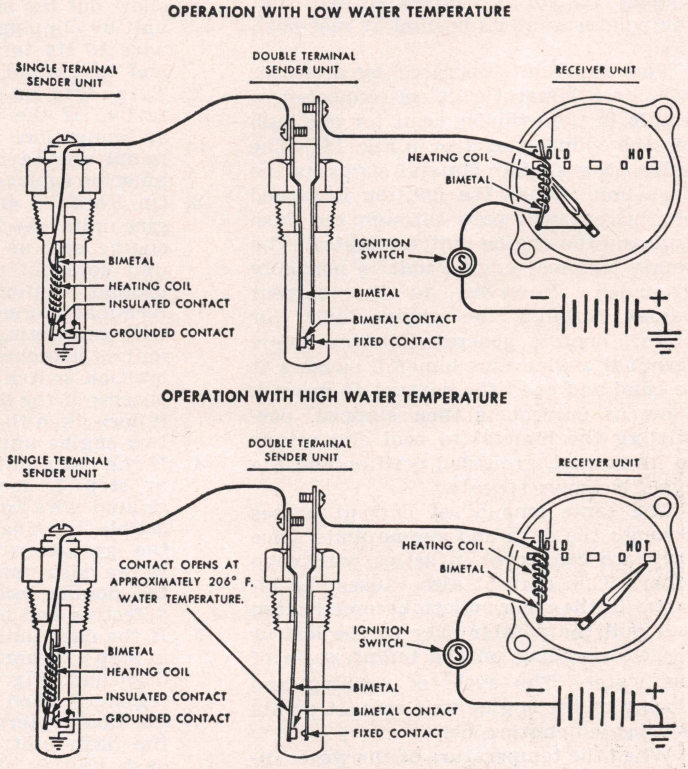

Fig. 14 FORD and KING-SEELEY temperature gauges. The diagrams show the installation on 1949 and later V8 engines in which two engine units are used, one in each cylinder head

used, as in the case with an "In-Line" engine the single terminal sender unit is used.

The single terminal sender unit consists of a heating coil formed around a bimetal strip, insulated from the grounded frame. A grounded contact is attached to the frame in alignment with the bimetal contact.

The double terminal sender unit is similar in outward appearance to the single terminal unit with two terminals provided to allow series connection between the receiver unit and the single terminal unit in the opposite cylinder head. As shown in illustration, this unit consists of a bimetal strip with a contact point, insulated from a supporting frame. The frame also supports a phosphor bronze spring with a contact point in alignment with a bimetal contact, both insulated from ground.

The bimetal assemblies of both sender units are sealed in their respective waterproof casings. The receiver and sender units are both calibrated at the factory and if either one become defective, it should be replaced with a new one.

Operation

The dash unit is connected to the ignition switch and to the series connected engine unit (or units). The dash unit will indicate water temperature only when the ignition switch is turned on. When the ignition is turned off, the pointer will register at the "Hot" position. This does not indicate that the cooling system is overheated but that the pointer is at its normal at rest position.

The dash unit, operated by a heater wire on a bimetal strip, is connected to a bulb in the cylinder head (or one bulb in each cylinder head as in Fig. 14). The bulbs have similar bimetal strips as the dash unit. When the ignition is turned on, current will pass through the dash unit and the engine unit (or units). The single terminal engine unit is normally grounded. However, as the current passes through the engine unit (or units), heat is generated in the single terminal engine unit bimetal, causing it to bend and open the contact to ground. Flow of current is then stopped, permitting the bimetal to cool and return to its normal, grounded position and the cycle is again repeated.

The same amount of current passes through the dash and engine units since they are connected in series with each other. This current also causes the bimetal in the dash unit to become heated and pull the pointer over to the left or right, depending on the temperature of the water. The cycle of opening and closing of the engine unit contact points is repeated continuously.

When the temperature of the water increases, the heat from the circulating water around the single terminal engine unit supplements the heat generated by the current passing through the units,

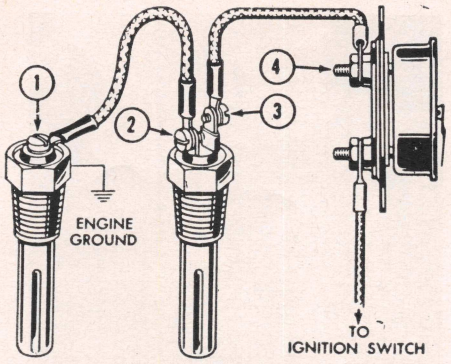

Fig. 15 FORD and KING-SEELEY. Showing check points for testing temperature gauges when two engine units are used

reducing the amount of current necessary to cause the bimetal to draw away from the fixed contact. With less current flowing through the engine unit (or units), less current likewise flows through the dash unit and deflection or bending of the bimetal in the dash unit is lessened.

Service

When the dash unit does not register with the ignition switch turned on, check the engine unit (or units) and wires as follows:

1. With the ignition switch turned off, short out the single terminal engine unit by clipping one end of a jumper wire to its terminal and the other end to ground.
2. Turn ignition switch on momentarily. If the dash unit now gives an indication, then the single terminal engine unit is defective and must be replaced.
3. On Ford V8 engines using two engine units, check the double terminal engine unit as follows: If the dash unit does not register as in step 2, ground terminal "2" of the double terminal engine unit to which the wire connecting the single terminal unit is attached, Fig. 15. Turn the ignition switch on momentarily and observe if the dash unit registers. If it does, then the wire connecting the two engine units is defective.
4. If the dash unit does not register as in step 3, move the clip of the ground wire to terminal "3" of the double terminal engine unit. Turn the ignition switch on momentarily. If the dash unit now registers, then the double terminal engine unit is defective and must be replaced.
5. If the dash unit does not register as in step 4, ground terminal "4" at the dash unit, Fig. 15. If the dash unit registers, then the wire connecting the double terminal engine unit to the dash unit is defective. If the dash unit is still inoperative after the preceding tests, replace the dash unit.

WARNING—In making the above tests, turn off the ignition before the pointer reaches the end of the scale, otherwise the dash unit will become damaged or burned out.

AC OIL PRESSURE GAUGES

Pressure Expansion Type

This type gauge is similar in principle to the vapor-pressure type of water temperature gauge previously described. In this unit, however, oil under pressure passes from the engine unit up the connecting tube to the dash unit. As the pressure builds up it has a tendency to straighten out the C-shaped bourdon tube in the dash unit and thus move the pointer attached to the free end of the tube.

As with the water temperature gauges, engine factors should be considered when checking oil gauge operation. Engine oil should be brought to normal temperature. Pressure at idling speed will vary from 3 to 15 lbs., depending on the make of truck. Above 30 mph engine speed the gauge should show between ½ and ¾ distance across the dial.

If the gauge is jumpy, sticky or uneven in its operation it must be replaced. If it is suspected of being off its calibration, another gauge known to be accurate can be connected to the oil line and checked. If the new gauge indicates correctly, it proves that the old gauge is defective.

Occasionally the operation of the unit can be improved by using a fine wire to clear any accumulation of oxide that may plug the small hole in the oil gauge connection.

Also check the oil line from engine to gauge for leaks. Loosen the nut but do not remove the oil line at the engine block while the engine is running. If oil runs out, the trouble is in either the oil line or dash unit.

Electrical Type

This gauge, Fig. 16, consists of a dash and engine unit connected by a single wire. Each unit is grounded in its respective location.

The indicating unit consists principally of two coils spaced 90 degrees apart with an armature and integral pointer at the intersection of the coil axis. An inertia dampener is provided on the armature to prevent vibration of the pointer on rough roads. The dial has a scale graduated in pounds per square inch.

The engine unit consists of a housing enclosing a diaphragm and linkage which moves a contact over a resistance proportional to oil pressure. The change in engine unit resistance modifies the strength of the indicating unit coils and causes proper indication of the pointer.

Service

Electrical oil pressure gauges are subject to five kinds of troubles:

1. The pointer will not move when the ignition switch is on. Probable

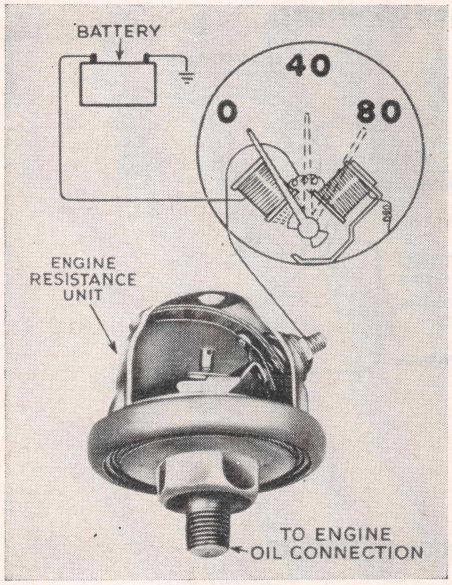

Fig. 16 AC electric oil pressure gauge

causes are (a) defective dash unit, (b) break or poor connection between battery and dash unit, (c) dash unit not grounded.

2. The pointer indicates "high" all the time: Probable causes are (a) defective engine unit, (b) break in dash to engine unit wire, (c) engine unit improperly grounded.
3. The pointer indicates "low" all the time: Probable cause is a short to ground at engine unit terminal or in dash-to-engine unit wire.
4. The pointer never indicates low and is always too high: Probable causes are (a) loose or dirty connections, (b) defective dash unit, (c) defective engine unit.
5. The pointer never indicates high and is always too low: Probable causes are (a) partial ground at engine unit terminal or in dash-to-engine unit wire, (b) defective dash unit, (c) defective engine unit.

To locate the trouble, use the same testing apparatus pictured in Fig. 2 for testing AC fuel gauges, and proceed as follows:

1. Turn off ignition switch.
2. Disconnect one of the battery cables.
3. Disconnect the wire from the oil gauge dash unit which runs to the engine unit.
4. Using the spring clip, connect the colored tester wire to the binding post from which the wire was removed.
5. Connect the black tester wire to the flange of the tester and to any convenient ground—such as the unpainted part of the instrument panel.
6. Turn on the ignition switch.
7. Connect the battery cable. Move the arm of the tester back and forth slowly, Fig. 2. If the dash unit is okay, the pointer will move from the low mark to the high mark freely. If the pointer doesn't move, the dash unit is defective and a new one should be installed.
8. If the dash unit proves to be okay, the next step is to test the wiring between the dash and engine unit. This also can be done with the tester as follows:
9. Turn the ignition switch off and disconnect one battery cable.
10. Follow the wire from the dash to the engine unit, and disconnect the wire at the engine unit.
11. Attach the colored tester wire to the end of the wire which runs to the dash unit. Attach the black tester wire to any convenient ground, such as an unpainted part of the engine.
12. Connect the battery cable. Move the arm of the tester back and forth. If the wiring is okay, the pointer on the dash unit will move from the low mark to the high mark freely. If the pointer doesn't move, or only moves part away, the trouble is in the wire from the dash to engine unit. Repair or replace the wire.
13. If the pointer does move correctly, then the trouble is in the engine unit. If the connection at the engine unit is clean, then a new engine unit must be installed.

AUTO-LITE OIL PRESSURE GAUGES

Pressure Expansion Type

This type gauge is similar to the one described for AC and service is performed in the same manner.

Electric Type

This type gauge, Fig. 17, consists of a dash and engine unit. The dash unit has three magnetic poles, two of which have windings. One of these windings is connected to the ignition switch and to ground and creates a steady magnetic pull towards the "zero" position when the ignition switch is turned on. The other winding is also connected to the ignition switch but is grounded by the engine unit. It creates a magnetic pull toward the maximum pressure position, the strength of which is dependent upon the amount of resistance inserted in the circuit by the engine unit.

The engine unit has a resistance with a sliding contact which is actuated by the oil pressure. When pressure is applied to the diaphragm in the engine unit, resistance is shorted out.

The pointer is mounted on a magnetic vane which is attracted by the two lower magnetic poles and assumes a position between them depending upon the combined magnetic field. A counterweight is mounted on the pointer to bring the reading back to zero whenever the ignition is turned off.

Service

To test a gauge which does not give true indications of the oil pressure, make sure electricity is reaching the dash unit. This can be checked as follows: With ignition switch turned on, connect a test lamp from the "SW" terminal on the dash unit to a ground. If the lamp does not light it indicates no current is reaching the gauge, and the ignition switch, ammeter and wiring should be thoroughly inspected.

If current is reaching the gauge, disconnect the lead from the engine unit and again turn on the ignition. The pointer should stay against the left stop pin (no pressure side). Ground the engine unit lead and the pointer should stay against the right stop pin (high pressure side).

If the test results are not as described above, the source of the trouble may be found by following the same procedure outlined for AC electric oil pressure gauge, but using an Auto-Lite fuel gauge tank unit.

KING-SEELEY & FORD OIL PRESSURE GAUGES

Prior To 1957

These gauges, Fig. 18, consist of a dash unit and engine unit. The dash unit is connected to the ignition switch and in series with the engine unit. When the ignition switch is turned off, the pointer will rest at the extreme left position.

The engine unit contains a diaphragm which is deflected in proportion to the pressure of the oil in the line. When the diaphragm is deflected, an electrical circuit is closed, allowing current to flow through a heating coil wound around a bimetal strip. Heat, generated in this coil, deflects the bimetal to the point where the contact is opened. The bimetal then cools and returns to its original position, which again closes the electrical circuit. This cycle of opening and closing is repeated continuously.

The dash unit contains a similar heating coil formed around a bimetal, connected in series with the coil in the en-

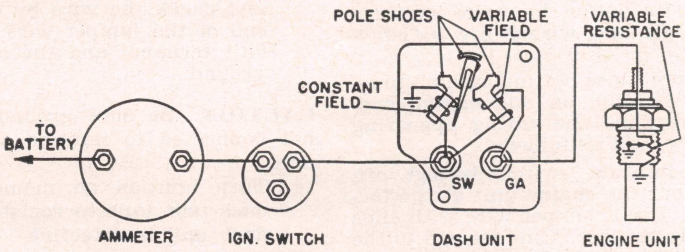

Fig. 17 AUTO-LITE electric oil pressure gauge wiring diagram

gine unit. As heating takes place in the engine unit, heating also takes place in the dash unit, causing the bimetal strip in each unit to deflect simultaneously.

The pointer indicator is linked to the bimetal strip and oil pressure is indicated by the amount of deflection actuating the pointer.

Increased oil pressure causes greater deflection of the diaphragm in the engine unit, therefore a greater amount of current is required to open the heating coil circuit. This increased current is transmitted to the dash unit, causing a corresponding increased bending of the dash unit bimetal and resultant indication of increased oil pressure.

The heating coil in the engine unit is shunted by a calibrating resistor at the time of assembly to assure accuracy of the unit.

Service

If the oil pressure gauge is not functioning properly, make the following tests in the order given until the source of trouble is found. If the dash unit pointer indicates oil pressure upon turning on the ignition switch (engine not running) contacts in the engine unit may be frozen, the wire from the dash-to-engine unit may be shorted to ground, or the dash unit may be defective. If this condition existed for any length of time, it is probable that the dash unit is damaged. To check the gauge, proceed as follows:

1. Check for loose connections at the terminals of the dash and engine units and connections at the ignition switch. Inspect condition of wire from dash-to-engine units and wire from dash unit to ignition switch.
2. Remove wire from engine unit terminal. If pointer of dash unit now remains at zero position (ignition switch turned on momentarily and engine not running) then the engine unit is defective and must be replaced.
3. If the pointer still registers after completing step 1, remove the dash-to-engine unit wire at the dash unit and observe the pointer when the ignition is momentarily turned on (do not start engine). If dash unit does not register now, then the wire between the two units is grounded and must be repaired or replaced.
4. If pointer still registers after completing step 2, then the dash unit is defective and must be replaced. After installing new dash unit, check its action to make sure engine unit and wiring are satisfactory.

If dash unit does not indicate oil pressure with ignition on and engine running, connections and wiring appearing satisfactory, test as follows:

1. With ignition switch turned off, short out the engine unit at the terminal. Use a jumper wire with clips for this purpose. Clip one end to the terminal screw of the engine unit and the other end to engine ground.

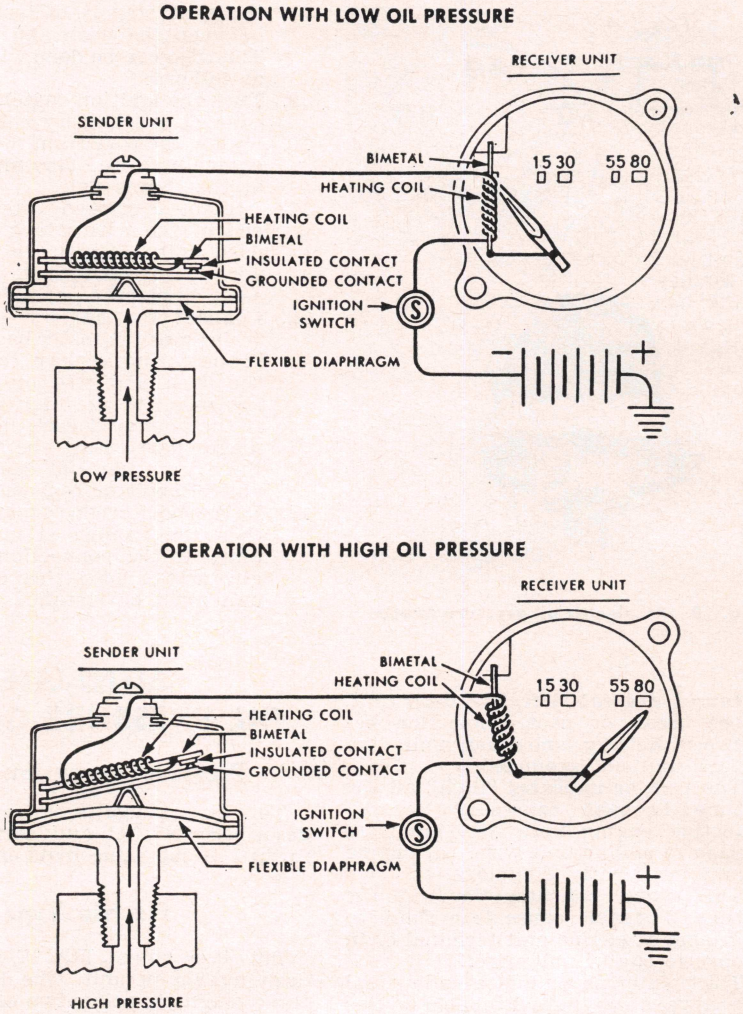

Fig. 18 FORD and KING-SEELEY electric oil pressure gauge (prior to 1957)

2. Turn ignition on momentarily. If dash unit now registers, then the engine unit is defective and must be replaced.

WARNING—Turn ignition off before pointer of dash unit reaches the highest pressure mark on the scale. In this test the full voltage of the battery is placed on the dash unit and if allowed to remain for a longer period of time, the unit will burn out.

3. If the dash unit fails to register with the engine unit shorted out as in step 2, either the dash unit or the wire running to the engine unit is defective. Turn ignition switch off and check the wire by clipping one end of the jumper wire to the dash unit terminal and the other end to ground.

CAUTION—Be sure grounding wire is not connected to ignition side of dash unit.

4. Turn ignition on momentarily. If dash unit fails to register, then the dash unit is defective.
5. A defective engine unit or wiring may have damaged the dash unit. After installing a new dash unit, observe its action after turning ignition on momentarily. If the indicator moves beyond the point of normal oil pressure, the engine unit or wiring is defective and must be checked.

OIL PRESSURE WARNING LIGHT

Some late model vehicles utilize a warning light on the instrument panel in place of the conventional dash indicating gauge to warn the driver when the oil pressure is dangerously low. The warning light is wired in series with the ignition switch and the engine unit—which is an oil pressure switch.

The oil pressure switch contains a diaphragm and a set of contacts. When the ignition switch is turned on, the warning light circuit is energized and the circuit is completed through the closed contacts in the pressure switch. When the engine is started, build-up of oil pressure compresses the diaphragm, opening the contacts, thereby breaking the circuit and putting out the light.

Trouble Shooting

The oil pressure warning light should go on when the ignition is turned on. If it does not light, disconnect the wire from the engine unit and ground the wire to the frame or engine block. Then if the warning light still does not light when the ignition switch is on, replace the light bulb.

If the warning light goes on when the wire is grounded to the frame or cylinder block, the engine unit should be checked for being loose or poorly grounded. If the unit is found to be tight and properly grounded, it should be removed and a new one installed. (The presence of sealing compound on the threads of the engine unit will cause a poor ground.)

If the warning light remains lit when it normally should be out, the wire from the light to the engine unit may be grounded. To check for this condition, disconnect the wire at the engine unit and if the light remains lit a ground is indicated. If the light goes out, then the engine unit is at fault and it should be replaced.

The warning light sometimes will light up or will flicker when the engine is idling, even though the oil pressure is adequate. However the light should go out when the engine is speeded up. There is no cause for alarm in such cases; it simply means that the pressure switch is not calibrated precisely correct.

AMMETERS

Automotive ammeters indicate direction of current flow (charge or discharge) and the relative amount of current flow. The center point of the dial, Fig. 19, is the point of zero current flow and the two extremes of pointer travel indicate maximum charge and discharge. Therefore, the indicator must not be read for the amount of current charge or discharge but only for charge condition of the generating system.

The typical ammeter consists of a frame to which is attached a permanent magnet. The frame also supports an armature and pointer assembly. When no current flows through the ammeter, the magnet holds the pointer armature so that the pointer stands in the center of the dial. When current passes in either direction through the ammeter, the resulting field attracts the armature away from the affect of the permanent magnet, thus giving a reading proportional to the current strength.

Service

When the ammeter apparently fails to register correctly, there may be trouble in the wiring which connects the ammeter to the generator and battery, or in the generator and battery themselves. There are only a few simple things to check in order to find the cause:

1. Loose connections on the back of the ammeter.
2. Loose connections at the back of the ignition switch, or at the battery. (Ammeters are not grounded to the instrument panel.)

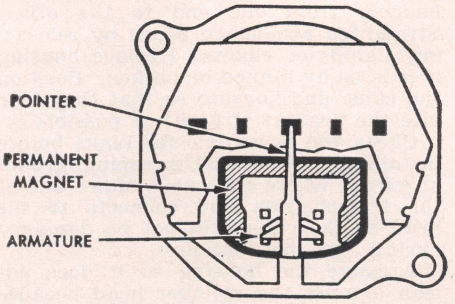

Fig. 19 Drawing of a typical ammeter or battery charge indicator

3. Spots on the wiring where the insulation has been chafed, burned or broken.

To check the connections, first tighten the two binding posts on the back of the ammeter. Then, following each wire from the ammeter, tighten all connections on the ignition switch, battery and generator. Chafed, burned or broken insulation can be found by following each ammeter wire from end to end.

After checking and repairing the wiring, tighten all connections and turn the ignition switch on. The pointer should point to the discharge side of the dial slightly. Start the engine and speed it up to about 30 mph. The pointer should then move to the charge side of the dial and its movement should be smooth.

If the pointer does not behave correctly the ammeter itself is out of order and must be replaced with a new one.

GENERATOR TELLTALE LIGHT

Some late model vehicles utilize a light on the instrument panel in place of the conventional ammeter to indicate to the driver when the generator is charging the battery. The telltale element is a panel-mounted window (usually red) behind which is mounted a small lamp bulb. The bulb lights whenever the ignition switch is turned on and the generator not charging.

Auto-Lite System

When the ignition switch is turned on the circuit is completed from the ignition switch, through the bulb, to a special terminal on the voltage regulator, to the insulated contacts on top of the circuit breaker, to the grounded strap of the circuit breaker.

As the engine is started and generator speed is increased to a car speed of approximately 10 mph, the generator develops sufficient voltage to pull down the circuit breaker armature, closing the main contact points and opening the telltale contacts, causing the light to go out.

If the lamp bulb does not light when the ignition is turned on, ground the telltale terminal *to the engine* (not to another regulator terminal). If the bulb still does not light, check for loose connections or a burned out telltale bulb. If the lamp lights when the telltale terminal is grounded, the main circuit breaker contacts are probably fused (stuck closed) or the armature coil spring is weak or broken.

Delco-Remy System

In this system the generator telltale light is connected in a circuit with the battery and generator. When the generator begins to charge, the voltage build-up in the circuit opposes the battery voltage to the telltale light. As the differential between these two voltages decreases, the light goes out.

If the light stays on after the engine is started and running a little above idling speed, the generator should be checked.

If the light does not go on when the ignition switch is turned on before the engine is started, the telltale bulb should be checked. If the bulb is OK, check the entire telltale circuit for loose connections or for an open circuit.

SPEEDOMETERS

The following material covers only that service on speedometers which is feasible to perform by the average service man. Repairs on the units themselves are not included as they require special tools and extreme care when making repairs and adjustments and only an experienced speedometer mechanic should attempt such servicing.

The speedometer has two main parts —the indicating head and the speedometer drive cable. When the speedometer fails to indicate speed or mileage, the cable or cable housing is probably broken.

Speedometer Cable

Most cables are broken due to lack of lubrication, or a sharp bend or kink in the housing.

A cable might break because the speedometer head mechanism binds. If such is the case, the speedometer head should be repaired or replaced before a new cable or housing is installed.

A "jumpy" pointer condition, together with a sort of scraping noise, is due, in most instances, to a dry or kinked speedometer cable. The kinked cable rubs on the housing and winds up, slowing down the pointer. The cable then unwinds and the pointer "jumps."

To check for kinks, remove the cable, lay it on a flat surface and twist one end with the fingers. If it turns over smoothly the cable is not kinked. But if part of the cable flops over as it is twisted, the cable is kinked and should be replaced.

Lubrication

The speedometer cable should be lubricated with special cable lubricant every 10,000 miles. At the same time, put a few drops of the lubricant on the wick in the speedometer head.

Fill the ferrule on the upper end of the housing with the cable lubricant. Insert the cable in the housing, starting

at the upper end. Turn the cable around carefully while feeding it into the housing. Repeat filling the ferrule except for the last six inches of cable. Too much lubricant at this point may cause the lubricant to work into the indicating head.

Installing Cable

During installation, if the cable sticks when inserted in the housing and will not go through, the housing is damaged inside or kinked. Be sure to check the housing from one end to the other. Straighten any sharp bends by relocating clamps or elbows. Replace housing if it is badly kinked or broken. Position the cable and housing so that they lead into the head as straight as possible.

Check the new cable for kinks before installing it. Use wide, sweeping, gradual curves where the cable comes out of the transmission and connects to the head so the cable will not be damaged during its installation.

Arrange the housing so it does not lean against the cylinder head because heat from the engine may dry out the lubricant.

If inspection indicates that the cable and housing are in good condition, yet pointer action is erratic, check the speedometer head for possible binding.

The speedometer drive pinion should also be checked. If the pinion is dry or its teeth are stripped, the speedometer may not register properly.

The transmission mainshaft nut must be tight or the speedometer drive gear may slip on the mainshaft and cause slow speed readings.

FUEL PUMPS

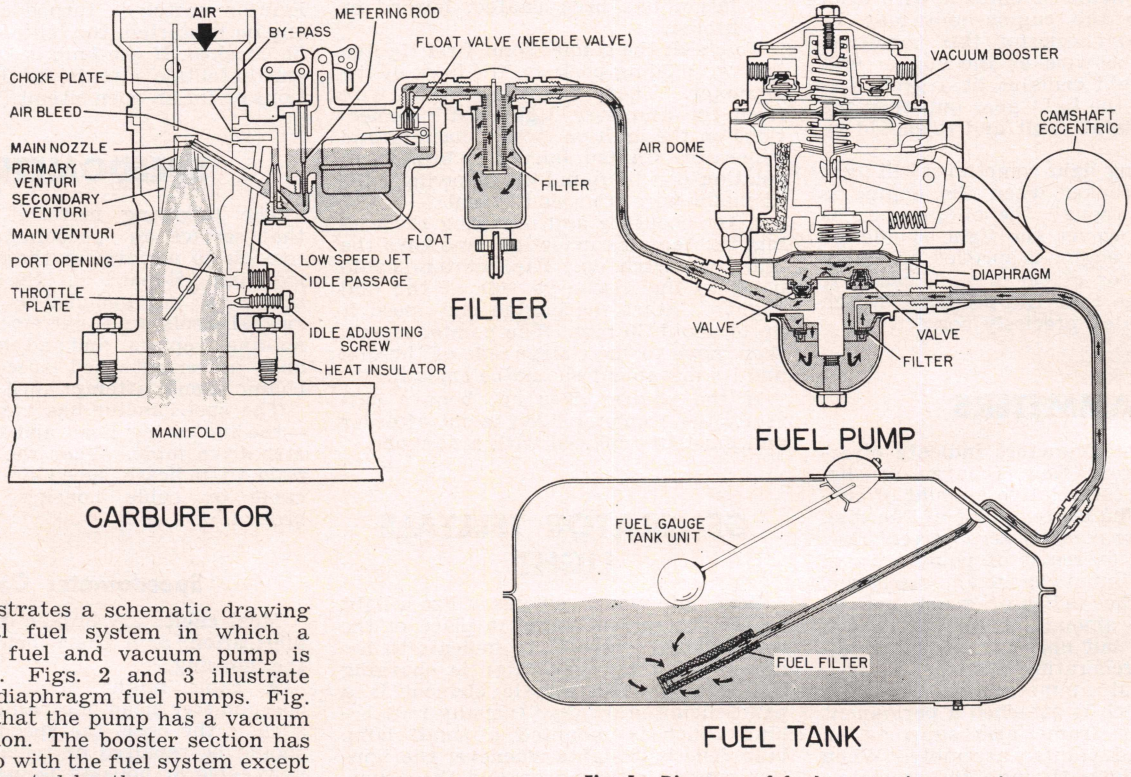

Fig. 1 illustrates a schematic drawing of a typical fuel system in which a combination fuel and vacuum pump is incorporated. Figs. 2 and 3 illustrate two typical diaphragm fuel pumps. Fig. 4 differs in that the pump has a vacuum booster section. The booster section has nothing to do with the fuel system except that it is operated by the pump arm.

Fig. 1 Diagram of fuel system in operation

Fuel Pump Operation

During the first or suction stroke, the rotation of the eccentric on the camshaft operates the pump operating arm which pulls the lever and diaphragm downward against the pressure of the diaphragm spring, producing a suction in the pump chamber. The suction holds the outlet valve closed and pulls the inlet valve open, making the fuel flow from the supply tank through the inlet up through the filter screen and down through the inlet valve into the pump chamber. During the return stroke, the diaphragm is forced up by the diaphragm spring, the inlet valve closes and the outlet valve is forced open, allowing the fuel to flow through the outlet to the carburetor.

Vacuum Section Operation

The vacuum section of combination pumps operates the windshield wipers at almost constant speed. The rotation of the camshaft eccentric in this type pump also operates the vacuum booster section by actuating the pump arm which pushes a link and bellows diaphragm downward, expelling air in the vacuum chamber through its exhaust valve out into the intake manifold of the engine. On the return stroke of the pump arm, the diaphragm is moved upward, producing a suction in the vacuum chamber. This suction operates the vacuum section and draws air through the inlet passage from the windshield wiper.

Fuel Pump Performance

It is essential that the fuel pump deliver sufficient fuel to supply the requirements of the engine under all operating conditions and that it maintain sufficient pressure in the line between the pump and carburetor to keep the fuel from boiling and to prevent vapor lock.

Excessive fuel pump pressure holds the carburetor float needle valve off its seat, causing high gasoline level in the float chamber which in turn increases gasoline consumption.

The pump usually delivers a minimum of ten gallons of gasoline per hour at top engine speeds, under an operating pressure of from 2 to 6 psi (depending on the installation). The highest operating pressure will be attained at idling speed and the lowest at top speed.

Fuel Pump Tests

The fuel pump can be tested on the

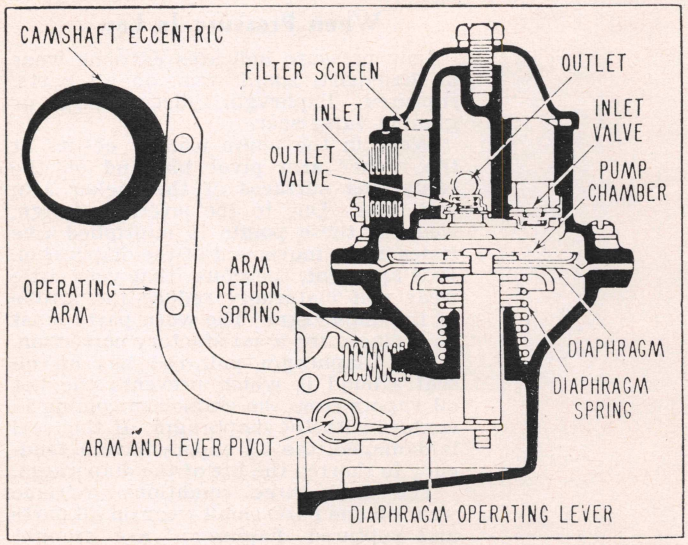

Fig. 2 Fuel pump with built-in fuel filter

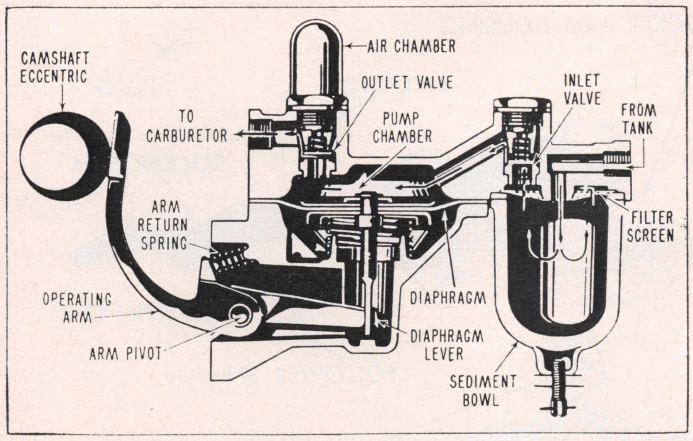

Fig. 3 Fuel pump with separate fuel filter

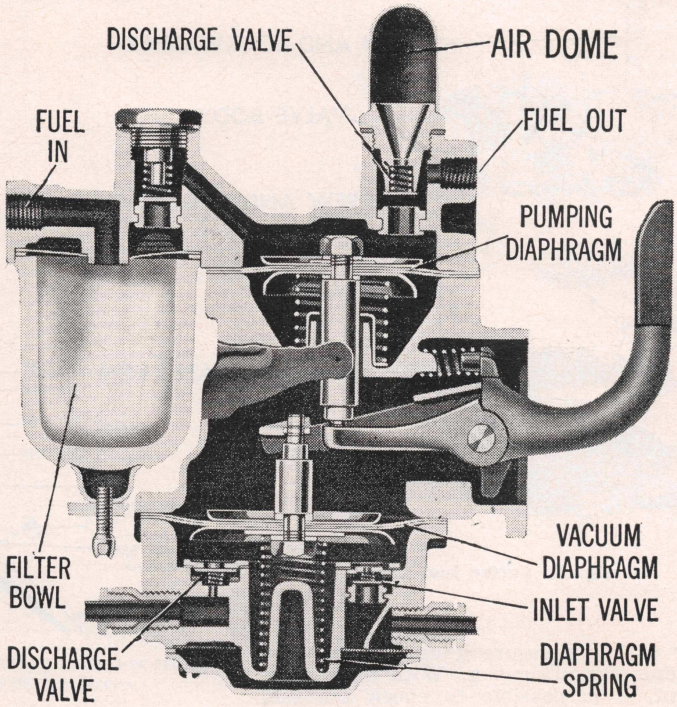

Fig. 4 Fuel pump with fuel filter and vacuum booster for windshield wiper operation

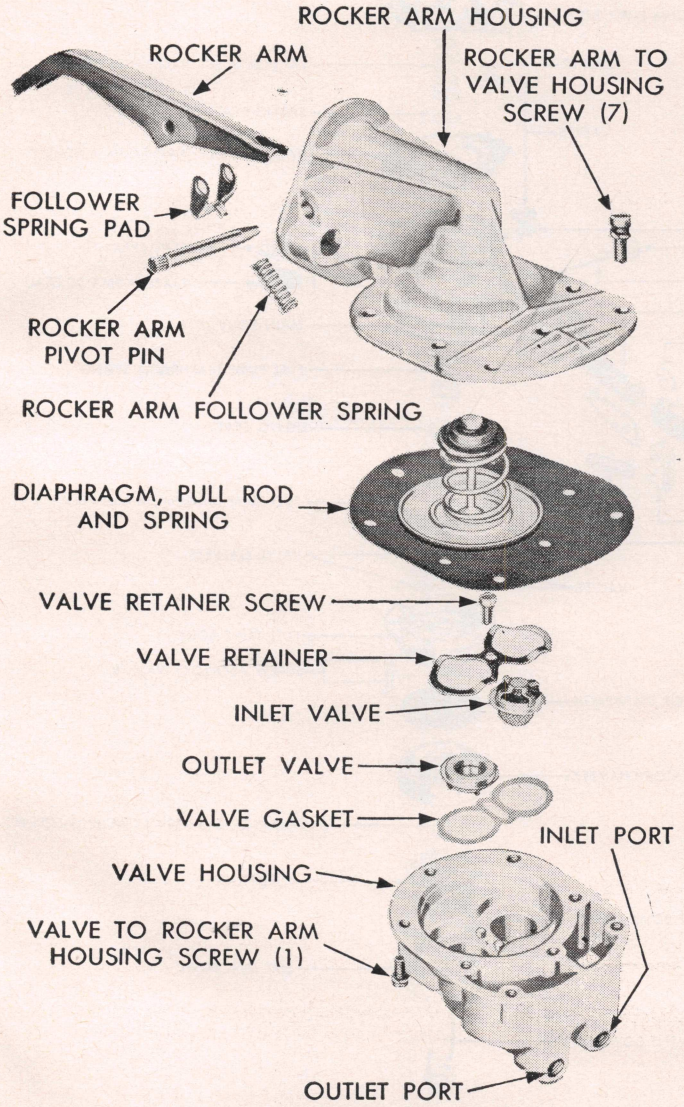

Fig. 6 Auto-Lite fuel pump

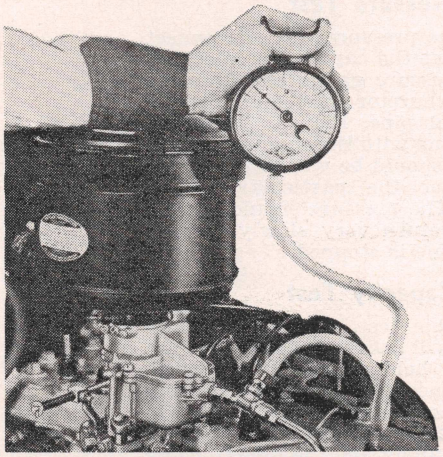

Fig. 5 Testing fuel pump pressure

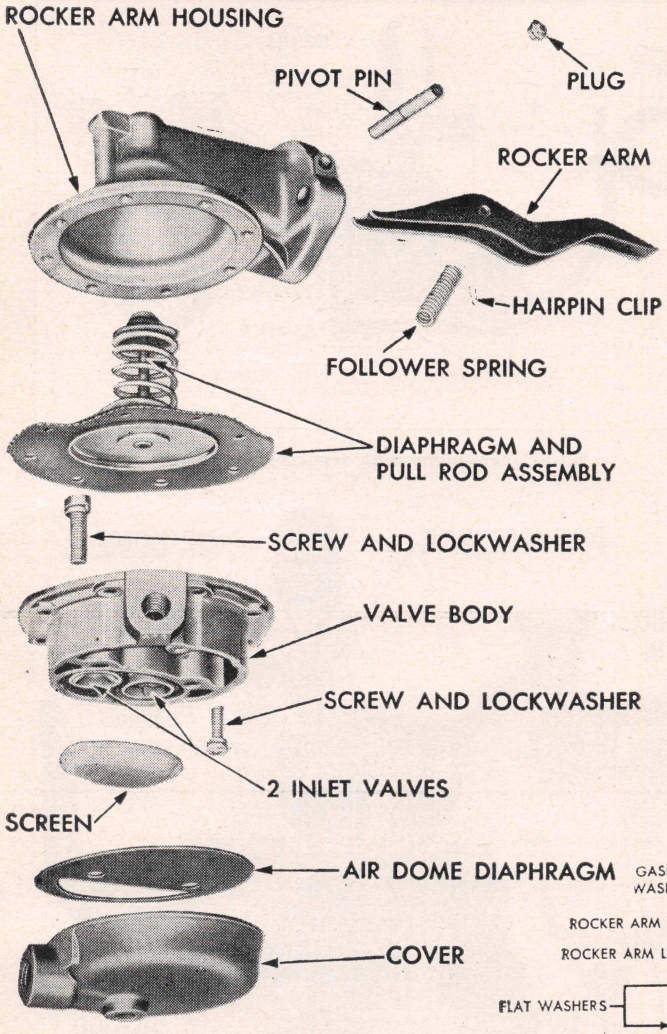

Fig. 7 Carter fuel pump

car with a pressure gauge, a hose and a pint measuring can. With this equipment, it is possible to check the fuel pump to see if it is delivering the proper amount of gasoline at the correct pressure.

Pressure Test

To make the pressure test, disconnect the fuel pipe at the carburetor inlet and attach the pressure gauge and hose between the carburetor inlet and the disconnected fuel pipe, Fig. 5. Take the pressure reading with the engine running. The pressure should be within the limits permissible for the particular vehicle installation. The pressure should remain constant or return very slowly to zero when the engine is stopped.

Capacity Test

To make this test, connect the hose so the pump will deliver gasoline into the pint measure held at carburetor level. Run the engine at idle speed and note the time it takes to fill the measure. On the average it should take from 20 to 30 seconds, depending on the pump being tested.

When Pressure Is Low

Low pressure indicates extreme wear on one part, small wear on all parts, ruptured diaphragm, dirty valve or gummy valve seat.

Wear in the pump usually occurs at the rocker arm pivot pin and on the contacting surfaces of the rocker arm and links. Due to the leverage design, wear at these points is multiplied five times in the movement of the diaphragm. It is apparent, therefore, that very little wear will materially reduce the stroke of the diaphragm. The worn parts must be replaced for a satisfactory correction.

The diaphragm pull rod has an oil seal around it which prevents the hot oil vapors from the crankcase coming in contact with the diaphragm. If this seal is damaged, the oil vapors have a tendency to shorten the life of the diaphragm.

The first three conditions—extreme wear on one part, small wear on all parts and ruptured diaphragm—are brought

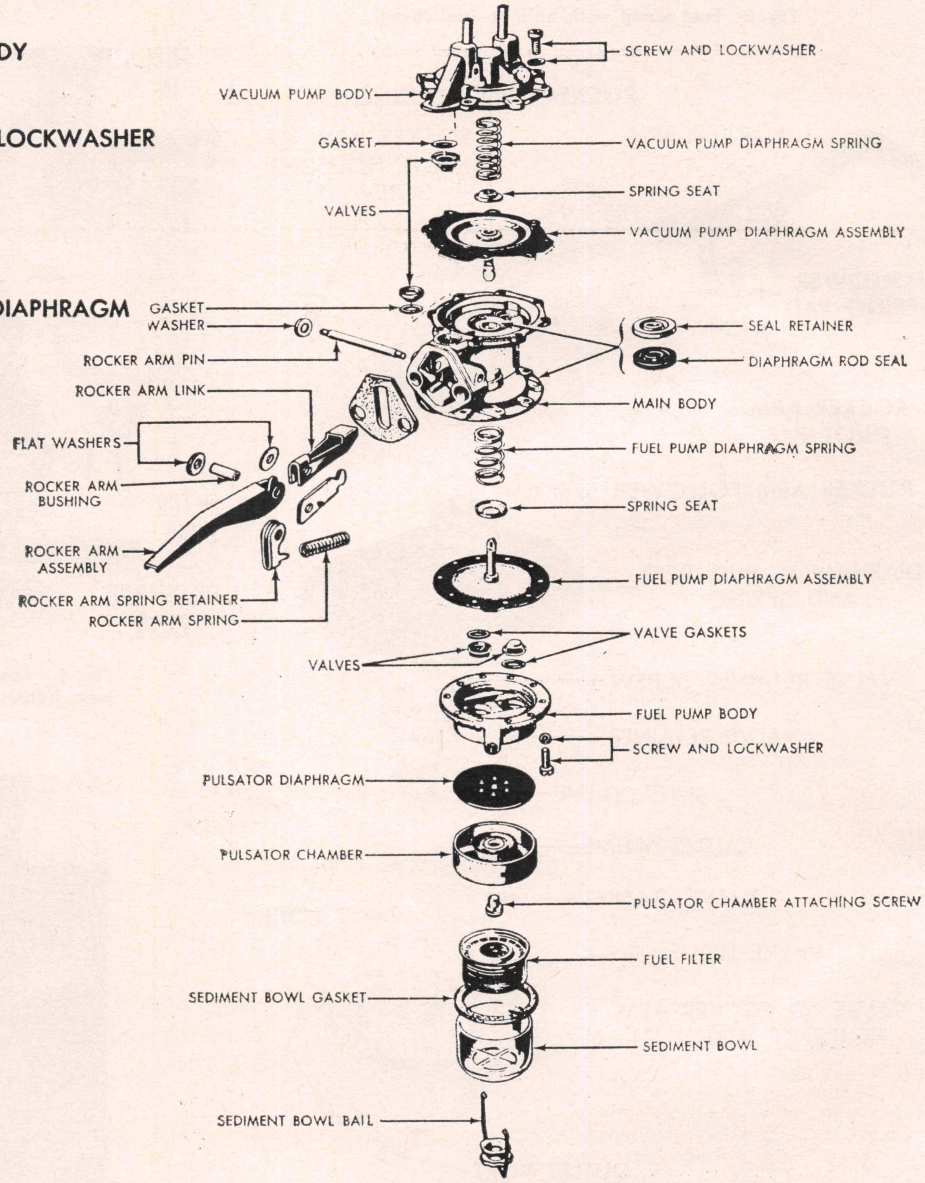

Fig. 8 A.C. combination pump with four vacuum valves and built-in fuel filter

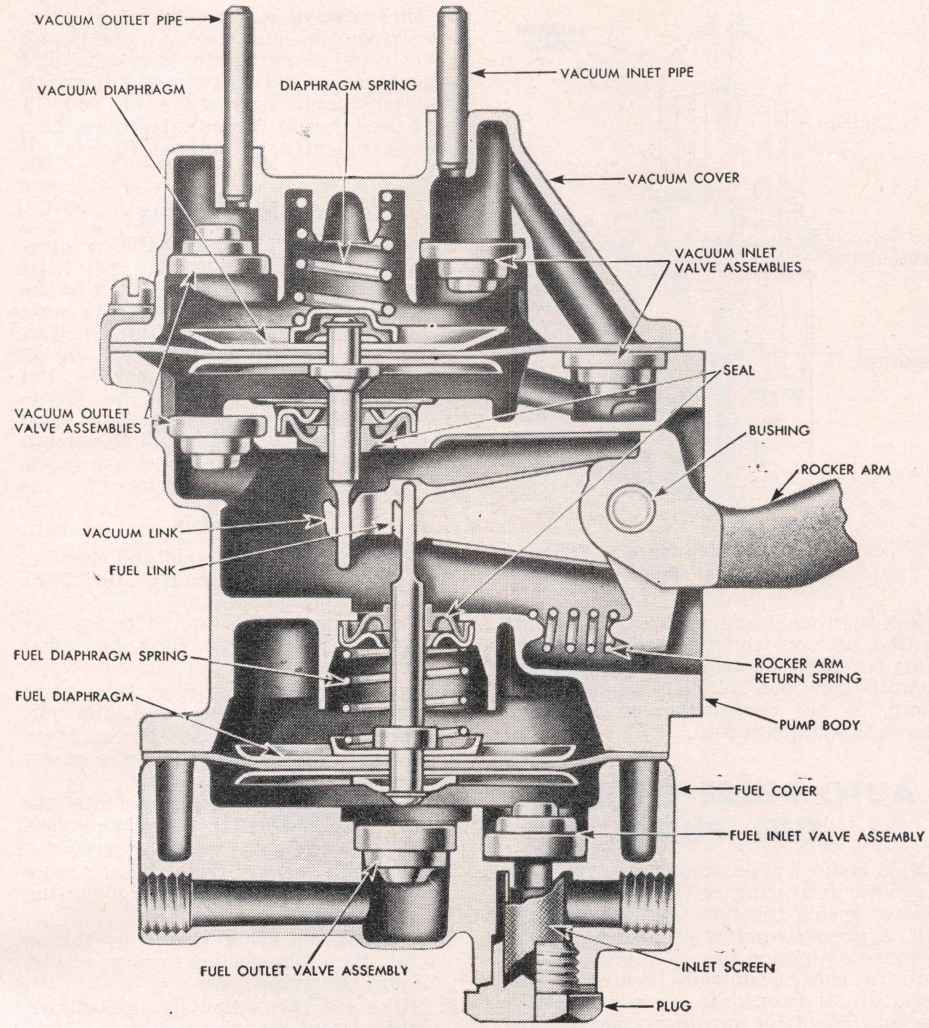

Fig. 9 A.C. combination pump with four vacuum valves

about by usage, while dirty and/or poor fuel is usually the cause of valve trouble.

When Pressure Is High

High pressure is caused by a tight diaphragm, fuel between diaphragm layers, diaphragm spring too strong, pump link frozen to rocker arm.

A tight diaphragm will stretch slightly on the down stroke. As the pump operates, the diaphragm will rebound on the up stroke beyond its normal position, much as a stretched rubber band when it is suddenly released. This rebound will cause a higher than normal pressure in the pump chamber.

A loose diaphragm retainer nut or poor riveting on the diaphragm assembly may allow fuel to seep between the diaphragm layers. This will cause a bulge in the diaphragm and have the same effect as a diaphragm that is too tight.

A diaphragm spring that is too strong also causes a high pressure, for the diaphragm will operate longer before pressure of the fuel on the diaphragm will overcome the diaphragm spring.

On a combination pump there are times when the operating parts may become badly corroded and the links freeze to the rocker arm. In this condition the pump operates continually, resulting in a very high pressure and a flooding carburetor.

The remedy for all these conditions is to remove the pump for replacement or repair, using a repair kit.

When Capacity Is Low

A pump is extra efficient and will never starve the engine when it supplies fuel equal to or above the capacity of the pump. The pressure, of course, must be within specifications.

Low capacity is usually caused by an air leak at the intake pipe at these points: fuel pipe fitting at pump, bowl flange or diaphragm flange, fuel bowl. (It is assumed that the conditions of too little fuel have already been checked and the fuel pump is the cause of the difficulty.)

An air leak at the fuel pipe fittings indicate either poor installation of pump or a defective fitting. The fitting should be tightened or replaced.

A leak at the diaphragm flange may be caused by a warped cover casting, loose diaphragm cover screws or foreign material between cover casting and diaphragm.

A leak at the bowl flange of the cover casting can usually be corrected by the installation of an extra gasket. A warped top cover indicates that the pump must be replaced.

A chipped glass or bent metal bowl may cause a leak at the bowl flange as may a defective gasket or foreign material between gasket and bowl or cover casting. A chipped glass bowl must be replaced while a dented metal bowl can be straightened.

Vacuum Pump Troubles

To assist the manifold vacuum to operate the windshield wiper at a uniform rate under any engine load is the only function of the vacuum pump. Of course, "uniform rate" infers a wet windshield and not one covered with snow or ice. Failure to do the above indicates difficulty in either the vacuum system of the pump, windshield wiper motor, or tubes and connections.

Symptoms of trouble in the vacuum section show up in four ways: oil consumption, slow windshield wiper action, poor idle, noise.

In some cases it has been found that an engine which has given very good oil mileage suddenly appears to be using oil. Upon investigation, it will often be found that the vacuum booster has a ruptured diaphragm and is drawing oil fumes from the crankcase into the intake manifold. This can be checked by removing the cover of the vacuum section.

When the windshield wiper slows down excessively under engine load, it usually is an indication of a ruptured vacuum diaphragm or defective valve action in the vacuum pump. This condition may not be discovered immediately as the windshield wipers may not be used for long intervals.

Oil will be evidenced in the cover casting recesses if the diaphragm is ruptured. The pump should be removed and the diaphragm replaced.

On some vehicles the engine will idle very poorly when the vacuum diaphragm is ruptured. This is true when the tube from the vacuum pump is connected to one end of the intake manifold. The air leak through the vacuum section will give those cylinders on the end a lean mixture which results in a miss or poor idle. In many cases, this leads one to believe the valves of the engine are sticking; but if they are ground, the miss or poor idle remains.

This condition can be checked by removing the vacuum pump tube at the manifold and plugging the hole. If the miss or rough idle disappears, the trouble is an air leak through the pump or tube connections. The pump should be removed and repaired or the connections tightened to eliminate this trouble.

Sometimes a combination pump will give off a peculiar grunting sound on idle. In some cases this can be remedied by stuffing curled horse hair into the pump breather.

Vacuum Pump Test

With a combination fuel and vacuum pump the windshield wiper should operate at 80 to 100 strokes per minute through all ranges of car speed and load. The windshield should be wet when the test is made, otherwise the action will be slow.

Checking With Vacuum Gauge

To check the vacuum section, disconnect both inlet and outlet tubes and attach a vacuum gauge to the inlet (side that goes to windshield wiper). It is assumed that the engine, windshield wiper motor and blade, and connecting tubing have been checked and are in satisfactory condition.

Read the gauge when the engine is running at 1000 rpm (about 20 mph). It should read from 7 to 12 inches of vacuum on a normal pump. If the reading is less than 7, the pump should be removed and repaired or replaced. When making this test, the tube to the manifold should be plugged and the pump outlet should always be open or damage may result to the mechanism.

Checking Without Gauge

Disconnect the outlet tube (to manifold) from the pump and plug the end. Then operate the engine from idle through slow acceleration to about 40 mph. If the wiper starts operating at about 15 mph and reaches full speed at about 40 mph, the vacuum section is okay. If it does not operate, it may be the windshield wiper motor. This can be checked by connecting the intake manifold directly to the windshield wiper tube. Then slowly accelerate the engine from idle to about 25 mph. The wiper should operate at full speed. If it does not it can be assumed that the wiper motor or tubing is defective.

Fuel Pump Service

Illustrated are representative fuel pumps among the many models that have been produced. Before disassembling any pump, scribe a mark across the housings in such a manner that they may be reassembled with inlet and outlet fitting holes in correct location.

When disassembled, clean all parts (except diaphragms) in solvent and blow dry with compressed air. Examine the diaphragm for cracks, torn screw holes or ruptures. If deteriorated, install new diaphragm and pull rod assembly. Check the strainer screen and if found to be corroded or clogged, install a new screen.

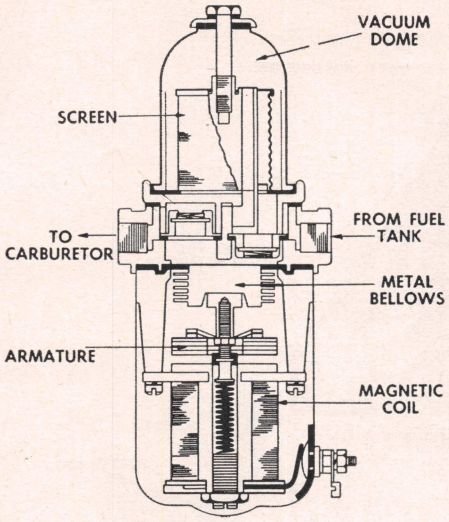

Fig. 10 Auto Pulse electric fuel pump

Check the rocker arm for wear or scoring on that portion which contacts the camshaft eccentric. If arm is scored or worn, install a new one. When reassembling a pump, do not use shellac or other adhesive on a diaphragm.

AUTO PULSE ELECTRIC FUEL PUMP

This bellows type pump, Fig. 10, has a magnetic activating coil in the base with a drive spring through the center of the coil. A pressure screw is incorporated to increase or reduce the drive spring pressure to control output pressures. The armature and contacts are located above the coil. The drive spring presses against a vertical shaft to which the upper contacts and one-piece metal bellows are attached. The bellows, in addition to performing the pumping action, acts as a seal between the pumping chamber and the electric mechanism. The pumping chamber is above the electric mechanism and consists of an inlet and outlet valve through which the fuel flows. A screen is located in the top, or dome, of the pump.

Operation

On the intake stroke the coil is energized, extending the bellows and compressing the drive spring. The bellows then returns to its normal position in the pressure stroke, pushing fuel through the outlet valve. The contacts are open during this interval. At the end of the pressure stroke, the contacts close, energizing the coil and drawing the armature and bellows downward on the intake stroke. Electrical contact is made for only a short time during the intake stroke. This cycle is repeated as long as fuel is required.

Trouble Shooting

Disconnect the fuel line at the carburetor and turn on the ignition switch. If ample fuel flows, the pump is okay. If the pump races but fuel does not flow in sufficient volume, the cause is an air leak in the suction portion of the fuel line. If fuel does not flow at all, inspect the fuel lines for restrictions or check the electrical connections for a shorted or open circuit. If all is in order and the pump still does not operate, remove the pump and replace or repair as necessary.

Disassembly

1. Take off the filter bowl and screen.
2. Remove two screws attaching filter base to pump base.
3. The electrical unit of the pump may be exposed by removing he lower cover.
4. To separate the coil from the rest of pump, remove the pressure nut screw. Then use a ¼″ magneto wrench and loosen the drive screw nut below the bellows stud.
5. Insert a thin screwdriver into the coil hole and loosen the drive screw.
6. Remove the coil mounting screws.
7. Separate the coil from the armature by removing the armature mounting screws.
8. The bellows are removed by taking out the four bellows ring screws from the pump base.
9. Take out the bellows ring, bellows, gasket and air seal gasket.

Inspection

Wash the filter and bowl in solvent and blow dry with compressed air. The valves may be resurfaced with crocus cloth. Clean the faces of the pump base and bellows ring with a soft, dry cloth. Replace all defective electrical parts.

Assembly

Reverse the disassembly procedure to reassemble the pump, bearing in mind the following: Always use a new bellows when rebuilding this type pump. Make sure the inlet and outlet valves are not tight in their chambers. Use new gaskets throughout the assembly.

LPG CARBURETION

INTRODUCTION

LPG (liquid petroleum gas) is an ideal engine fuel similar to gasoline. Both are a product of crude oil but they differ in that LPG is more volatile; that is it wants to boil or become a vapor at ordinary atmospheric temperatures. When used in an internal combustion engine, LPG is converted from a liquid in the fuel tank to a dry gas before reaching the combustion chamber. By good carburetion and perfect mixing of dry gas with air, uniform distribution throughout the manifold is achieved. With gasoline, or wet fuel, this uniform mixture and distribution is not attained.

With complete burning at a rate slower than gasoline, LPG makes for smoothness of operation because of prolonged power impulses on the power stroke and more uniform bearing pressures.

Being a dry gas, crankcase dilution is minimized and likewise all ill effects such as thinning of the lubricating oil and washing the lubricating oil from the cylinder walls with resultant cylinder wear are eliminated. Lubricating oil can be safely used much longer than on gasoline due to the elimination of carbon deposits, dirt, acid, and water content in the lubricating oil.

Harmful carbon within the engine is eliminated. There is no exhaust smoke or obnoxious odors. The time interval between engine shut-downs for overhaul is prolonged. Rings, valves, cylinders, and all moving parts lubricated from the crankcase last longer, resulting in a very substantial reduction in cost of keeping equipment in operation.

DESCRIPTION

Butane and propane gases, captured at the refinery and liquefied by being put under pressure, are blended to a desired mixture and pumped as a liquid under pressure into specially constructed heavy steel tanks mounted on the truck. Tank pressures will vary from 20 to 175 psi (pounds per square inch) depending on the butane-propane mixture and atmospheric temperature. By reason of this tank pressure, no fuel pump is necessary. L. P. Gas tanks are never filled 100% full as 10% to 20% space must be allowed above the liquid for expansion.

Fig. 1 shows the flow diagram of the system.

Filtering

From the tank the liquid is piped to a liquid filter where scale from tank and fittings, and dirt or other solids are removed. From the filter, the L. P. Gas goes into the regulating unit. Final filtering is accomplished through a fine metal screen inserted in the fuel inlet connection of the regulator to further eliminate passage of undesirable foreign matter into the regulator.

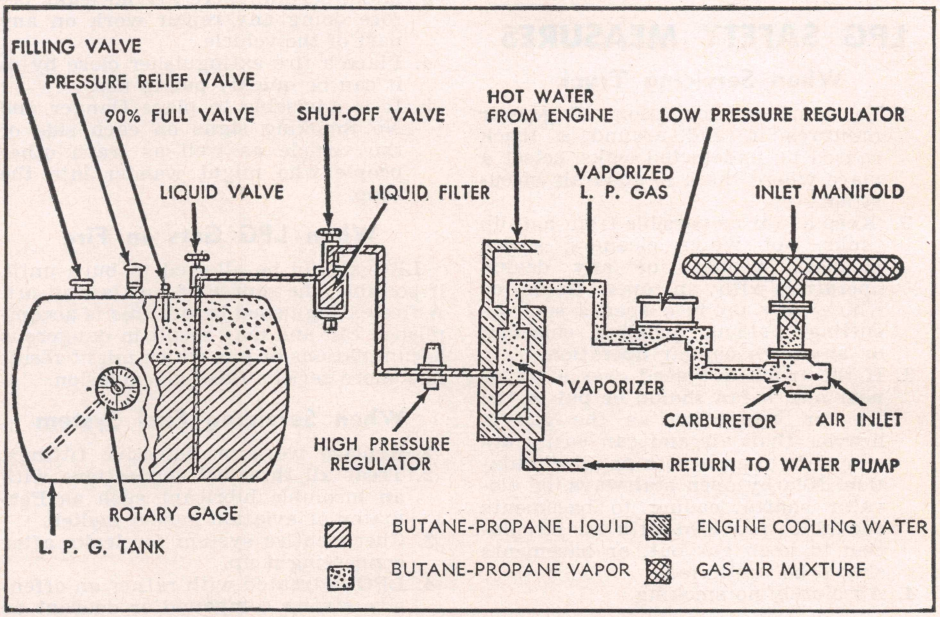

Fig. 1 Fuel diagram of LPG (liquid petroleum gas) fuel system

Primary or High Pressure Regulation

Liquid butane is dropped from tank pressure (20-175 psi) down to a regulated 1 to 10 psi. By use of the oil-controlled pressure regulator, the pressure is maintained at 1 psi with engine stopped and 10 psi when engine is running.

Vaporization

This function is performed by the vaporizer coils heated by hot water circulated by the engine. The high pressure valve would freeze up under the rapid expansion of gases were it not for the application of heat. This is accomplished by taking hot water from the water manifold, directing it first around the expansion valve, then around the heating coils to vaporize the expanded fuel, then returning it to the intake side of the water pump.

In starting a cold engine, there is sufficient differential in temperature between the extremely cold expanding butane and the parts surrounding the valve to provide latent heat for initial vaporization. However, it is desirable, especially in cold weather, to take vapor from the supply tank for starting and engine warm-up.

Final Pressure Regulation

The final regulator in the regulating unit further reduces the pressure of the completely vaporized butane from its 1 to 10 psi to slightly below atmospheric pressure. This final or "metering" regulator is actuated by engine vacuum or "suction" by the intake stroke which opens the final fuel regulator sufficiently to allow enough fuel to pass along to the carburetor to run the engine according to throttle opening. It actually regulates the supply of gas and shuts off the supply when the engine is stopped.

Idling System

The final regulator also contains the idling system. Even though most fuel used for idling enters the carburetor through the main gas orifice, additional and supplemental fuel for idling is taken from the final regulator and by-passed to a point in the carburetor directly above the throttle disc. The idle adjustment is in this line. This source of idling fuel is independent of the main gas supply to the carburetor and is controlled by an entirely different system. The two sources combine to produce the correct idling mixture.

Carburetion

From the regulating unit, the L. P. Gas is piped to the carburetor for final mixing and proportioning of the fuel with air. The carburetor is closely related to the final regulator of the regulating unit and with the two in correct coordination, air-fuel ratios are automatically controlled for greatest power, economy and flexibility.

The carburetor has an "easy-starting" feature wherein by pulling the choke entirely shut, a separate air-gas mixing device is put into operation to produce a pre-determined starting mixture. A separate adjustment is provided on the carburetor for adjusting the starting mixture. When the choke is released, the starting device is rendered inoperative and the main carburetor air-fuel orifices come into play. Therefore, the choke must be entirely *closed* for starting and entirely *open* for running.

A fuel economizer, actuated by manifold vacuum, is also utilized to reduce fuel consumption when operating at less than 80% full power.

LPG SAFETY MEASURES

When Servicing Truck

1. To avoid accumulation of gas-air mixtures in and around a truck caused by undetected leaks, select a place where there is good air circulation.
2. Keep as far as possible from hot dip tanks, hot water cleaners, steam cleaners, welders or any device operating, with an open flame or which may produce sparks such as cutting, welding, grinding, chiseling or any such similar operation.
3. If the truck is placed over a pit or near one, a fan should be put in the pit for ventilation as the gas is heavier than air and can easily accumulate in a pit with no air circulation. Nearby open stairways, or elevator shafts leading to basements should be provided with air circulation to keep gas out, or basements should be ventilated.
4. Absolutely no smoking.

Preparing Truck for Service

1. Before taking the truck into the shop for service, exhaust all fuel from the system by shutting off the main valves at the fuel tanks and allowing the engine to run until it stops. Then turn off the ignition.
2. Before towing a disabled vehicle into the shop, shut the valve at the tank and bleed the fuel system of all fuel and gas.
3. Never bring a vehicle into the shop without first checking the fuel system and fuel tanks for leaks.

Before Starting Repairs

1. Remember that the fuel system is pressurized.
2. Make certain the tank valves are tightly closed and all fuel exhausted from the lines before starting any repair work on the fuel system.
3. Make certain there are no leaks before doing any repair work on any part of the vehicle.
4. Place a fire extinguisher close by so it can be quickly put to use.
5. It is advisable to place Danger and No Smoking signs on each side of the vehicle as well as warn other people who might wander into the shop.

When LPG Gets on Fire

LPG should be allowed to burn until, if possible, the source of fuel is shut off. A fire extinguished before this is accomplished can and may result in dangerous accumulations of gas which might result in a more serious flash or explosion.

When Servicing Fuel System

1. Replace worn or defective fittings.
2. Treat all threaded connections with an insoluble lubricant such as Permatex or aviation gasket maker.
3. Check entire system for leaks after connecting it up.
4. LPG is treated with rather an offensive strong compound or odorant as a warning agent to indicate even small quantities of gas leakage.

Checking For Leaks

1. Detection of the peculiar odor indicates a possible leak. If detected, do not turn on or off any lights or electrical switches on any device or vehicle. Immediately tow vehicle outdoors until leak is located and danger eliminated.
2. Frosting of connections indicates leakage at that point.
3. Normally there should be a slight film of frost on the hex headed plug and boss just above the inlet fuel line connection to the regulator.
4. Never use open flame to check for leakage.
5. Brush a lather of soap on with a soft brush which will indicate the presence of leaks.
6. All rubber hose regardless of length used anywhere in the fuel line or piping system should be very carefully inspected for loose connections or any sign of checking, cracking, etc. At the least sign of injury or deterioration replace immediately.

When Serviced and Checked for Leaks

1. Do not start engine first.
2. Raise hood and allow air to circulate around engine to drive out any possible accumulation of gas.
3. Check fuel in tank with rotary gauge located on tank to make sure fuel supply is available.
4. To start engine open vapor valve *slowly*.
5. Turn on ignition and start engine with choke fully closed and throttle ¼ open.
6. After engine starts open choke completely for normal operation.
7. Operate engine at fast idle until water temperature reaches 125°.
8. Turn *on* liquid valve.
9. Turn *off* vapor valve.

Important Dont's

1. LPG is not intended for any use other than to run the engine.
2. Do not use it as a substitute for solvents to clean parts, seats, cushions, trim, etc.
3. Do not use it in place of compressed air to inflate tires, blow out lines, or any other object or device which can be operated by air.
4. Do not perform any repair work on tanks. Have the necessary tank work performed by qualified firms who service such containers who are informed as to regulations, inspection and test after any repairs are made.
5. Never check fuel tanks without first shutting off engine.

CLARK TRANSMISSIONS

INDEX & LUBE CAPACITY

Model	Speeds	Oil, Pts.	Page
185F	4	4	111
202V, 202VO	5	12	113
204V, 204VO	5	12	113
205V, 205VO	5	12	113
207V, 207VO	5	12	113
230F, 231F	4	10	113
250V, 250VO	5	9	115
251VO	5	9	115
261F	4	12	115
264V, 264VO	5	11½	115
265V, 265VO	5	11½	115
267V, 267VO	5	12	115
268V, 268VO	5	6	115
269V	5	12	115
270V, 270VO	5	20	117
276V, 276VO	5	20	117
290V, 290VO	5	18	117
291V, 291VO	5	18	117
292V, 292VO	5	18	117
300V, 301V	5	12	115
305V, 307V	5	15	115
308V	5	15	115
401V, 406V	5	20	119
407V, 408V	5	20	119
2621V, 2681V	5	11½	115

MODEL 185F

Disassemble, Fig. 1

1. With transmission on bench or repair stand, remove hand brake assembly.
2. Disconnect flexible oil line from clutch release sleeve.
3. Remove clutch release pull back spring.
4. Remove clutch release bearing and sleeve assembly.
5. Remove clutch release levers and shaft.
6. Lock mainshaft by putting gears in two speeds and unscrew companion flange nut.
7. Use suitable puller to remove flange and brake drum.
8. Remove speedometer sleeve and driven gear.
9. Remove mainshaft rear bearing cover.
10. Remove speedometer drive gear.
11. Remove countershaft rear bearing cover.
12. With mainshaft still locked, remove countershaft rear bearing retainer.
13. Remove reverse idler gear shaft lock from rear of case.
14. Remove main drive gear bearing cap.
15. Pull main drive gear out through front of case.
16. Remove mainshaft pilot bearing from pocket of main drive gear.
17. Remove main drive gear bearing retaining nut and press off bearing.
18. Drive mainshaft back until rear bearing is clear of case.
19. Remove clutch hub from front of shaft.
20. Use suitable puller to remove rear bearing from mainshaft.
21. Tilt forward end of mainshaft upward and lift assembly through top of case.
22. Lift loose sliding gear from case.
23. Remove reverse idler gear shaft from rear of case and lift out gear.
24. Move countershaft assembly toward rear until rear bearing is free of case. Then pull off bearing.
25. Tilt forward end of countershaft upward and lift assembly from case. Remove front bearing spacer, which was freed by removal of assembly.
26. Remove countershaft front bearing from inside of case. Do not disturb snap ring and welch plug at front end of counterbore.
27. To remove drive and 3rd speed countershaft gears, remove snap ring and press off gears.
28. To disassemble mainshaft, fasten in vise with forward end up. Then remove snap ring, splined washer and 3rd speed gear, using care not to lose rollers. Remove bearing sleeve, lock pin, and locating washer.

NOTE—Do not remove bell housing from transmission case unless a new one is required. Assemble main drive gear and bearing cap in transmission case and tighten cap screws. Use bearing cap for centering bell housing and bolt housing in place.

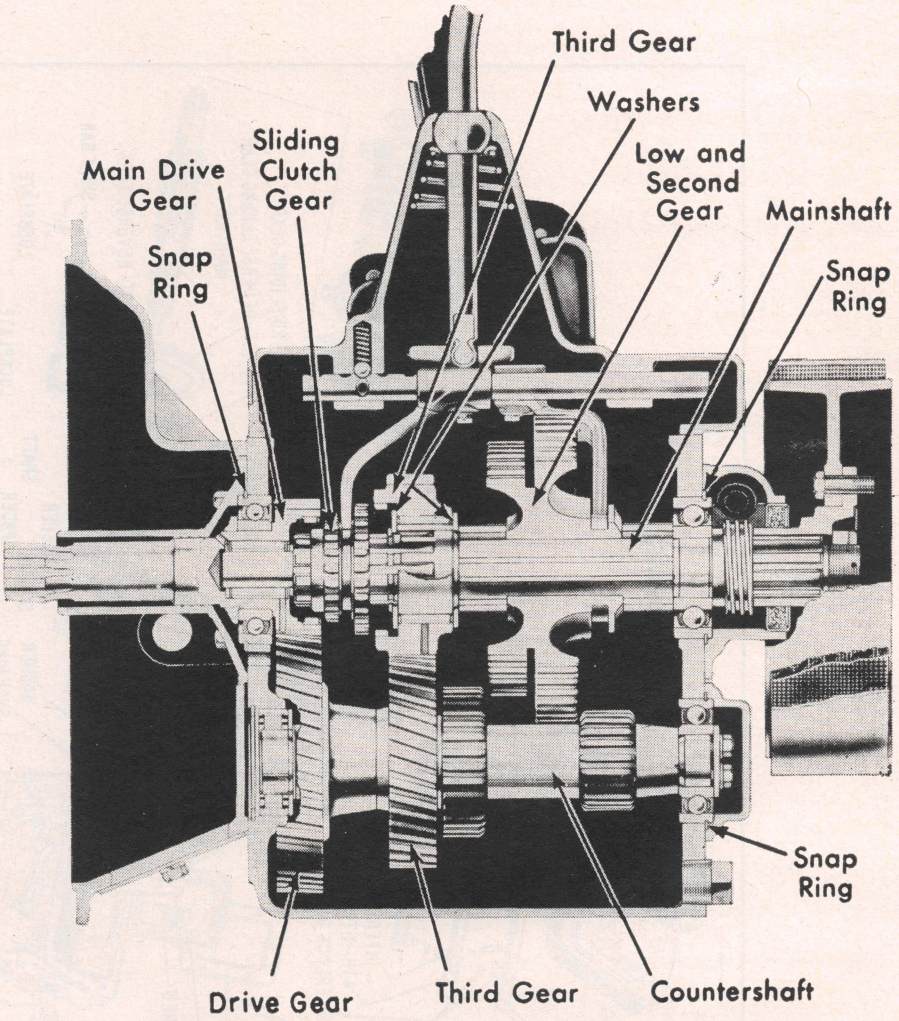

Fig. 1 Clark 185F four speed transmission

Reassemble

Reassembly procedure is accomplished by reversing the order of disassembly. However, observe the following:

1. When installing drive and 3rd speed gears on countershaft, press them on shaft with long hubs of gears facing each other and install snap ring.
2. After installing countershaft assembly, check its operation to see that no binding or end play exists.
3. Install reverse idler gear with slot for shifter fork toward front of case.
4. To assemble mainshaft, place it in vise with forward end up. Then slide 3rd speed locating washer over shaft. Install bearing sleeve with lock pin in place toward front of shaft.
5. Install 3rd speed gear on mainshaft with internal teeth of hub upward. Apply grease to rollers and insert them between shaft and gear.
6. Place splined thrust washer over shaft and install new snap ring in shaft groove. It may be necessary to use a shim or two under snap ring due to matching tolerances.
7. Install clutch hub on mainshaft with small end of hub forward.
8. Place 1st and 2nd speed sliding gears in transmission with shift fork slot facing rear. Then tilt rear end of mainshaft downward and lower into transmission case and slide loose gears on shaft.
9. When installing main drive gear bearing cap, be sure to line up oil holes in cap with holes in case, after first seeing that holes are clean and open.
10. Mainshaft rear oil seal should be installed with open end facing in.
11. When installing clutch release bearing and sleeve, adjust clutch release fingers so that .003" clearance is pro-

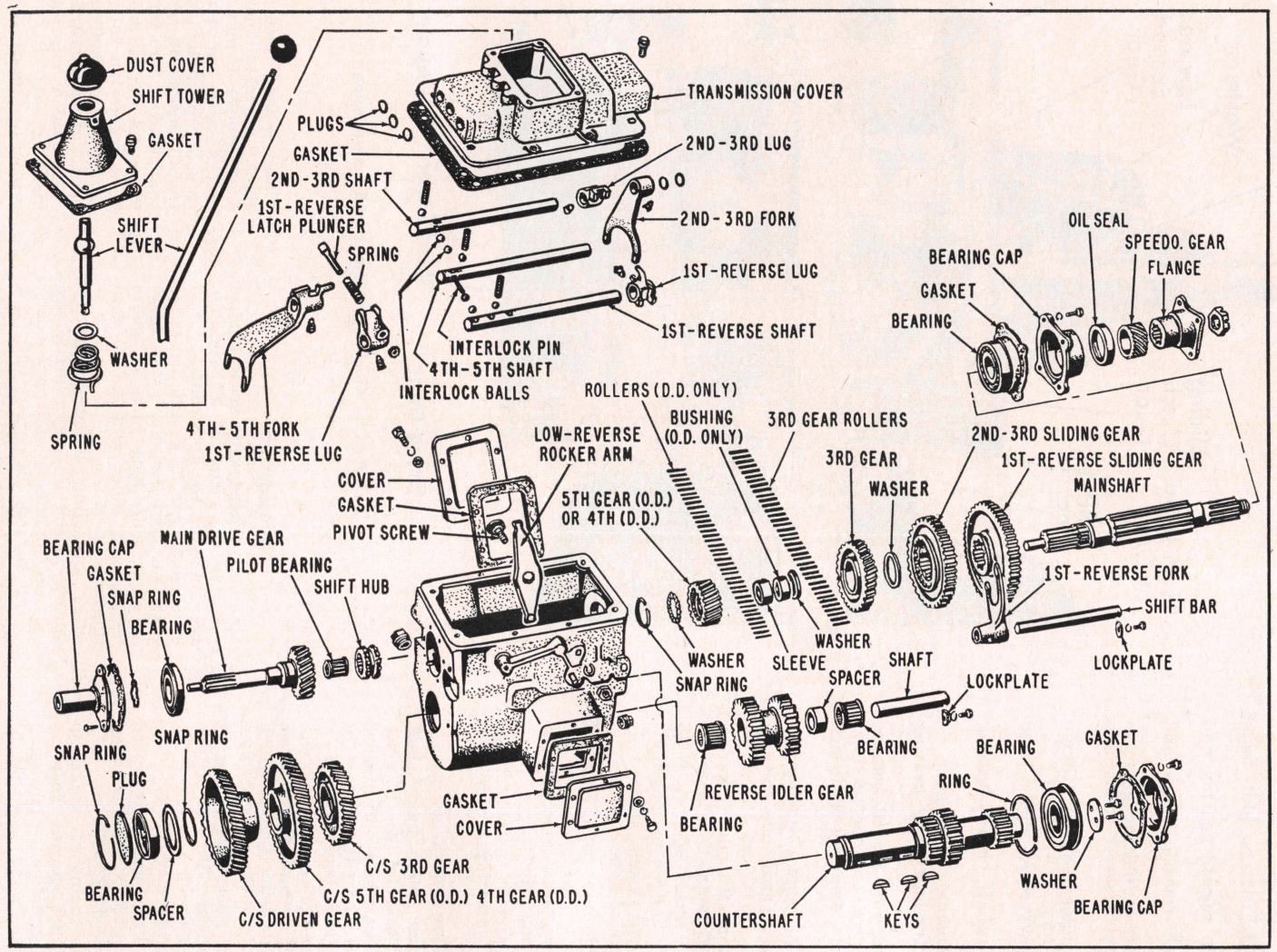

Fig. 2 Clark 200 Series five speed transmissions

vided between sleeve and each finger or a total of .006" between sleeve and both fingers.

12. Install transmission cover by placing gears and shift forks in 2nd speed position.

200 SERIES

Disassemble, Fig. 2

1. Take off cover.
2. Remove hand brake assembly.
3. Lock mainshaft by placing gears in two positions at the same time. Then remove companion flange nut.
4. Remove brake drum.
5. Remove speedometer sleeve and driven gear.
6. Remove mainshaft rear bearing retainer; then remove speedometer drive gear.
7. Remove low and reverse rocker arm pivot bolt and take rocker arm from case.
8. Remove low and reverse fork bar through rear of case and lift out shifting fork.
9. Remove main drive gear bearing retainer cap.
10. Take main drive gear assembly out through front of case.
11. Slide direct and overdrive clutch hub forward and withdraw through front of case.
12. Remove mainshaft rear bearing snap ring. Then drive mainshaft back until rear bearing is free of case.
13. Pull rear bearing off mainshaft with suitable puller.
14. Tilt forward end of mainshaft upward and lift assembly out through top.
15. Remove countershaft rear bearing retainer.
16. Remove bearing retainer washer from rear of countershaft.
17. Remove countershaft rear bearing snap ring. Then move shaft back until rear bearing is out of case so it can be removed with a puller.
18. Tilt forward end of countershaft upward and remove. Then remove front bearing and spacer.
19. Remove reverse idler lock from rear of case.
20. Remove reverse idler gear shaft from rear of case, lift out gear and remove two roller bearings and spacer.
21. Remove sliding gears from mainshaft.
22. Hold splines of mainshaft in vise with soft jaws and spread snap ring, holding 4th speed (or overdrive) gear so it can be slid over splines and off end of shaft.
23. Turn forward steel thrust washer to align internal splines of washer with splineway on shaft and remove 4th speed (or overdrive) gear, bearing bushing, locating washer, 3rd speed roller bearing and gear, and locating washer, in that order.
24. Remove mainshaft pilot bearing.
25. To disassemble countershaft, remove front snap ring and press off gears.

Reassembly Notes

Reassembly of the transmission is accomplished in the reverse order in which it was disassembled. However, observe the following:

1. When assembling mainshaft, clamp it in a vise with front end up. Place 3rd speed gear rear thrust washer on shaft and slip on 3rd speed gear. Apply heavy grease to rollers to hold them in position and insert them between gear and shaft.
2. Place 4th speed (or overdrive) gear rear thrust washer in position. Slide bearing sleeve over shaft, being sure inner race locating pin is in position and engaging splineway in shaft. Place 4th speed (or overdrive) gear in position and then the front splined thrust washer, pushing it down so that a new snap ring can be installed.
3. Install 3rd speed sliding gear on mainshaft with internal teeth toward front end and install low and reverse sliding gear with slot for shifter fork toward front end of shaft. Install sliding clutch hub on mainshaft.
4. When installing main drive gear front bearing cap, place oil return hole at bottom to line up with hole in case. Be sure these holes are clear of any obstruction.

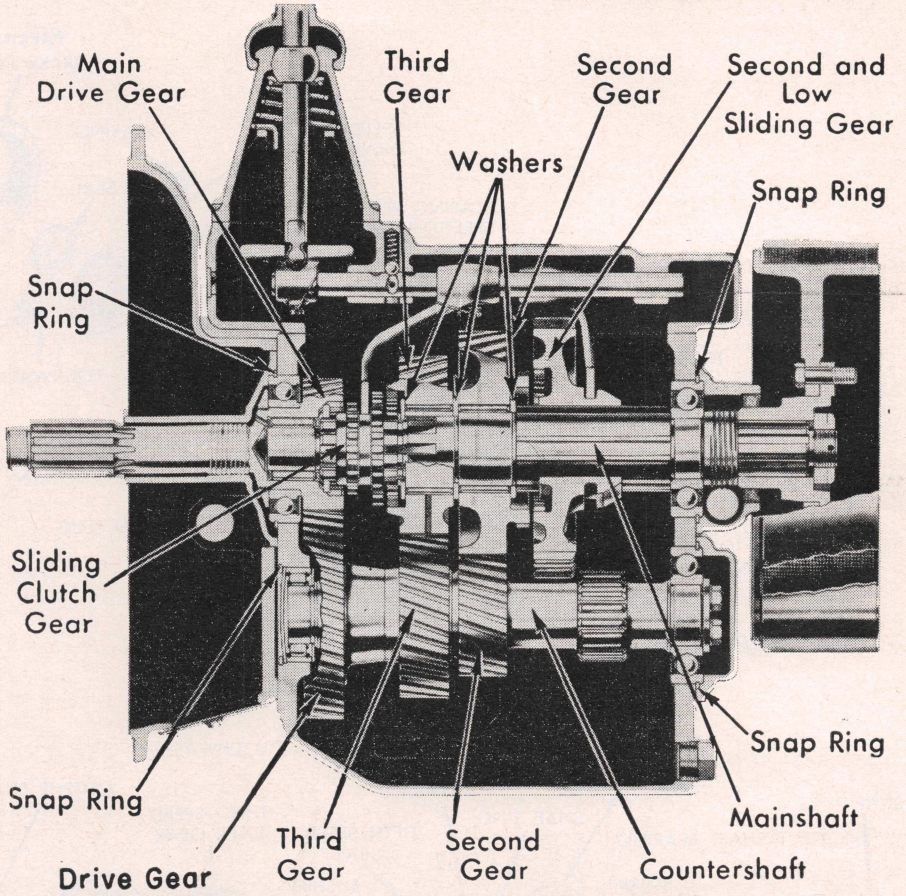

Fig. 3 Clark 230 Series four speed transmission

230 SERIES

Disassemble, Fig. 3

Shift the transmission into second speed and take off the cover and shifter assembly. Remove the speedometer driven gear. Disconnect the hand brake band and linkage from the transmission. Lock the transmission in two gears to prevent the mainshaft from turning and unscrew the nut from the rear of the mainshaft. Pull off the universal flange and brake drum.

Remove the bell housing and the main drive gear bearing retainer, then pull the gear assembly out through the front. Slip the sliding clutch gear off the mainshaft and withdraw it through the front. Disconnect the mainshaft rear bearing retainer and push the shaft to the rear far enough to permit the removal of the rear bearing and speedometer drive gear. Tilt the front end of the mainshaft upward and lift the assembly out through the top.

Take off the countershaft rear bearing cap and remove the two screws and washer from the rear bearing. Push the countershaft far enough to the rear to permit the rear bearing to be removed. Tilt the front end of the countershaft upward and lift the assembly out of the transmission case. Remove the lock, tap the reverse idler shaft out rearward and lift out the gear.

To disassemble the mainshaft, slip the sliding gear from the shaft. Remove the snap ring from the front of the third speed gear. Rotate the front thrust washer until its teeth align with the mainshaft splines and take off the gears, together with the roller bearings, inner race, and washers.

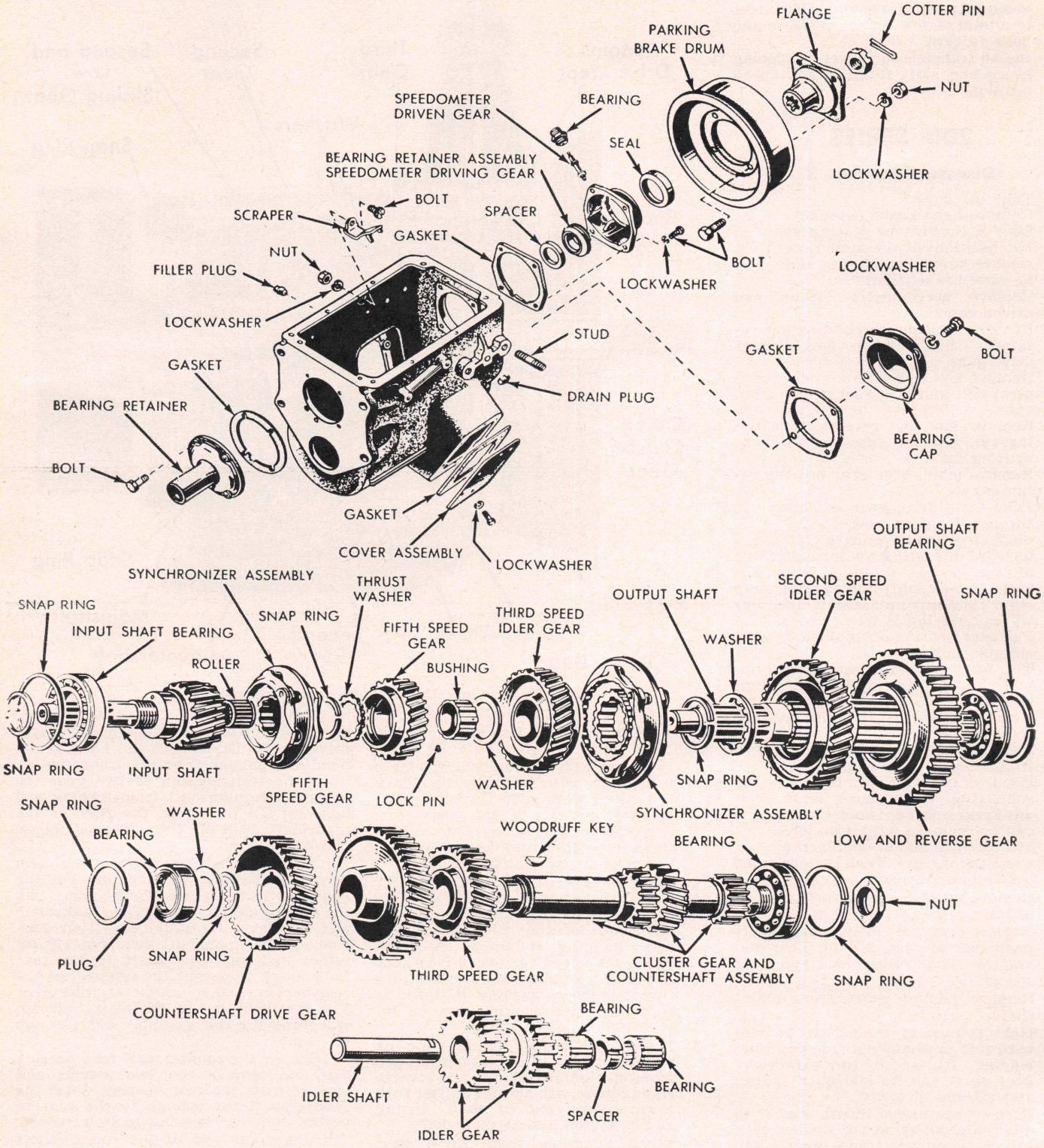

Fig. 4 Clark 250 Series Five Speed Synchronized Transmissions

To assemble, clamp the shaft in a vise with the front end up and slip on the second speed gear rear thrust washer. Assemble the second speed gear over the shaft and insert the rollers between the gear and the shaft, using grease to hold them in place. Install the third speed gear rear thrust washer and the inner race with the locating pin engaging mainshaft spline. Assemble the third speed gear over the race and insert the rollers, using grease to hold them in place. Slip on the front thrust washer and hold it down in order to install the snap ring. Lubricate the mainshaft splines and slip the sliding gear on the shaft with its internal teeth facing the front. Assemble the sliding clutch gear on the front of the shaft with the larger gear to the rear.

If necessary to disassemble the cover,

drive the expansion plugs out of the cover. With all rails in the neutral position, remove the set screws from the shift forks and push the rails out toward the front, holding a hand over the lock ball holes to prevent them from flying out. As each rail is removed, tag it to be sure that assembly is made correctly. Remove the expansion plug from the side of the cover and tilt the cover on its side to allow the interlock plungers to drop out. Disassemble the reverse shifter fork assembly.

Assemble in the reverse order after lubricating all balls, springs and interlock plungers. When assembling the reverse shifter lug plunger, be sure it works freely and turn the adjusting nut until the plunger is flush with the face of the slot for the end of the shift lever.

Assemble

Insert the reverse idler with the larger gear toward the rear and tap in the shaft. Assemble the countrshaft front bearing, its retainer and snap ring. Place the countershaft assembly in the case and install the rear bearing, the two retaining screws, washer and the retainer cap.

Position the mainshaft assembly in the case and replace the rear bearing, speedometer drive gear and rear bearing retainer. Lubricate the mainshaft pilot bearing, place it in position in the main drive gear and install the drive gear assembly through the front. Fasten the drive gear bearing retainer securely in position and replace the bell housing.

Complete the assembly by replacing the universal flange, brake drum, hand brake mechanism, transmission cover and speedometer driven gear.

250 SERIES

Five Speed Synchronized Units, Figs. 4 and 5

When assembling the transmission, use new snap rings, cotter pins, gaskets and oil seals. Lubricate each moving part as it is being assembled, and coat all bushings with a light film of petrolatum before installation.

Assembling Mainshaft

1. Clamp mainshaft in vise with front end up and install 3rd gear with internal teeth down and slip on thrust washer.
2. Place lock pin in 4th gear bushing (5th on O.D. units) and position bushing on shaft with lock pin toward upper end. Install gear on bushing with hub upward. Install thrust washer and snap ring.
3. Check end play of 4th gear. If not between .008-.012" replace thrust washer with one of a size that will provide correct end play. Thrust washers are available in four thicknesses ranging from .111" to .125".
4. Remove assembly from vise and install 2nd gear with internal teeth toward front. Install low-reverse gear with fork slot toward front.

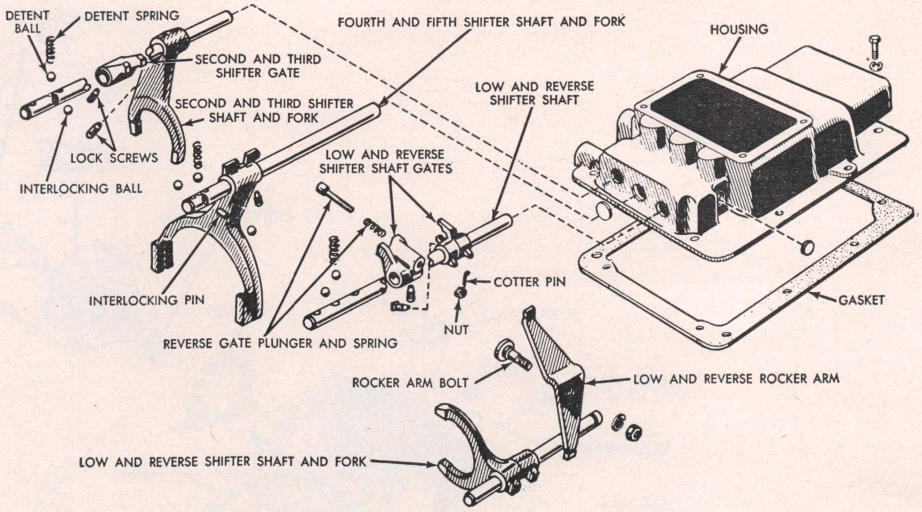

Fig. 5 Clark 250 Series gearshift housing

Assemble Transmission

1. Install countershaft front bearing snap ring in case, then install new expansion plug in countershaft bore in case. Be sure to expand plug enough to prevent oil leakage.
2. Install countershaft front bearing in case. Install thrust washer on front end of shaft. Tip rear end of countershaft down and lower into case. Push shaft forward and insert it in front bearing.
3. Place rear bearing snap ring on bearing. Position bearing on countershaft with snap ring toward rear and install bearing on shaft.
4. Install reverse idler gear assembly in case with smaller gear toward rear of case. Drive reverse idler shaft into case until slot in shaft is flush with case. Install retainer in slot and secure with lock washer and bolt.
5. Tilt rear of mainshaft downward, inserting end of shaft through rear bore in case. Then lower front end of shaft until it is in line with pilot bearing opening and move assembly forward into position.
6. Place synchronizer on shaft with longer hub forward.
7. Install rear bearing on mainshaft with snap ring groove toward rear. Install snap ring on bearing and tap bearing onto mainshaft until snap ring is seated against case. Install speedometer drive gear spacer and gear on rear of shaft and pilot bearing on front end.
8. Install main drive gear and bearing in case. Tap front end of shaft with soft hammer until snap ring in bearing is seated against case. Position new gasket of proper thickness on case and install bearing retainer. Be sure that oil holes in retainer and gasket are aligned with hole in case.
9. Place countershaft rear bearing cap and gasket on case and install lock washers and bolts.
10. Install mainshaft rear bearing retainer with new seal and gasket.
11. Install 1st-reverse shift fork in case with fork engaged in sliding gear groove. Insert shift rail through hole in rear of case and through fork. Drive rail into case until edge of lock slot is flush with case. Install rail lock plate and secure with capscrew.
12. Place 1st-reverse rocker arm in case and install pivot bolt and nut.
13. Place new gasket on top of case and with gears in neutral, install gearshift housing, being sure shift forks engage slots in gears.
14. Install emergency brake and U-joint flange. Shift transmission into gear and tighten flange nut. If cotter pin holes do not line up, always tighten nut (not loosen) until cotter pin can be inserted.

260, 2600 & 300 SERIES

4 and 5 Speed Synchronized Units, Figs. 6 and 7

When assembling the transmission, use new snap rings, cotter pins, gaskets and oil seals. Lubricate each moving part as it is being assembled, and coat all bushings with a light film of petrolatum before installation.

Assembling Mainshaft

1. Clamp mainshaft in vise with soft jaws with front end up.
2. Position 2nd speed gear on mainshaft with internal teeth facing up.
3. Place 2nd gear retainer washer in position on shaft.
4. Install 2nd gear retaining ring in groove of shaft over locating ring.

Four Speed Models

1. Place 2nd speed synchronizer on mainshaft with counterbore in shift hub down.
2. Position synchronizer support over shaft above synchronizer and install locating washer.
3. With lock pin in place in fluted bushing, install fluted bushing on shaft with lock pin toward upper end. Tap bushing into place.

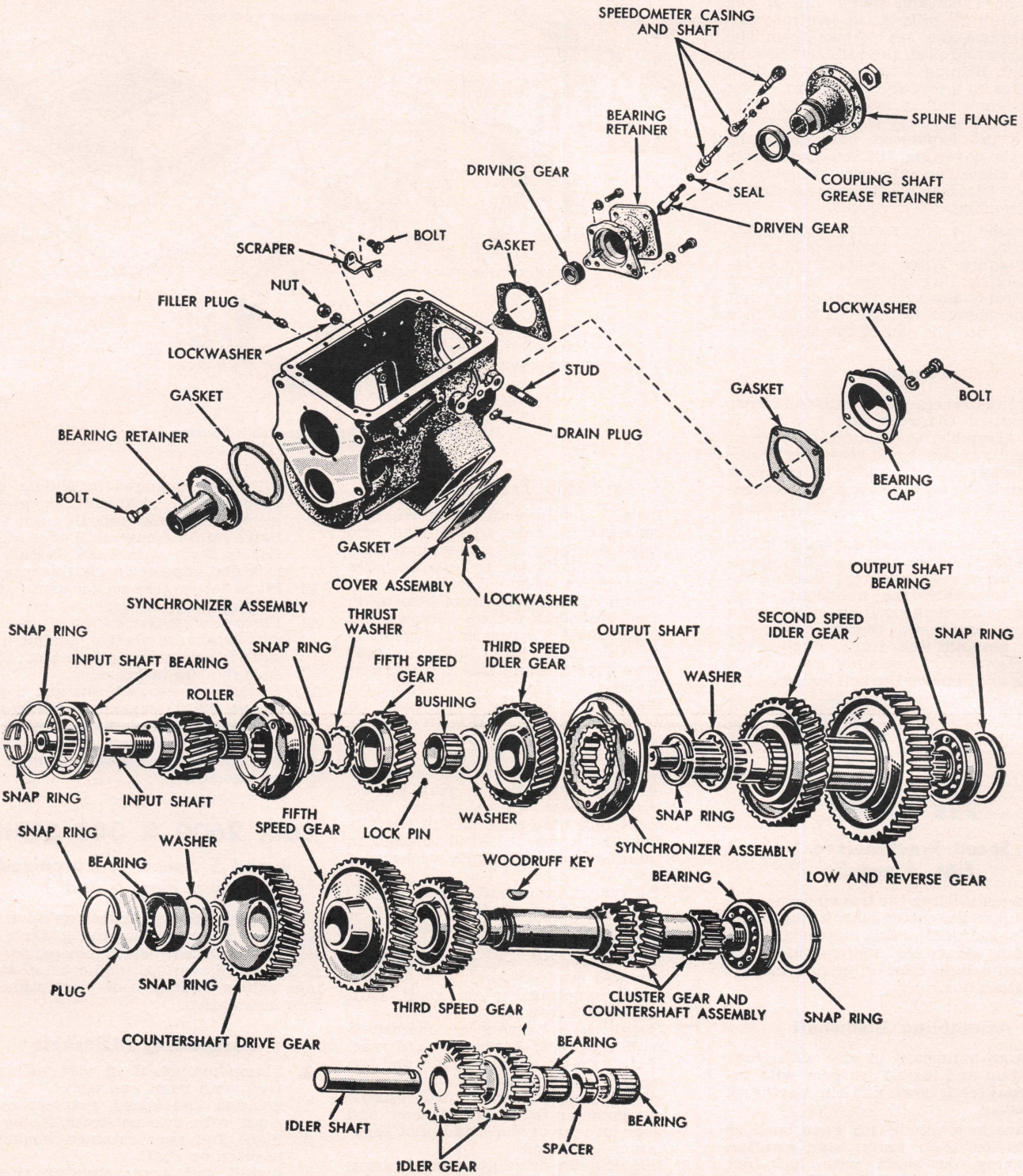

Fig. 6 Clark 260 and 300 Series four and five speed synchronized transmissions

4. Position 3rd speed gear on mainshaft with toothed hub up.
5. Install 3rd speed gear retaining washer on mainshaft, rotating gear so external teeth on washer mesh with internal teeth of gear.
6. Install snap ring on mainshaft, making sure it is securely locked in place.
7. Check end play on 3rd gear, which must be .004" to .012". Retaining washers of various thicknesses are available to obtain required end play.
8. Remove mainshaft from vise and install 3rd and 4th synchronizer assembly with lip on shift hub toward front.
9. Install 1st and reverse gear on shaft with fork slot toward front.

Five Speed Models

1. Referring to Figs. 6 and 8, place 2nd and 3rd speed synchronizer on mainshaft with counterbore in shift hub down.
2. Position 3rd speed gear on shaft with toothed hub down.
3. Install 3rd speed gear locating washer on shaft over 3rd speed gear.

4. With lock pin in place in fluted bushing, install fluted bushing on mainshaft with lock pin toward upper end. Tap bushing into position.
5. Position 4th speed gear on mainshaft with toothed hub up.
6. Install 4th speed gear retaining washer on splines of mainshaft, rotating gear to align external teeth of washer with internal teeth of gear so washer will drop into place.
7. Install snap ring on shaft so it is securely locked in groove. Check end play on 4th gear, which should be .005" to .012". Retaining washers are available in various thicknesses to obtain required end play.
8. Remove assembly from vise and install 4th and 5th speed synchronizer with lip on shift hub toward the front.
9. Install 1st and reverse speed gear with fork slot toward front.

Assemble Transmission

Note: If countershaft front bearing was previously removed and not reinstalled, install bearing as follows, using care not to damage the bearing during installation:

1. Using a suitable sleeve and an arbor press or hammer, press bearing in transmission case from clutch housing end of case. Open end of bearing goes toward rear of case.
2. Press bearing .007" below front face of case.
3. Tap rear end of countershaft down and lower into transmission case, running rear of countershaft through opening for bearing in rear of case far enough so front countershaft can be lowered into position. Push countershaft forward into position in front bearing.
4. Install countershaft rear bearing, being sure snap ring is in groove in outer race of bearing. Press bearing into place on shaft with snap ring toward rear. Press bearing into case until snap ring contacts case.
5. Install snap ring in groove in countershaft to retain bearing, being sure it is well seated in groove.
6. Insert one reverse idler bearing in reverse idler gear; then install bearing spacer and the second bearing in gear.
7. Install reverse idler gear in case with bevel on gear toward rear of case.
8. Insert reverse idler shaft through opening in rear of case and into idler gear. Make sure groove for retainer lock in rear of shaft is at bottom of shaft. Drive shaft in until inner edge of groove is flush with transmission case. Install retainer lock and lock screw.
9. Install mainshaft assembly in case by tilting rear end down and lowering into and through opening in rear of case, which is provided for rear bearing. Lower front end in line with pilot bearing opening. Move mainshaft forward into position, lifting assembly so 2nd gear will clear countershaft oil slinger.
10. Position mainshaft rear bearing over end of shaft with snap ring in outer race of bearing facing the rear.
11. Using a suitable sleeve and hammer, drive bearing on mainshaft and into case until snap ring on bearing contacts case.
12. Slide pilot bearing on front end of mainshaft.
13. Postion main drive gear and bearing into opening in front of case so that drive gear engages and meshes with countershaft gear and snap ring on bearing contacts case. It may be necessary to use a suitable sleeve and hammer to drive gear and bearing into position.
14. Install a new gasket on main drive gear bearing cap. Install bearing cap on case and tighten screws securely. *Oil return hole in bearing cap must line up with oil hole in transmission case.*
15. Install countershaft rear bearing cap and new gasket.
16. Install spacer washer and speedometer drive gear on mainshaft.
17. Install mainshaft rear bearing cap and oil seal and new gasket.
18. Install 2nd speed gear oil scraper to transmission case.
19. Install brake drum and flange.
20. Lock transmission in two speeds at once and install companion flange nut, torquing it to 250 ft. lbs. Then advance nut to nearest cotter pin hole and install cotter pin.
21. Install shift bar housing with new gasket, being sure forks engage slots and rings in gears.
22. Install control cover and new gasket on shift bar housing.
23. Make sure transmission is in neutral by holding brake drum and turning main drive gear.
24. Install speedometer driven gear and adapter, hand brake parts, P.T.O. covers, and clutch housing.

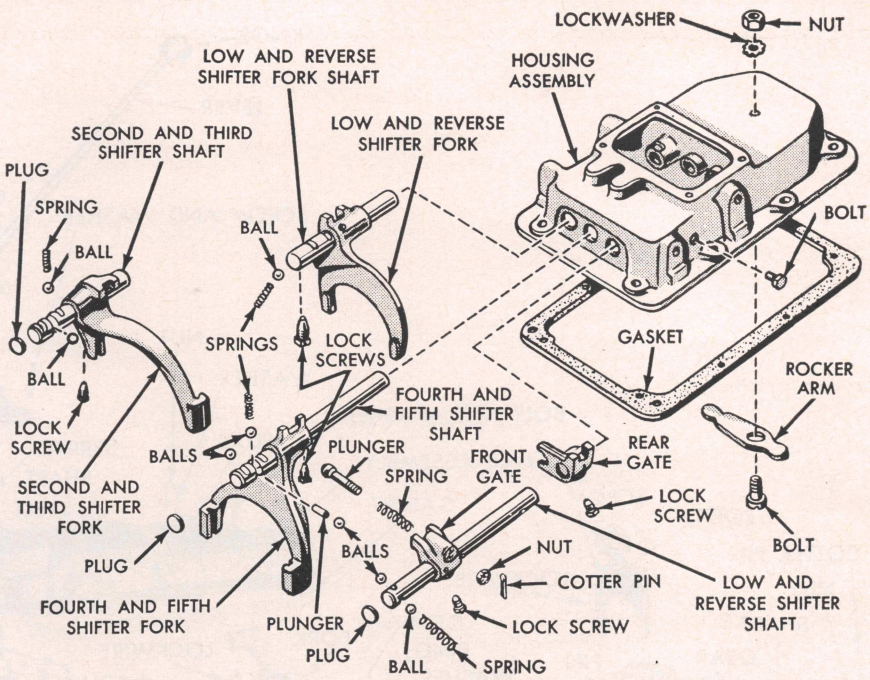

Fig. 7 Clark 260 and 300 Series gearshift housing

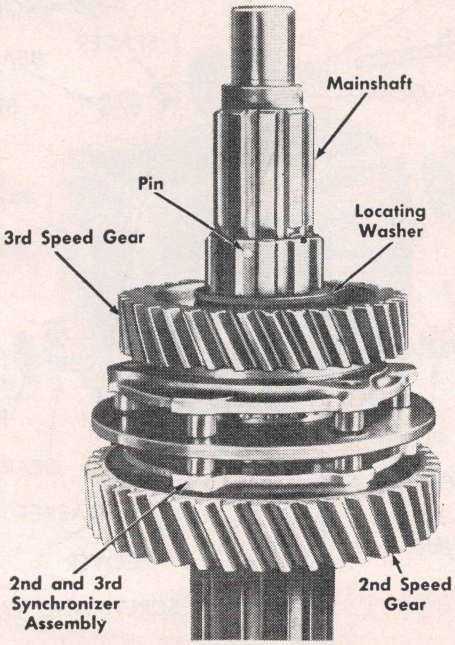

Fig. 8 Clark 260 and 300 Series five speed mainshaft assembly with fourth speed gear removed

270 & 290 SERIES

Five Speed Units, Fig. 9

When disassembled, wash all parts and inspect for wear, twisted shafts, galling, chipped gear teeth and other damage. Slight burrs can be removed by stoning. Install new gaskets, snap rings and shims. Replace all oil seals when unit is disassembled.

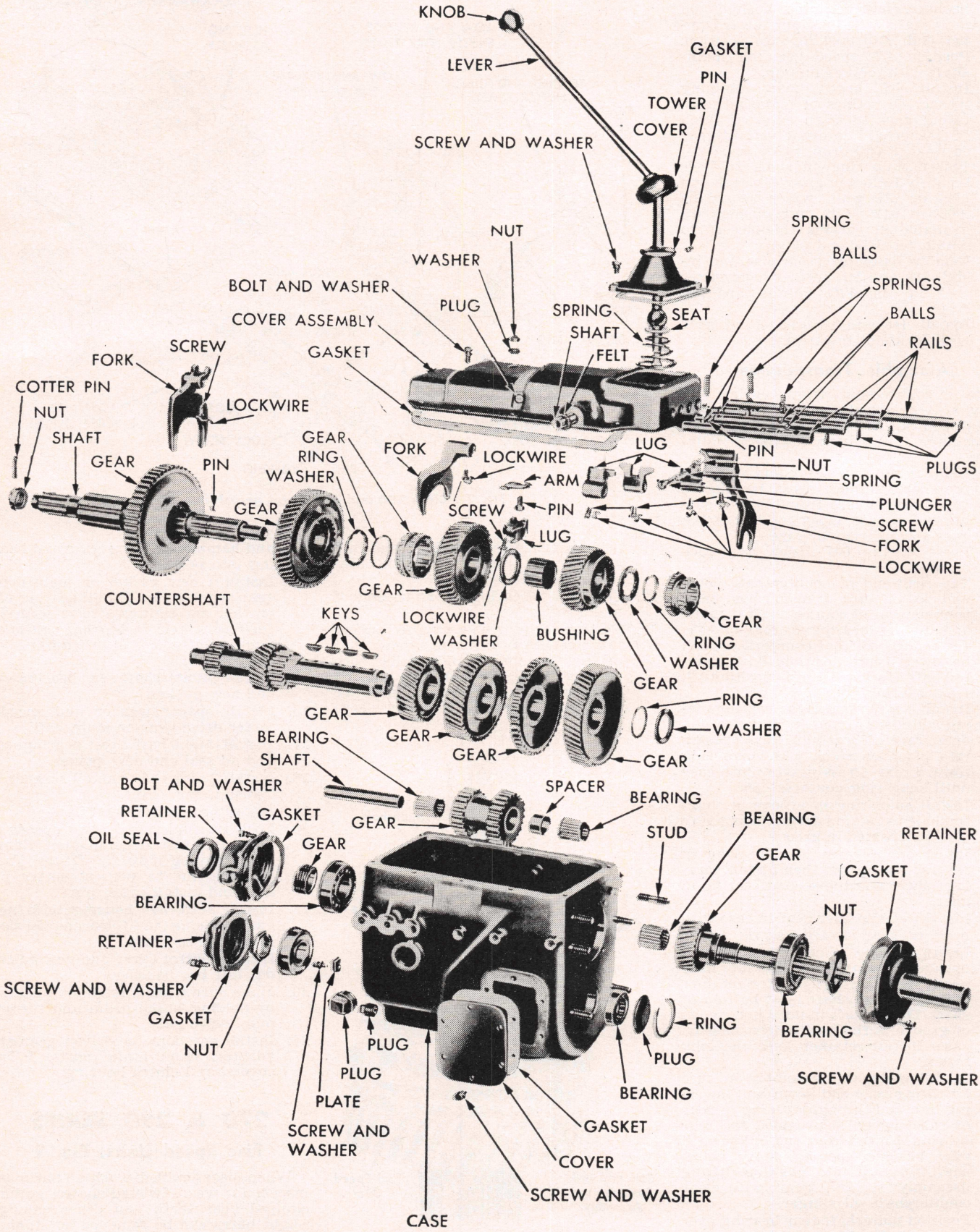

Fig. 9 Clark 270 and 290 Series five speed transmissions

Assemble Mainshaft

1. Clamp mainshaft in vise with front end up and place 2nd gear on shaft with oil catchers up. Slip 2nd gear washer on shaft. Install snap ring in groove over washer.
2. Install 2nd-3rd sliding gear on shaft. Place 3rd gear on shaft with toothed hub downward. Drop 4th gear locating washer on shaft. Then with lock pin in place in fluted bushing, install bushing on shaft with lock pin toward upper end.
3. Place 4th gear on shaft with toothed hub upward. Drop retaining washer on shaft. Then install snap ring on shaft so it is locked in groove.
4. Remove assembly from vise and install sliding gears on shaft.

Assemble Transmission

1. Install countershaft front bearing. Position spacer on forward end of shaft. Tip rear end of countershaft down and lower into case. Run rear of countershaft through bearing opening in rear of case far enough so that front of shaft may be lowered into position. Push countershaft forward into position.
2. Install bearing on rear of countershaft with snap ring groove toward rear.
3. Install reverse idler gear assembly with chamfered teeth toward rear of case. Drive shaft in case until forward face of slot in shaft is flush with rear of case and slot is lined up to permit installation of lock plate. Secure lock plate with capscrew and washer.
4. Tilt rear end of mainshaft assembly down and lower it into and through opening in rear of case. Lower front end in line with pilot bearing opening and move assembly forward into position.
5. Assemble rear bearing over end of mainshaft with snap ring in outer race facing toward rear. Install pilot bearing on mainshaft.
6. Install main drive gear and bearing assembly and install bearing cap and gasket. Be sure oil hole in cap is lined up with oil hole in case, and be sure passage is open and clear.

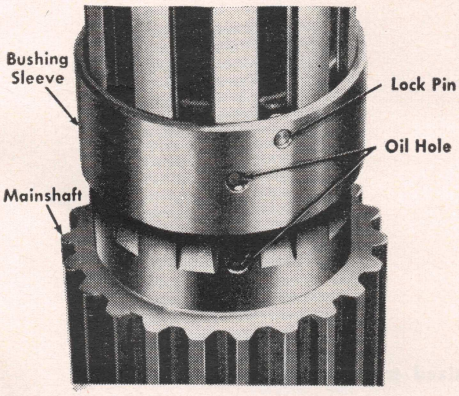

Fig. 11 Clark 400 Series. Installing mainshaft second gear bushing sleeve

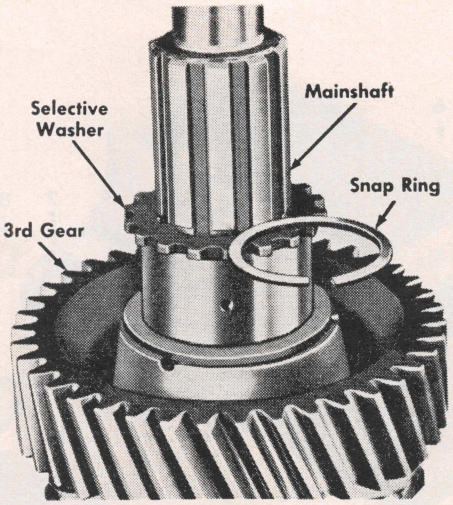

Fig. 12 Clark 400 Series. Selecting fourth gear variable thickness retaining washer

Clutch retainer bearing return spring clip should be installed under head of screw in assembly of bearing cap.

7. Lock gears in two speeds at same time. Install countershaft rear bearing retaining nut, draw it up tight and stake it in place. Install countershaft rear bearing cap and gasket.
8. Install speedometer gear on mainshaft. Then install rear bearing cap and gasket.
9. Install brake drum and companion flange. Draw flange nut up tight and lock wih cotter pin.
10. Assemble gearshift housing, being sure shift forks engage slots in gears.

400 SERIES

Five Speed Synchronized Units

Because of the increasingly higher engine speeds and extended periods of high gear operation, positive lubrication of the mainshaft is provided in this transmission in the form of a mainshaft pump that supplies mainshaft gear bushings and bearings with adequate oil at all times.

The pump is composed of a rotor which surrounds and is driven by the input shaft, a single free-floating vane confined in the rotor, and a stationary housing provided by the input shaft bearing cap which forms an eccentric bore for the single vane to contact.

Assemble Subassemblies

When assembling the transmission, use new snap rings, cotter pins, gaskets and oil seals. Lubricate each moving part as it is being installed. Coat all bushings with a light coat of petrolatum before installation. Refer to Fig. 10.

Assemble Mainshaft

1. Clamp mainshaft in a soft-jawed vise with front end up.
2. Install mainshaft 2nd gear bushing sleeve and lock pin. Pin must be installed toward pilot end of mainshaft with oil hole in sleeve lined up with oil hole in shaft, Fig. 11.
3. To insure a proper tight stack-up between the 2nd gear bushing sleeve, selective retaining washer and snap ring, proceed as follows:
   a. Before 2nd gear is installed on bushing sleeve, place retaining washer on shaft and hold down securely on bushing sleeve.
   b. While holding snap ring parallel to retaining washer, slip snap ring into ring groove in mainshaft. Select variable thickness retaining washers until one is selected that will allow snap ring to fit securely in groove, Fig. 12.
   c. Remove selected washer and install 2nd gear and bushing over bushing sleeve.
   d. Place selected washer in position; then install snap ring into shaft groove. End play on 2nd gear must be .004″ to .010″.
4. Place 2nd and 3rd synchronizer with large end of hub toward rear on splines of mainshaft and drop into position. Install 3rd speed gear locating thrust washer on shaft.
5. Position 3rd gear and bushing over mainshaft with toothed hub down and drop into place.
6. Position 4th gear locating washer on shaft.
7. With lock pin in place in 4th gear bushing sleeve, install bushing sleeve on shaft with lock pin toward pilot or front end of shaft. It may be necessary to use a suitable sleeve and hammer to properly install sleeve. *Oil hole in sleeve must line up with oil hole in mainshaft.*
8. To insure proper stack-up between 4th gear locating washer, bushing sleeve, selective retainer washer and snap ring, follow the same procedure outlined for the 2nd gear parts.
9. Install 4th and 5th speed synchronizer with large end of hub toward rear.
10. Press pilot bearing on front end of mainshaft. Remove assembly from press and cover it with clean cloth until ready for installation.

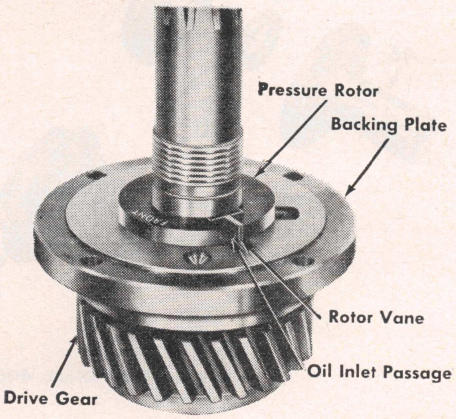

Fig. 13 Clark 400 Series. Oil pressure rotor installed

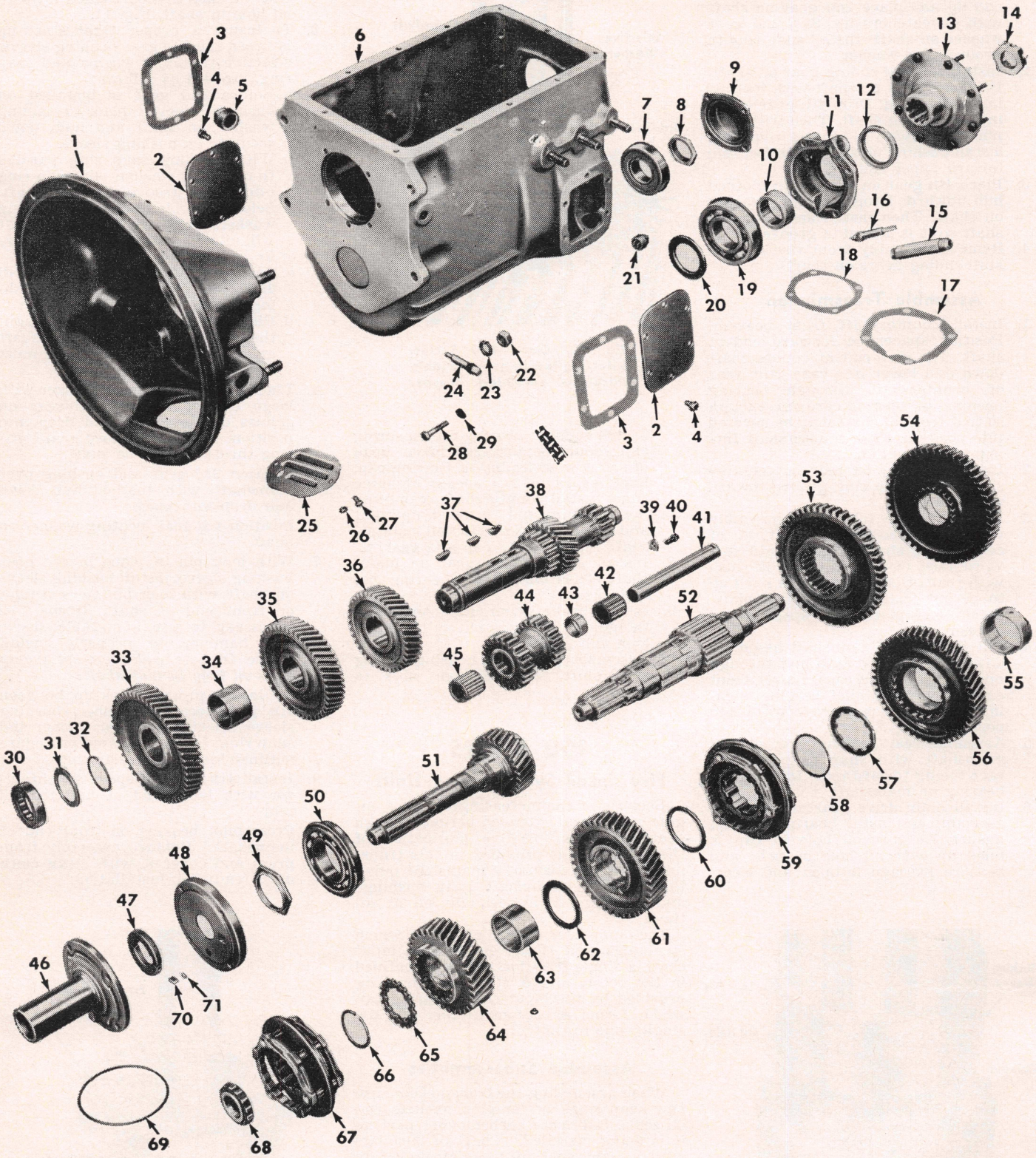

Fig. 10 Clark 400 Series pressure lubricated five speed synchronized transmissions

Assemble Transmission

1. Install countershaft front bearing in bore of case, applying pressure on outer race of bearing only.
2. Place countershaft front bearing spacer in position on front end of countershaft.
3. Tip rear of countershaft down and lower assembly into transmission case, running rear end of countershaft through rear bearing opening in case far enough to permit front of countershaft to be lowered into place. Push countershaft forward into proper position.
4. Using hammer and suitable installer sleeve, install countershaft rear bearing. Install rear bearing retainer nut loosely.
5. Insert two roller bearings, separated by spacer, into hub of reverse idler gear.
6. Lower reverse idler gear into position in case. Gear with chamfered teeth goes toward rear of case.
7. Insert reverse idler shaft through rear of case, through reverse idler gear and into forward support boss. The shaft should be driven in until forward face of slot in shaft is flush with rear face of case and slot lined up to permit installation of locking plate.
8. Install reverse idler shaft lock on idler shaft, engaging lock with slot in shaft. Secure lock to shaft with cap screw.
9. Position mainshaft 1st gear and bushing and reverse gear in case.
10. Install mainshaft in case by tilting rear end of assembly down and lowering into and through reverse gear, 1st gear, and opening in rear of case. Lower front end of shaft in line with pilot bearing opening in case and move assembly forward in proper position.
11. Install pressure rotor backing plate on main drive gear.
12. Position pressure rotor drive pin on drive gear.
13. Install pressure rotor on drive gear, with side of rotor marked "Front" toward front of transmission away from backing plate. With rotor drive pin at top and vane slot of rotor at bottom, see that oil inlet hole in rotor is on left side of rotor vane slot, Fig. 13.
14. Position new O-ring seal in groove in pressure rotor backing plate.
15. Install bearing cap on main drive gear, aligning oil inlet and outlet holes between rotor backing plate and drive gear bearing cap. Align word "Top" on cap with "Top" on backing plate.
16. Position main drive gear, bearing cap, pressure rotor, and new gasket into case so the main drive gear engages and meshes with countershaft drive gear. *Oil inlet and outlet holes must line up with oil holes in transmission case and word "Top" on bearing cap toward top of case.* Install four cap screws and tighten securely.
17. Install mainshaft 1st gear thrust washer; then, using a suitable installer sleeve and hammer, install mainshaft rear bearing.
18. Lock transmission gears in two speeds at same time and tighten countershaft rear bearing nut. Draw nut up tight and stake in position.
19. Position speedometer gear on mainshaft.
20. If previously removed, install new mainshaft rear bearing cap oil seal, using a suitable sleeve and hammer. Lip of seal goes toward front of bearing cap.
21. Install mainshaft and countershaft rear bearing caps and new gaskets.
22. With transmission still "locked up", install hand brake companion flange and retainer nut.
23. Install speedometer driven gear and adapter, P.T.O. covers and drain plugs.

Fig. 10

1 Clutch Housing
2 P.T.O. Cover
3 Gasket
4 Cap Screw
5 Filler Plug
6 Transmission Case
7 Countershaft Rear Bearing
8 Rear Bearing Retainer Nut
9 Rear Bearing Cap
10 Speedometer Drive Gear
11 Rear Bearing Cap
12 Rear Bearing Cap Oil Seal
13 Hand Brake Companion Flange
14 Companion Flange Nut
15 Driven Gear Adapter
16 Speedometer Driven Gear
17 Gasket
18 Gasket
19 Mainshaft Rear Bearing
20 Mainshaft 1st Gear Thrust Washer
21 Drain Plug
22 Clutch Housing Stud Nut
23 Lock Washer
24 Oil Gallery Magnetic Plug
25 Clutch Housing Cover
26 Lock Washer
27 Cover Screw
28 Bearing Cap Attaching Screw
29 Lock Washer
30 Countershaft Front Bearing
31 Front Bearing Spacer
32 Countershaft Drive Gear Retainer Ring
33 Countershaft Drive Gear
34 Drive Gear Spacer
35 Countershaft 4th Gear
36 Countershaft 3rd Gear
37 Countershaft Gear Keys
38 Countershaft
39 Reverse Idler Shaft Lock
40 Lock Screw
41 Reverse Idler Shaft
42 Reverse Idler Gear Bearing
43 Bearing Spacer
44 Reverse Idler Gear
45 Reverse Idler Gear Bearing
46 Main Drive Gear Bearing Cap
47 Pressure Rotor
48 Rotor Backing Plate
49 Bearing Retainer Nut
50 Main Drive Gear Bearing
51 Main Drive Gear
52 Mainshaft
53 Mainshaft Reverse Gear
54 Mainshaft 1st Gear and Bushing Assy.
55 Mainshaft 2nd Gear Bushing Sleeve
56 Mainshaft 2nd Gear and Bushing Assy.
57 2nd Gear Retainer Washer - Selective
58 2nd Gear Retainer Snap Ring
59 2nd and 3rd Synchronizer Assy.
60 Mainshaft 3rd Gear Thrust Washer
61 Mainshaft 3rd Gear and Bushing Assy.
62 Mainshaft 4th Gear Locating Washer
63 Mainshaft 4th Gear Bushing Sleeve
64 Mainshaft 4th Gear and Bushing Assy.
65 4th Gear Retainer Washer - Selective
66 4th Gear Retainer Snap Ring
67 4th and 5th Synchronizer Assy.
68 Mainshaft Pilot Bearing
69 Main Drive Gear O-Ring
70 Rotor Vane
71 Rotor Drive Pin
72 Bushing Sleeve Pin

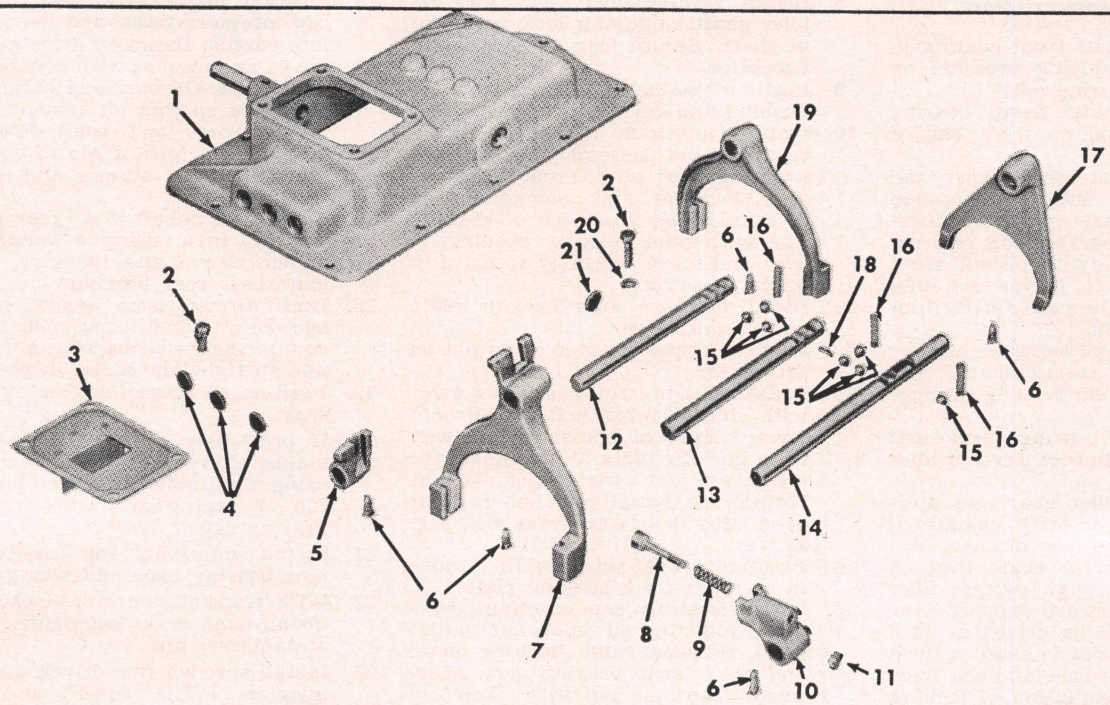

1 Shift Bar Housing
2 Housing to Case Attaching Bolts
3 Control Top Oil Baffle
4 Shift Rod Hole Welch Plugs
5 2nd and 3rd Shift Lug
6 Lock Screws
7 1st and Reverse Shift Fork
8 Latch Plunger
9 Latch Plunger Spring
10 1st and Reverse Shift Lug
11 Latch Plunger Adjusting Nut
12 2nd and 3rd Shift Rod
13 4th and 5th Shift Rod
14 1st and Reverse Shift Rod
15 Mesh Lock and Interlock Balls
16 Mesh Lock Springs
17 4th and 5th Shift Fork
18 Interlock Cross Pin
19 2nd and 3rd Shift Fork
20 Lock Washer
21 Interlock Hole Welch Plug

Fig. 14 Clark 400 Series gearshift housing

24. Install pressure rotor oil gallery magnetic plug in case.
25. Install clutch housing, shift bar housing, control top oil baffle and control top assembly, Fig. 14.
26. Make sure transmission is in neutral by holding brake drum and turning main drive gear.
27. Install hand brake parts.

FULLER TRANSMISSIONS

INDEX & LUBE CAPACITY

Model	Speeds	Oil, Pts.	Page
3-65 Series	3 Aux.	13	134
2-92 Series	2 Aux.	12	
3-92 Series	3 Aux.	12	
4M-112	4 Aux.	21	
5A-33, 330	5	11	130
5B-33, 330	5	11	130
5F-33	5	11	130
5A-43, 430	5	16	130
5A-62, 620	5	18	130
5A-65, 650	5	24	130
5C-65, 650	5	24	130
5C-72, 720	5	24	130
5CA-720	5	24	130
5H-74, 5HA-74	5	12	130
5W-74	5	24	130
5WA-74	5	24	130
5A-1120	5	29	130
10A-1120	10	35	132
10B-1120	10	35	132
10CB-65, 650	10	31	
R45, R46	8	19	123
R63, R630D	10	30	123
R95C, R950C	10	32	123
R96, R960	10	33	123

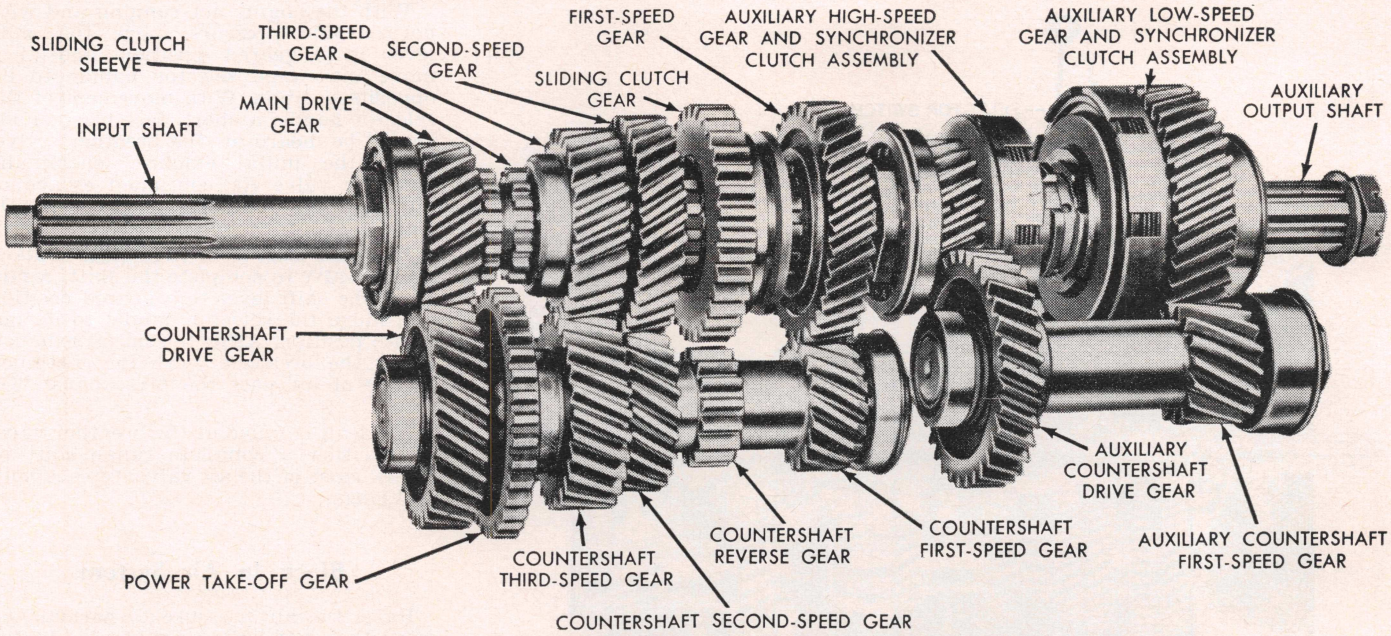

Fig. 3 Fuller Road Ranger eight speed transmission

ROAD RANGER

8 and 10 Speed Units

These transmissions combine a four- or five-speed main section with a two-speed auxiliary section at the rear to provide a total of eight or ten speeds forward and two reverse speeds. When equipped with an oil filter, as shown in Figs. 1 and 2, it is attached to either the right or left-hand power take-off opening. Fig. 3 illustrates the gear train of the eight-speed unit whereas Fig. 4 shows a cross section of the ten-speed unit.

LUBRICATION

These transmissions should always be filled through the auxiliary section filler plug opening. Openings between the front and rear sections allow the lubricant to seek its proper level in both sections. *Overfilling will slow the action of the auxiliary synchronizing clutches, Fig. 3, and the extra drag caused may result in damage to the synchronizer discs.*

TROUBLE SHOOTING

NOTE—Before removing the transmission from the truck for inspection, always check for possible trouble in the clutch, drive shaft, universal joints or rear axle.

Noisy Transmission

Excessive noise may be caused by misalignment due to loose mounting bolts, paint on the clutch housing or transmission faces, flywheel housing misalignment, loose parts, dirt or metal chips in the lubricant, or insufficient lubricant.

Transmission noise may also be caused by worn or damaged parts, which requires the removal of the transmission to replace worn parts.

Transmission Shifts Hard

Check the clutch pedal free travel adjustment and clutch parts. Inspect the transmission linkage for binding caused by bent or worn parts. Hard shifting may also be caused by improper lubricant in the transmission.

Transmission Jumps Out of Gear

Improper shifting may cause the transmission to jump out of gear. Be sure the gears are completely engaged before releasing the clutch pedal.

Check the transmission linkage adjustment and make necessary corrections. Check for excessive end play caused by wear in the shift forks, sliding

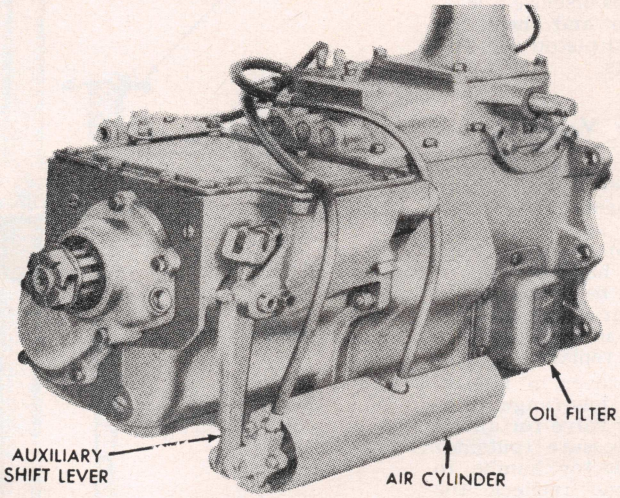

Fig. 1 Road Ranger eight-speed transmission (right side and rear view)

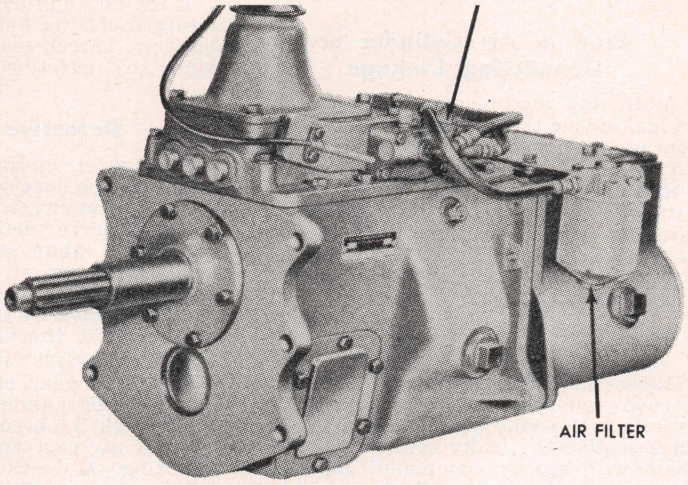

Fig. 2 Road Ranger eight-speed transmission (left side and front view)

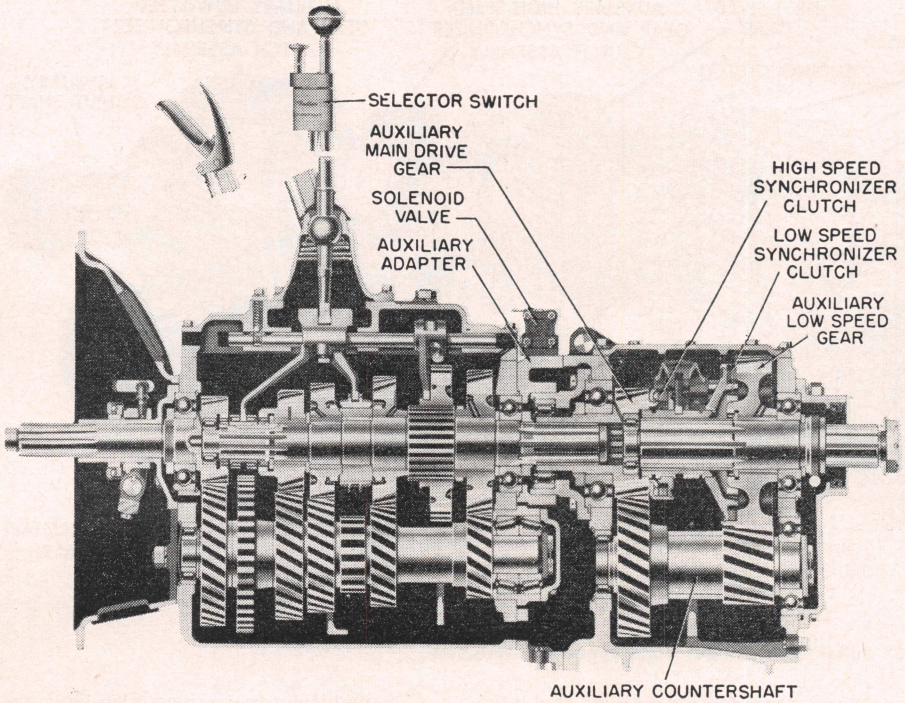

Fig. 4 Road Ranger ten-speed transmission

gear fork grooves, thrust washers, output shaft or countershaft bearings, or clutch pilot bearing or bushing.

Inspect the detent springs in the gear shift housing and replace any that are broken or damaged. Check clutch housing alignment with the engine.

Oil Leakage

Oil leaks may be caused by overfilling the transmission or by using a lubricant that expands and foams while the truck is in operation.

Loose gear shift housing cover screws may allow the lubricant to escape between the housing and transmission case. Check the condition of the bearing retainers and gaskets. See that the transmission vent is open.

Bind in Air Cylinder or Connecting Linkage

With the auxiliary section in high range, relieve the pressure in the air system and disconnect the piston rod of the air cylinder. Slowly move the piston several times through the complete stroke cycle. If either bind or drag is evident, disassemble the cylinder to find the cause. When connecting the piston, check the entire linkage for bind resulting from misalignment.

Leak in Air Lines

Raise the air pressure in the lines to normal and coat all connections in the system with soapy water to locate leaks. Disassemble the leaky connections, coat them with sealing compound and reassemble. Replace worn, leaky air hose, and repair or replace connectors, lines and hoses which continue to leak.

Leak in Air Cylinder

With the air system at normal line pressure and shift lever in neutral, disconnect the hose at the air cylinder which is not under pressure. Check the open port in the cylinder for a leak past the piston leathers. If no leak is found, connect the hose.

Move the shift lever to neutral and move the range selector handle to its opposite position. At the air cylinder, disconnect the air hose which is *not* now under pressure. Check the open port for a leak past the piston leathers; if no leak is found, connect the hose.

Check for a leak at the seal in the cylinder cap where the piston rod enters the cylinder.

If the above procedures disclose a leak, disassemble the cylinder and check the leathers, barrel, seal and piston rod. Replace any defective parts.

Defective Air Valve

Disconnect air hoses at the cylinder and cap each hose securely. After raising the air pressure to normal, move the shift lever to neutral and raise and lower the range selector handle. With each movement of the handle a short, fast blast of air should be heard at the breather valve. If the air exhaust is not as described, the valve is defective and the "O" rings should be replaced.

With the gear shift lever in neutral and selector handle in low-range position, check the breather valve for an escape of air past the pressure (outside) "O" ring. Move the selector handle to the opposite position and recheck the breather valve for a leak past the pressure "O" ring.

With the engine not running and with normal line pressure, move the shift lever in a geared position and then move the range selector handle to its opposite position. With movement of the selector handle a short, fast blast or air should be heard at the breather valve. After the initial exhaust, check the breather valve for continued escape of air past the pre-exhaust (inside) "O" ring.

Move the shift lever to neutral to allow the air valve to complete the shift. Again move the shift lever to a geared position and move the selector handle to its opposite position. After the initial exhaust, check the breather valve for continued escape of air past the pre-exhaust "O" ring.

If a leak is found at the breather valve after either a complete range shift or pre-exhaust of the air valve, replace both "O" rings.

Block In Air System

Raise the air pressure to normal and move the shift lever to neutral. At the air cylinder, disconnect the hose which is not under pressure and move the range selector handle to its opposite position. If no air block exists, a loud, continuous air blast will escape from the disconnected hose. Move the range selector handle to its opposite position and reconnect the loose hose to the cylinder.

Move the range selector handle to its opposite position and proceed as above with the other hose. If this check reveals an air block, it can be located by inspection of the air valve and/or by inspection of the air lines.

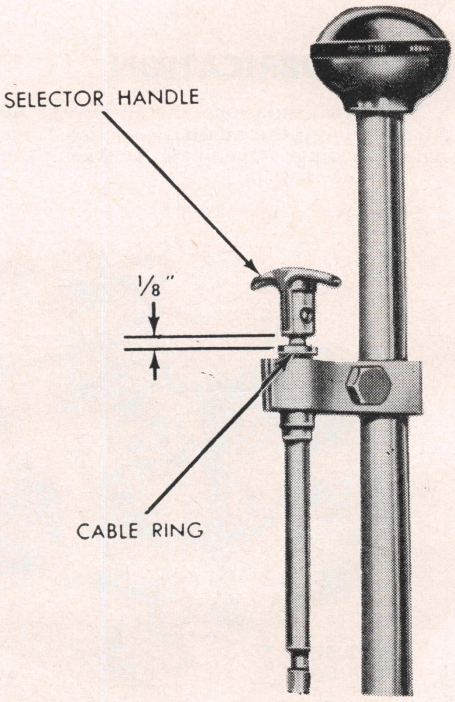

Fig. 5 Selector handle adjustment

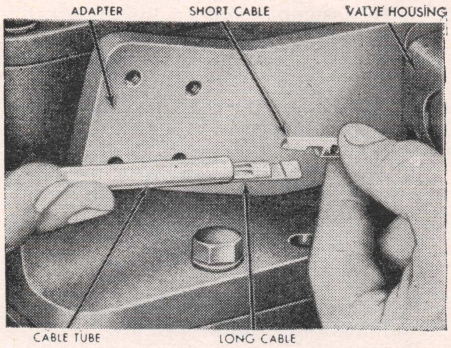

Fig. 6 Long and short shift cable connection

TRANSMISSION REMOVAL

The procedure for removing the transmission varies somewhat depending upon the truck in which it is used. In general, however, it is accomplished as follows:

1. Bleed air reservoirs.
2. Drain transmission.
3. Disconnect drive shaft.
4. Set parking brake and remove companion flange nut.
5. Remove parking brake assembly.
6. Disconnect speedometer cable at transmission.
7. Remove parking brake lever.
8. Move selector control cable to high range position and remove cable retaining clamps.
9. Disconnect cable at connector joint and remove cable and cable tube.
10. Remove gear shift lever housing.
11. Disconnect air line from air filter.
12. Disconnect air lines from air cylinder and remove cylinder from transmission.
13. Remove four lower transmission mounting bolts and install guide studs in the two lower holes.
14. Raise front axle on blocks and position jack under transmission.
15. Install safety chain.
16. Remove transmission support.
17. Remove two upper attaching bolts and remove transmission from truck.

TRANSMISSION INSTALL

Installation of the transmission is the reverse of the removal procedure. However, observe the following:

1. Torque the transmission-to-clutch housing bolts to 120-130 lbs. ft.
2. Torque the brake shoe support bolts to 180-220 lbs. ft.
3. Torque the companion flange nut to 275-350 lbs. ft.
4. Torque the gearshift housing attaching bolts to 35-40 lbs ft.
5. During installation of the selector cable, eliminate unnecessary bends, and do not bend the cable on a radius of less than 4 inches.
6. On tilt-cab models, route the connector end of the cable along the frame before attempting to adjust the cable. Position the frame clamps on the cable but do not attach the clamps to the frame.
7. Push the selector handle all the way down to the cable ring and shift the air valve into high range position.
8. Partially fill the cable tube with Lubriplate and slide it over the end of the long cable.
9. Attach the connector ends of the two cables and move the cable rearward into its bore in the valve housing.
10. Push the cable casing into the connector tube until it contacts the cable joint. *The selector handle must be held up in the high range position during this operation.*
11. With the cable casing in position against the joint, install the cable clamp and spacer on the adapter. *Tighten the bolts finger-tight.*
12. Position the control cable and clamps on the gear shift lever and tighten the clamp bolts securely. On tilt-cab models do not attach the clamps to the frame at this time.
13. Loosen bolts that attach cable clamp and spacer to adapter.
14. Push selector handle down until there is ⅛″ clearance between bottom of selector handle and cable ring, Fig. 5. *This clearance should not exceed ⅛″.*
15. Tighten cable clamp bolts to adapter 10-15 lbs. ft., being careful not to pinch cable casing.
16. Check operation of control cable, making certain that air valve shifts freely into both high and low range positions.
17. On tilt-cab models, install frame clamps.
18. Install transmission cover plate and close air reservoir valves.
19. Fill transmission with lubricant, start engine and check for air leaks.

AIR VALVE SERVICE

Removal

1. Remove floor mat and plate.
2. Move selector control cable to high range position and remove cable clamp and spacer from adapter.

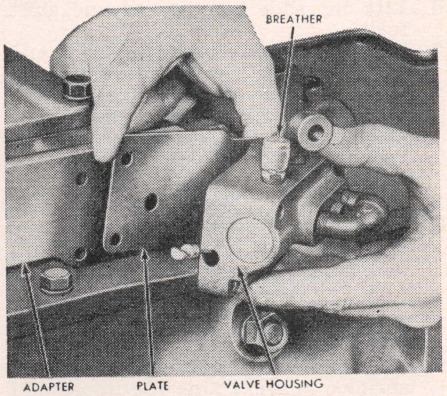

Fig. 7 Air valve and plate

3. Disconnect long and short shift cables at connector joint, Fig. 6.
4. Disconnect 3 hoses at air valve and remove valve housing mounting bolts.
5. Remove air valve and plate, Fig. 7.
6. Remove Allen screw which holds adapter to gearshift housing and remove adapter.
7. Remove lockout spring and pin from bore in gearshift housing.

Disassembly

1. Remove 3 air line fittings from valve housing.
2. Remove breather valve, Fig. 8.
3. Remove Allen head pipe plug from center opening in side of valve housing.
4. *Remove short control cable only for replacement.* Remove Allen set screw from end of lower swivel and pull cable from swivel through opening in front end of valve housing, Fig. 8.
5. Remove upper and lower swivels and spring by prying outward at lower swivel. Spring tension will free both swivels as lower swivel clears side of housing.

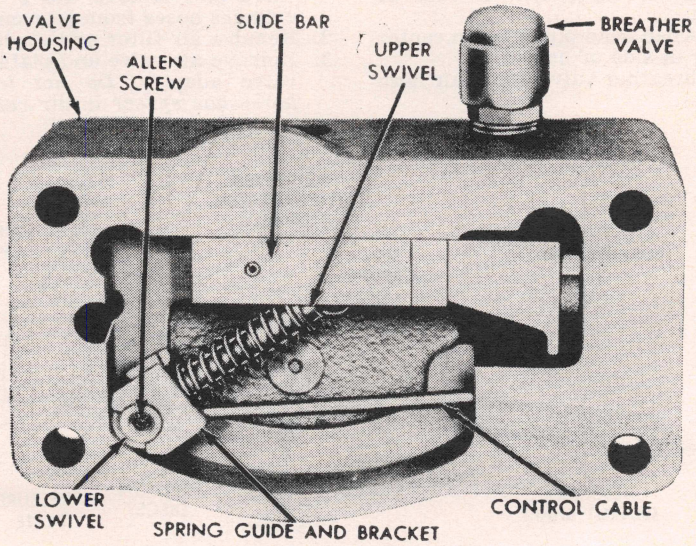

Fig. 8 Air valve

6. Lift out slide bar, spacer and shift fork.
7. Remove welch plug from front end of housing by carefully forcing plug outward with small punch. *Inserts in housing must not be moved or damaged as plug is removed.*
8. Remove valve through welch plug opening by pushing with small screwdriver at shift fork slot.
9. Remove "O" rings from valve.

Inspection

1. Clean and inspect all parts, replacing as necessary.
2. Check tension of actuator and swivel springs, and examine the upper and lower swivels for wear or damage.
3. Check the slide bar, spacer and shift fork for wear or rust, and replace the 4 "O" rings if one or more show wear or damage.
4. Coat the slide bar, spacer, shift fork, lower swivel and contact points with Automatic Transmission Fluid.

Assemble

1. Install "O" rings on valve.
2. Position valve in housing with shift fork slot toward front of housing, and install welch plug.
3. Position slide bar, spacer and shift fork in housing. *Shift fork must engage groove in valve and spacer must be positioned between slide bar and shift fork, Fig. 8.*
4. If short cable was removed from lower swivel, pass new cable completely through swivel. Stake cable securely through set screw hole in swivel. Install set screw.
5. Push connector end of cable through its opening in front of valve housing.
6. Position upper swivel and spring guide and bracket in ends of spring, and position lower swivel in yoke of spring guide.
7. Compress spring until upper swivel enters its depression in slide bar and lower swivel rides on lower track in housing.
8. To provide maximum projection of cable, move slide bar to rear of housing.
9. Install Allen head pipe plug in center opening in side of housing.
10. Install breather valve and 3 air hose fittings.

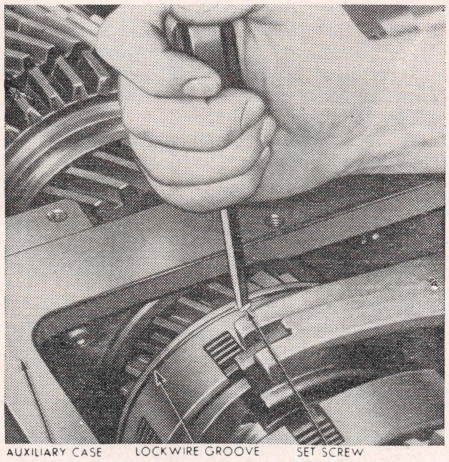

Fig. 9 Removal of one screw from high-speed synchronizer clutch housing

Installation

1. Install lockout spring and pin in gearshift housing bore.
2. Position adapter and install retaining screw.
3. Position valve plate and air valve, install 4 mounting bolts and connect 3 hoses. Torque bolts to 10-15 lbs. ft.
4. Connect long and short shift cables and pull cable tube toward rear until it bottoms in valve housing.
5. Install cable retaining clamp and spacer on adapter and adjust cable as outlined under *Transmission, Install.*

AUXILIARY SECTION SERVICE

Separation Of Main And Auxiliary Transmissions

1. Disconnect 3 air hoses at air control valve and remove the 2 valves-to-cylinder hoses from transmission.
2. Remove air filter and air hose.
3. Remove air valve and plate from air valve adapter. *Do not lose small horseshoe spacer in air valve.*
4. With assembly shifted into neutral, remove main transmission gear shift housing assembly and auxiliary cover.
5. Remove auxiliary rear bearing cover and speedometer drive gear.
6. With a small punch, relieve the auxiliary countershaft rear bearing nut where it is staked to shaft. Shift main transmission into two gears and remove countershaft rear bearing nut. *This nut has a right-hand thread.*
7. Shift main transmission into neutral and auxiliary unit into low range. Remove lock wire from groove at front end of auxiliary high speed synchronizer clutch housing. Remove 3 set screws (in lock wire groove) which secure high speed synchronizer clutch housing to auxiliary drive gear, Fig. 9. Move clutch housing to rear against auxiliary shifting yoke.
8. Remove upper front nuts from two studs inside auxiliary case.
9. Remove 6 nuts retaining auxiliary case to main case.
10. Remove auxiliary case from main case by tapping with a soft mallet.

Disassemble

1. Remove auxiliary detent spring cap from boss under shift fork shaft, and remove spring and ball.
2. Remove shift lever fulcrum pin lock plate and withdraw pin, using a slide hammer.
3. Remove shift lever.
4. Remove swivel pin from shift shaft.
5. To remove shift fork, cut lock wire and remove shift fork lock screws. Withdraw shift shaft and remove fork and fork shoe.
6. Remove oil seal from shift shaft bore in rear of case.
7. Remove auxiliary output shaft pilot bearing.
8. Using a soft mallet, tap auxiliary output shaft forward out of rear bearing. Remove shaft by forcing it forward out of case through front bearing bore.
9. Remove low speed gear, high speed synchronizer clutch and low speed thrust washer from case.
10. Remove output shaft rear bearing from case by lightly tapping bearing outer race with soft drift.

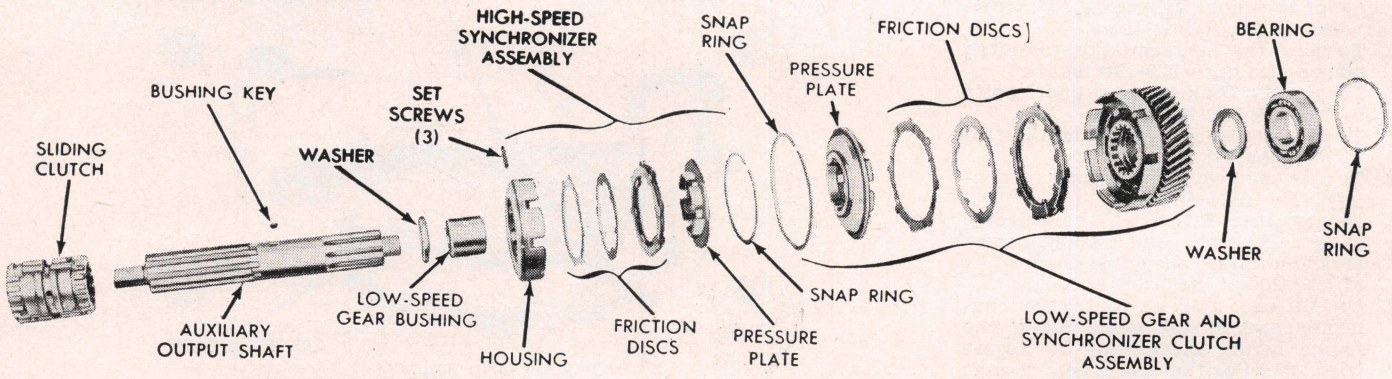

Fig. 10 Auxiliary section output shaft

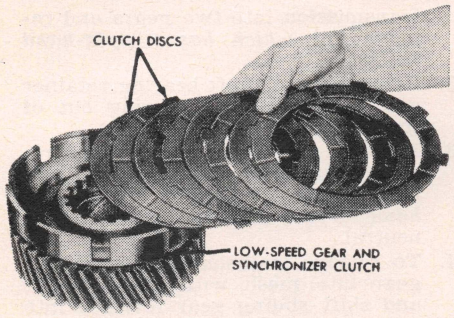

Fig. 11 Positioning synchronizer discs

11. To remove countershaft, tap shaft to rear until rear bearing is out of case. Remove rear bearing from shaft, using a suitable puller.
12. Tilt countershaft and remove it from top of case.
13. Remove front countershaft bearing by tapping lightly on outer race with a soft mallet. If countershaft drive gear is to be replaced, press it off the shaft.
14. To dismantle the output shaft assembly, Fig. 10, first remove the sliding clutch gear.
15. Press the output shaft 5/8" through low speed gear front thrust washer and bushing. *Pressing the shaft more than 5/8" will damage the small Woodruff key and thrust washer.* Move thrust washer forward against shoulder of shaft and press shaft through bushing until key is completely exposed. Remove key and press washer and bushing off shaft.
16. Disassembly of the two clutches is the same. At the rim of the clutch, remove the wire stop for the pressure plate retaining snap ring. Remove snap ring, pressure plate and discs from housing.

Inspection

Check the surfaces of all thrust washers. Washers scored and/or reduced in thickness should be replaced. Synchronizer discs scored, burned or warped should be replaced. Bearing covers grooved or showing wear from thrust of adjacent bearings should be replaced. Check oil return threads in bearing covers. If the sealing action of the threads has been destroyed by contact from the input and output shafts, replace the covers.

Assemble

1. Both synchronizer clutches are assembled the same way. Start with an inner disc (projections at inside diameter) and alternately place one inner and one outer disc in housing until 8 discs have been installed, Fig. 11.
2. Install pressure plate and snap ring. *Lock wire hole in rim of gear must be between open ends of snap ring.*
3. Install lock wire in housing rim and bend wire up internally and down externally. *Internal end must not extend above housing.*
4. Press countershaft drive gear on shaft, Fig. 12.
5. To assemble output shaft, refer to Fig. 10 and proceed as follows:
6. Install low speed gear front thrust washer on rear of shaft *with beveled edge toward front of shaft.*
7. Install Woodruff key and press low speed gear bushing onto shaft until thrust washer is firmly seated against spline shoulder.
8. Install new oil seal in shift shaft bore.
9. Position snap ring on countershaft front bearing and install bearing in case. Tap lightly with soft mallet if necessary.
10. Position countershaft front bearing thrust washer on countershaft and install it in case.
11. Position snap ring on countershaft rear bearing and install bearing, using a suitable bearing driver.
12. Place low speed gear and high speed clutch in case, making sure low gear teeth engage those of low countershaft gear.
13. Install output shaft through front of case, threading it through high speed clutch and low gear until low gear is fully seated on sleeve.
14. Position low gear rear thrust washer on output shaft *with beveled edge toward low gear.*
15. Install snap ring on output shaft rear bearing.
16. Block front of output shaft and install bearing in case, using suitable bearing driver.
17. Install sliding clutch on output shaft through front bearing bore with word "front" toward front end of shaft. Thread sliding clutch through both synchronizer clutches until it engages pocket in low gear. *Interference can be eliminated during installation of sliding clutch by turning synchronizer clutches until lugs on inside diameters line up with grooves in sliding clutch.*
18. Install shoe in shift fork. *Countersunk holes in fork must be up and rib in shoe must face the rear.*
19. Install shoe and fork in sliding clutch.
20. Insert shift shaft in case through fork. End of shaft with milled flats should be to rear. Make sure notches in shaft line up with holes in fork but do not install lock screws.
21. Shift sliding clutch into low speed position and install auxiliary detent spring, ball and cap. Torque cap to 25-35 lbs. ft.

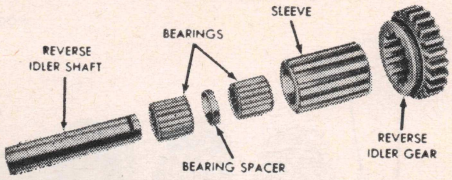

Fig. 13 Reverse idler shaft and related parts

22. Install swivel pin on outer end of shift shaft.
23. Position shift lever on swivel pin. Insert fulcrum pin in case and through shift lever, lining up milled slot in pin with lock screw hole. Drive fulcrum pin into case until slot is flush with case.
24. Install fulcrum pin lock, capscrew and lockwasher, and torque to 20-25 lbs. ft.
25. Install shift fork lock screws and torque to 50-60 lbs. ft.
26. Install safety wires in shift fork screws.

Joining Main and Auxiliary Transmissions

1. Shift auxiliary section into low range. Move high speed clutch to rear against auxiliary shift fork.
2. Install auxiliary output shaft pilot bearing in bore of auxiliary drive gear.
3. Install new gasket between two transmission cases.
4. Attach main and auxiliary cases by fitting auxiliary section over gear which projects from end of mainshaft of main transmission. At the same time, fit auxiliary case over studs which project from rear of main case. The mainshaft rear bearing must be seated in shallow bore in rear of main case before two sections are joined.
5. Install retaining nuts holding two cases together and torque to 65-70 lbs. ft. *Do not overlook the nuts on*

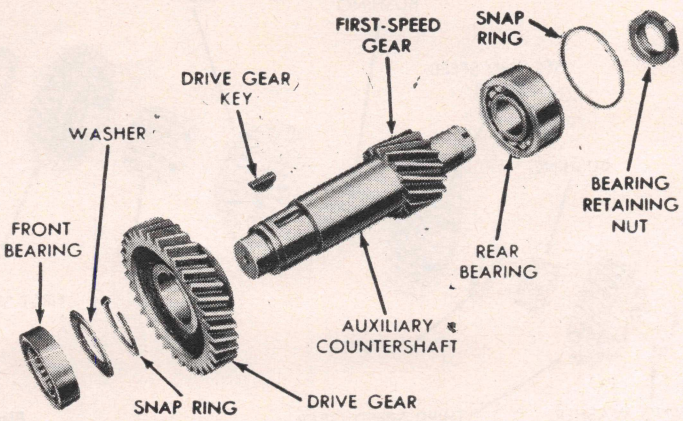

Fig. 12 Auxiliary section countershaft and related parts

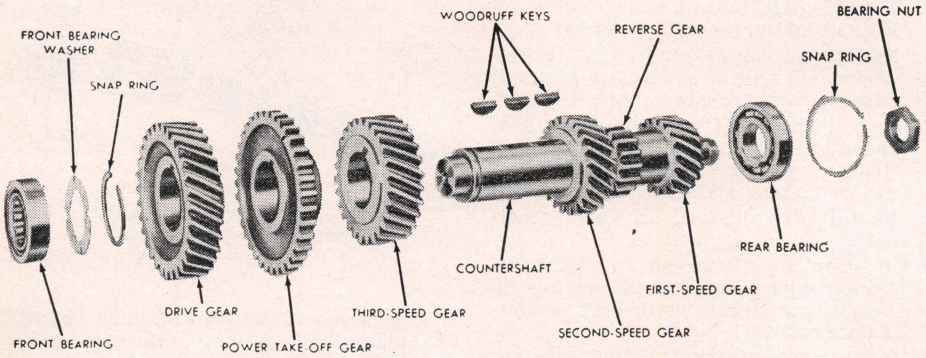

Fig. 14 Countershaft and related parts

the two upper studs on the inside of the auxiliary case.

6. Shift main transmission into two gears and torque auxiliary countershaft rear bearing nut to 250-300 lbs. ft. *This nut has a right-hand thread.* Stake nut at milled slots, and shift transmission into neutral.
7. Move high speed synchronizer clutch forward against auxiliary drive gear.
8. Line up three holes in outside diameter of high speed synchronizer housing with holes in projections on drive gear.
9. Fit high speed clutch on projections of drive gear and move it forward until flush against shoulder of gear, at the same time keeping holes in line.
10. Install three set screws which retain clutch to drive gear. Tighten screws securely and then back them off until the slots are parallel with lock wire grooves in synchronizer housing.
11. Install lock wire in groove at front end of synchronizer housing and through slotted heads of set screws.
12. Install speedometer drive gear.
13. Install auxiliary rear bearing cover with new gasket and torque bolts to 25-35 lbs. ft.
14. Install auxiliary transmission cover and gasket and torque bolts to 35-40 lbs. ft.
15. Shift gear shift housing in neutral and install with new gasket. Shift forks must enter grooves in mainshaft sliding gears and reverse shift lever must engage reverse shift gate. Torque gear shift housing bolts to 35-40 lbs. ft.
16. Install air filter.
17. Install air valve and plate on air valve adapter. Torque bolts to 10-15 lbs. ft. Make sure small horseshoe spacer is installed between slide bar and shift fork.
18. Connect air hose to front of air filter and top fitting of air valve.
19. Install two air cylinder hoses and clamps on transmission and connect hoses to air control valve.

4 SPEED MAIN SECTION

NOTE—Separate the main and auxiliary transmissions as outlined previously. Then disassemble the main section as follows:

Disassemble

1. Using a small punch, unstake countershaft rear bearing nut. Shift transmission into two gears and remove nut, *which has a right-hand thread.*
2. Remove input shaft bearing retainer and pull shaft and bearing out of front of case as an assembly.
3. If input shaft bearing is to be removed, unstake retaining nut and remove the nut, *which has a left-hand thread.* Shift transmission into neutral.
4. To remove mainshaft, shift reverse gear into mesh with countershaft, and shift sliding gear forward into second speed position. Then lift mainshaft from case.
5. Remove nut from reverse shift lever pivot pin on left side of transmission case. Force pin out of case and remove lever and pin.
6. Remove reverse idler shaft retainer through opening in rear of case.
7. Remove shaft by threading a capscrew into the shaft and use a slide hammer to pull shaft from case.
8. Remove splined reverse sleeve with reverse gear, bearings and spacer.
9. Remove reverse idler gear from sleeve.
10. Remove caged bearings and spacer from sleeve, Fig. 13.
11. To remove countershaft, pry it to rear until rear bearing is out of case.
12. Using a suitable bearing puller, remove bearing from countershaft.
13. Lift countershaft out of case.
14. To remove countershaft front bearing, rap front of case sharply with a mallet to jar bearing backward, and remove it from case.
15. To disassemble input shaft, remove bearing nut and press bearing from shaft.
16. If countershaft gears are to be removed, remove snap ring and press gears off shaft one at a time, Fig. 14. Remove Woodruff keys from shaft.

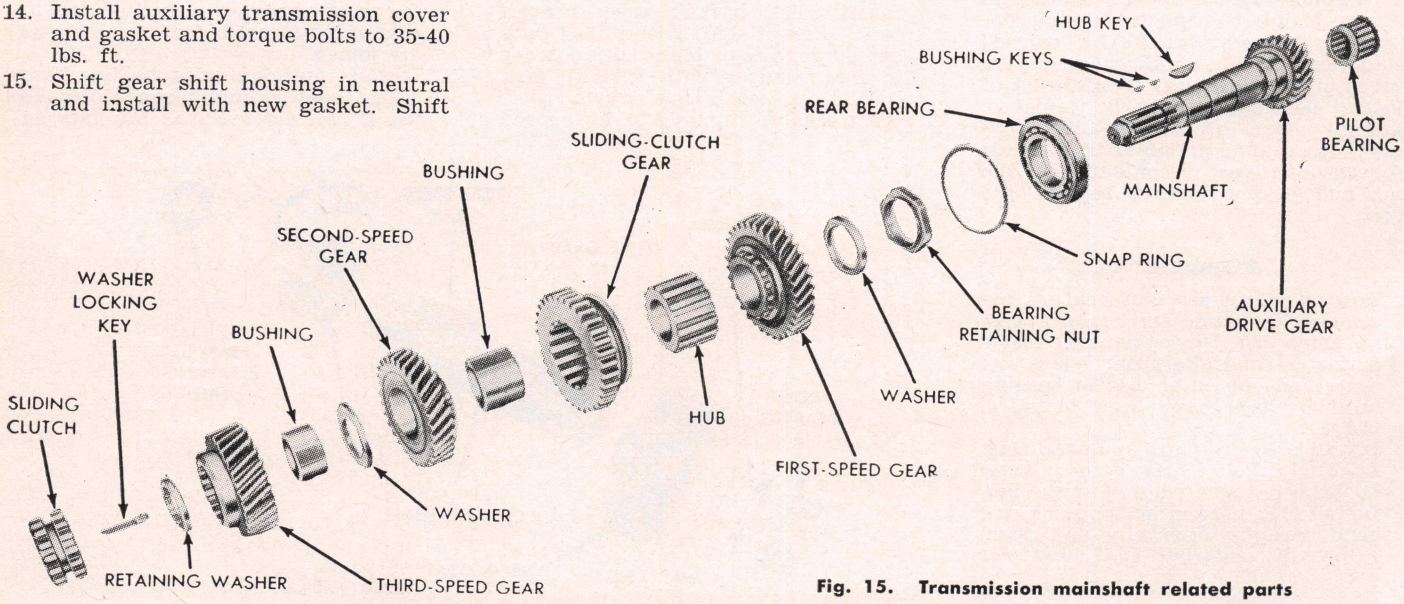

Fig. 15. Transmission mainshaft related parts

Mainshaft Disassemble

1. Secure mainshaft assembly in a soft-jawed vise.
2. Remove pilot bearing.
3. Tap sliding clutch off shaft.
4. At pilot end of shaft and between the splines, pry out third speed gear washer locking key. Remove washer and gear, Fig. 15.
5. Position mainshaft in a press, using sliding clutch gear as a base and press mainshaft 1/8" through third speed gear bushing and thrust washer. If a press is not available, pry bushing upward. *Travel of mainshaft is limited to 1/8" by the small Woodruff key installed under the sleeve. Pressing the shaft more than 1/8" will shear the key and damage the washer.*
6. Pry third gear bushing upward on shaft to expose Woodruff key, Fig. 16, and remove key.
7. Using weight of sliding clutch gear, jar second speed gear, third gear bushing and thrust washer off shaft.
8. Remove sliding gear.
9. Position mainshaft in press. Then press shaft out of first speed gear, sliding gear hub and second gear bushing.
10. Remove Woodruff keys from shaft and remove first gear thrust washer.
11. Unstake and remove mainshaft rear bearing nut, which has a left-hand thread.
12. Press rear bearing from mainshaft.

Mainshaft Assemble

1. Press mainshaft rear bearing on shaft with snap ring groove toward front and install snap ring.
2. Install rear bearing retaining nut and torque to 300-350 lbs. ft. Stake nut at slots milled into shaft.
3. Install first gear rear thrust washer with beveled edge on the I.D. toward rear of shaft.
4. Install first gear with clutching teeth toward front of shaft, Fig. 15.
5. Install large Woodruff key which prevents movement of sliding clutch gear hub.
6. Position sliding clutch gear hub on shaft with beveled edge at the I.D. toward rear of shaft. Line up keyway with key and press shaft through hub until hub is tight against shoulder of shaft. *When pressing shaft through hub hold first gear against its rear thrust washer.*
7. Install sliding clutch gear on its hub with fork slot to rear.
8. Install small Woodruff key which prevents movement of second gear bushing.
9. Position second gear bushing on shaft, making sure keyway is lined up with Woodruff key.
10. Press or tap bushing into position, making sure it fits tightly against hub.
11. Install second gear with clutching teeth toward rear.
12. Install third gear rear thrust washer with beveled edge at the I.D. to rear.
13. Install Woodruff key which prevents movement of third gear sleeve.

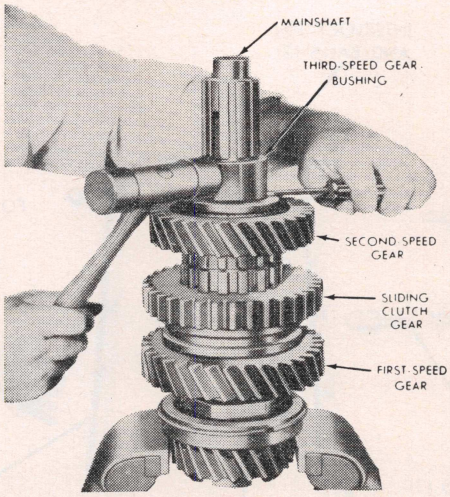

Fig. 16 Gaining access to third speed gear bushing key

14. Line up keyway in third gear bushing with the key, and press or tap bushing into position. Bushing must fit tightly against rear thrust washer.
15. Install third speed gear with internal clutching teeth toward front of shaft.
16. Install third gear retaining washer with beveled edge of lugs at the I. D. to rear. Turn washer in its groove until lugs are under splines on shaft. The thick end of this key must enter slot in washer. Check end clearance between third gear and its thrust washer, which must be .006" to .012". Adjust to specified clearance by selecting a third gear retaining washer of the proper thickness. These washers are available in thicknesses of .253-.255", .258-.260" and .263-.265".
17. Install sliding clutch with word "front" toward front of shaft.
18. Install mainshaft pilot bearing on mainshaft with roller retaining snap ring to rear of shaft.

Main Transmission Assemble

1. Install countershaft front bearing in its bore.
2. Lower countershaft into case and position front of shaft into front bearing.
3. Install countershaft rear bearing, using a suitable bearing driver.
4. Install countershaft rear bearing retaining nut finger-tight. This nut has a right-hand thread.
5. Install bearings and spacer in splined reverse gear sleeve, Fig. 13.
6. Install reverse gear in splined sleeve. Position gear and sleeve in case *with shift fork groove in gear toward front of transmission.*
7. Insert reverse idler shaft in case and through bearings and spacer. Line up slot in shaft with lock screw hole in case.
8. Drive shaft into case until front edge of milled slot in shaft is flush with case wall.
9. Install reverse idler shaft retainer and torque capscrew to 20-25 lbs. ft.
10. Install reverse shifting lug in bottom or gear end of reverse lever. Insert lug in lever from side opposite bosses. Install snap ring on grooved end of lug.
11. Position reverse shifting lever in case, and guide lug into groove in reverse sliding gear.
12. Line up hole in lever with hole in case and install pivot pin through lever and case. Install washer and nut on pivot pin and torque nut to 100-115 lbs. ft.
13. Shift reverse idler shaft into mesh with countershaft and move mainshaft sliding gear into mesh with second speed gear clutching teeth.
14. Lower mainshaft assembly into case, making sure all mainshaft and countershaft gears properly engage, and that the rear bearing is seated in its shallow bore in rear face of case.
15. Install input shaft, making sure mainshaft pilot bearing enters bore in input shaft. Block against rear of mainshaft as input shaft is installed.
16. Shift transmission into two gears and torque countershaft rear bearing nut to 225-275 lbs. ft. Stake nut in place.
17. If input shaft bearing was removed, install retaining nut and torque to 250-300 lbs. ft. Stake nut in place.
18. Shift transmission into neutral. Install input shaft bearing cover and gasket, making sure oil return hole in cover lines up with hole in case. Torque bolts to 25-35 lbs. ft.

5 SPEED MAIN SECTION

Service on the five-speed main section is quite similar to that described for the four-speed main section. However, due to the fact that the mainshaft has more parts and is, therefore, more complex than its four-speed counterpart, herewith is given the procedure for disassembling and assembling the five-speed unit mainshaft. For the balance of the assembly, refer to the procedures outlined for the four-speed unit.

Mainshaft Disassemble

1. With mainshaft assembly removed from case, mount assembly in a vise with soft jaws.
2. At pilot end of mainshaft and between splines, locate and pry washer retaining key from keyway.
3. Turn washer in its groove until lugs on the O.D. line up with spline grooves in shaft.
4. Remove upper bushed gear and front washer over pilot end of shaft.
5. Remove assembly from vise and jar pilot end of shaft against block placed on floor. The weight of third speed gear in Model R-95-C or second gear in Model R-950-C will jar sleeve and washer from shaft. Catch gear and clutch collar as they clear sleeve seat.
6. On Model R-95-C only, mount assembly in press, using rear face of second speed gear as a base. Press shaft through gear. This operation will also remove sleeve assembled in front of gear.

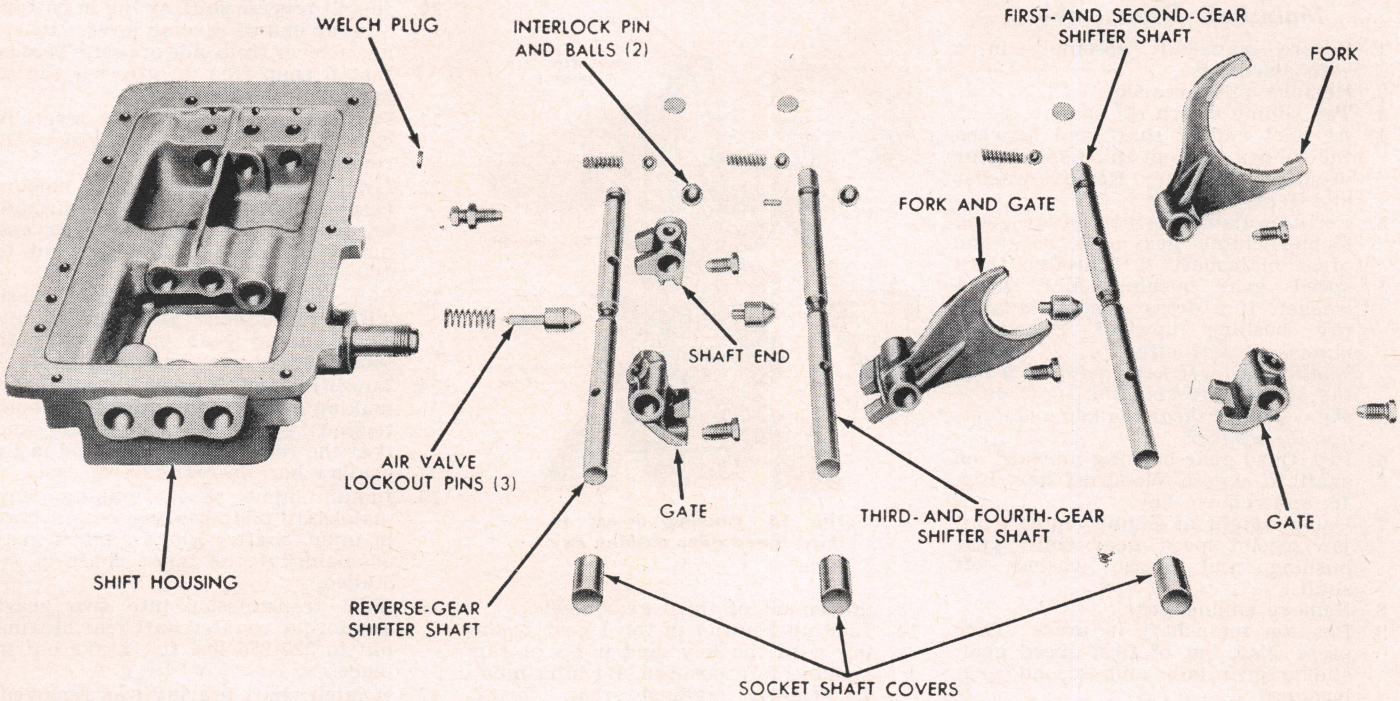

Fig. 17 Eight-speed transmission gearshift mechanism

7. On Model R-950-C only, mount shaft in press, using rear face of first speed gear as a base. Press shaft through gear and front sleeve. Using front face of overdrive gear as a base, press shaft and gear through gear and rear sleeve approximately ¾". *Travel of gear and sleeve is limited to ¾" by Woodruff key installed under sleeve; do not press shaft further.* Move mainshaft overdrive gear to its original position against shoulder on shaft. Using front face of sleeve as a base, press shaft through sleeve. Remove shaft from Woodruff key which prevents radial movement of sleeve. Then remove overdrive gear from shaft.

Mainshaft Assemble

1. Install all parts on mainshaft including sliding gears, bushed gears and rear thrust washers. *Install high speed sliding clutch with counterbore to rear. Install splined sleeve for sliding clutch collar with counterbore to front.*
2. On Model R-95-C only, over rear bearing seat and against first speed gear rear washer, install spacer approximately 1¾" to 2" long. Turn mainshaft rear bearing nut against spacer. Nut and spacer will hold sliding gear, rear bushed gear and washer in place as shaft assembly is placed in case.
3. Install mainshaft assembly in case. On Model R-95-C, remove spacer and nut mentioned above.
4. Install rear bearing, install and tighten nut securely, and stake nut in place.

GEARSHIFT MECHANISM

Fig. 17 shows a layout of the parts comprising the eight-speed transmission gearshift mechanism. A similar arrangement is used for the ten-speed unit.

Gearshift Housing Disassemble

1. Remove the air valve adapter plate and lock pin and spring from the bore in the air valve mounting surface.
2. Remove the welch plug from the interlock bore on the left side of the shift housing and, with air valve mounting face down, mount housing in a soft-jawed vise.
3. Make sure all shifter shafts are in neutral. Then remove lock wires and lock screws from shifting forks and gates, Fig. 17.
4. Remove welch plugs from rear of shift housing.
5. Remove shifter shafts, top one first, by driving them out front of housing. The detent springs and balls, interlock pin and balls, and intermediate air valve lockout pins must not be lost as shafts are removed. A detent spring and steel ball are depressed by each shaft and will be released from the bore as the shaft clears the hole in the rear hub.

Inspection

Shift forks and gates should be checked for wear. Check forks for alignment. Check lock screws in forks and gates. Replace parts showing wear or misalignment. Retighten and rewire lock screws. Check neutral notches in shafts for wear from interlock balls. Shafts indented at points adjacent to neutral notches should be replaced. Check spring tension on shift lever. Replace tension spring and washer if lever moves too freely. Check shift lever pivot pin and slot in lever for wear. Check auxiliary shift fork and shoe for wear. Replace if necessary.

Assemble

Reverse the order of disassembly to assemble the shift housing. Be sure the interlock pin is in the shaft. Torque shift gate and fork lock screws to 50-60 lbs. ft.

FIVE-SPEED UNITS

Figs. 18, 19, 20

Before dismantling a transmission, carefully clean the outside of the case to avoid the possibility of introducing dirt or other foreign material into the unit. This is important because dirt, being abrasive, is highly detrimental to highly polished parts such as bearings, sleeves and bushings. These, as well as other parts, should be cleaned as removed and protectively wrapped until ready for use.

In removing the control cover, do not force it off the transmission. Forcing may spring the yokes out of alignment and cause partial engagement or gear interference. Follow the directions relative to shifting and the cover can easily be removed. If binding occurs, a slight manipulation or movement to one side or the other will free it.

When disassembling the control cover, all parts should be laid on a clean bench in the same sequence as removed. This

procedure will not only simplify reassembling the yokes and bars in their proper places but will also reduce the possibility of omitting the small yoke bar interlock parts. If these parts are left out, the unit will shift into two speeds at the same time.

Unless absolutely necessary, the clutch housing should not be detached from the case. If it is detached, extreme care should be taken when reassembling the housing to maintain the alignment between its machined face and the mainshaft bores in the case; also the concentricity of the mainshaft bores and the flange pilot.

NOTE—The disassembly procedure which follows is based on the assumption that the transmission has been taken from the chassis and that all supplementary equipment such as universal joint companion flanges and brake assemblies have been removed.

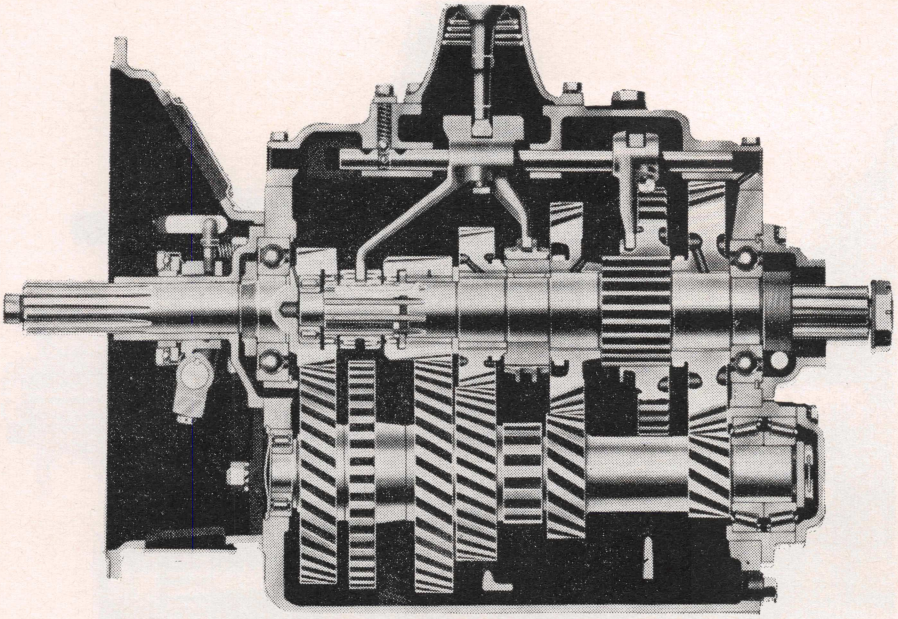

Fig. 19 Fuller five speed transmission. Series 5-72, 720, 5-74

Control Cover, Disassemble

1. Shift transmission into 1st speed.
2. Remove hand brake lever.
3. Detach and lift off cover.
4. Place control lever in neutral.
5. Remove shift yoke lock screws.
6. Start with upper bar and drive shift bars from housing. Use care to see that none of the small yoke bar locking parts are lost as bars are removed.
7. To remove shift lever, take off rubber grip, and latch spoon if lever is equipped with latch rod.
8. Force dust cover up and off lever after removing lock screw from those so equipped.
9. Remove tension spring and washer from inside lever housing, and withdraw shift lever.

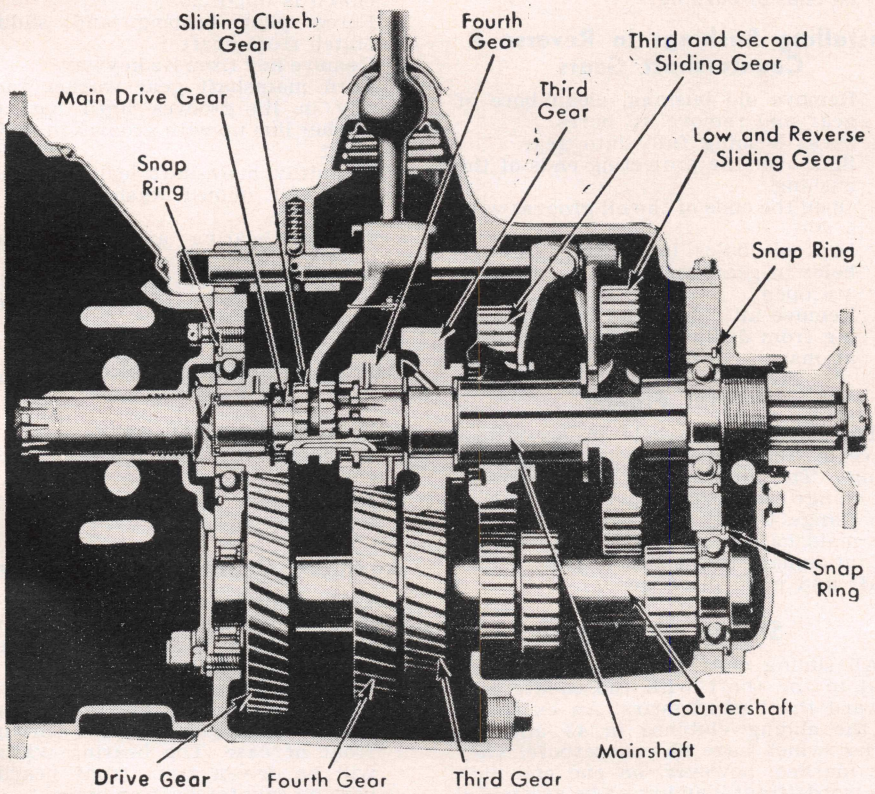

Fig. 18 Fuller five speed transmission. Series 5-33, 330, 5-43, 430

Mainshaft, Disassemble

1. Remove rear bearing covers from mainshaft and countershaft.
2. Lock gears and remove bearing lock nut from end of countershaft.
3. Pull mainshaft and countershaft assemblies to the rear.
4. Remove mainshaft rear bearing.
5. Tilt mainshaft and remove through top of case, leaving sliding gears inside case.
6. Remove loose sliding gears from case.
7. To remove gears and sleeve from mainshaft, remove pilot bearing and sliding clutch, using the latter to free bearing.
8. Remove mainshaft gear retaining washer key.
9. Rotate mainshaft gear retaining washer until its inside lugs line up with grooves in shaft.
10. Remove mainshaft bushed gears, sleeve and washers, using the rear bushed gear to start the sleeves.

Main Drive Gear, Disassemble

1. Remove clutch release mechanism.
2. Remove drive gear bearing cover.
3. Withdraw gear.

Reverse Gears, Disassemble

1. Remove high speed reverse shifting bar and yoke from inside the case (Models 62, 620, 65, 650, 72, 720).
2. Withdraw shaft or shafts and remove gear or gears from case.

Countershaft, Disassemble

1. Remove countershaft rear bearing.
2. Tilt countershaft and remove through top of case.
3. To disassemble countershaft, remove gear retaining snap ring.
4. Press gears from shaft one at a time.

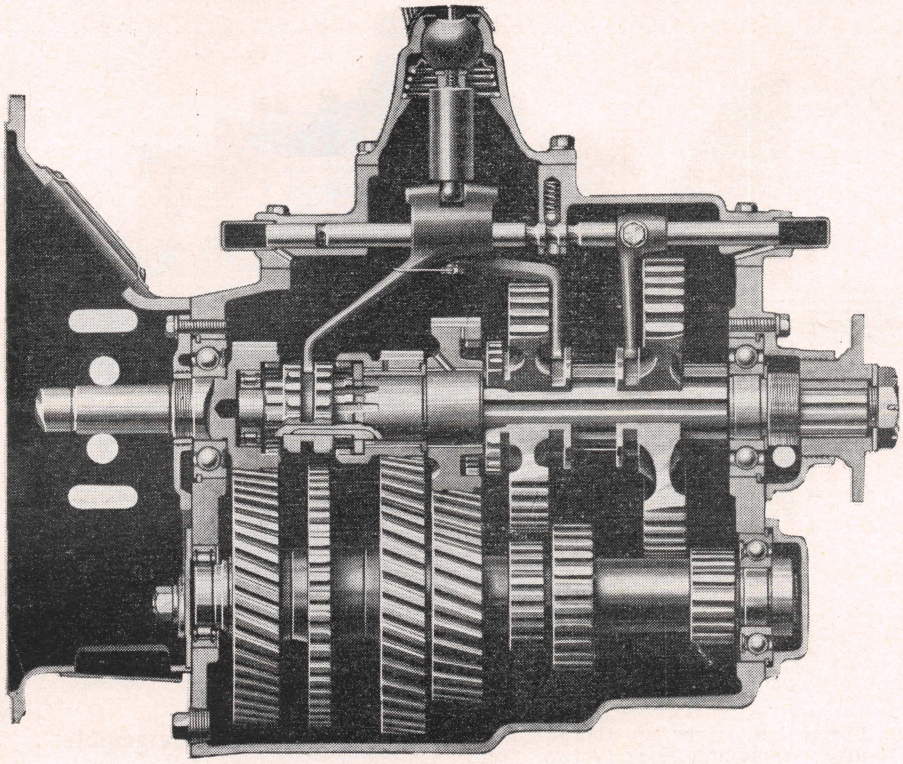

Fig. 20 Fuller five speed transmission. Series 5-62, 620, 5-65, 650

Reassembly Instructions

With the exception of a few specific points, the general instructions for reassembly are merely the reversal of those for disassembly. The exceptions are as follows and should be given careful attention.

Clearances

1. On mainshaft helical bushed gears, replace worn washers to assist in maintaining original fit.
2. Hold end play of both gears to a minimum of .006". Check with dial indicator or feeler gauge.
3. Replace bushings in gears having excessive radial clearance.

Assembling Bushed Gears

When assembling either new or rebushed gears on the mainshaft or counter shaft, be sure that they move freely after having been assembled in their proper places. Clean all mounting parts and coat with clean oil before replacing gears.

Installing Bushings in Mainshaft Helical Gears

1. Remove old bushing.
2. Clean bore of gear carefully and remove all burrs.
3. Lubricate outside diameter of bushing and inside diameter of gear.
4. Carefully press bushing fully into gear.
5. Face off any projecting end of bushing.
6. Drill oil holes in bushing through holes in gear, making sure all holes are open.
7. Remove all burrs resulting from drilling and break all sharp edges on ends of bushing.

Installing Bushings in Reverse & Countershaft Gears

1. Remove old bushing, clean bore of gear and remove all burrs.
2. Press bushing fully into gear.
3. Spin over the projecting ends of the bushing.
4. Open the ends of the oil grooves with a file.
5. Drill oil holes in bushing through holes in gear, making sure all holes are open.
6. Remove all ridges and burrs resulting from drilling and spinning operations.

U-Joint Flange

The mainshaft is held in its proper place by the universal joint companion flange. The omission of parts between the flange and bearing, or failure to pull the flange tightly into place will allow the mainshaft to move endwise with resutant damage to the pilot bearing, mainshaft and main drive gear.

Sliding Clutches

All sliding clutches should be assembled to the shaft with the counterbore toward the bushed gears. An exception is the sliding clutches in 43 and 430 series, which have no counterbore. They are marked, however, on one end with the word "front," and must be assembled with the marked end toward the front of the transmission.

Power Take-Off

When attaching a power take-off, be sure sufficient filler blocks and gaskets are used to prevent the gears from meshing too deeply. If the gears bottom, they will damage not only themselves but also the transmission case.

SERIES 10-1120

Separating Front & Gear Boxes, Fig. 21

1. Disconnect auxiliary control rod from shifting bar.
2. Detach front case from rear case and separate two units. Start rear section by rapping bulges on either side of case. Complete the separation by prying in the opening between the two cases.

Auxiliary Section, Disassemble

1. Shift unit into direct drive.
2. Remove flat top cover.
3. To disassemble drive gear, remove capscrews and withdraw drive gear, bearings and cover as a unit.
4. Force drive gear through front roller bearing to separate gear and cover.
5. Remove nut from drive gear (left-hand thread).
6. Jar bearing from drive gear.

Auxiliary Mainshaft, Remove

1. Remove rear bearing cover from case.
2. Turn shaft so that key under sliding clutch is uppermost.
3. Force pilot bearing and sliding clutch from shaft.
4. Remove key from its keyway.
5. Turn mainshaft gear washer radially in its grooves until lugs on washer line up with grooves in mainshaft.
6. Withdraw mainshaft, leaving bushed gear and splined washer inside of case.
7. Remove bearing and rear thrust washer.
8. Press sleeve from mainshaft.
9. Remove loose parts freed by removal of shaft.

Auxiliary Shifting Yoke & Bar, Remove

1. Remove screw from yoke.
2. Withdraw bar and lift yoke from case.
3. Remove pipe plug over bar and lift out spring and ball.

Auxiliary Countershaft, Remove

1. Lock countershaft so it can't turn.
2. Remove rear bearing retainer plate.
3. Remove snap ring from countershaft front bearing bore.
4. From the rear, force countershaft from its seat in rear bearing through gears and spacer and out through front of case. The bearing washer will be driven from front bearing bore as countershaft emerges.
5. Press countershaft from front roller bearing.

6. Remove bearing from rear bore of case.
7. Lift two gears and spacer from case.

Five-Speed Section, Disassemble

1. Shift transmission into 2nd speed.
2. Detach and remove shift lever housing.
3. Detach and remove shifting bar housing.

Overdrive Gearing, Remove

1. Remove lock screw from overdrive shifting yoke.
2. Drive overdrive yoke bar to rear and out of case.
3. Remove overdrive shifting yoke.
4. Unlock nut from mainshaft splines and remove from shaft.
5. Remove overdrive mainshaft gear and front thrust washer.
6. Remove countershaft sliding clutch.
7. Pry countershaft overdrive washer key from its keyway.
8. Turn countershaft gear retaining washer in its groove until its lugs line up with grooves in shaft.
9. Pull countershaft bushed gear to rear, which will also remove the washer.

Clutch Shaft & Drive Gear, Remove

1. Remove clutch release mechanism.
2. Remove drive gear bearing cover.
3. Remove drive gear and bearing.
4. Mount gear in vise and remove drive gear retaining nut (left-hand thread).
5. Jar or press bearing from gear.

Mainshaft Assembly, Remove

1. Remove countershaft front bearing cover.
2. Drive countershaft forward as far as possible (⅛").
3. Remove mainshaft pilot bearing and sliding clutch by driving against clutch with a soft bar.
4. Mark the four tapped holes in the rear bearing retainer which have no capscrews assembled into them.
5. Remove all ⅜" capscrews from rear bearing retainer.
6. Install four of the ⅜" capscrews in the marked holes and, using as a puller, evenly tighten them to pull the mainshaft rear bearing to the rear and from the shaft. If the bearing does not clear the shaft after the full length of the puller screws is utilized, rap the rear end of the shaft sharply to drive it through the bearing.
7. Attach a small "C" clamp to the 3rd speed gear. Attach a chain hoist or block and tackle to the "C" clamp and lift the mainshaft assembly from the case, leaving the sliding gear inside the case.
8. Remove bushed gear and sliding gear from case.

Mainshaft, Disassemble

1. Mount assembly in a vise and pry 3rd speed gear washer key from between splines.
2. Turn 3rd speed gear retaining washer in its groove until its lugs line up with grooves in shaft.
3. Withdraw washer and 3rd speed gear over pilot end of shaft.
4. Jar pilot end of mainshaft against a wood block until weight of 3rd speed gear moves sleeve and washer not more than ¼" to front.
5. Insert on shaft end between washer and sleeve a C-shaped spacer made from strap iron, making sure that keyway in sleeve falls under opening in spacer.
6. Jar pilot end of shaft until woodruff key is completely exposed between open end of C-shaped spacer. Use a second C-shaped spacer wider than the original to completely expose the key.
7. Remove woodruff key and jar sleeve, washer and 3rd speed gear completely off shaft, catching gear as it clears sleeve seat.

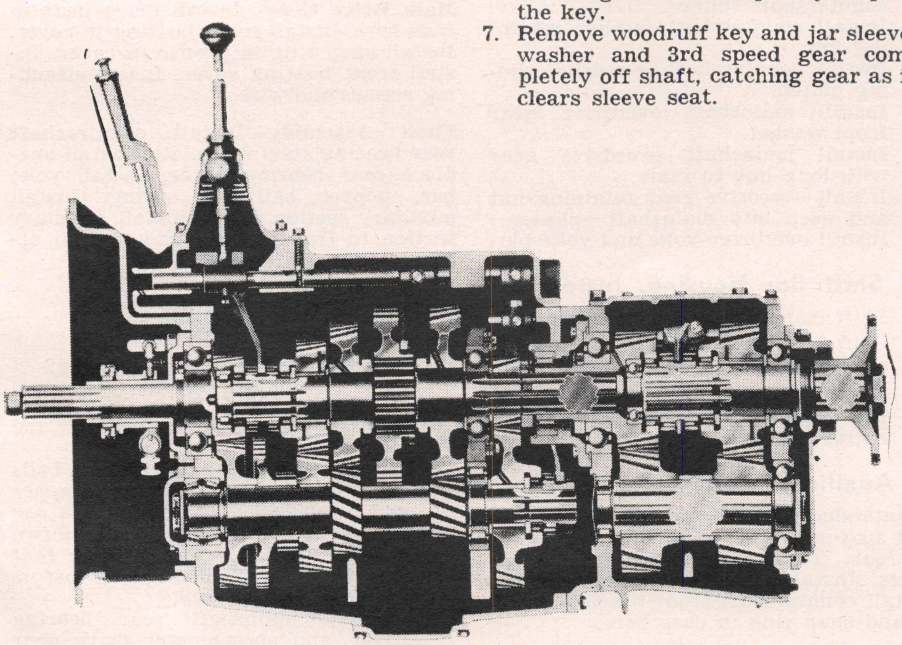

Fig. 21 Fuller ten speed transmission. Series 10-1120

Reverse Gearing, Remove & Disassemble

1. Remove reverse idler shaft lock.
2. Attach puller at opening in rear end of case and withdraw reverse idler gear shaft.
3. Lift both sections of reverse gearing from case.
4. Remove two roller bearings and spacer from gear sleeve.
5. Remove thrust washers and buttons from case.
6. Remove bushed reverse gear from idler assembly.
7. Remove snap ring from sleeve.
8. Press reverse idler gear driver from sleeve.

Countershaft, Remove & Disassemble

1. Remove front bearing retainer plate.
2. Install two ⅜" x 2" capscrews in tapped holes in front flange of countershaft front bearing housing.
3. Pull front bearing housing and bearings from shaft by evenly tightening the two "puller" screws.
4. Pull countershaft rear bearing, sleeve and washer to rear until bearing completely clears its seat on shaft.
5. Insert a C-shaped spacer on shaft between washer and sleeve, making sure keyway in sleeve falls between open ends of spacer.
6. Pull countershaft rear bearing backward until woodruff key is exposed between open ends of spacer.
7. Remove key and pull rear bearing, sleeve and washer from shaft.
8. Remove snap ring from front end of shaft.
9. Press drive gear from shaft.
10. Remove woodruff key and press remaining gears off *one at a time.*

Main Transmission, Assemble Reassembly Precautions

When reassembling mainshaft bushed gears, make sure they move freely. All parts should be carefully cleaned and lubricated. The end play of all helical gears should be held to a minimum of .006" and a maximum of .014". Check carefully with either a feeler gauge or a dial indicator. Of the two limits shown in connection with end play, the minimum of .006" is by far the more important. To go below this figure is to invite trouble. The bushed gears may freeze to the shaft or sleeve as a result of insufficient endwise clearance.

All bushed and sliding gears should be replaced on the mainshaft before it is reinstalled in the case. This is necessary because of the difficulty of threading the rear end of the mainshaft through the 1st and 2nd speed sliding gear and the bushed 1st speed gear. Hold these gears in their proper positions as the mainshaft assembly is reinstalled.

Countershaft, Assemble & Install

1. Press individual gears on shaft one at a time in their proper position.
2. Install gear retaining snap ring.
3. Lower assembly into case.
4. Install front bearing adapter.

5. Install rear bearing cup in adapter.
6. Holding countershaft as straight as possible, install rear bearing.
7. Install front bearing rear cone, spacer, front cone and cup in that order.
8. Install front bearing retaining plate.
9. Install front bearing cover.

Reverse Gearing, Assemble & Install

1. Install splined drive gear on sleeve with chamfered teeth to rear, and with snap ring on each side.
2. Clean and oil sleeve and install bushed gear so internal clutching teeth will engage external teeth of sleeve.
3. Clean and oil bearings and install in sleeve with spacer between bearings.
4. Install buttons in thrust washers.
5. Insert idler shaft in rear boss until it protrudes inside case about $\frac{3}{16}$". Install rear washer on shaft.
6. Using a short bar slightly smaller in diameter than idler shaft, insert it in front boss to hold front thrust washer in place.
7. Lower idler assembly in place, being careful not to dislodge washers.
8. Install idler shaft. *Be sure to remove bar tool.*
9. Install idler shaft lock.

Mainshaft, Assemble & Install

1. Mount mainshaft in vise with companion flange end down.
2. Clean and oil 2nd speed gear seat and install gear with clutch teeth to rear.
3. Install 3rd speed gear rear thrust washer.
4. Install woodruff key in mainshaft.
5. Install 3rd speed gear sleeve, making sure key in shaft lines up with keyway in shaft.
6. Clean and oil 3rd speed sleeve and install 3rd speed gear with clutch teeth to front.
7. Install 3rd speed gear splined thrust washer with flat machined surface toward gear.
8. Turn washer until its lugs line up with mainshaft splines.
9. Install key in keyway between splines.
10. Remove mainshaft from vise and install first and reverse speed sliding gear with chamfered teeth to rear.
11. Clean and oil first speed gear seat and install gear with clutch teeth to front.
12. Lower mainshaft in case.
13. Install first speed gear rear thrust washer.
14. Install rear bearing with combination bearing puller and retainer assembled to it.
15. Install bearing retainer capscrews and wire.

Clutch Shaft & Gear, Assemble & Install

1. Press gear into bearing.
2. Install and peen bearing retaining nut into milled notches of gear.
3. Install mainshaft 3rd and 4th speed sliding clutch with counterbore to rear.
4. Install mainshaft pilot bearing with snap ring to rear.
5. Install clutch shaft and drive gear.
6. Install front bearing cover.

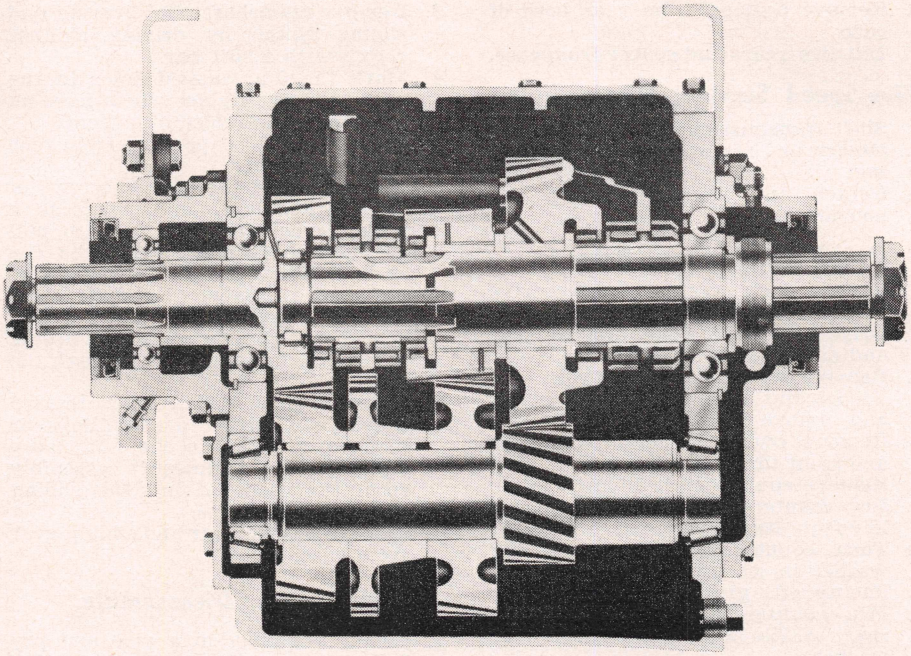

Fig. 22 Fuller Series 3-65 auxiliary transmission

Overdrive Gear, Install

1. Install countershaft overdrive gear front thrust washer.
2. Install key in countershaft.
3. Install countershaft overdrive gear sleeve.
4. Clean and oil sleeve and install overdrive gear with clutch teeth to rear.
5. Install splined rear thrust washer in its groove until its lugs line up with countershaft splines.
6. Install countershaft washer retaining key.
7. Install countershaft overdrive sliding clutch.
8. Install mainshaft overdrive gear front washer.
9. Install mainshaft overdrive gear with long hub to rear.
10. Install overdrive gear retaining nut and peen into mainshaft splines.
11. Install overdrive yoke and yoke bar.

Shift Bar Housing, Install

1. Shift transmission into 2nd speed.
2. Shift bar housing into 2nd speed.
3. Install shift bar housing, making sure yokes enter slots of gears.
4. Install attaching screws and tighten evenly and securely.

Auxiliary Section, Assemble

Countershaft—Place countershaft gears and spacer in case with long gear hubs to rear. Thread countershaft through gears. Install front and rear bearings. Install countershaft front bearing washer and snap ring in case bore.

Yoke—Install shifting yoke with attaching capscrews to rear. Tighten and lace screws with wire.

Mainshaft—Press low speed gear sleeve on shaft. Do not press it all the way to washer groove. Place low speed gear in case. Thread mainshaft through low speed gear from rear, at the same time thread shaft through splined thrust washer and sliding clutch. Turn splined washer in its groove until ites lugs line up with mainshaft splines. Install key in mainshaft keyway. Install low speed gear rear thrust washer and rear bearing. Install mainshaft pilot bearing.

Main Drive Gear—Install drive gear in case bore. Install roller bearing in cover. Install snap ring in groove in cover. Install front bearing cover. Insert attaching screws and wire.

Final Assembly—Install countershaft rear bearing retaining plate. Install one-piece rear bearing cover. Install yoke bar, poppet ball and spring. Install auxiliary section cover. Install auxiliary section to front section and tighten attaching screws securely.

3-65 SERIES

Three Speed Auxiliary Units, Fig. 22

1. Shift transmission in neutral and take off cover.
2. Remove shifting bars, yokes, balls and springs. *There will be an upper and lower ½" poppet ball, plus one interlocking ball located between two shifting bars. Use care to see that the springs and balls are not lost as the bars are removed.*
3. Remove mainshaft rear bearing cover, and speedometer drive gear and washer from mainshaft.

4. Drive mainshaft to the rear from inside of case, forcing mainshaft rear bearing out of case. Remove rear bearing from shaft.
5. Remove low speed sliding clutch gear through mainshaft rear bearing bore and over universal end of mainshaft.
6. Tilt mainshaft assembly and remove through top of case.
7. Disassemble mainshaft.
8. Force countershaft assembly to rear until cup of countershaft rear bearing has been forced from case. Then move countershaft back through rear bore as far as it will go.
9. Remove main drive gear bearing cover attaching screws. Then force drive gear backward through bearings and cover into interior of case; then lift out through top.
10. Remove drive gear bearing cover, thus freeing drive gear bearing spacer.
11. Remove countershaft front bearing cover and front bearing cup. See that shims are not lost or damaged.
12. Tilt countershaft and remove through top of case. Press gears from shaft one at a time.

Countershaft, Reassemble

1. Insert Woodruff keys in countershaft.
2. For Models A, D, E, F, press overdrive, PTO gear and drive gear on countershaft in order named, pressing them on one at a time. For Models B and C, press on low speed gear, overdrive gear, PTO gear or spacer, and drive gear. For models G and H, press on intermediate gear, PTO gear or spacer and drive gear. *Shaft enters chamfered side of gear bores.*
3. Install gear retaining snap ring on front end of countershaft.
4. Mount bearing cones on each end of countershaft.

Main Drive Gear, Assemble and Install

1. Install countershaft into case with rear bearing protruding through rear countershaft bore in case.
2. Remove snap ring from main drive gear bearing.
3. Press drive gear bearing partly on drive gear shaft, *leaving approximately ½″ space between bearing and drive gear.*
4. Install drive gear from inside of case through case bore until bearing snap ring groove is clear of case. Install snap ring in bearing.
5. Complete installation of bearing on drive gear, closing up the ½″ space left previously. When in correct position, bearing will fit in proper place in case bore with inner race solid against drive gear shoulder.

Countershaft, Install

1. Install countershaft front bearing cup in case bore.
2. Move countershaft to front and insert assembled cone on countershaft front bearing into cup.
3. Install countershaft rear bearing cup in case.
4. Install countershaft rear bearing cover and tighten screws securely.
5. Install countershaft front bearing cover, adding or subtracting shims to give free running clearance of .003″ to .005″ end play. When proper end play has been obtained, remove rear bearing cover.

Mainshaft, Reassemble

1. Grip mainshaft in soft jaw vise with pilot end up.
2. Install rear low speed gear washer (waffle side facing up) on shaft. Install low speed gear sleeve on shaft.
3. Install low speed gear with internal clutching teeth facing rear of shaft.
4. Install overdrive gear rear thrust washer.
5. Install overdrive sleeve.
6. Install overdrive gear.
7. Install overdrive gear spline washer with flat thrust surface toward gear. Turn washer in its groove until lugs on its inside diameter line up with splines of mainshaft.
8. Install overdrive gear washer key in keyway between splines of mainshaft.
9. Install direct and overdrive sliding clutch with counterbore to rear.
10. Install mainshaft pilot bearing with roller retaining snap ring to rear.

Mainshaft, Install

1. Lower mainshaft into case, engaging helical gears of mainshaft with those of countershaft.
2. Enter pilot bore into drive gear bore.
3. Install low speed sliding clutch gear over end of shaft with chamfered teeth facing low speed gear.
4. Install mainshaft rear bearing.
5. Install speedometer gear washer with chamfered side in, and speedometer drive gear on shaft.
6. Install mainshaft rear bearing cover.
7. Install oil seal in rear bearing cover.
8. Install drive gear bearing cover, *leaving cover nuts loose to prevent damage to outer bearing during installation.*
9. Install drive gear spacer and outer bearing, making sure bearing is firmly seated.
10. Tighten drive gear bearing cover nuts.
11. Install oil seal in drive gear cover.

INDEX & LUBE CAPACITY

Model	Speeds	Oil, Pts.	Page
245, 275	5	12	135
420	4	5½	136
433, 434	4	10	137
540, 541	5	10	137
875, 895	5	8	140
5401, 2, 3, 4	5	10	137

SERIES 245, 275

Disassemble, Figs. 1, 2

1. Remove nut from output shaft.
2. Remove parking brake, universal joint spline flange and parking brake drum.
3. Remove gearshift housing.
4. Remove power take-off covers and gaskets.
5. Remove speedometer driven gear and bearing from output shaft bearing retainer.
6. Remove output shaft bearing retainer and slide speedometer drive gear and spacer from output shaft.
7. Remove input shaft bearing retainer and pull shaft and bearing out through front of case.
8. Slide synchronizer assembly off output shaft and lift shaft out of case.
9. Pull reverse idler gear shaft out of case and lift out gear.
10. Remove countershaft front bearing retainer, unfasten retainer washer and remove washer.
11. Remove bolts from countershaft rear bearing cap. Tap countershaft toward rear until bearing cap and bearing is forced out of case.
12. Lift out countershaft front bearing.

NEW PROCESS TRANSMISSIONS

Disassemble Sub-Assemblies

Input Shaft—Remove lock nut from end of shaft and remove bearing. Remove snap ring from shaft bore and remove output shaft pilot bearings. Remove snap ring from output shaft bearing.

Output Shaft—Slide low and reverse gear and 2nd speed gear from shaft. Remove snap ring and remove 4th and 5th gear synchronizer hub. Slide 4th speed gear (5th gear on overdrive units) and thrust washer from shaft. Remove bushing from gear and pin from bushing.

Slide off 3rd speed gear and thrust washer and remove bearing rollers from gear. Separate synchronizer parts and inspect for wear or damage. Reassemble with new parts as necessary.

Countershaft—Remove thrust washer from front end of countershaft. Press gear cluster off shaft and drive key from shaft slot.

Reverse Idler Gear — Remove thrust washer from bore of gear and remove bearing rollers and spacer.

Assemble Sub-Assemblies

Reverse Idler Gear—Install spacer in gear. Coat bearing rollers with grease and install 31 rollers in each end of gear. Install washer at each end of gear next to rollers.

Countershaft—Install spacer on shaft and key in slot. Press gear cluster on shaft until gear is seated against spacer.

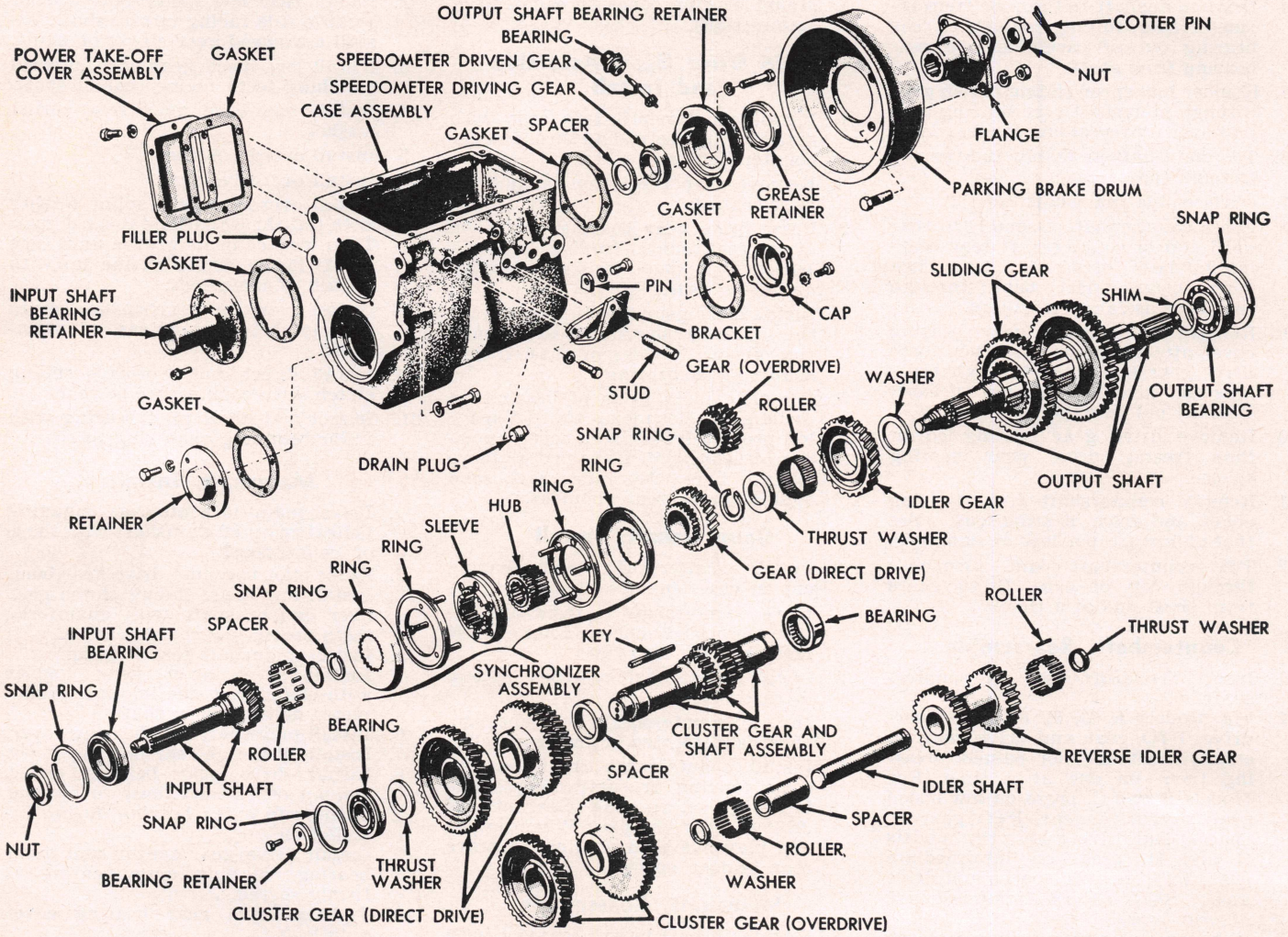

Fig. 1 New Process five speed transmission. Series 245, 275

Position thrust washer on forward end of shaft.

Output Shaft—Coat 3rd speed gear rollers with lubricant and install rollers in bore of gear. Place thrust washer on shaft and slide gear on shaft with spur gear teeth toward rear.

Install lock pin in 4th speed gear bushing (5th speed gear on overdrive units). Place thrust washer on shaft and install bushing. Install gear on bushing with shorter teeth toward front.

Position clutch gear on shaft and install snap ring in shaft groove. Check 3rd speed gear end play. If not within .006-.008", replace snap ring with one of the proper thickness to give correct end play.

Position 2nd speed gear on shaft with shift fork groove toward rear. Install low and reverse gear on shaft with shift fork groove toward front of shaft. Assemble synchronizer as shown in Fig. 1.

Input Shaft—Install bearing on shaft. Install lock nut and tighten until bearing is firmly seated against gear shoulder. Install snap ring in shaft bearing groove.

Coat pilot bearing rollers with grease. and install in bore of input shaft. Secure bearings with snap ring.

Installation in Case

1. Install snap ring on countershaft front bearing and tap bearing into case.
2. Position countershaft in case and insert forward end in front bearing.
3. Tap countershaft rear bearing and cap into case and onto countershaft. Install bolts and lockwashers.
4. Install countershaft front bearing retaining washer and retainer.
5. Position reverse idler gear in case and tap idler shaft into case until notch in shaft is flush with rear face of case. Install shaft retainer.
6. Place output shaft in case and slip on synchronizer.
7. Install input shaft through front of case. Tap assembly into case until bearing snap ring is seated in recess in case. Install and tighten bearing retainer.
8. Position output shaft into pilot bearing, then install shims on rear of output shaft. Install snap ring on output shaft bearing and tap bearing into case bore until snap ring is seated against rear face of case. Install spacer and speedometer drive gear on output shaft.
9. Install output shaft bearing retainer and tighten securely.
10. Check end play of synchronizer. If not within .040-060", change shims at rear of output shaft until correct end play is obtained.
11. Install speedometer driven gear and bearing. Install power take-off covers.
12. Place gears in neutral and install gearshift housing, tightening bolts to 30-40 lb. ft. torque.
13. Slide parking brake drum onto output shaft and place band and lever on drum. Install bolts to case and torque them to 30-40 lb. ft.
14. Install parking brake band anchor spring and adjusting screw, then adjust brake.

SERIES 420

Disassemble, Fig. 3

1. Remove nut from companion yoke.
2. Remove hand brake linkage and band.
3. Pull off brake drum and companion yoke.
4. Remove transmission cover.
5. Remove rear bearing retainer and

seal assembly, and speedometer drive gear.

6. Remove main drive gear bearing retainer, gear and bearing.
7. Remove snap ring and pull rear bearing from case. Remove shim pack and tie shims together for reassembly.
8. Remove synchronizer snap ring and slide synchronizer gear forward. Then slide synchronizer from mainshaft.
9. Lift mainshaft assembly out of case through sliding gears. Then remove sliding gears from case.
10. Remove reverse idler shaft lock plate, pull out shaft and lift gear from case.
11. Remove rear countershaft bearing retainer and bearing. Then remove front countershaft retainer, cap screws and lock plate, and remove bearing.
12. Lift countershaft assembly from case.

Reassembly

Reverse Idler Gear—Install spacer in gear. Coat roller bearings with grease and install a complete set of 31 rollers in each end of the gear. Install a thrust washer in each end of the gear.

Countershaft—Install spacer and drive key in shaft keyway. Remove all burrs from key and shaft and press gear cluster onto shaft until gears bottom on spacer. Then install thrust washer on forward end of shaft.

Mainshaft—Coat third speed gear roller bearings with grease and place in third speed gear. Install thrust washer on mainshaft. Position third speed gear with spur teeth toward rear of shaft and slide gear on shaft.

Install lock pin in fourth speed gear (fifth on overdrive units). Place thrust washer on shaft and install bushing on shaft. Position fourth (or fifth) speed gear with shortest teeth toward front end of shaft. Install gear on bushing.

Install mainshaft synchronizer gear on mainshaft and secure with snap ring in shaft groove. Check snap ring for proper thickness by testing third speed gear end play. Snap rings are available in .002″ steps each to obtain desired end play of .006 to .008″.

Position second speed gear with shift fork groove toward rear of shaft and slide gear on shaft.

Main Drive Gear—Install bearing on shaft. Install lock nut and tighten securely to seat bearing against gear shoulder. Install snap ring in bearing groove. Lubricate mainshaft pilot bearing and place it in main drive gear bore.

Installation in Case

Countershaft—Install snap ring on countershaft front bearing and tap bearing into case. Lower countershaft in case and insert shaft into front bearing. Install new gasket on rear bearing retainer and tap rear bearing and retainer assembly into case and on countershaft. Install retainer cap screws and lock washers and tighten securely. Install countershaft front bearing lock plate and secure screws with lock wire. Install front bearing retainer, using a new gasket, and tighten securely.

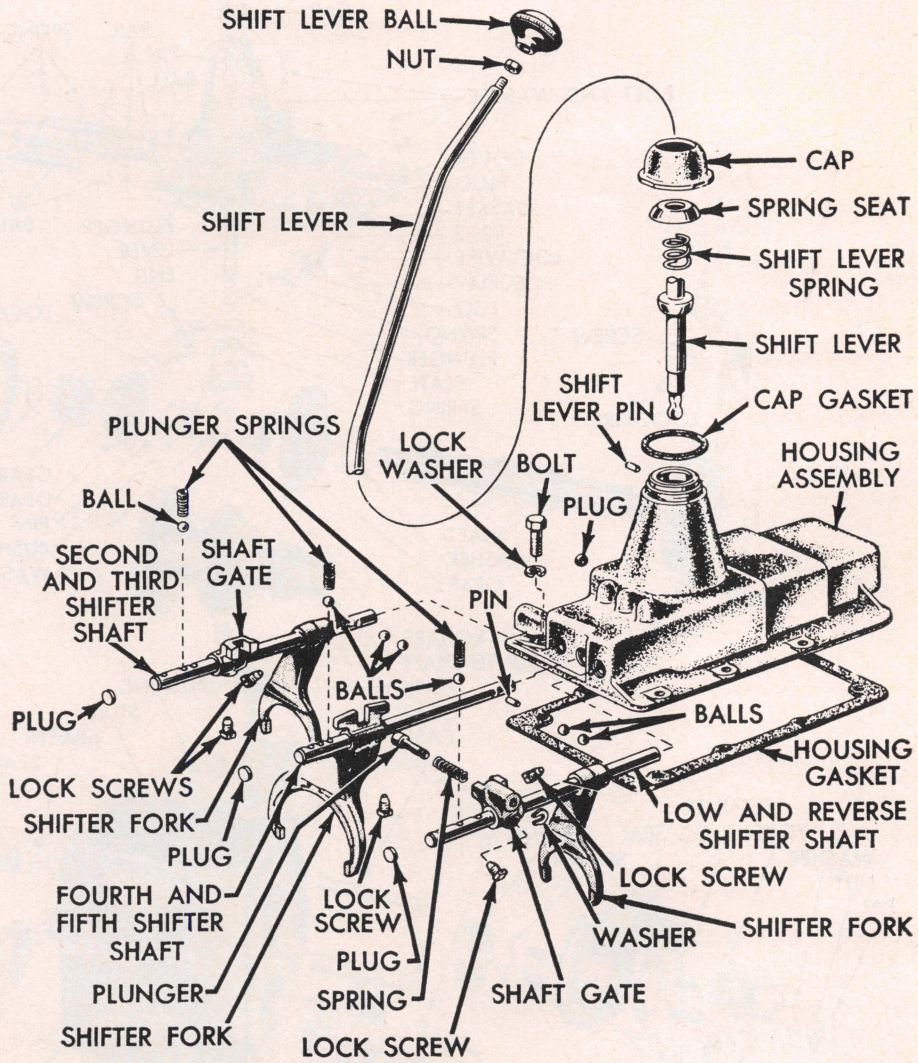

Fig. 2 New Process 245 and 275 gearshift housing

Reverse Idler Gear—Place gear in position and tap shaft through case and gear until notch in shaft is flush with rear face of transmission case. Install shaft lock plate.

Mainshaft & Main Drive Gear—Place low and reverse gear in case. Lower mainshaft into case, passing it through low and reverse gear. Then insert shaft through rear of case far enough to install synchronizer parts one at a time on front end of shaft.

Insert main drive gear in case, tapping it with a soft hammer until the bearing snap ring is seated against case. Install main drive gear bearing retainer, using a new gasket, and tighten securely.

Place synchronizer outer stop ring on main drive gear and position front end of mainshaft into pilot bearing. Then install shim pack (as removed) on rear end of mainshaft.

Install snap ring on mainshaft rear bearing. Tap bearing into case until retainer seats against case. Install speedometer gear on mainshaft. Install mainshaft rear bearing retainer, using new gaskets, and tighten securely.

Install companion yoke and nut, tightening nut from 95-135 lbs. ft. torque. Check gears in neutral and in all speeds for free rotation.

Check synchronizer end play by placing feeler gauges diametrically opposite each other. End play should be .040 to .060″; if not within these limits, adjust by removing or adding shims at the rear of the case to obtain the desired result.

With gears in neutral, install a new gasket and install the transmission cover. Tighten cover screws to 30-40 lbs. ft. torque.

Install hand brake and fill transmission with correct amount of lubricant.

SERIES 433, 434, 540, 5400

Service Note

The four speed and five speed transmissions covered in this material are constructed basically in the same manner.

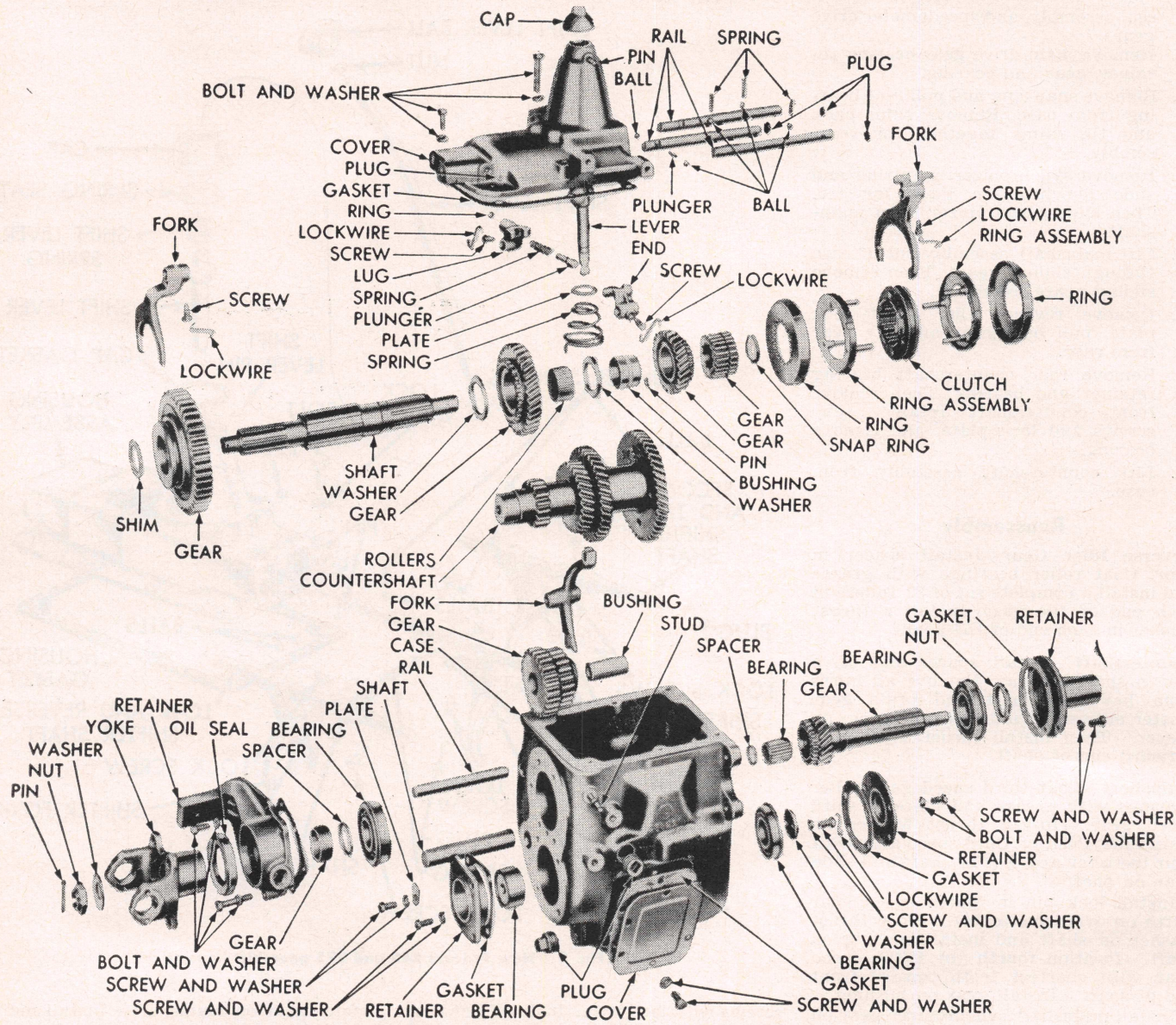

Fig. 3 New Process 420 Series four speed transmissions

The second speed gear and second speed synchronizer inner ring is removed from the mainshaft on five speed units and replaced by a spacer to make up the four speed transmissions.

Disassemble, Fig. 4

1. Remove nut from output shaft.
2. Remove parking brake, universal joint spline flange and parking brake drum.
3. Remove gearshift housing.
4. Remove power take-off covers and gaskets.
5. Remove speedometer driven gear and bearing from output shaft bearing retainer.
6. Remove output shaft bearing retainer and slide speedometer drive gear and spacer from output shaft.
7. Remove input shaft bearing retainer and pull shaft and bearing out through front of case.
8. Slide synchronizer assembly off output shaft and lift shaft out of case.
9. Pull reverse idler gear shaft out of case and lift out gear.
10. Remove countershaft front bearing retainer, unfasten retainer washer and remove washer.
11. Remove bolts from countershaft rear bearing cap. Tap countershaft toward rear of case until bearing cap and bearing is forced out of case.

Disassemble Sub-Assemblies

Clutch Shaft—Remove lock nut from end of shaft and remove bearing. Remove snap ring from shaft bore and remove output shaft pilot bearings. Remove snap ring from output shaft bearing.

Mainshaft—The following procedure applies to the five speed transmission. The four speed transmission is disassembled in a similar manner except name of parts will not agree with the following procedures.

Slide low and reverse gear and 2nd speed gear from shaft. Remove snap ring and remove 4th and 5th gear synchronizer hub. Slide 4th speed gear (5th gear on overdrive units) and thrust washer from shaft. Remove bushing from gear and lock pin from bushing.

Slide off 3rd speed gear and thrust washer and remove bearing rollers from gear. Separate synchronizer parts and inspect for wear or damage. Reassemble with new parts as necessary.

Countershaft — Remove thrust washer from front end of countershaft. Press gear cluster off shaft and drive key from shaft slot.

Reverse Idler Gear—Some models of these transmissions are equipped with a

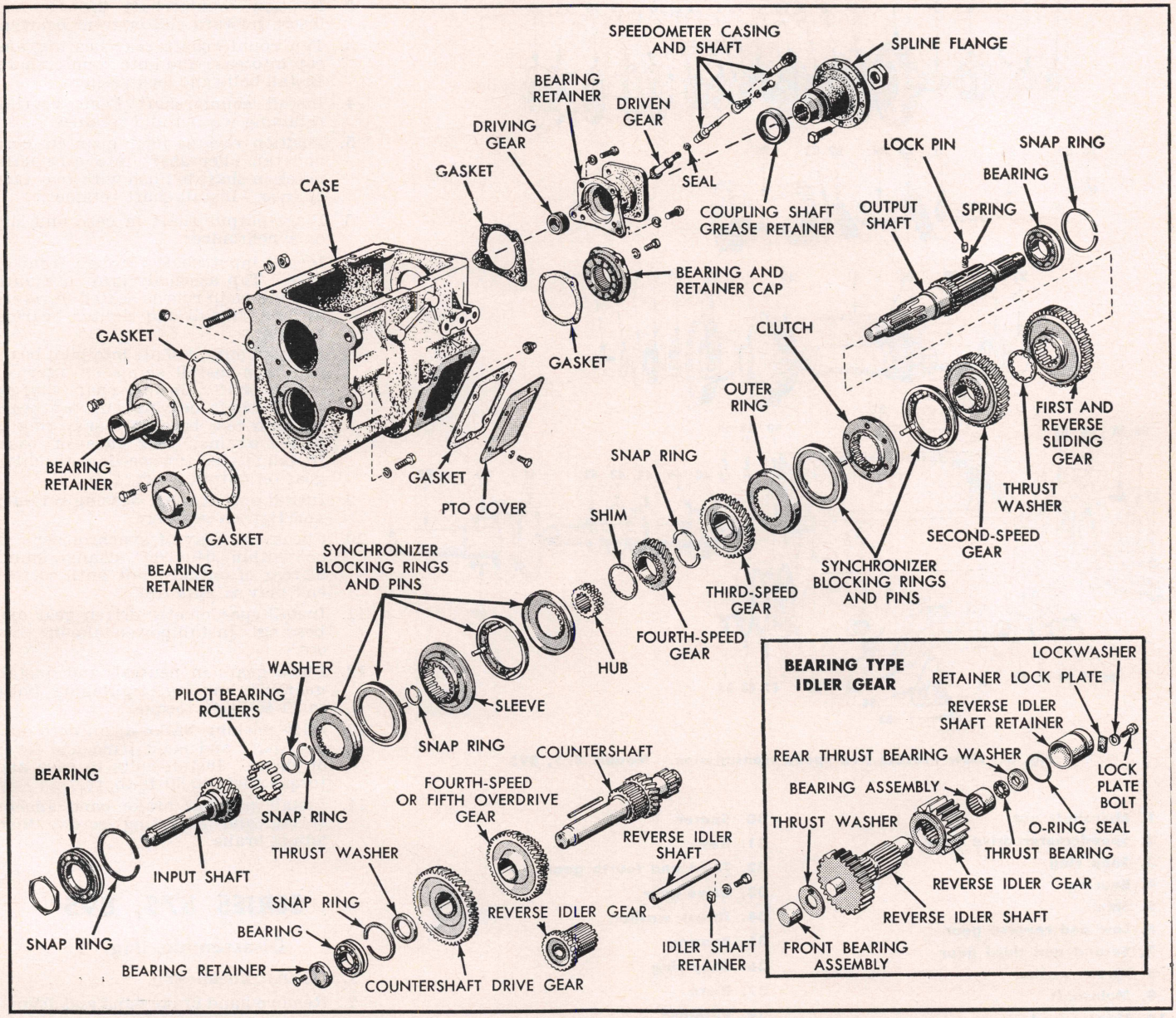

Fig. 4 New Process 540 and 5400 Series five speed transmissions. Series 433 and 434 four speed transmissions are basically the same. In order to make up the four speed units, the second speed gear and second speed synchronizer inner ring are omitted from the mainshaft on five speed units and replaced by a spacer.

bushing type reverse idler gear, whereas others have roller bearing type gear. Remove thrust washers from bore of gear and remove bearing rollers and spacer (if equipped).

Assemble Sub-Assemblies

Reverse Idler Gear—If roller bearings are used, install spacer in gear. Coat bearing rollers with grease and install 31 rollers in each end of gear. Install washer at each end of gear next to rollers.

Countershaft — Install spacer on shaft and key in slot. Press gear cluster on shaft until gear is seated against spacer. Position thrust washer on forward end of shaft.

Mainshaft—The following procedure is for five speed transmissions although four speed units are similar (see Fig. 4). Coat 3rd speed gear rollers with lubricant and install rollers in bore of gear. Place thrust washer on shaft and slide gear on shaft with spur gear teeth toward rear.

Install lock pin in 4th speed gear bushing (5th speed gear on overdrive units). Place thrust washer on shaft and install bushing. Install gear on bushing with shorter teeth toward front.

Position clutch gear on shaft and install snap ring in shaft groove. Check 3rd speed gear end play. If not within .006-.008", replace snap ring with one of the proper thickness to give correct end play.

Position 2nd speed gear on shaft with shift fork groove toward rear. Install low and reverse gear on shaft with shift fork groove toward front of shaft. Assemble synchronizer as shown in Fig. 3.

Input Shaft — Install bearing on shaft. Install lock nut and tighten until bearing is firmly seated against gear shoulder. Install snap ring in shaft bearing groove.

Coat pilot bearing rollers with grease and install in bore of input shaft. Secure bearings with snap ring.

Installation in Case

1. Install snap ring on countershaft front bearing and tap bearing into case.

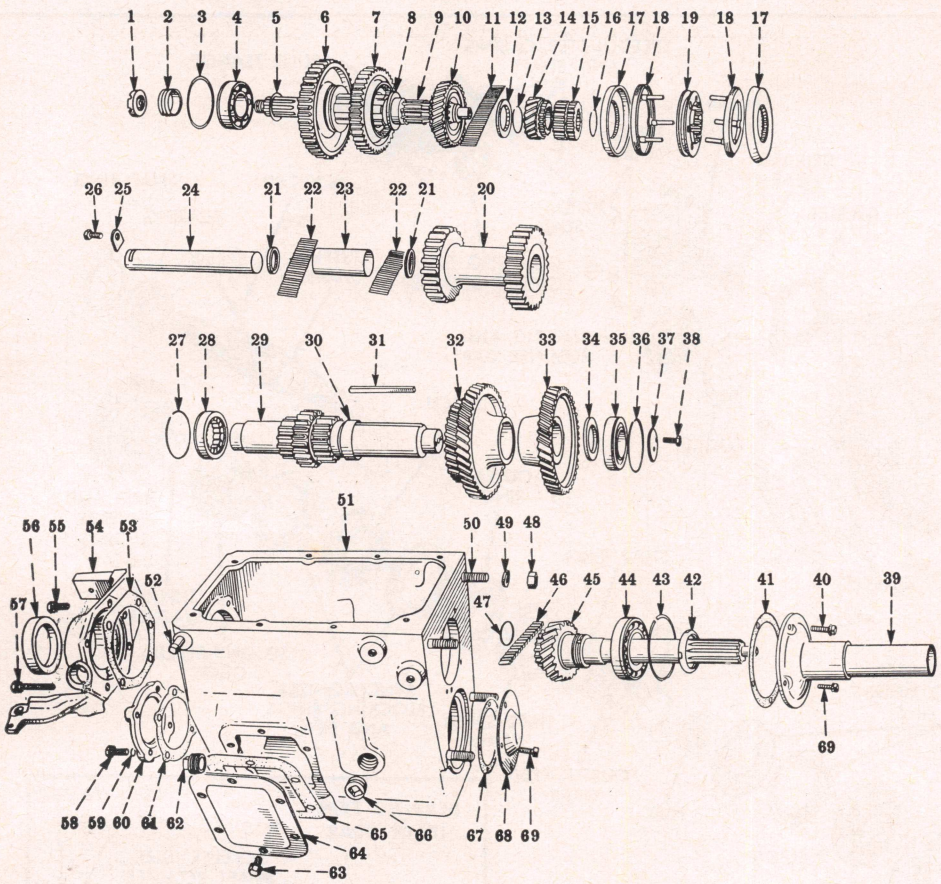

Fig. 5 New Process five speed transmission. Models 875, 895

1. Mainshaft nut
2. Speedometer drive gear
3. Snap ring
4. Bearing
5. Shim
6. Low and reverse gear
7. Second and third gear
8. Thrust washer
9. Mainshaft
10. Third speed gear
11. Bearing
12. Thrust washer
13. Snap ring
14. Overdrive gear
15. Synchronizer clutch gear
16. Snap ring
17. Synchronizer ring
18. Synchronizer ring
19. Synchronizer clutch
20. Reverse idler gear
21. Spacer
22. Bearing
23. Spacer
24. Reverse idler shaft
25. Lock
27. Snap ring
28. Bearing
29. Countershaft
30. Spacer
31. Key
32. Third and fourth gear
33. Drive gear
34. Thrust washer
35. Bearing
36. Snap ring
37. Plate
39. Retainer
41. Gasket
43. Snap ring
44. Bearing
45. Main drive gear
46. Bearing
47. Spacer
51. Case
53. Gasket
54. Retainer
56. Seal
60. Bearing cover
61. Gasket
62. Drain plug
64. Cover
65. Gasket
66. Plug
67. Gasket
68. Cover

2. Position countershaft in case and insert forward end in front bearing.
3. Tap countershaft rear bearing and cap into case and onto countershaft. Install bolts and lockwashers.
4. Install countershaft front bearing retaining washer and retainer.
5. Position reverse idler gear in case and tap idler shaft into case until notch in shaft is flush with rear face of case. Install shaft retainer.
6. Place output shaft in case and slip on synchronizer.
7. Install input shaft through front of case. Tap assembly into case until bearing snap ring is seated in recess in case. Install and tighten bearing retainer.
8. Position output shaft into pilot bearing, then install shims on rear of output shaft. Install snap ring on output shaft bearing and tap bearing into case bore until snap ring is seated against rear face of case. Install spacer and speedometer drive gear on output shaft.
9. Install output shaft bearing retainer and tighten securely.
10. Check end play of synchronizer. If not within .040-.060", change shims at rear of output shaft until correct end play is obtained.
11. Install speedometer driven gear and bearing. Install power take-off covers.
12. Place gears in neutral and install gearshift housing, tightening bolts to 30-40 lb. ft. torque.
13. Slide parking brake drum onto output shaft and place band and lever on drum. Install bolts to case and torque them to 30-40 lb. ft.
14. Install parking brake band anchor spring and adjusting screw, then adjust brake.

SERIES 875, 895

Disassemble, Fig. 5

1. Drain transmission.
2. Remove hand brake band and drum.
3. Remove transmission control housing.
4. Remove mainshaft rear bearing retainer, noting the number of gaskets present.
5. Remove oil seal and speedometer drive gear.
6. Remove main drive gear bearing retainer, noting the number of gaskets used.
7. Remove main drive gear.
8. Tap mainshaft to rear until rear bearing is free of case.
9. Remove synchronizer.
10. Use puller to remove bearing from rear of mainshaft. Remove shims and note number used as they control floating clearance of synchronizer.
11. Lift mainshaft assembly from case.
12. Remove reverse idler gear shaft from rear of case and lift out reverse idler gear.

13. Remove front and rear countershaft bearing covers, and bearing retainer plate from end of countershaft.
14. Tap front end of countershaft toward rear of case until rear bearing is free of case. Then lift countershaft and gear assembly out of case.

Reassembly

1. Install reverse idler gear assembly in case before installing countershaft gear assembly. This will permit clearance for removal of pilot shaft used to assemble bearings in idler gear.
2. A wood pilot shaft or a discarded idler gear shaft cut to a length of five inches may be used to facilitate assembling bearings in reverse idler gear. Diameter of wood pilot shaft should be $1\frac{1}{16}$".
3. A bench assembly of the reverse idler gear and bearings should be made before installing in case. Position pilot shaft and long spacer in idler gear. Insert 31 needle bearings and short spacer between pilot shaft and idler gear. Insert 31 needle bearings and short spacer in same manner at opposite end of idler gear. Position gear and bearing assembly in case. Push shaft flush against pilot shaft, permitting pilot to be removed from gear. Remove pilot shaft from inside of case.
4. The mainshaft third speed gear bearing consists of 50 individual needle bearings. To assemble bearings, position thrust washer and third speed gear on mainshaft. Insert each needle bearing between gear and mainshaft.
5. Select a snap ring of correct thickness that will provide proper running clearance of mainshaft third speed gear. Snap rings are available in three thicknesses (.090", .093", .096") for this purpose.
6. Select a snap ring for securing the clutch gear that will hold the gear tight against the shoulder on mainshaft. Four thicknesses (.087", .090", .093", .096") are available for this purpose. To check for the thickness required temporarily install the synchronizer clutch gear on the mainshaft before installing the overdrive gear and third speed gear. Insert snap ring in groove on mainshaft and check the gear for tightness.
7. The main drive gear bearing lock nut should be tightened sufficiently to seat bearing against gear shoulder.
8. Like parts of the synchronizer assembly are interchangeable. Preassembling of this unit before installing on the mainshaft is not required since parts may be installed individually.
9. Check and replace all thrust washers showing signs of excessive wear.
10. The mainshaft front and rear bearing retainers fit or end play for their respective bearing is controlled by gaskets. Install bearing retainers and cap screw, check clearance between each retainer and case with a feeler gauge. Then select a gasket or gaskets about .005" thicker than the clearance between retainer and case. Remove retainer, install selected gasket or gaskets and retainer. This will give a satisfactory condition as to bearing end play and sealing of transmission.

SPICER TRANSMISSIONS

INDEX & LUBE CAPACITY

Model	Speeds	Oil, Pts.	Page
3152, 3153	5	12	141
4452, 4453	5	14	141
4652	5	13	141
4756	5	13	141
4952, 4953	5	14	141
5531	3 Aux.	7	150
5552, 5553	5	9	141
5652	5	13	141
5753	5	13	141
5756	5	13	141
5831	3 Aux.	4	143
6031	3 Aux.	10	154
6041	4 Aux.	8	151
6231	3 Aux.	8	154
6252, 6253	5	23	142
6352	5	17	142
6452, 6453	5	17	142
6456, 6458	5	17	142
6852, 6853	5	17	142
6854	5	17	142
7231	3 Aux.	8	143
7751, 7851	5		146
8031, 8035	3 Aux.	12	154
8041, 8045	4	16	148
8051, 8052	5	24	149
8054, 8055	5	24	149
8125	12	28	156
8245	4	16	148
8251, 8255	5	24	149
8341, 8345	4 Aux.	12	145
8445	4	16	148

3000, 4000 & 5000 SERIES

Five Speed Synchronized Type, Figs. 1 and 2

1. To disassemble, remove gearshift housing.
2. Remove brake drum, spline flange, brake shoe, mainshaft rear bearing retainer, speedometer drive gear and spacer.
3. Remove countershaft rear bearing retainer and nut.
4. Remove left side power take-off cover.
5. Use puller to remove reverse idler shaft.
6. With hard wood block against front side of second speed gear, drive mainshaft toward rear until rear bearing is free of case. Remove snap ring and bearing.
7. Slide first speed gear off as mainshaft is removed from case.
8. Remove input shaft from case.
9. Remove countershaft rear bearing.
10. Work countershaft toward rear until it clears front bearing and lift assembly out of case.
11. Remove countershaft front bearing retainer and tap bearing out of case.
12. Remove reverse idler gear.

Assemble Mainshaft

1. Place 2nd speed gear on output shaft with clutch teeth toward front.
2. Install two Woodruff keys in mainshaft. Then press 2nd-3rd synchronizer clutch gear on mainshaft.
3. Place 2nd-3rd speed synchronizer, 3rd gear and 3rd gear sleeve on mainshaft. Press sleeve onto shaft until it bottoms on synchronizer clutch gear. *Third speed gear slots must line up with Woodruff keys in mainshaft.*
4. Install snap ring at front of 3rd gear sleeve.
5. Install 4th gear, thrust washer and snap ring on mainshaft.
6. Install 4th-5th synchronizer.

Assemble Transmission

1. Tap countershaft front bearing into case. Install bearing retainer with new gasket. Line up oil holes in retainer, gasket and case, and tighten bolts to 50-55 ft. lbs.
2. Place assembled countershaft in case and start shaft into front bearing. Drive rear bearing onto shaft and into case.
3. Install reverse idler and power take-off cover.
4. Tap input shaft and bearing into case and install mainshaft pilot rollers.
5. Install input shaft retainer without gasket and tighten bolts to bottom retainer on bearing snap ring. Check clearance between retainer gasket surface and case. Use gaskets that will prevent oil leakage and any end play. Install retainer with oil hole in line with gasket and case holes and

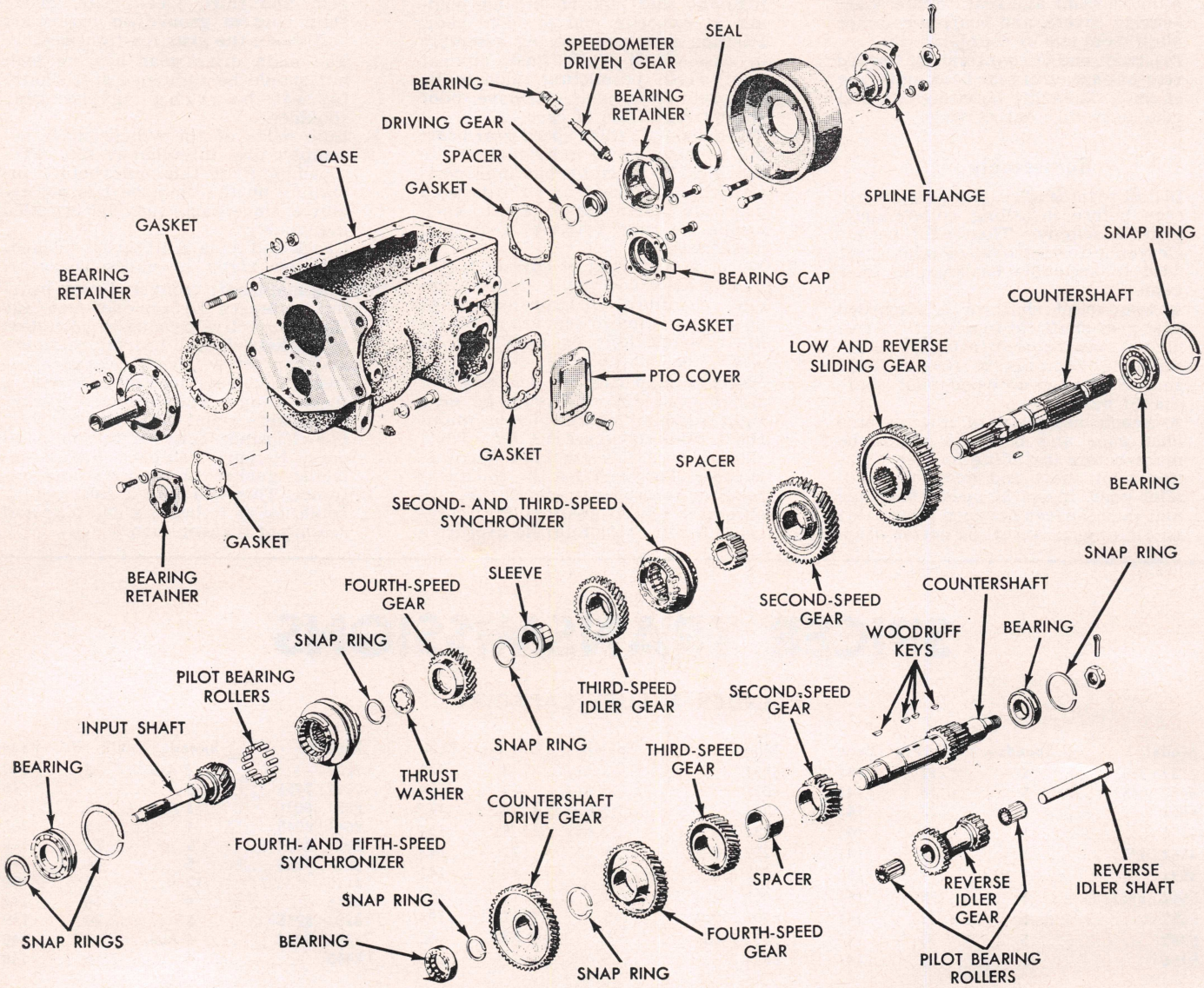

Fig. 1 Spicer 3000, 4000 and 5000 Series five speed synchronized transmissions

tighten retainer bolts to 25-30 ft. lbs.

6. Install low-reverse gear on mainshaft and position assembly in case. Drive mainshaft bearing into position.
7. Install and tighten countershaft nut to 350-450 ft. lbs. Install bearing retainer and torque bolts to 60-70 ft. lbs.
8. Install new seal in mainshaft rear bearing retainer, tightening bolts to 65-75 ft. lbs.
9. Install brake shoe, spline flange and nut, tightening nut to 275-350 ft. lbs.
10. Shift gears into neutral and install gearshift housing, tightening bolts to 35-40 ft. lbs.

6000 SERIES

Five Speed Synchronized Type, Figs. 3 and 4

1. To disassemble, remove gearshift housing.
2. Remove brake drum, spline flange and brake shoe.
3. Remove rear bearing retainers from mainshaft and countershaft. Then remove speedometer drive gear and spacer from mainshaft.
4. Remove countershaft rear nut.
5. Remove reverse idler gear shaft.
6. Using a hard wood block against front side of 2nd speed gear, drive mainshaft toward rear until rear bearing clears case. Remove snap ring and bearing from shaft.
7. Slide low-reverse gear from shaft as mainshaft is removed from case. Remove pilot rollers from input shaft.
8. Remove input shaft from case.
9. Remove snap ring and bearing from rear of countershaft. Slide countershaft toward rear of case until shaft clears front bearing and lift assembly out of case.
10. Remove countershaft front bearing retainer and tap bearing out of case.

Assemble Mainshaft

1. Slide 2nd speed gear and synchronizer clutch gear onto shaft. Install clutch gear retaining snap ring.
2. Slide 2nd-3rd synchronizer onto shaft, and press on 3rd speed gear.
3. Install 4th speed gear sleeve and 4th gear. Position thrust washer and install snap ring. Slide 4th-5th speed synchronizer onto shaft. Then slip low-reverse sliding gear on shaft.

Assemble Transmission

1. Tap countershaft front bearing into case. Install retainer with new gasket, lining up oil holes in retainer, gasket and case. Torque retainer bolts to 25-35 ft. lbs.
2. Start assembled countershaft into front bearing. Drive rear bearing onto shaft and into case.
3. With bearings in reverse idler gear, install gear in case, lining up flat surface on rear end of idler shaft

with position of lock tang on countershaft rear bearing retainer. Drive shaft into position.

4. Position mainshaft assembly in case. With wood block at front end of shaft, drive rear bearing into place.
5. Insert pilot rollers into input shaft, holding rollers with Lubriplate. Last roller must be inserted endwise.
6. Install input shaft and bearing.
7. Lock transmission in two gears and install and tighten countershaft rear bearing nut to 350-450 ft. lbs.
8. Install countershaft rear bearing retainer.
9. Install new oil seal in mainshaft bearing retainer. Place speedometer gear and spacer on mainshaft. Install bearing retainer.
10. Install input shaft retainer without gasket and tighten bolts to bottom retainer on bearing snap ring. Check clearance between retainer gasket surface and case, which should be .010-015". Select gasket pack that will seal oil and also prevent end play at bearing snap ring.
11. Install input shaft retainer with oil hole in line with gasket and case holes and tighten bolts to 25-35 ft. lbs.
12. Install brake shoe assembly, tightening bolts to 180-220 ft. lbs.
13. Install U-joint flange and torque flange nut to 275-350 ft. lbs.
14. Install parking brake drum.
15. With transmission in neutral, install gearshift housing and tighten bolts to 35-40 ft. lbs.

Oil Pump

The oil pump (when used) is bolted to the inner side of the clutch housing. The pump is fitted with a non-adjustable pressure relief valve consisting of a ball and spring held in place by a pipe plug in the side of the oil pump housing.

When assembling the pump, press the drive gear on the shaft so that the distance from the front end of the shaft to the front side of the gear measures $\frac{17}{32}$". This dimension should be maintained to prevent excessive wear on the side of the gear.

Assemble the oil pump driving gear and shaft in the housing. Press the driven gear shaft in the housing and then on the shaft. Assemble the relief valve and spring and install the pipe plug. Position the housing gasket, being sure the oil holes in the case are not covered by the gasket. Fill the oil pump with gear oil and fasten the assembly in place, being sure the oil holes line up.

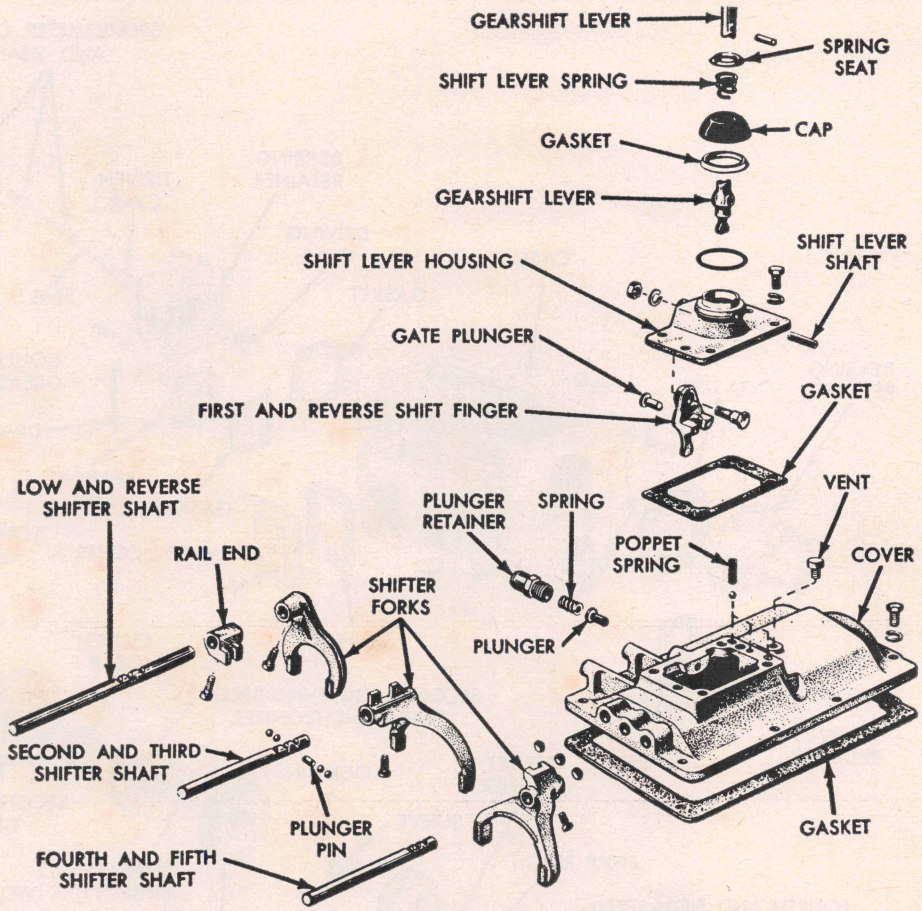

Fig. 2 Spicer 3000, 4000 and 5000 Series gearshift housing

5831 SERIES

Three Speed Auxiliary Type, Figs. 5 and 6

1. To disassemble, remove gearshift housing.
2. Remove input shaft U-joint yoke.
3. Remove flange and brake drum from output shaft.
4. Remove brake shoe assembly.
5. Remove rear mounting bracket.
6. Remove output shaft rear bearing retainer and remove speedometer gear from shaft.
7. Remove input shaft bearing retainer and bearing spacer.
8. Remove countershaft rear bearing cap and shims. Tie shims together for use at reassembly.
9. Tap underdrive gear toward rear until bearing clears case. Pull bearing from shaft. Remove underdrive sleeve and hub through rear bearing bore.
10. Tilt front of output shaft upward and slide it out of case.
11. Remove pilot rollers from input shaft. Remove snap ring and tap input shaft and bearing into case.
12. Drive countershaft toward rear until rear bearing cup is out of case. Remove countershaft front bearing cup from case.

Assembly Notes

After countershaft is assembled, measure clearance between rear bearing cap and case. Then select a shim or shims that will provide .001-.003" end play. When adjustment is satisfactory, torque bolts to 45-55 ft. lbs.

When assembling the output shaft, position direct and overdrive hub with face of hub stamped "X" toward front end of shaft. Install underdrive hub with face stamped "X" toward rear of shaft.

Assemble Transmission

1. With gears in neutral and new gasket on case, place gearshift housing on gasket with outer ends of shift rods toward front of transmission and each shift fork engaged in its proper groove, Fig. 6. Torque housing bolts to 45-50 ft. lbs.
2. Install transmission trunnion, making certain it does not bind on bearing retainer.
3. Install U-joint flange and yoke on input shaft and torque nut to 275-350 ft. lbs.
4. Install transmission mounting bracket and torque bolts to 40-45 ft. lbs.
5. Install brake shoe assembly and rear U-joint flange (and drum) and torque nut to 275-350 ft. lbs.

7231 SERIES

Three Speed Auxiliary Type, Figs. 7 to 10

1. Remove gearshift housing.
2. Remove input shaft yoke.
3. Remove trunnion from front bearing retainer.
4. Remove output shaft flange and brake drum, brake shoe and output shaft bearing retainer.
5. Remove countershaft rear bearing cap and shims. Tie shims together for use at reassembly.

Fig. 3 Spicer 6000 Series five speed synchronized transmission

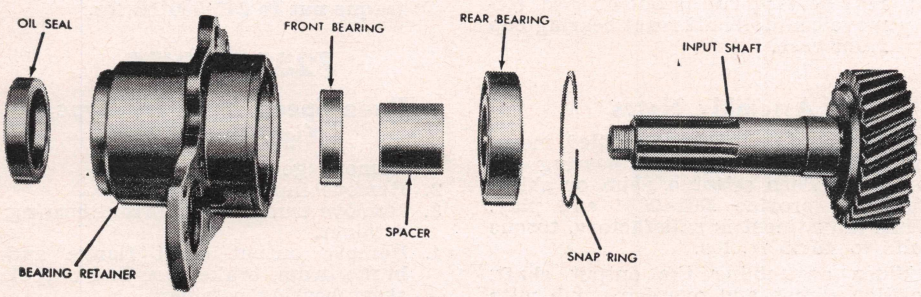

Fig. 7 Series 7231 input shaft parts

6. Remove input shaft assembly.
7. Tap underdrive gear toward rear until rear bearing clears case. Pull bearing off shaft.
8. Remove underdrive sleeve and hub through rear bearing bore and remove output shaft.
9. Drive countershaft toward rear until rear bearing cup clears case. Slide countershaft toward rear and lift out assembly. Remove countershaft front bearing cup.

Assemble Transmission

1. Install countershaft front bearing

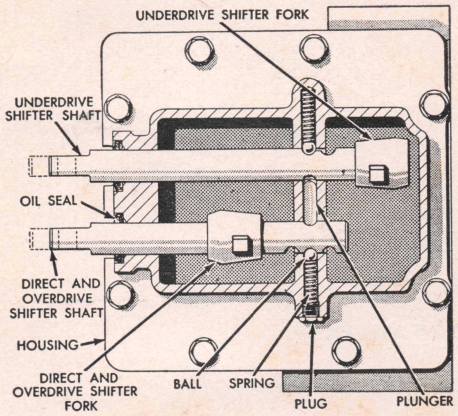

Fig. 6 Spicer 5831 Series gearshift housing

cup. Lower rear end of shaft into rear bearing bore and position shaft in case. Install rear bearing cup.

2. Position countershaft rear bearing cap without shims. Measure clearance between cap and case. Select shims that will provide .001-.003" end play, and tighten bolts.
3. Position output shaft in case and slide hub and underdrive sleeve onto shaft. With rear end of output shaft extended beyond rear of case, drive rear bearing onto shaft. Drive bearing on shaft until it firmly seats in bore.
4. Install new oil seal in output shaft bearing retainer. Install speedometer gear on shaft and install bearing retainer, tightening bolts to 45-50 ft. lbs.
5. Install input shaft and bearing retainer as a unit.
6. Install parking brake shoe and tighten bolts to 180-220 ft. lbs.
7. Install output shaft flange and tighten nut to 275-350 ft. lbs. If brake drum was removed, install it and tighten nuts to 70-75 ft. lbs.
8. Install trunnion but do not tighten bolt. Position input shaft yoke on shaft, install nut and torque to 275-350 ft. lbs.
9. Install gearshift housing.

8341, 8345 SERIES

Four Speed Auxiliary Type, Figs. 11 to 14

1. Remove gearshift housing.
2. Remove flange (and drum) from output shaft.
3. Remove input shaft U-joint flange and dust deflector.
4. Remove trunnion and front bearing retainer cap.
5. Remove lockwashers from retainer cap bolts and reinstall cap. Then after removing bolts from retainer, use puller to remove retainer and front bearing. Remove cap and tap bearing out of retainer.
6. Remove brake shoe, output shaft bearing retainer, speedometer drive gear and 1st speed gear spacer washer.

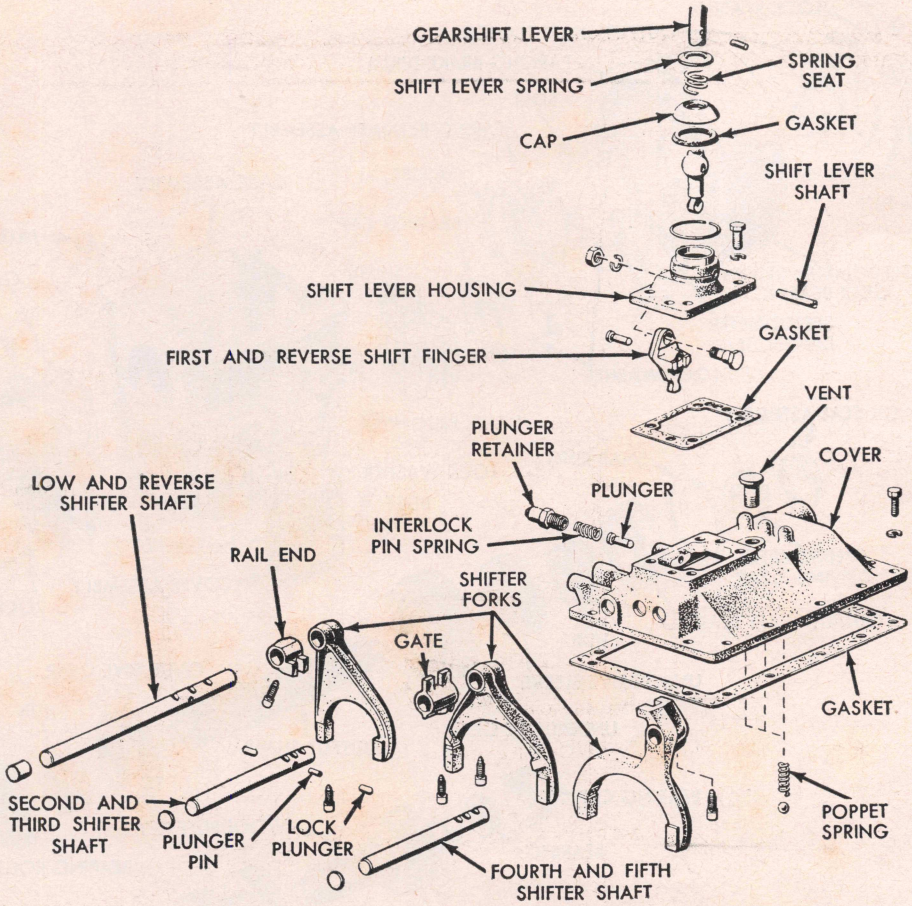

Fig. 4 Spicer 6000 Series gearshift housing

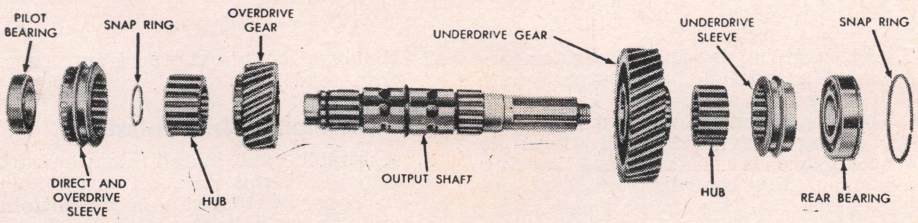

Fig. 8 Series 7231 output shaft parts

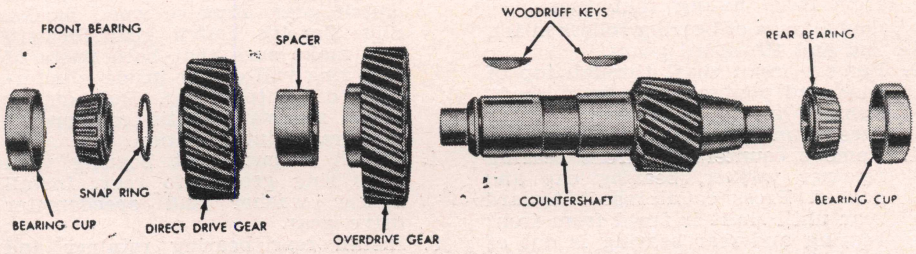

Fig. 9 Series 7231 countershaft parts

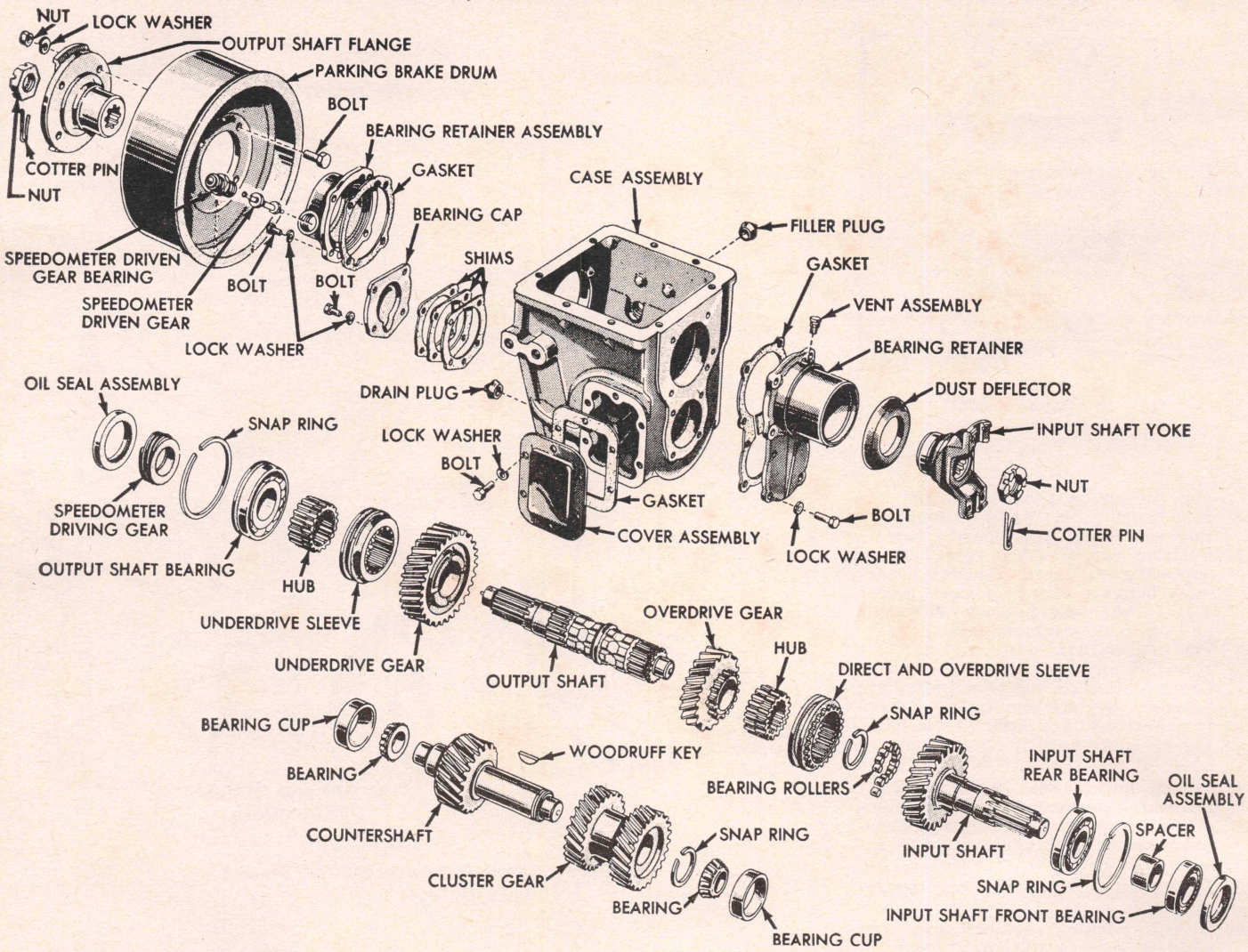

Fig. 5 Spicer 5831 Series three speed auxiliary transmission

7. After sliding input shaft as far forward as possible, tap output shaft forward to start shaft out of its bearing. Then slide output shaft and bearing rearward until there is clearance for a standard bearing puller. Pull bearing from shaft and remove 1st gear thrust washer.
8. Place two 1″ thick wood blocks between input shaft and 3rd-4th clutch gear. Press output shaft forward until clutch gear lock ring is exposed. Remove two machined halves and wood blocks.
9. Pull output shaft out through rear of case. Remove output shaft parts from case, noting that there are double rows of bearing rollers in 1st, 2nd and 4th speed gears.
10. Remove input shaft through top of case and pilot bearing from shaft. Remove sleeve and inner bearing race from shaft.
11. Remove countershaft front bearing retainer washer, bearing cap and gasket. Press countershaft toward rear until shaft is freed from front bearing and rear bearing is out of case. Remove bearing from shaft and front bearing from case.
12. Remove countershaft from case, front end first.

Assemble Transmission

1. Assemble and install countershaft in case, being sure oil drain hole in rear bearing cap is at bottom and torque bolts to 45-50 ft. lbs.
2. Assemble and install input shaft in case.
3. Assemble and install output shaft components in case. Then with two 1″ thick wood blocks between input shaft and 3rd-4th clutch gear, press output shaft forward until shaft lock ring groove is beyond 3rd-4th clutch gear. Remove wood blocks. Slide 3rd-4th clutch gear forward and make sure that both parts of lock ring will center inside counterbore of clutch gear. Pull output shaft rearward until components are drawn into position.
4. Install output shaft bearing with snap ring groove to rear. Install spacer washer and speedometer drive gear.
5. Install rear bearing retainer and torque bolts to 65-75 ft. lbs. Install brake shoe assembly, output shaft flange and drum and torque nut to 275-350 ft. lbs.
6. Install input shaft bearing retainer and gasket, tightening large bolts to 75-100 ft. lbs. and small ones 25-30 ft. lbs. Install front bearing in retainer. Install bearing cap and gasket. Torque bolts to 40-50 ft. lbs.
7. Install trunnion with finished surface toward front and torque bolt to 50-55 ft. lbs.
8. After positioning dust deflector, install input shaft flange, tightening nut to 275-350 ft. lbs.
9. After aligning shift forks with clutch sleeves, install shift cover and gasket and torque nuts and bolts to 45-50 ft. lbs.

SERIES 7751, 7851

Fig. 15

1. Remove transmission cover.
2. Remove universal flange.
3. Unfasten retainer cap from rear of transmission case and remove speedometer drive gear and rear bearing retainer.

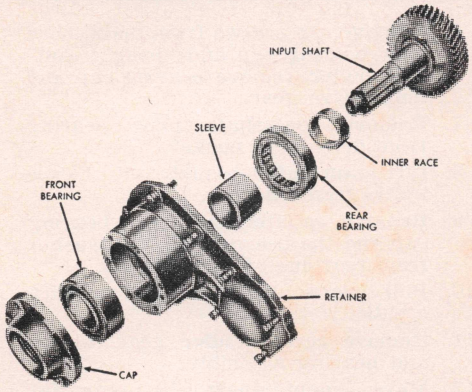

Fig. 11 Spicer 8341 Series input shaft parts

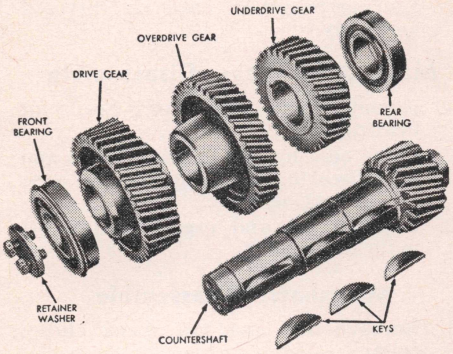

Fig. 13 Spicer 8341 Series countershaft parts

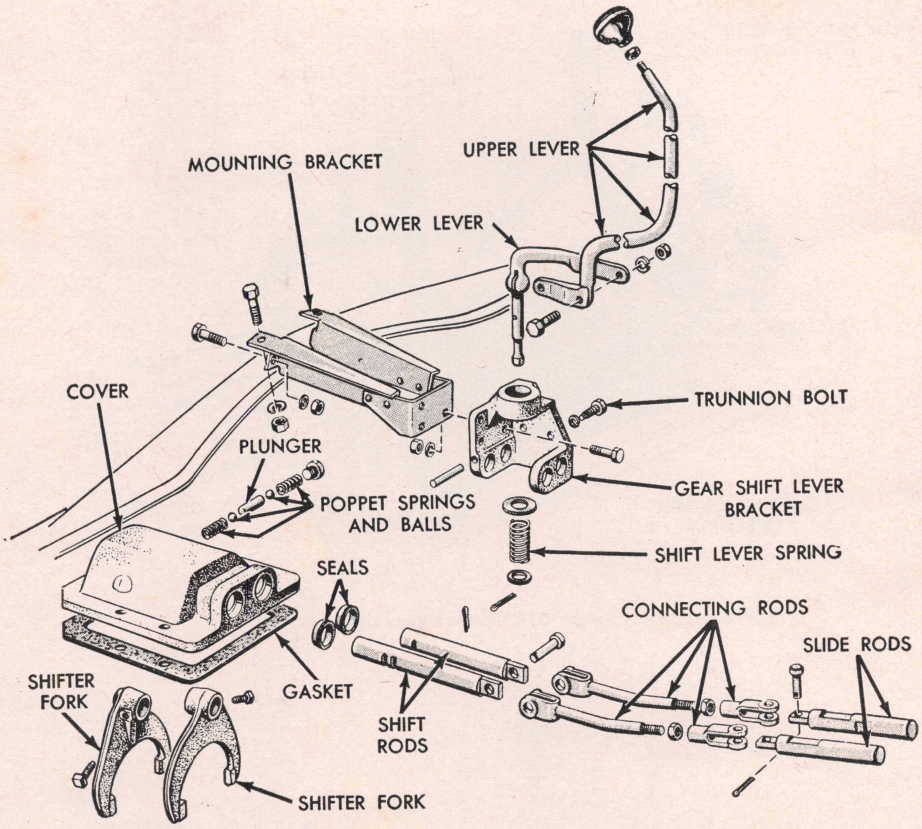

Fig. 10 Spicer 7231 Series gearshift housing

4. Pull overdrive shift shaft out through rear and lift out fork.
5. Remove overdrive housing countershaft cover and unscrew lock bolts that retain overdrive gears to countershaft.
6. Reach into overdrive housing and remove bolts which fasten this housing to main case.
7. Pull overdrive housing and gears to rear and force rear bearing from mainshaft.
8. Push mainshaft to rear until intermediate bearing is free of case.
9. Tilt mainshaft and lift assembly out through top.
10. Remove bell housing and main drive gear bearing cap.
11. Unscrew nut from main drive gear shaft and push drive gear into case and lift it out.
12. Remove snap ring from front end of countershaft.
13. Push countershaft to rear until bearing is free of case, then lift countershaft out through top.
14. Push out reverse idler shaft and lift out gear.
15. To disassemble the mainshaft, slip off sliding gear and clutch sleeve. Unscrew clutch gear retaining nut and strip mainshaft, being careful not to lose any of the bearing rollers.
16. Reverse the above procedure to assemble the transmission.

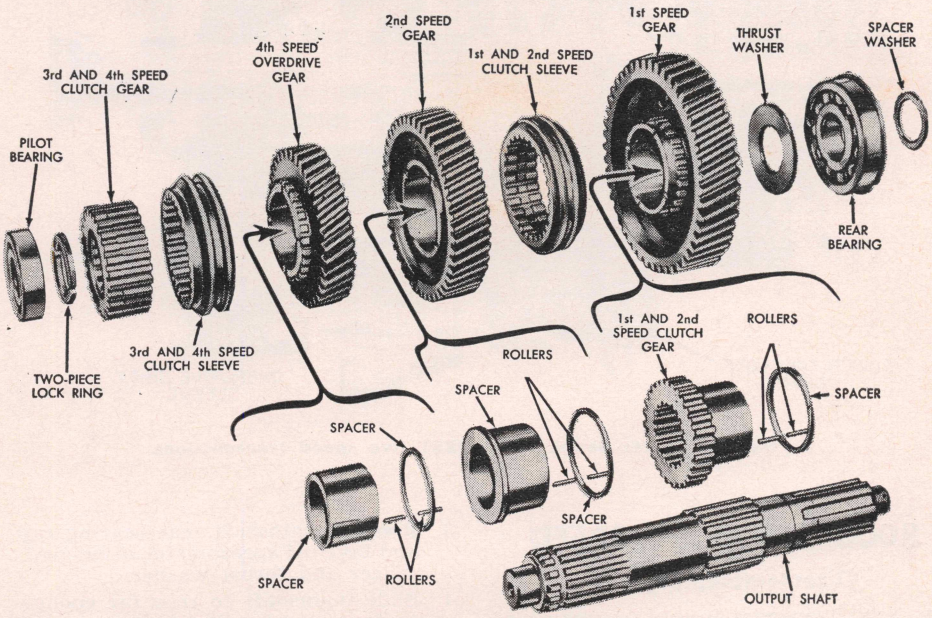

Fig. 12 Spicer 8341 Series output shaft parts

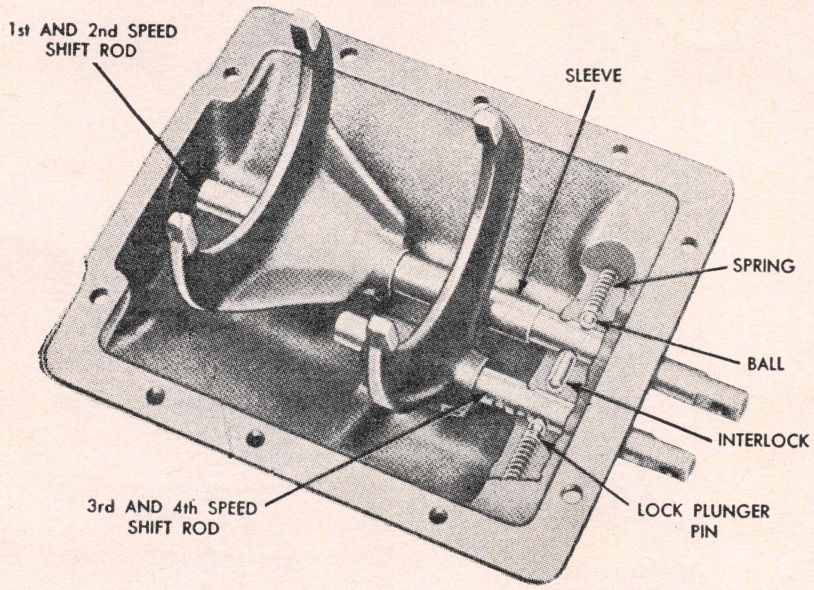

Fig. 14 Spicer 8341 Series gearshift housing

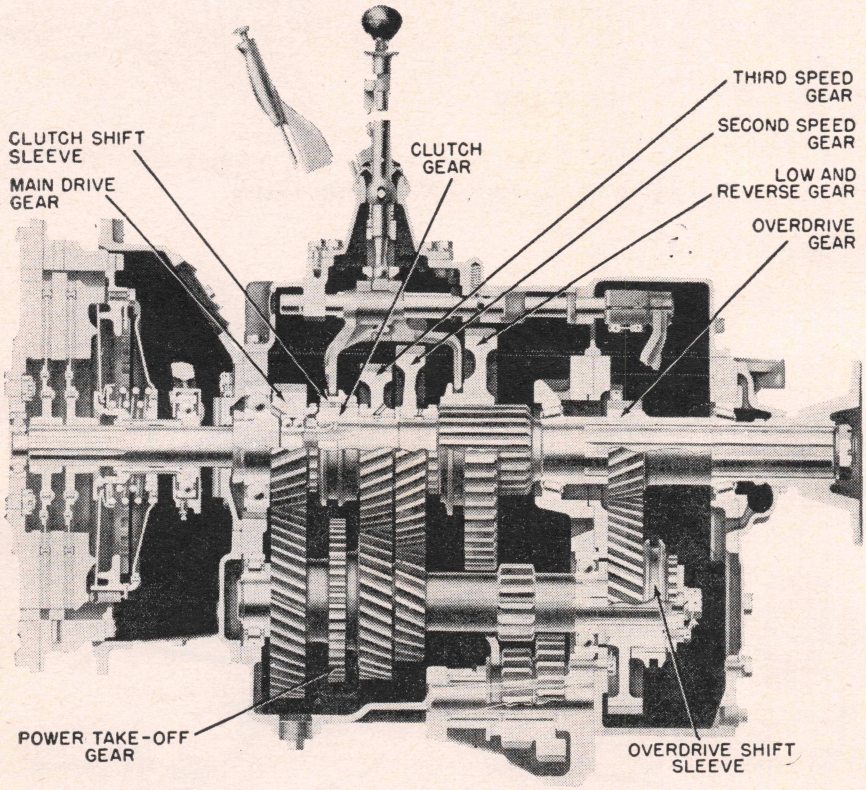

Fig. 15 Spicer Series 7751, 7851 five speed transmissions

8000 SERIES, 4 SPEED

Disassemble, Fig. 16

1. Shift transmission into reverse gear, remove cover screws and lift off shift cover.
2. Remove nut and pull off companion flange.
3. Remove mainshaft rear bearing cap and take off speedometer drive gear, spacer and thrust washer.
4. Slide mainshaft to rear far enough to free rear bearing from case and use a suitable puller to remove bearing.
5. Remove clutch release yoke and shafts.
6. Remove cap screws from main drive gear bearing cap and, using a suitable puller, remove bearing cap and main drive gear.
7. Remove mainshaft pilot bearing from drive gear pocket.
8. Lift mainshaft assembly out of case by its front end.
9. Remove countershaft rear bearing cap and the bearing retainer washer from rear end of countershaft.
10. Pull reverse idler gear shaft out with a puller.
11. Remove reverse idler gear, sleeve and bearing assembly.
12. Move countershaft to rear far enough to free rear bearing from case. Then use puller to remove bearing.
13. Slide countershaft to rear until front bearing is out of case and lift out assembly.

Main Drive Gear, Disassemble

1. Remove snap ring from inside of bearing cap.
2. Place bearing cap in arbor press and push bearing and main drive gear out of bearing cap.
3. Remove nut and press bearing off main drive gear.

Mainshaft, Disassemble

1. Remove 3rd and 4th speed clutch collar.
2. Remove low speed gear, being careful not to lose any of the needle bearings.
3. Remove low and 2nd speed clutch gear.
4. Remove 3rd and 4th speed clutch gear snap ring.
5. Place mainshaft assembly in arbor press with rear end down and press mainshaft through gears. Use care to see that none of the needle bearings and 3rd speed gear lock balls are lost as they fall out.

Countershaft, Disassemble

1. Use puller to remove front bearing.
2. Remove countershaft drive gear snap ring.
3. Place assembly in arbor press and press countershaft through gears.

Mainshaft, Disassemble

1. Coat inside bore of low speed gear with heavy grease. Then place two rows of needle bearings (72 per row) on inside of low speed gear with spacer between rows.
2. Assemble needle bearings in 2nd and 3rd speed gears in same manner.
3. Place mainshaft in vise with rear end down.
4. Place 2nd speed gear on mainshaft with clutch teeth to rear.
5. Place 3rd speed gear sleeve on mainshaft with flanged end of sleeve toward rear. Line up two notches on inside of sleeve with mainshaft splines. Place two sleeve lock balls in notches of sleeve and press sleeve on mainshaft.
6. Place 3rd speed gear on mainshaft with clutch teeth to front.
7. Place 3rd and 4th speed clutch gear

on mainshaft with hub of gear toward front and press in place. Then lock assembly with a new snap ring.

8. Place 3rd and 4th speed clutch collar on clutch gear with longer hub to rear.
9. Take mainshaft from vise and place low and 2nd speed clutch gear with shift fork collar to rear.
10. Place low speed gear on mainshaft with clutch teeth to front.
11. Grease one side of low speed gear thrust washer and place its greased side against low speed gear.

Transmission, Assemble

Reassembly of the transmission is largely the reverse of the disassembly procedure. However, the following should be noted:

1. Place reverse idler gear and sleeve in case with shift fork collar to rear of case.
2. Make sure flat on rear end of reverse idler shaft is lined up so countershaft rear bearing cap will lock shaft in place.
3. Main drive gear bearing cap is marked "Top" and should be so installed.
4. Be sure mainshaft rear bearing cap and gasket are installed with oil drain holes lined up.

8000 SERIES, 5 SPEED

Disassemble, Fig. 17

1. Shift transmission into reverse.
2. After removing cap screws, lift cover and shift forks off transmission.
3. Remove nut and pull off companion flange.

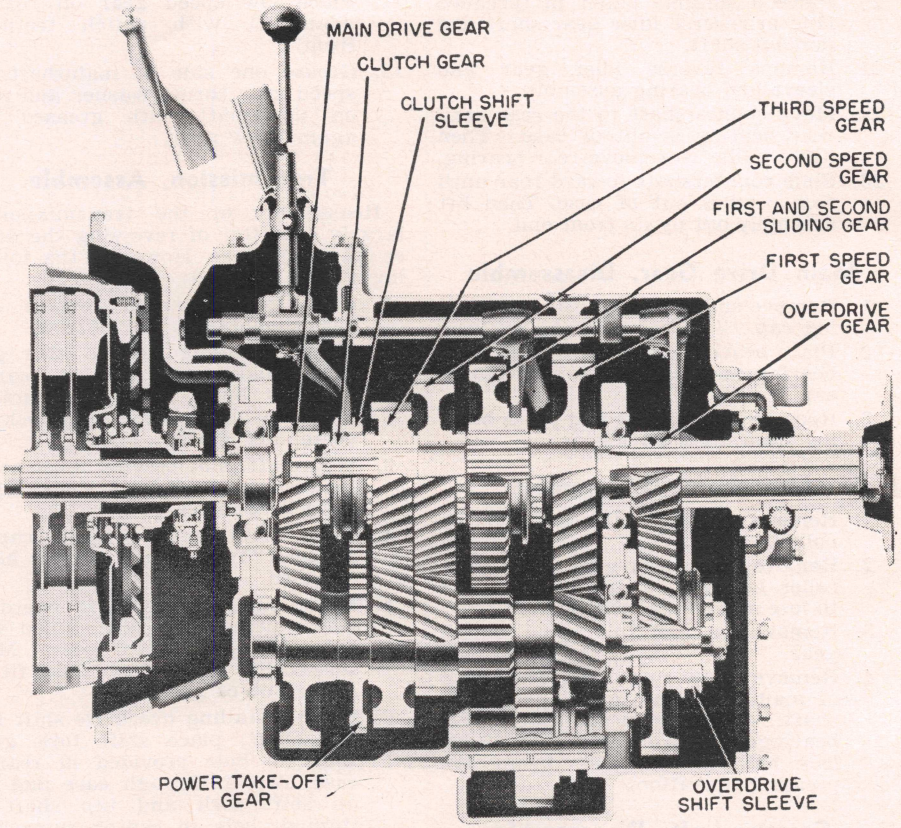

Fig. 17 Spicer 8000 Series five speed. Some models have double row ball bearing at rear of mainshaft

4. Remove mainshaft rear bearing cap.
5. Remove speedometer drive gear or spacer from mainshaft.
6. Slide mainshaft to rear until rear bearing is free of case. Then use a suitable puller to remove bearing.
7. Remove overdrive gear lower shift fork guide shaft and remove shift fork.
8. Remove transmission rear end cover.
9. Remove overdrive gear and bearing spacer from mainshaft.
10. Remove nut from rear end of countershaft and use a suitable puller to remove overdrive sleeve.
11. Remove countershaft overdrive gear and shift collar.
12. Slide mainshaft toward rear to bring center roller bearing out of case far enough to get a puller or "C" clamp on the outside diameter of the bearing. Then tap rear end of mainshaft toward front which will move bearing off shaft.
13. Loosen bearing puller or "C" clamp and slide mainshaft back and get another hold on center mainshaft roller bearing and again tap mainshaft forward as far as possible.
14. Repeat this procedure until center roller bearing is out of case and off mainshaft.
15. Remove clutch release yoke and shafts.
16. Remove cap screws from main drive gear bearing cap and with a suitable puller remove cap and main drive gear out of case, using the two puller screw holes provided.
17. Remove main drive gear pilot bearing from mainshaft.
18. Tilt front end of mainshaft upward and lift assembly out of case.
19. Remove cap screws and take off countershaft rear bearing retainer and thrust washer.

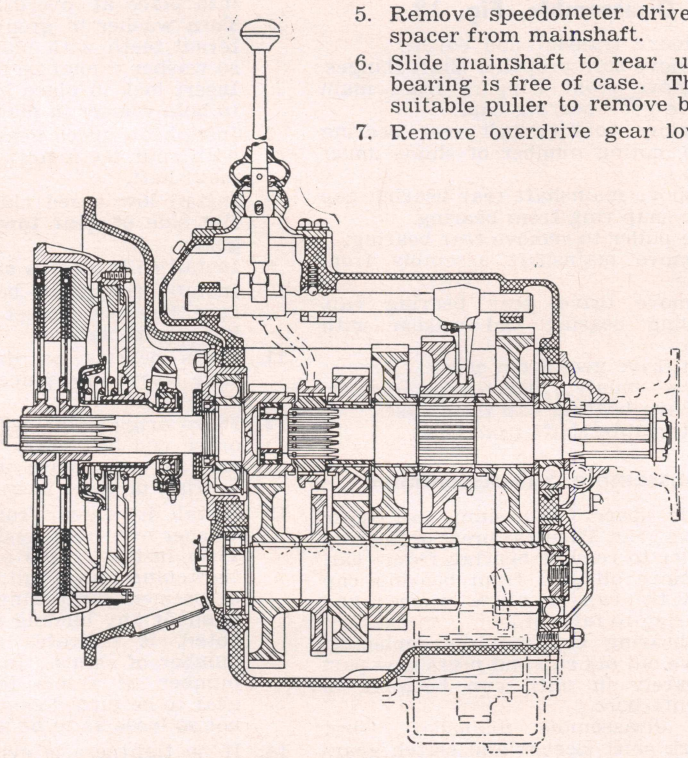

Fig. 16 Spicer 8000 Series four speed transmissions

20. Place a suitable puller in threaded hole in reverse idler gear shaft and pull out shaft.
21. Remove reverse idler gear and sleeve and bearing assembly.
22. Move countershaft to the rear until rear bearing is out of case. Then use a puller to remove rear bearing.
23. Slide countershaft toward rear until front end is out of case. Then lift assembly out by its front end.

Main Drive Gear, Disassemble

1. Remove snap ring on inside of bearing cap.
2. Place bearing cap in press and push bearing and main drive gear out of cap.
3. Remove bearing nut and press bearing from main drive gear.

Mainshaft, Disassemble

1. Remove 3rd and 4th speed clutch collar.
2. Remove low speed gear and needle roller bearings, being careful not to lose any of the rollers.
3. Remove low and 2nd speed clutch gear.
4. Remove snap ring from front end of mainshaft and press gears off shaft. Use care to see that needle bearings and 3rd speed gear sleeve lock balls are not lost during the pressing operation.

Countershaft, Disassemble

1. Use puller to remove front bearing.
2. Remove countershaft drive gear snap ring.
3. Press off countershaft gears one at a time by placing gears on bed of press and pushing countershaft out of gears.

Mainshaft, Assemble

1. Coat inside bore of low speed gear with heavy grease.
2. Place two rows of needle bearings (72 per row) on inside of low speed gear with spacer between rows.
3. Assemble needle bearings in 2nd and 3rd speed gears in same manner.
4. Place mainshaft in vise with rear end down.
5. Place 2nd speed gear on mainshaft with clutch teeth to rear of shaft.
6. Place 3rd speed gear sleeve on shaft with flanged end toward rear. Line up the two notches on inside of sleeve with mainshaft spline and place two sleeve lock balls in notches of sleeve. Then press sleeve on mainshaft.
7. Place 3rd speed gear on mainshaft sleeve with clutch teeth to front.
8. Press 3rd and 4th speed clutch gear on mainshaft with its hub to front. Then install snap ring in front of clutch gear.
9. Place 3rd and 4th speed clutch collar on clutch gear with longer hub to rear.
10. Remove mainshaft from vise and place low and 2nd speed clutch gear on mainshaft with shift fork collar to rear.
11. Place low speed gear on rear of mainshaft with clutch teeth to front.
12. Grease one side of mainshaft low speed gear thrust washer and place on mainshaft with greased side against low gear.

Transmission, Assemble

Reassembly of the transmission is largely a matter of reversing the disassembly procedure. However, the following should be noted:

1. Shift fork collar of reverse idler gear should be to rear of case.
2. When installing reverse idler gear shaft, make sure flat on rear of shaft is lined up so countershaft rear bearing retainer will lock reverse idler shaft in place.
3. Mainshaft pilot bearing must be assembled on shaft with snap ring in outer race to rear.
4. Main drive gear bearing cap is marked "Top" and it should be so installed.
5. Make sure countershaft overdrive gear clutch collar is installed with hub of collar toward gear. Make sure collar is a free slide fit on spline hub of gear.
6. When installing overdrive shift fork and shaft, place shift fork guide shaft in hole provided in rear of case. Tap it through case and line up shift fork and tap shaft on through hole in center support in main case.

SERIES 5531

3 Speed Auxiliary

Disassemble, Fig. 18

1. Remove transmission cover.
2. Remove both propeller shaft flanges.
3. Remove front support from main drive gear bearing cap.
4. Remove countershaft rear bearing cap, noting number of shims under cap.
5. Remove mainshaft rear bearing cap and snap ring from bearing.
6. Use puller to remove rear bearing.
7. Remove mainshaft assembly from case.
8. Remove drive gear bearing cap, pulling bearing and washer with cap.
9. Lift drive gear from case.
10. Force countershaft toward rear to remove bearing cap from case.
11. Lift countershaft from case.

Disassemble Sub-Assemblies

1. Slide spacer and shims off main drive gear. Then use press or bearing puller to remove bearing from gear.
2. Remove oil seal from bearing cap and tip cap to allow washer and bearing to fall out.
3. If bearing cup requires replacing, drive out old cup and press new part squarely in until cup bottoms in counterbore.
4. To disassemble mainshaft, first mark shift sleeves and clutch gears so they may be assembled in the same position when rebuilding transmission. Remove shift sleeves from clutch gears.
5. Support mainshaft at low speed gear and remove clutch gear by pressing mainshaft out of gears.
6. Remove spacer lock from between splines and remove gear and spacer from shaft.
7. Press clutch gear off mainshaft.
8. The countershaft low speed gear is integral with the shaft, whereas the other three gears are retained by a snap ring and each gear located by a key. Mark each countershaft gear so correct position will be known when assembling.
9. If necessary to remove countershaft bearings, use puller which will apply pressure on bearing race.
10. Remove snap ring from front end of countershaft.
11. Support gears one at a time and with arbor press, press countershaft out of gears.

Sub-Assembly Build-Up

1. Drive countershaft keys in place and press gears on countershaft, using marks previously made before gears were removed.
2. Install new snap ring in groove at forward end of countershaft drive gear.
3. Press bearing cone on each end of countershaft, being sure that cone seats firmly against shoulder on countershaft.
4. Press direct and overdrive clutch gear on mainshaft, referring to marks made at disassembly.
5. Install overdrive gear on mainshaft with spur teeth toward clutch gear.
6. Slide spacer washer over splines and into place at overdrive gear hub. Turn washer in groove to align internal teeth with mainshaft splines so washer cannot be moved endwise. Insert lock in place between splines to hold washer in place.
7. Install low speed gear on mainshaft with spur teeth toward rear end of mainshaft.
8. Install low speed clutch gear with flat side of gear toward low speed gear.
9. Install shift sleeves on clutch gears.
10. Install drive gear bearing cup in case. Use new gasket and bolt bearing cap in place.
11. Press bearing on drive gear and slide sleeve into place against bearing.
12. Place original quantity of shims at outer end of sleeve. Then from inside of case, move drive gear and bearing in place in bearing cap.
13. Install drive gear front bearing and washer over outer end of drive gear. Then install flange and nut. While tightening flange nut, check bearing adjustment by turning drive gear by hand. If any binding or tightness is noted, it indicates an insufficient number of shims. Install sufficient number of shims to permit drive gear to be turned easily by hand but not so loose as to be able to spin.
14. If no tightness is evident with original shim pack in place, tighten flange nut to a minimum torque of

1 Direct and Overdrive Shift Fork
2 Set Screw
3 Shift Collar
4 Direct and Overdrive Clutch Gear
5 Mainshaft Overdrive Gear
6 Mainshaft Gear Spacer Washer
7 Breather
8 Low Speed Shift Fork
9 Low Speed Shift Collar
10 Low Speed Clutch Gear
11 Mainshaft Rear Bearing
12 Rear Bearing Cap
13 Oil Seal
14 Rear Flange
15 Rear Flange Nut
16 Mainshaft
17 Speedometer Drive Gear
18 Speedometer Driven Gear
19 Bearing Snap Ring
20 Spacer Lock
21 Countershaft Rear Bearing Cap
22 Mainshaft Low Speed Gear
23 Countershaft Rear Bearing
24 Shims
25 Bearing Cup
26 Countershaft Low Speed Gear
27 Countershaft Overdrive Gear
28 Power Take-off Gear
29 Drain Plug
30 Countershaft Gear Keys
31 Countershaft Drive Gear
32 Transmission Case
33 Snap Ring
34 Gasket
35 Front Bearing Cup
36 Countershaft
37 Countershaft Front Bearing
38 Inner Bearing Cup
39 Drive Gear Bearing Spacer
40 Bearing Spacer Shims
41 Oil Seal Washer
42 Front Flange Nut
43 Front Flange
44 Drive Gear Oil Seal
45 Drive Gear Front Bearing
46 Outer Bearing Cup
47 Drive Gear
48 Drive Gear Inner Bearing
49 Drive Gear Bearing Cap
50 Mainshaft Front Bearing
51 Cover Gasket
52 Direct and Overdrive Shift Rod
53 Packing Gland
54 Packing
55 Control Cover
56 Poppet Spring
57 Plunger
58 Poppet Ball
59 Interlock
60 Poppet Spring Retainer
61 Low Speed Shift Rod

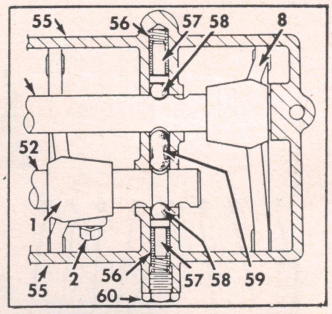

PLAN VIEW OF CONTROL COVER

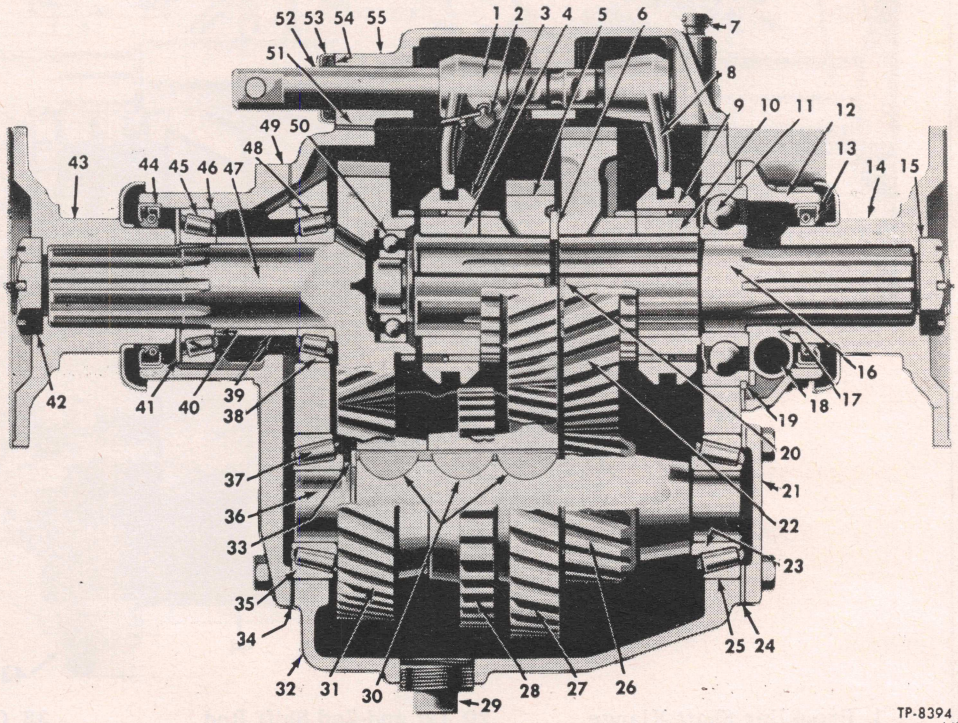

Fig. 18 Spicer Series 5531 three speed auxiliary

240 lb. ft. Recheck bearing adjustment by rotating drive gear. Shims are available in three sizes (.003″, .010″ and .030″) to establish proper bearing adjustment.

15. When proper shim pack has been selected, remove drive gear from bearing cap and lay shim pack aside for use when reassembling transmission.

Transmission, Assemble

1. If drive gear bearing cap is removed, bolt cap in place, using new gasket with oil passages aligned with passages in cap and case.
2. Install mainshaft inner bearing cup and countershaft front bearing cup.
3. Install countershaft assembly in case.
4. Install countershaft rear bearing cup, using same thickness of shims removed during disassembly. Install cap and tighten bolts, meanwhile turning countershaft by hand. If any binding is noted, remove bearing cap and add sufficient shims to provide a free turning countershaft with no end play. Three sizes of shims (.003″, .010″ and .030″) are available for use in obtaining proper adjustment of countershaft bearings.
5. Install drive gear and bearing in bearing cap, using shim pack previously selected.
6. Before installing propeller shaft flange, be sure washer is in place and install new oil seal with seal lip pointing inward.
7. Install front support bracket on trunnion at bearing cap. Tighten flange nut 240 lb. ft. minimum and install cotter pin.
8. Install mainshaft front bearing on pilot at front of mainshaft.
9. Lower mainshaft in case. Install rear bearing with shielded side toward front.
10. Install speedometer drive gear.
11. Install new oil seal in mainshaft rear bearing cap with lip of seal pointing inward. Also assemble speedometer driven gear in cap if this part has been removed.
12. Be sure snap ring is in groove in bearing, then install bearing cap, using new gasket.
13. Install flange and nut, tightening nut to 240 lb. ft. minimum.
14. Move shift forks to neutral and install cover with new gasket, being sure shift forks enter grooves in shift or collars.
15. Install breather in cover.

6041 SERIES

4 Speed Auxiliary

Disassemble, Fig. 19

1. Remove transmission cover.
2. Remove both propeller shaft flanges.
3. Remove support from main drive gear bearing cap.
4. Remove countershaft rear bearing cap, noting number of shims under cap.

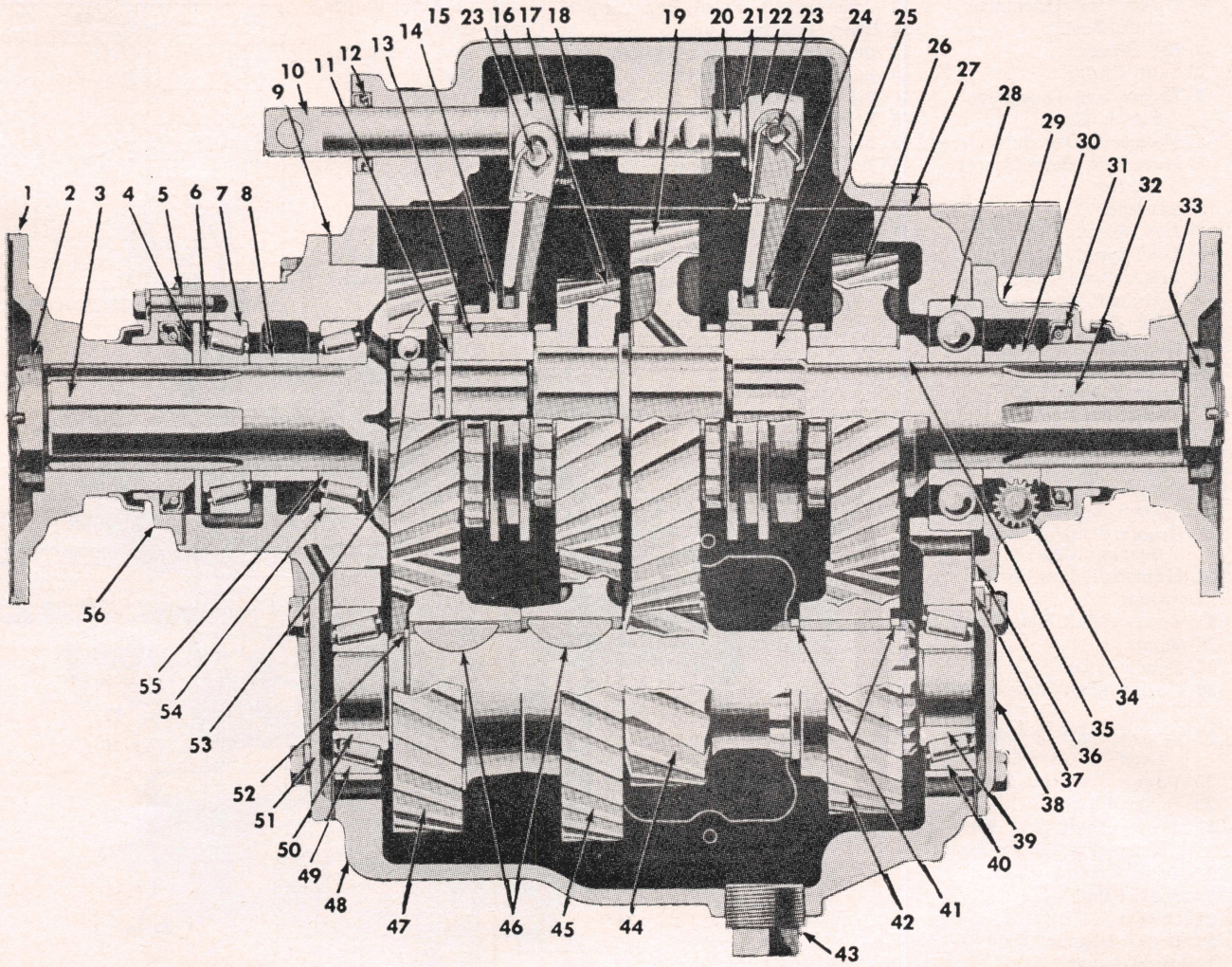

1 Propeller Shaft Flange
2 Main Drive Gear Nut
3 Main Drive Gear
4 Companion Flange Washer
5 Seal Gasket
6 Outer Bearing Cone
7 Outer Bearing Cup
8 Drive Gear Bearing Spacer
9 Bearing Cap Gasket
10 Direct and Overdrive Shift Rod
11 Mainshaft Overdrive Gear Snap Ring
12 Shift Rod Oil Seal
13 Overdrive and Direct Clutch Gear
14 Overdrive and Direct Clutch Collar
15 Shifter Housing (Cover)
16 Direct and Overdrive Shift Fork
17 Mainshaft Overdrive Gear
18 Shift Rod Spacer
19 Mainshaft 1st Speed Gear
20 1st and 2nd Shift Rod
21 Shift Rod Spacer
22 1st and 2nd Shift Fork
23 Shift Fork Screw
24 1st and 2nd Speed Clutch Gear Collar
25 1st and 2nd Speed Clutch Gear
26 Mainshaft 2nd Speed Gear
27 Shifter Housing Gasket
28 Mainshaft Rear Bearing Assembly
29 Mainshaft Rear Retainer Cap Assembly
30 Speedometer Drive Gear
31 Oil Seal
32 Mainshaft
33 Mainshaft Nut
34 Speedometer Driven Gear
35 Mainshaft 2nd Speed Gear Sleeve
36 Retainer Cap Gasket
37 Rear Bearing Cap Adjusting Shims (0.003, 0.010 and 0.030)
38 Countershaft Rear Bearing Cap
39 Countershaft Rear Bearing Cone
40 Countershaft Rear Bearing Cup
41 Countershaft 2nd Speed Gear Snap Rings
42 Countershaft 2nd Speed Gear
43 Drain Plug
44 Countershaft 1st Speed Gear
45 Countershaft Overdrive Gear
46 Countershaft Keys
47 Countershaft Drive Gear
48 Transmission Case
49 Countershaft Front Bearing Cup
50 Countershaft Front Bearing Cone
51 Main Drive Gear Bearing Cap
52 Countershaft Drive Gear Snap Ring
53 Mainshaft Front Bearing
54 Bearing Cup
55 Bearing Cone
56 Seal Cap

Fig. 19 Spicer Series 6041 four speed auxiliary

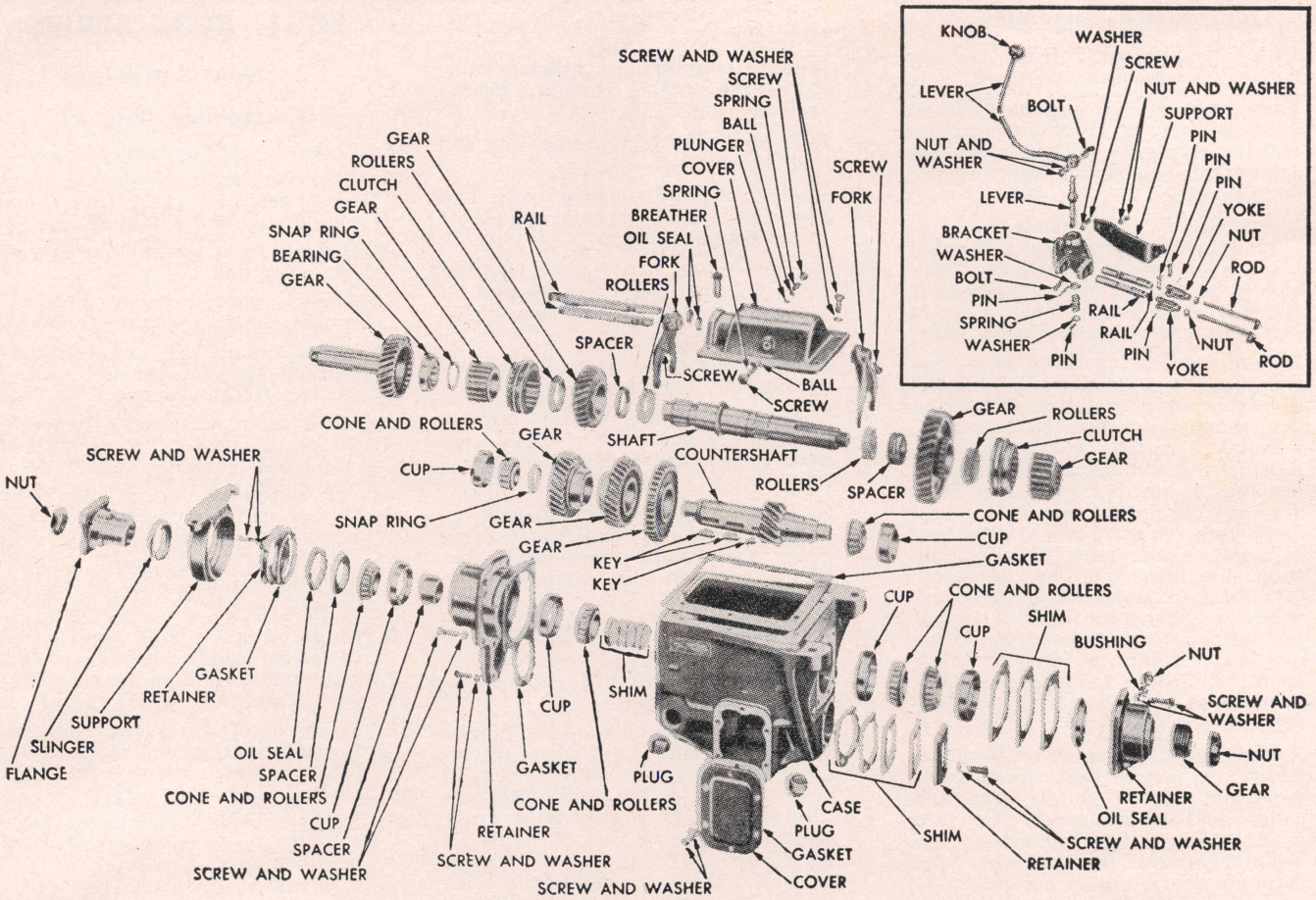

Fig. 20 Spicer Series 6031, 6231 three speed auxiliary transmission

5. Remove mainshaft rear bearing cap, oil seal, and speedometer driven gear in cap. Then remove oil seal and driven gear from cap and sleeve.
6. Remove main drive gear bearing cap with bearings, gear, seal and seal cap.
7. Remove speedometer drive gear.
8. With suitable puller, press mainshaft with front pilot bearing, overdrive gear snap ring, overdrive and direct clutch gear, collar and overdrive gear out through front of case, leaving first speed gear, first and second clutch gear and collar, and second speed gear and sleeve in case. Remove these items from case after removing mainshaft.
9. Remove mainshaft rear bearing.
10. Drive countershaft toward rear far enough to force rear bearing cup out of case. Using snap ring pliers, remove countershaft second speed gear snap ring from groove, slide second gear forward, then lift countershaft assembly out of case.
11. Remove countershaft front bearing cup from case.
12. Remove power take-off covers, and drain and filler plugs from case.
13. Disassemble sub-assemblies as required. If countershaft is to be disassembled, gears should be marked so that correct position will be known when installing.

Countershaft Assemble

1. Drive gear keys in countershaft slots. Then using arbor press and suitable driver, press countershaft overdrive gear and drive gear into place.
2. Install new snap ring in groove at forward end of drive gear.
3. Press cone on front end of countershaft, making sure that cone seats firmly against countershaft.
4. Install second speed gear front snap ring over end of countershaft and position snap ring in groove in countershaft.
5. Install second gear on countershaft, then position rear snap ring in groove.
6. Press bearing cone on rear end of countershaft, making sure cone seats firmly against countershaft.

Mainshaft Assemble

1. Place mainshaft in vise with front end up. Then apply heavy gear oil on bearing surfaces.
2. Install overdrive gear and overdrive and direct clutch gear with shoulder toward overdrive gear.
3. Install snap ring in groove at front end of mainshaft.
4. Install overdrive and direct clutch gear collar with external teeth toward front end of mainshaft.
5. Install mainshaft pilot bearing, using suitable bearing replacer.

Main Drive Gear Assemble

1. Apply transmission lubricant to bearings before installing.
2. Press bearing cups into cap and install inner bearing on drive gear. Then install bearing spacer on drive gear.
3. Place drive gear and bearing in arbor press with bearing spacer in place.
4. Apply pressure on front bearing inner race, using a piece of 2" diameter tubing about 4" long over end of shaft. Bearing cup should turn readily but not spin on shaft with pressure applied. If bearing adjustment is too loose or too tight, select correct spacer (available in several sizes). After correct spacer has been installed, remove assembly from press.
5. If seal has been removed from seal cap, press new seal in cap.
6. Place washer in position against bearing cone. Then install seal cap with new gasket. Install cap bolts and tighten securely.

Transmission, Assemble

1. Install countershaft front bearing cup in transmission case bore.
2. Lower countershaft assembly in case with rear end of shaft out through rear bearing bore. Then move assembly forward so that front bearing enters cup.
3. Install drive gear bearing cap temporarily with new gasket. Tighten cap screws evenly and firmly. Then slide countershaft second speed gear on shaft and install snap ring in groove ahead of second speed gear.
4. Install rear bearing cup. Using same thickness of shims as was removed at disassembly, install rear bearing cap temporarily. Tighten cap bolts, meanwhile turning countershaft by hand. If any binding of countershaft bearings is noted before cap bolts are fully tightened, remove cap and add shims. If cap bolts are tightened with a shim pack which is too thin, bearings will be damaged. Three sizes of shims (.003", .010" and .030") are available for use in adjusting countershaft bearings. Bearing adjustment is correct when countershaft can be turned without evidence of binding and without perceptible end play.
5. Remove main drive gear bearing cap. Lower mainshaft first speed gear, first and second clutch gear and collar, and second speed gear into case. Then guide mainshaft assembly through front of case and through gears. Slide second speed gear sleeve into hub of second gear through rear of case.
6. Using new gasket, install main drive gear bearing cap with main drive gear and bearings on front of case, guiding mainshaft pilot bearing into pocket of main drive gear. Tighten cap bolts securely.
7. Press mainshaft rear bearing onto mainshaft and into case, then place speedometer drive gear on shaft, with shoulder toward front of transmission.
8. Install mainshaft rear bearing cap and gasket and tighten capscrews securely.
9. Install propeller shaft flange on mainshaft and tighten nut to a torque of 350-400 lbs. ft.
10. Place transmission front support bracket on trunnion at bearing cap, install front flange and tighten nut to a torque of 350-400 lbs. ft.
11. Install cover, being sure that shift forks enter grooves in shift collars.
12. Install breather in cover, and drain plugs.

6031, 6231 SERIES

3 Speed Auxiliaries

Disassemble, Fig. 20

1. Take off the transmission cover and hand brake mechanism.
2. Pull off both universal flanges and oil slingers.
3. Remove countershaft bearing caps, noting the number of shims behind rear bearing.
4. Remove mainshaft rear bearing cap and oil seal.
5. Use a puller to remove cage and bearing assembly, noting number of shims behind the cap.
6. Remove main drive gear bearing cage, together with bearing and oil seal, noting thickness of shims used at this point.
7. Use a puller to remove oil seal and bearing cup from cage.
8. Push countershaft to rear, moving mainshaft back at the same time until countershaft rear bearing is free of case.
9. Separate mainshaft from main drive gear, leaving pilot bearing in drive gear. Then shift countershaft forward again, and lift mainshaft out of the case.
10. Push main drive gear into case and lift out.
11. Use puller to remove drive gear spacer and bearing.
12. To disassemble mainshaft, make shift sleeves and clutch gears for reassembly purposes and slip clutch sleeves from clutch gears. Remove retainer and snap ring from front end of shaft and use a puller, if necessary, to remove the clutch gear. If a puller is used, hold a cloth under the assembly to catch the rollers. This same precaution should be taken when removing the low speed gear.
13. Lift out the countershaft. If the countershaft gears are to be removed, release the snap ring from the front end and press the gears off one at a time (except low gear which is integral with the shaft.)

Reassemble

Reverse the order of the above procedure to assemble the transmission. When assembling the mainshaft, however, clamp it in a vise with its rear end up. Apply a liberal quantity of grease around the low speed gear bearing surface and assemble the rollers around the shaft.

Assemble the low speed gear over the rollers with the splined hub of the gear facing up. Slip the bearing spacer into the bore of the gear, pushing it down against the rollers, then assemble the other rollers in the same manner.

Install the low speed clutch gear with the splined end up, and the collar with the conical end up, pressing the gear and collar tight against the low speed gear. Now fasten the rear end of the shaft in the vise and assemble the overdrive gear and bearings in the same manner, using the high speed clutch gear and snap ring to hold the gear in place. Install the clutch sleeves over the gears according to the marks made during disassembly.

8031, 8035 SERIES

3 Speed Auxiliaries

Disassemble, Fig. 21

1. Remove transmission cover.
2. Lock mainshaft by placing gears in two speeds at same time, remove nuts and pull off both flanges.
3. Remove front bearing cap and bearing as a unit.
4. Remove washer from front end of countershaft.
5. Remove mainshaft rear bearing cap and pull speedometer drive gear and washer off mainshaft.
6. Move main drive gear forward as far as possible and force mainshaft and gears rearward, thereby forcing mainshaft rear bearing out of case.
7. Use a suitable puller to remove bearing from mainshaft.
8. Slide low speed shift collar off mainshaft and remove through rear of case.
9. Raise front end of mainshaft and lift from case, passing low speed gear teeth through power take-off gear teeth.
10. Move main drive gear rearward, forcing bearing out of bore. Then lift assembly out through top of case.
11. Remove countershaft rear bearing cap. Then push countershaft forward until front bearing is free of case, after which use puller to remove bearing.
12. Move countershaft rearward until rear bearing is out of case. Then remove snap ring and bearing from countershaft. The assembly may then be lifted out of the case by its front end.

Mainshaft, Disassemble

1. Support mainshaft assembly with front side of low speed gear on bed plate of arbor press.
2. Apply pressure on rear of mainshaft to force low speed clutch gear off mainshaft. Use care to prevent loss of needle bearings as mainshaft is pressed out of gear.
3. Grip mainshaft in vise with front end up. Then remove mainshaft pilot bearing from shaft, and remove clutch gear lock nut.
4. Set mainshaft in arbor press with flange on sleeve resting on bed plate. Press on front end of mainshaft to force sleeve with mainshaft overdrive gear and bearings and clutch gear off mainshaft.
5. Slide gear off sleeve, being careful not to lose bearings.

Mainshaft, Assemble

1. Place locating pin in hole in sleeve. Apply heavy grease on surface of sleeve to hold bearings in place. Then stand sleeve on end with flange down and arrange needle bearings and spacer around sleeve.

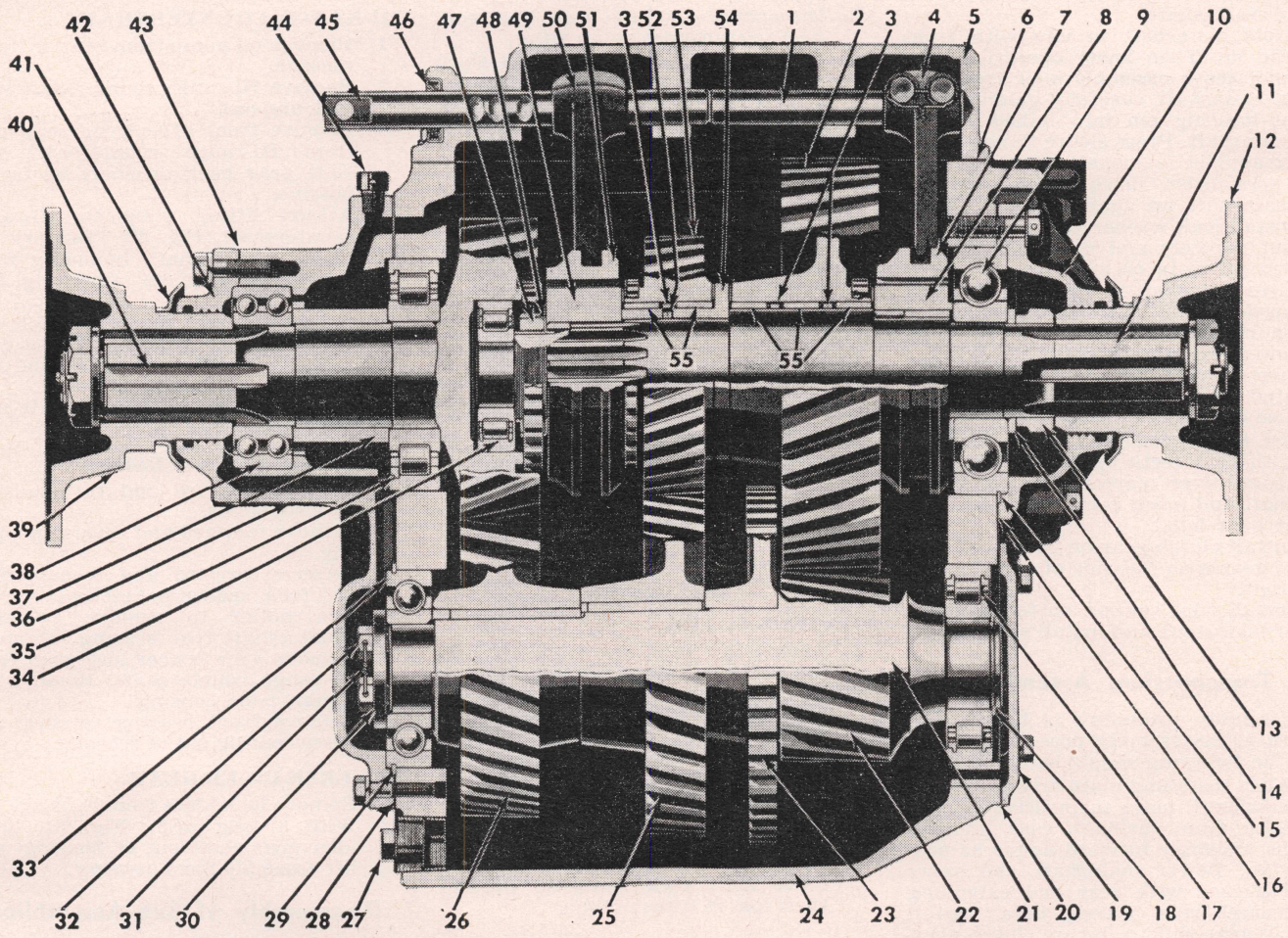

1 Low (1st) Shift Rod
2 Low (1st) Speed Gear
3 Bearing Spacer
4 Low (1st) Speed Shift Fork
5 Cover
6 Cover Gasket
7 Low (1st) Speed Shift Collar
8 Low (1st) Speed Clutch Gear
9 Mainshaft Rear Bearing
10 Mainshaft Rear Bearing Cap
11 Mainshaft
12 Flange
13 Speedometer Drive Gear
14 Spacer Washer
15 Snap Ring
16 Gasket
17 Countershaft Rear Bearing
18 Bearing Snap Ring
19 Countershaft Rear Bearing Cap
20 Cap Gasket
21 Countershaft
22 Low (1st) Speed Gear Teeth (8031-C)
Low (1st) Speed Gear (8031-G, 8035-G)
23 Power Take-Off Drive Gear
24 Case
25 Countershaft Overdrive Gear
26 Countershaft Drive Gear
27 Drain Plug
28 Bearing Cap Gasket
29 Bearing Snap Ring
30 Bearing Retainer Washer
31 Lock Wire
32 Washer Cap Screw
33 Countershaft Front Bearing
34 Drive Gear Pocket Bearing
35 Drive Gear Rear Bearing
36 Drive Gear Bearing Cap
37 Bearing Spacer
38 Drive Gear Front Bearing
39 Propeller Shaft Flange
40 Main Drive Gear
41 Guard
42 Front Bearing Cap
43 Gasket
44 Vent
45 Direct and Overdrive Shift Rod
46 Shift Rod Oil Seal
47 Clutch Gear Lock Nut
48 Lock Washer
49 Clutch Gear
50 Direct and Overdrive Shift Fork
51 Shift Collar
52 Locating Pin
53 Mainshaft Overdrive Gear
54 Sleeve
55 Needle Bearings

TPM-1072

Fig. 21 Spicer Series 8031, 8035 three speed auxiliary transmissions

Use 63 bearings in each row. Carefully lower overdrive gear over sleeve with spur teeth toward front of mainshaft.
2. Hold mainshaft in vise with front end up. Then lower overdrive gear and sleeve assembly over front end of mainshaft, carefully guiding head of locating pin into milled slot of mainshaft. Press sleeve flange tightly against mainshaft shoulder.
3. Press direct drive clutch gear on mainshaft up against sleeve. Then install lock washer and nut. Tighten nut securely and bend lock washer against flats on nut.
4. Grip mainshaft in vise with rear end up. Apply heavy transmission grease on mainshaft surface contacted by low speed gear rollers. Then arrange two rows of needle bearings separated by a spacer around mainshaft. Use 63 rollers in each row.
5. Set low speed gear over bearings with spur teeth upward. Drop other spacer over rearward end of mainshaft and insert remaining 63 rollers at gear hub.
6. Install clutch gear on splines at rear of gear with flat side of gear toward front.
7. Install pilot bearing on forward end of mainshaft and install shift collar.

Transmission, Assemble

Reassembly procedure is largely the reverse of disassembly procedure. However, the following should be noted:

1. When installing main drive gear and mainshaft, place main drive gear in place from inside of case, moving the assembly forward as far as possible. Lower mainshaft and gears into case with rear end extending through rear bearing bore. Install low gear shift collar on clutch gear, inserting collar through bearing bore in case.
2. Move mainshaft forward so that mainshaft pilot bearing enters pocket of main drive gear. Then install rear mainshaft bearing, spacer washer and speedometer drive gear.
3. Be sure to install front bearing cap gasket so oil passage is not obstructed.
4. Companion flange nuts should be torque tightened to 240-310 lbs. ft.

8125 MODEL

This transmission, Figs. 22 and 23, is made semi-automatic to obtain twelve speeds forward and six reverse with only three shift lever positions. To accomplish the pre-selected but automatic shifts, air actuated power cylinders built into each end of the shifter housing are used to make the input gear splits and hi-lo range shifts. Air pressure that makes these shifts is admitted and exhausted from opposite ends of the double acting cylinders through a control valve operated by cables attached to the gear shift lever.

Transmission, Replace

1. Completely bleed pressure from all air tanks and drain lubricant from transmission.
2. Remove all cables, clamps, etc., that are necessary before transmission is removed.
3. Disconnect air line hose that connect to transmission air filter.
4. On tilt cab models, disconnect shift, selector, and forward and reverse remote cables or rods from transmission. On conventional models, remove shift lever tower assembly.
5. Disconnect speedometer cable.
6. Disconnect propeller shaft, clutch and brake controls.
7. Remove two plunger covers from rear of air control valve, Fig. 24. With splitter and range control cables shifted rearward, remove lock nuts and rubber ring from end of cables.
8. Loosen cable lock nuts at front of air control valve and pull cables free. Move cables clear of transmission.
9. Support transmission with jack or hoist, unfasten transmission from its mountings and pull it rearward and out of chassis.
10. Reverse foregoing procedure to install.

Disassembly

CONTROL COVER

1. Remove air inlet line from air control valve and air regulator.
2. Remove two cap screws and set bracket, filter and regulator aside.
3. Remove cover screws and hook a lifting sling to cover so it pivots and raises at an angle, Fig. 25. *Transmission must be in Lo-range gear position for range fork to clear forward and reverse interlock.*
4. Lift cover straight upward and remove shift fork shoes to prevent their loss in transmission.

MAINSHAFT

1. Remove clutch housing.
2. Lock transmission in two gears, Fig. 26. Also, place transmission forward and reverse shift rod in forward gear position (rod pushed inward).
3. Loosen Hi-range countershaft lock nut.
4. Remove main drive gear bearing lock nut, Fig. 27. *Do not remove main drive gear retaining nuts at this time.*
5. Remove U-joint flange from rear end of transmission.
6. Remove mainshaft rear bearing cap, Lo-range countershaft rear bearing cap and oil pump cover. Install two spacers and lock nuts to Lo-range countershaft rear bearing cap studs, then remove rear bearing lock nut. Remove lock nuts, spacers and rear bearing retainer.
7. Use a suitable puller to remove mainshaft rear bearing retainer. Take off bearing and retainer, oil ring and spacer.
8. Support mainshaft as shown in Fig. 28.
9. Remove main drive gear bearing retainer with a puller.
10. Remove snap ring and press out drive gear bearing.
11. Remove thrust washer and lift main drive gear stem toward upper left corner of housing and pull front drive gear through housing opening.
12. Remove mainshaft assembly from housing, Fig. 28.

HI-RANGE COUNTERSHAFT

1. Remove oil pump from rear of transmission.
2. Remove Hi-range countershaft shift fork and rod.
3. Remove front drive gear snap ring from Hi-range countershaft and slide gear back on shaft as far as possible.
4. Attach lifting sling to Hi-range countershaft, Fig. 29. Then pry Hi-range countershaft, including front bearing retainer out of housing, Fig. 29.
5. After Hi-range countershaft is out far enough to attach puller, remove lock nut and thrust washer and pull retainer and bearing off shaft.
6. Remove Hi-range countershaft rear bearing retainer.

LO-RANGE COUNTERSHAFT

1. Remove forward and reverse shift fork set screw.
2. Remove forward and reverse poppet, Fig. 30.
3. Remove forward and reverse shift rod, fork, spacer and oil seal.
4. Use puller to remove Lo-range countershaft rear bearing retainer.
5. Remove gear spacer and gear from Lo-range countershaft. Remove assembly from housing.
6. Remove front bearing retainer and press bearing out of retainer.

REVERSE IDLER GEAR

1. Remove lock plate from housing.
2. With a long drift, Fig. 31, drive idler gear shaft out of housing, and lift assembly from housing.

Disassembly of Sub-Assemblies

CONTROL COVER—Disassemble control cover, splitter cylinder and range cylinder as suggested by Figs. 32, 33 and 34.

MAINSHAFT ASSEMBLY

1. If splitter synchronizer was not removed when mainshaft was removed from housing, slide synchronizer off mainshaft.
2. Place synchronizer on bench and pull up on bronze ring to remove blocker shafts from clutch gear. Watch for poppets and springs. Accomplish same procedure for other side of synchronizer.
3. Remove Lo-range and reverse gear and range synchronizer from mainshaft.
4. Place range synchronizer on bench with small bronze ring up. Lift upward to remove ring from clutch gear. Watch for poppets and springs.
5. Compress three synchronizer poppets back into clutch gear, using a small screwdriver or similar tool, Fig. 35. Pull clutch gear from large bronze ring, using care not to lose poppets and springs.
6. Place mainshaft in vise with soft jaws and unstake clutch drive gear lock nut.
7. Remove mainshaft lock nut and tap shift collar to loosen bearing cone.
8. Remove bearing cone, clutch drive

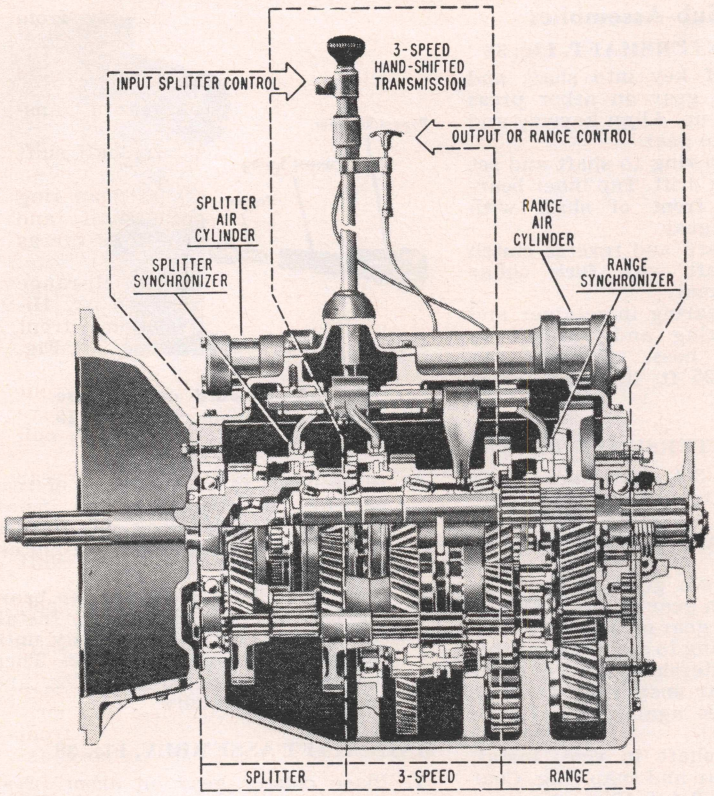

Fig. 23 Spicer 8125 transmission

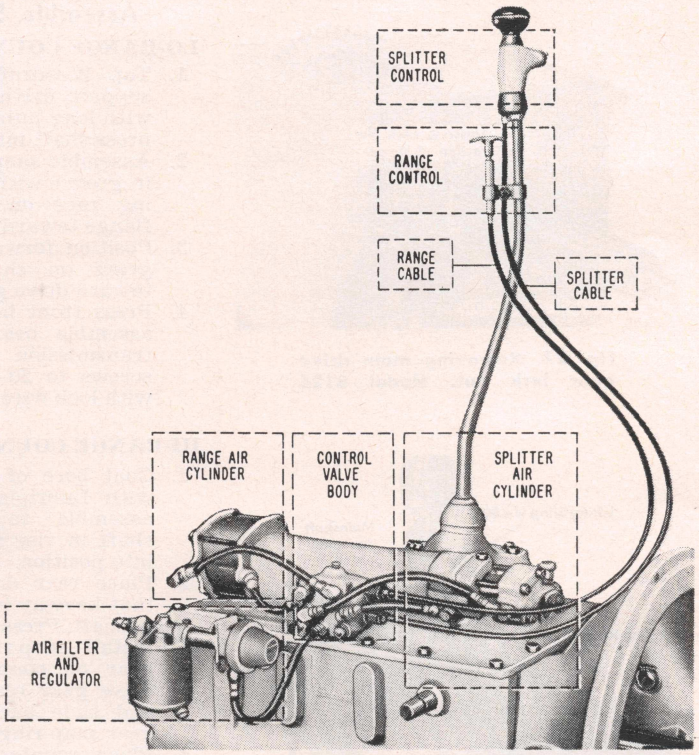

Fig. 22 Spicer 8125 transmission shift control

gear, spacer, shim pack and spacer. Wire shim pack together and put aside for reassembly.

9. Remove 5-6, 11-12 synchronizer from cluster gear.
10. Remove second clutch drive gear bearing cone and cluster gear by tapping on cluster with soft hammer. It may be necessary to remove these parts by means of an arbor press.
11. Remove cluster gear snap ring and press bearing cups, spacer and cone free of cluster gear.

HI-RANGE COUNTERSHAFT

1. Place Hi-range countershaft in a vise.
2. Remove rear lock nut, rear bearing outer race and roller assembly.
3. Shift Hi-range synchronizer into 1-2, 7-8 gear position. Using a brass drift, tap shifting collar and steel synchronizer cone to remove rear bearing inner race.
4. Remove rear thrust washer; then slide 1-2, 7-8 speed gear from countershaft.
5. Remove synchronizer.
6. Remove both inner and outer front drive gear snap rings and slide gear from countershaft.
7. Press countershaft out of rear drive gear. *Do not attempt to press gear off by supporting on 3-4, 9-10 speed gear as the Woodruff key will not clear this gear.*
8. Remove Woodruff key and slide 3-4, 9-10 gear from countershaft.

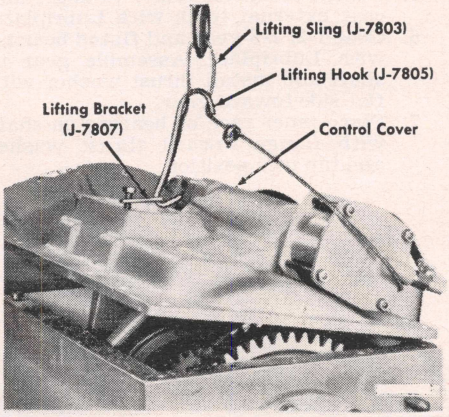

Fig. 25 Removing control cover. Model 8125

LO-RANGE COUNTERSHAFT

1. Place assembly in a vise and pull off front bearing inner race.
2. Remove snap ring and press shaft out of drive gear.

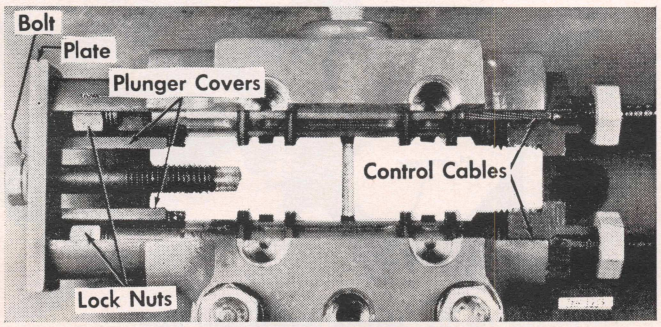

Fig. 24 Air control valve components. Model 8125

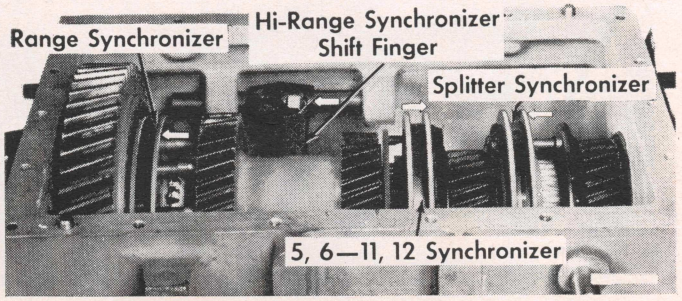

Fig. 26 Position of synchronizers and shift rods to lock transmission. Model 8125

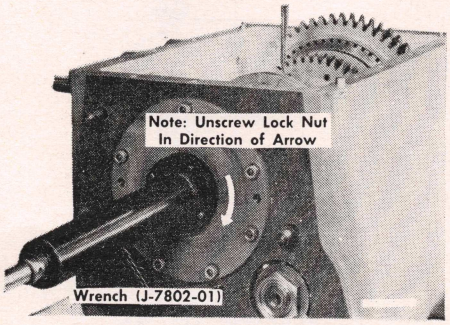

Fig. 27 Removing main drive gear lock nut. Model 8125

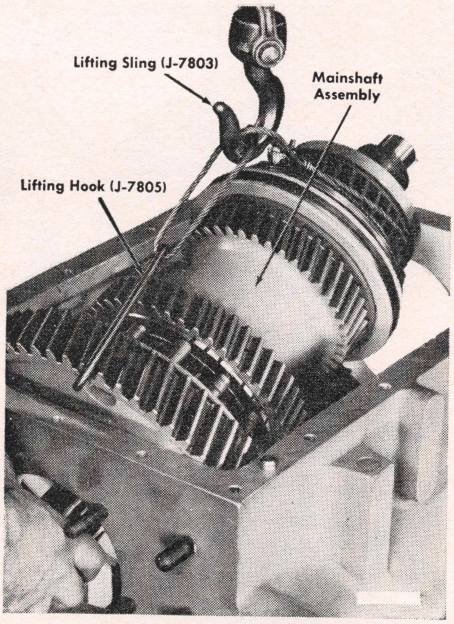

Fig. 28 Lifting mainshaft assembly from housing. Model 8125

Assemble Sub-Assemblies

LO-RANGE COUNTERSHAFT, Fig. 36

1. Tap Woodruff key into shaft and support drive gear on arbor press with long hub up. Align keyway and press shaft into gear.
2. Assemble snap ring to shaft and set in groove with drift. Tap inner bearing race on front of shaft with flange toward gear.
3. Position forward and reverse clutch gears on shaft with fork collar toward drive gear.
4. Press front bearing in retainer and assemble bearing and retainer to transmission boss. Torque cap screws to 20-25 ft. lbs. and secure with lock wire.

HI-RANGE COUNTERSHAFT, Fig. 37

1. Coat bore of 3-4, 9-10 speed gear with Lubriplate or equivalent and assemble to countershaft. Place shaft in vise and tap Woodruff key into position.
2. Place rear drive gear on shaft so that keyway in gear aligns with key in shaft. Press gear on shaft.
3. Install snap ring to secure rear drive gear on countershaft. Place front drive gear rear snap ring on shaft and slide back against rear drive gear snap ring.
4. Place countershaft in vise. Install front drive gear and snap ring. Coat clutch teeth of 3-4, 9-10 gear splines of countershaft and clutch teeth of synchronizer with Lubriplate.
5. Assemble synchronizer to shaft and coat external teeth with Lubriplate.
6. Coat 1-2, 7-8 gear and fluted bearing with Lubriplate. Assemble gear to shaft and install thrust washer with flat side toward gear.
7. Place inner race of bearing on shaft with flange toward thrust washer and tap into position.

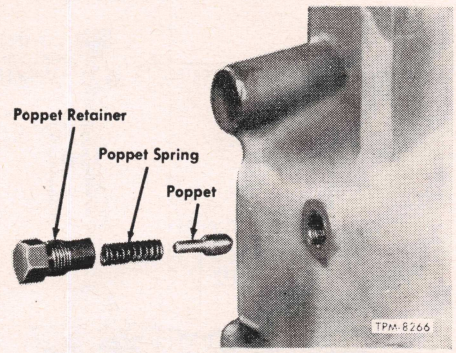

Fig. 30 Forward and reverse shift rod poppet. Model 8125

8. Place outer race and rollers of rear bearing on inner race and install lock nut. Tighten lock nut to 350-400 ft. lbs. and stake nut to countershaft.
9. Place rear bearing retainer in bearing bore at rear of housing. Install cap screws and tighten evenly until retainer is in proper position. Then torque screws to 30-35 ft. lbs. and secure with lock wire.

MAINSHAFT ASSEMBLY, Fig. 38

1. Place cluster gear on arbor press and install tapered roller bearing cone in cluster gear face up.
2. Start cluster gear bearing cup in gear with tapered face down. Place bearing spacer on cup. Place second bearing cup on spacer with tapered face up.
3. Using suitable tool in arbor press, press bearing cups and spacer into cluster gear.
4. Install snap ring with tapered side

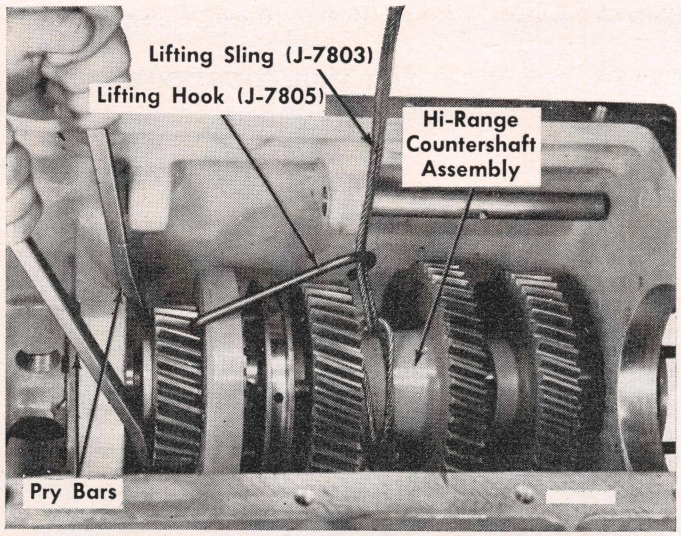

Fig. 29 Prying Hi-range countershaft from housing. Model 8125

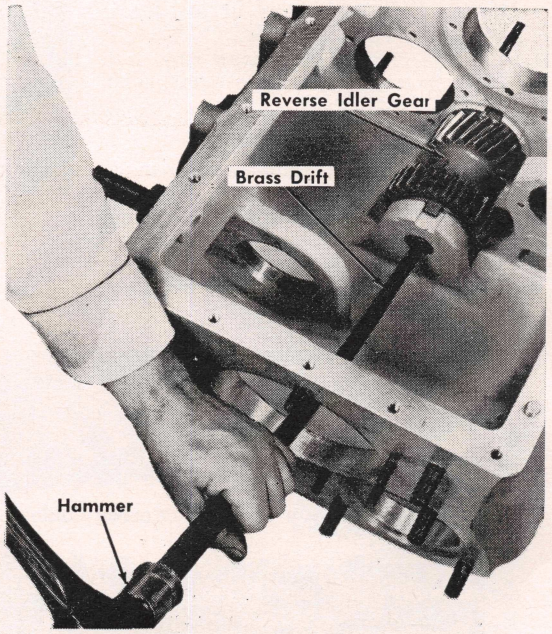

Fig. 31 Driving reverse idler gear shaft out of housing. Model 8125

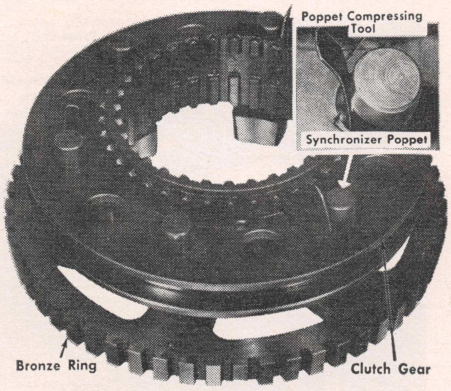

Fig. 35 Compressing poppets into clutch gear. Model 8125

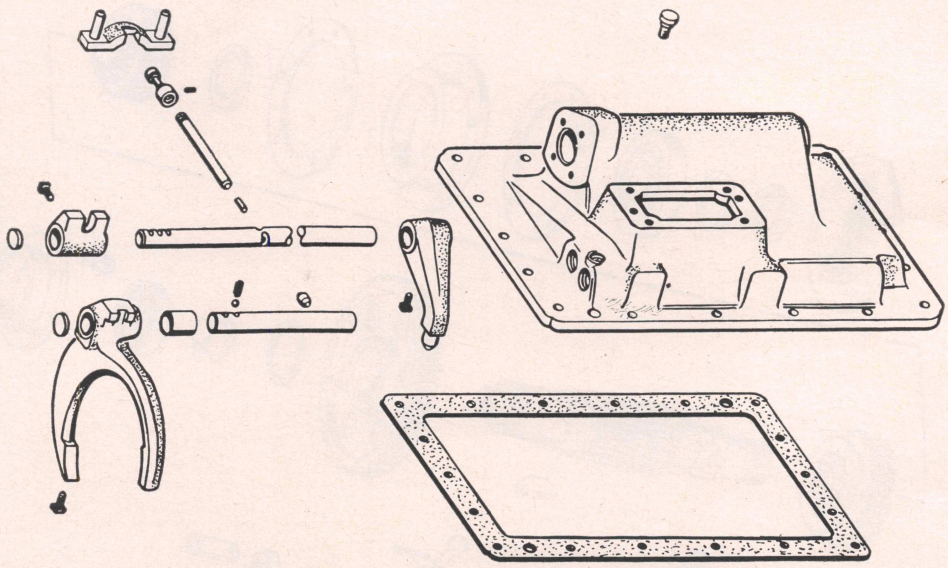

Fig. 32 Exploded view of control cover. Model 8125

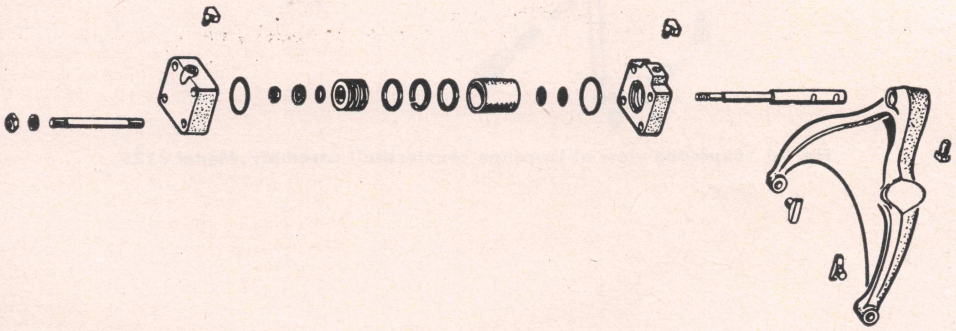

Fig. 33 Exploded view of splitter cylinder. Model 8125

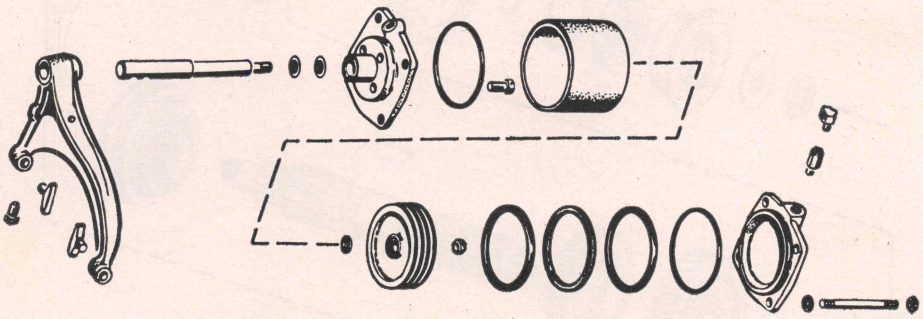

Fig. 34 Exploded view of range cylinder. Model 8125

up in groove flush with end of bearing cup.

5. Assemble bearing spacer, shim pack, and spacer in cluster gear. Place rear bearing cone in cluster gear, centering on bearing spacer.
6. Using arbor press, apply light load on bearing cone. Check for free rotation of gear, Fig. 39. If gear will not rotate or does not rotate easily, add shim to pack. If gear spins freely, check for end play and add or remove shims as required to obtain zero end play.
7. Place mainshaft clutch gear bearing cone on cluster gear and bearing spacer with tapered face up. Set bearing spacers and shim pack on bearing, Fig. 40.
8. Place clutch gear over bearing and spacers. Place front bearing cone in gear and check for free rotation and end play as explained above.
9. Place mainshaft on arbor press with pilot bearing end up. Remove rear bearing cone from cluster gear and press on mainshaft with tapered face up.
10. Remove spacers and shims from cluster gear and assemble on mainshaft. Place cluster gear on mainshaft with large diameter down.
11. Place cluster and clutch gear bearing spacer in cluster gear. Press on bearing spacer to force bearing cone onto mainshaft.
12. With pressure applied to gear, recheck for preload and end play.
13. Place 5-6, 11-12 synchronizer on cluster gear. Remove bearing cone from clutch gear and press on mainshaft. Remove spacers and shims from clutch gear and install on mainshaft.
14. Set clutch gear on bearing cone and press front bearing cone on mainshaft.
15. With pressure still applied to bearing cone, recheck for preload and end play.
16. Install lock nut on mainshaft and torque to 400-450 ft. lbs.
17. Check clutch gear bearing preload as shown in Fig. 41. Preload should not exceed two pounds load. *While making test, hold 5-6, 11-12 synchronizer back to eliminate drag. If preload is not within limits, adjust shim pack as necessary.*
18. Check cluster gear preload in same manner except preload should not exceed three pounds load.
19. Stake lock nut in groove of mainshaft.
20. Assemble range synchronizer by placing Lo-range bronze cone on bench and setting synchronizer clutch gear on blocker shafts with external teeth up. Assemble three poppets and springs to three offset holes in clutch gear.
21. Rotate and set clutch gear down over blocker shaft, making sure pins are inserted in chamfered openings on bottom side of clutch gear.
22. Assemble three remaining poppets and springs.
23. Position Hi-range bronze blocker

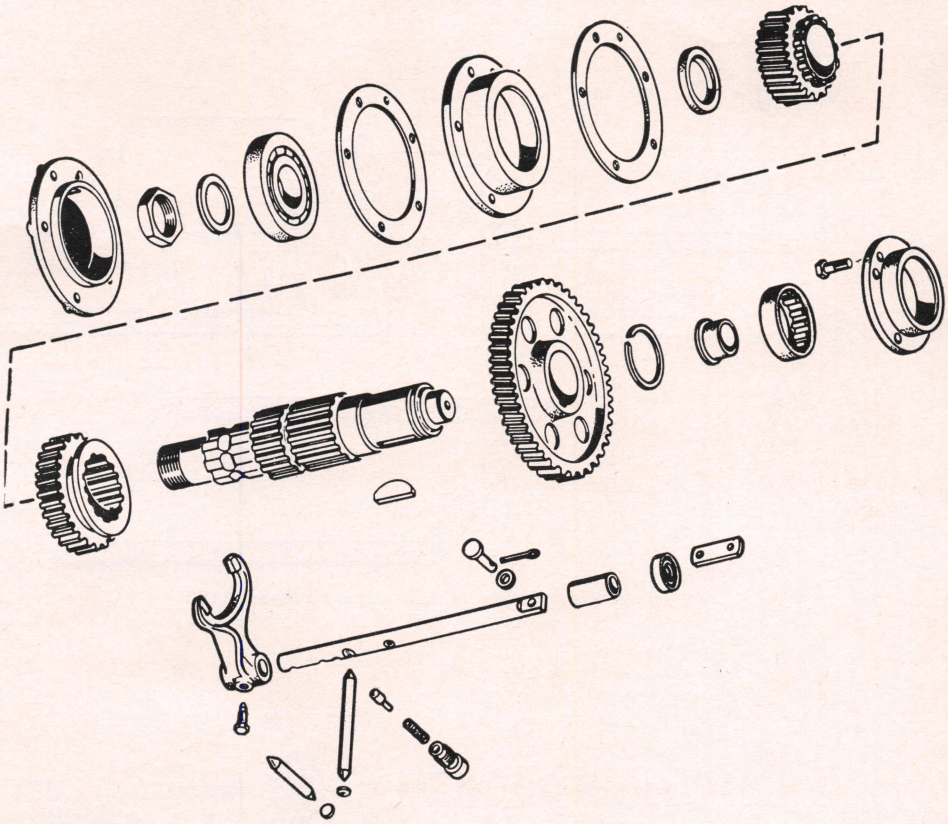

Fig. 36 Exploded view of Lo-range countershaft assembly. Model 8125

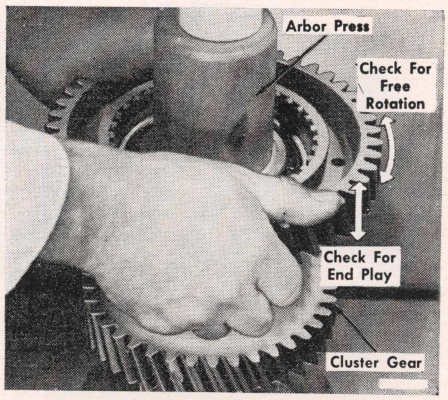

Fig. 39 Checking free rotation and end play of mainshaft cluster gear. Model 8125

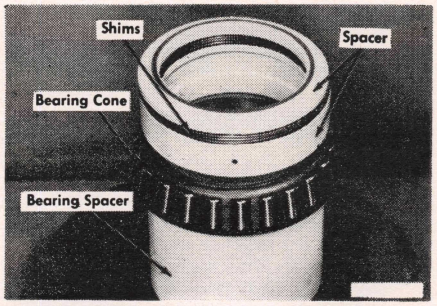

Fig. 40 Assembling mainshaft drive gear components. Model 8125

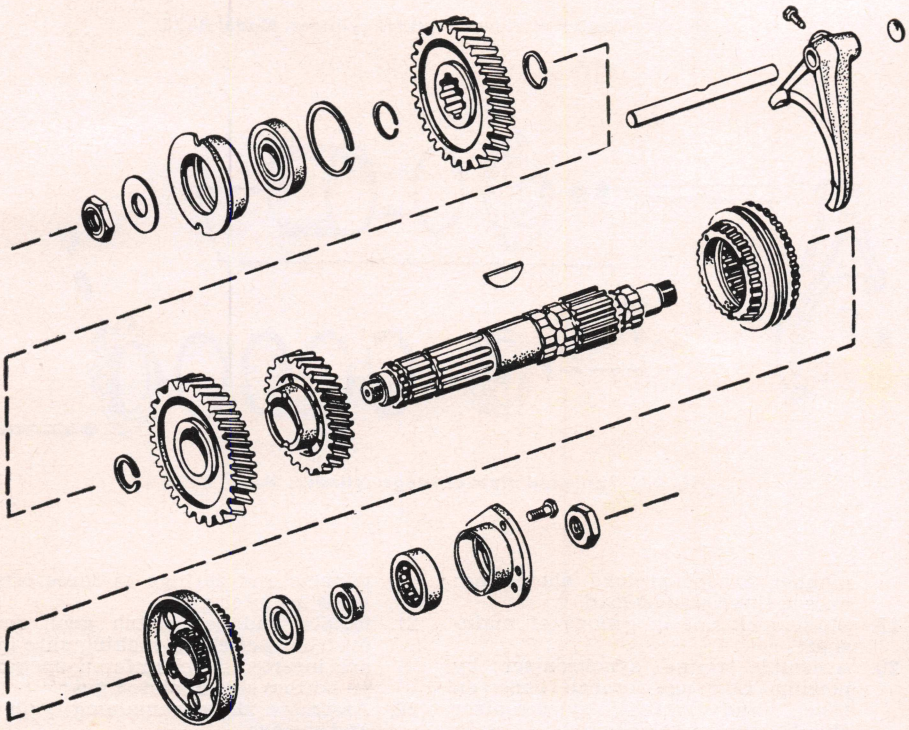

Fig. 37 Exploded view of Hi-range countershaft assembly. Model 8125

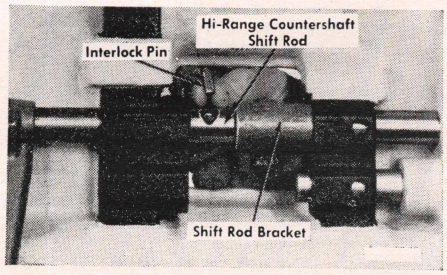

Fig. 42 Positioning interlock pin in cross hole of Hi-range countershaft shift rod. Model 8125

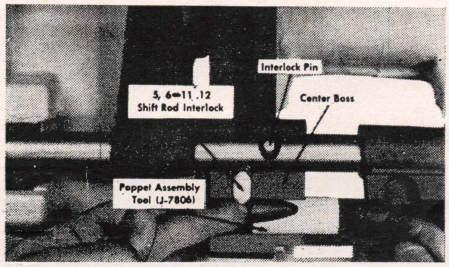

Fig. 43 Installing 5-6-11-12 shift rod. Model 8125

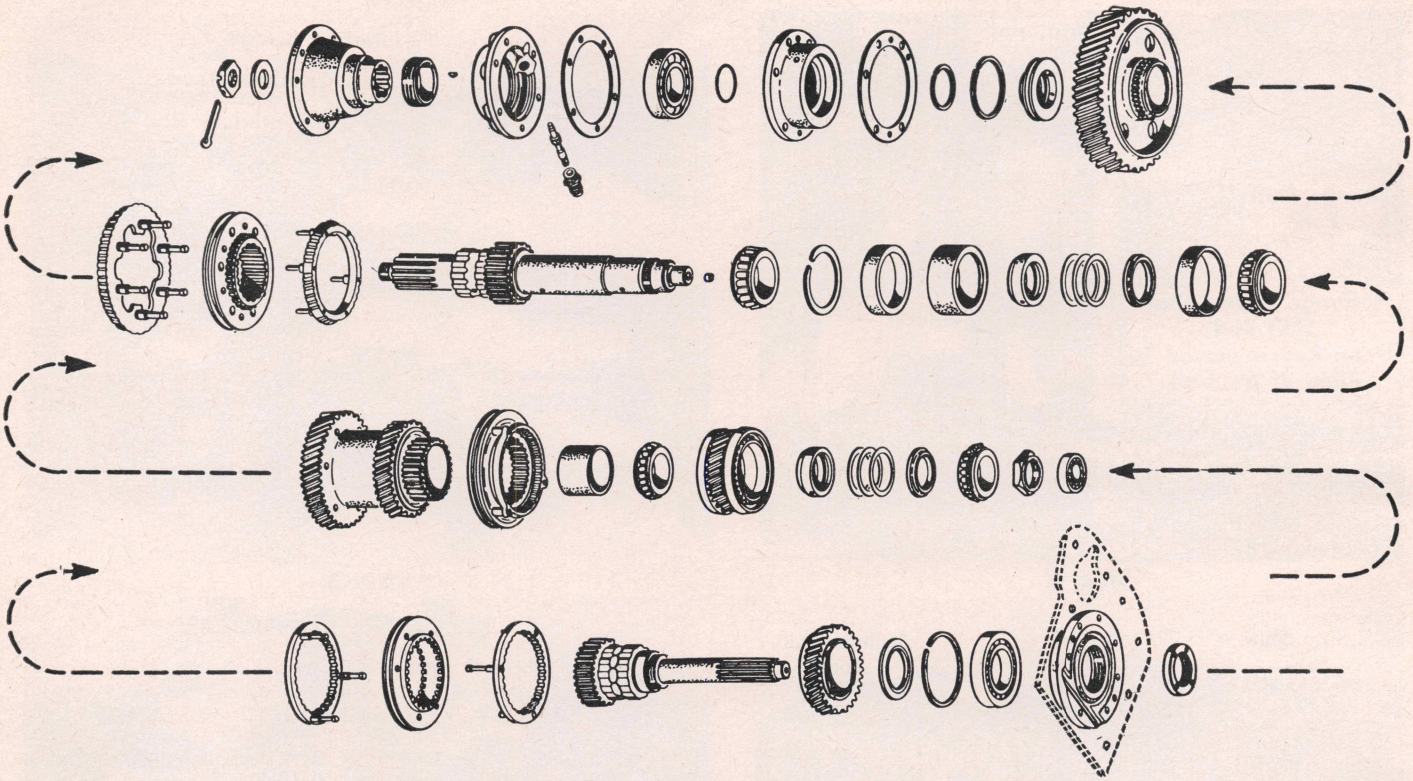

Fig. 38 Exploded view of mainshaft assembly. Model 8125

pins in synchronizer clutch gear openings. Depress poppet springs with small drift and slide pins down in clutch gear.

24. Check shift of synchronizer high and low positions by shifting clutch gear collar up and down. Clutch gear should bottom against bronze cones with each shift.
25. Coat splines and fluted bearing on mainshaft as well as clutch teeth of synchronizer and clutch gear with Lubriplate.
26. Assemble range synchronizer to mainshaft. Coat teeth of synchronizer and Lo-range and reverse gear with Lubriplate.
27. Install Lo-range and reverse gear on mainshaft.
28. Assemble splitter synchronizer by placing bronze cone on bench and setting synchronizer clutch gear on blocker shafts. Assemble three poppets and springs, one to every other hole in clutch gear. Assemble clutch gear to bronze cone by depressing poppets and springs with small drift and sliding clutch gear down on blocker shafts.
29. Accomplish same procedure for assembling other bronze ring to synchronizer clutch gear. After synchronizer is assembled, check shift by pulling up squarely on clutch gear until it bottoms against bronze cone. Turn synchronizer over and repeat shift in opposite direction.

CONTROL COVER (See Figs. 32, 33, 34)—Assemble the control cover in the reverse order of disassembly, observing the following precautions:

Fig. 41 Checking mainshaft clutch gear bearing preload. Model 8125

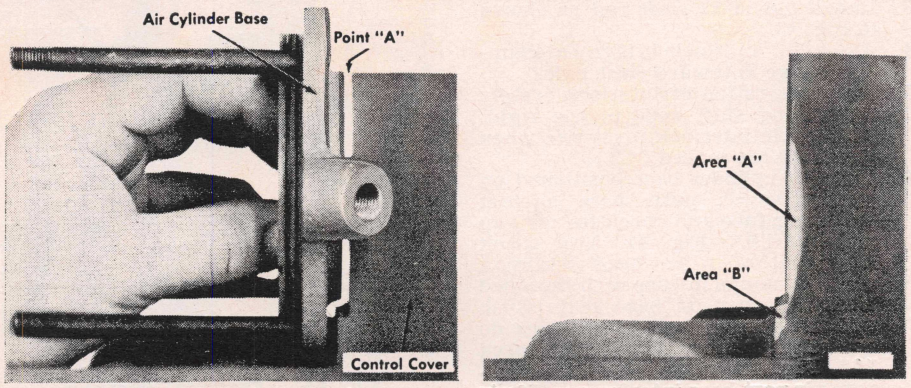

Fig. 44 Installing range air cylinder base. Model 8125

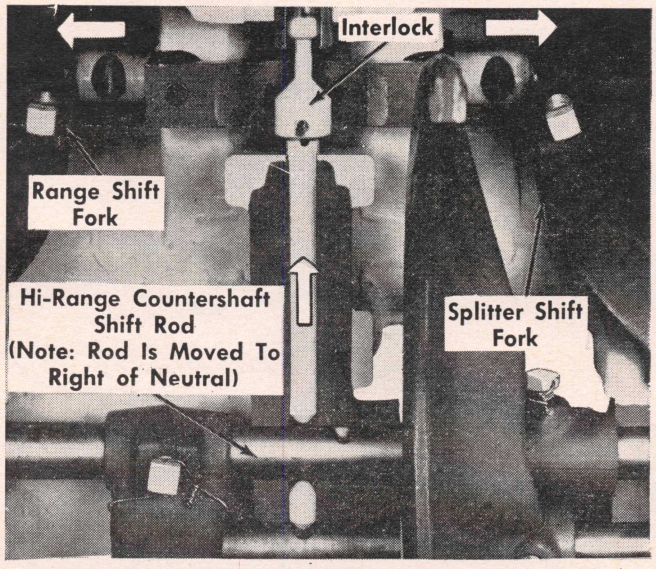

VIEW A

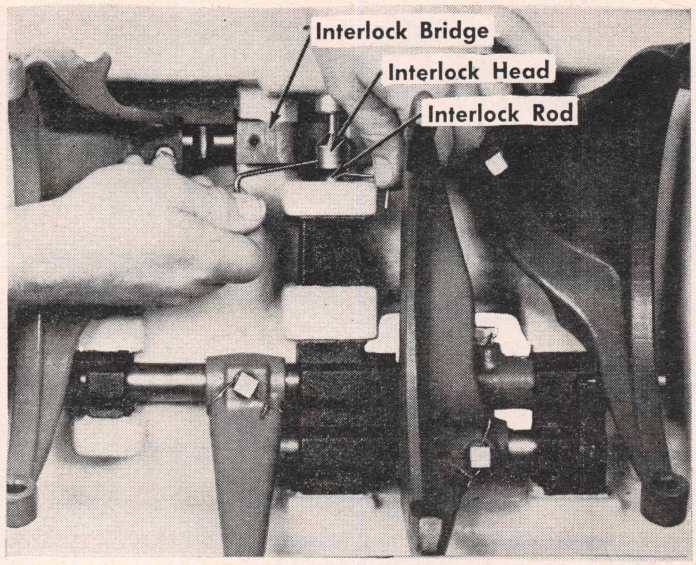

VIEW B

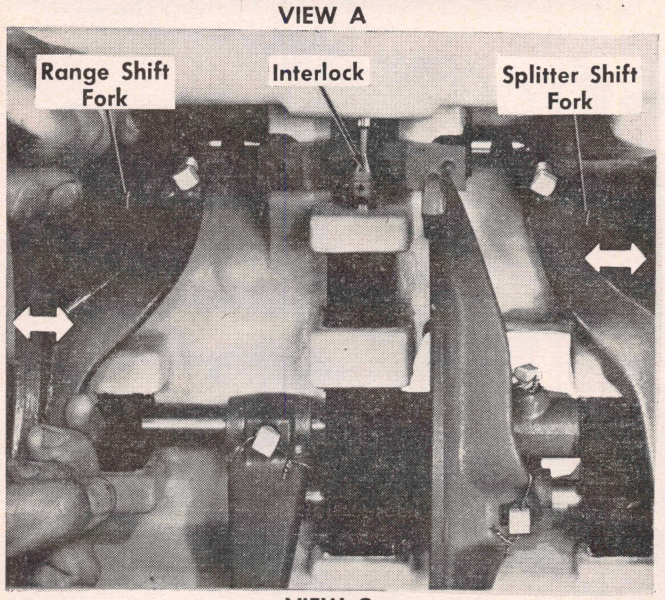

VIEW C

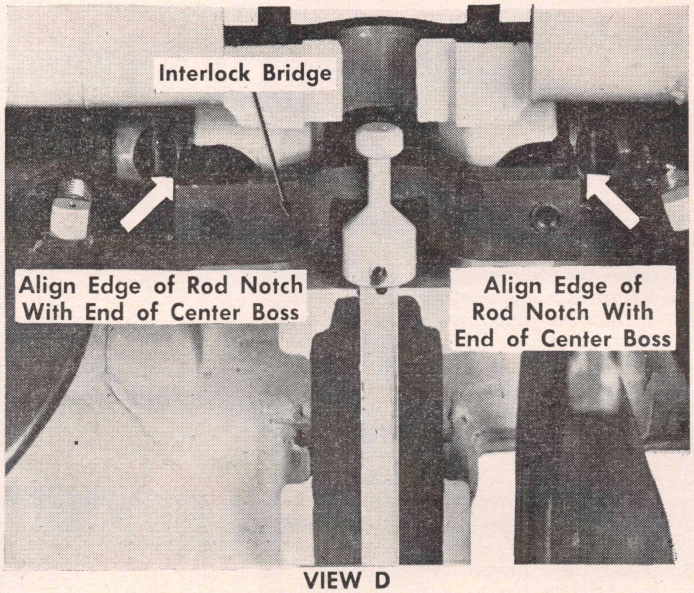

VIEW D

Fig. 45 Setting adjustable interlock to reduce end play of shift forks. Model 8125

1. Torque set screws to 45-50 ft. lbs.
2. Position interlock pin in cross hole of Hi-range countershaft shift rod as shown in Fig. 42.
3. Install 5-6-11-12 shift rod as shown in Fig. 43.
4. Assemble interlock bridge so chamfered edge is toward shift rods.
5. Check operation of interlock system by moving shift rods to the right. Adjustable interlock must rise when shift rods are moved.
6. With air cylinder base positioned on control cover, push base against mounting face and check for air gap at point "A", Fig. 44. Also check alignment of Allen head retaining screw openings in base with threaded holes in cover. If base seats flush without air gap but screw holes do not align, remove metal from area "A", Fig. 44 (right view), to eliminate air port boss interference. If air gap exists then, remove metal from area "B" to secure flush mounting.

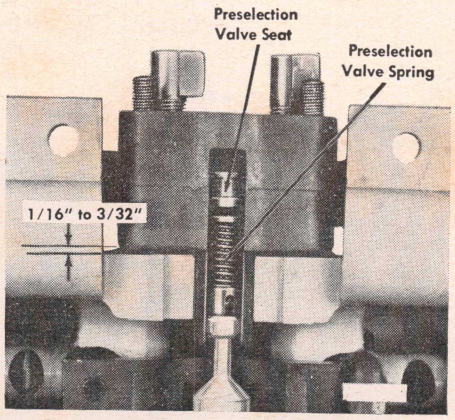

Fig. 46 Checking clearance between air control valve and control cover. Model 8125

SETTING ADJUSTABLE INTERLOCK—The adjustable interlock must be set to reduce end play of the range and splitter shift forks when they are locked in their "Hi" and "Lo" positions. The interlock length must also be checked in neutral with range and splitter shift forks midway of travel, or neutral. A tight adjustment in neutral will cause slow range and splitter shifts plus hard shifting of manual positions. To adjust, proceed as follows, Referring to Fig. 45.

1. Move range and splitter shift forks to outboard position (View A). Move Hi-range countershaft shift rod to right or left of neutral. Remove preselection valve from air control valve and set it in position on control cover to pilot interlock.
2. Lengthen interlock by holding rod and unscrewing head counterclockwise until it fits snugly against chamfered surface of the bridge (View B).

3. Check end play of range shift fork in the outboard position (View C). End play should not exceed $\frac{1}{16}$" total.
4. Check end play of splitter shift fork in the outboard position. It should be approximately the same as the range shift fork. If splitter end play is less, or zero, remove air cylinder base and measure length of the pilot, which should be $1\frac{1}{32}$".
5. Shift Hi-range countershaft to mid-point or neutral position. Move range and splitter forks to neutral point. To position them in neutral, align edge of rod notches with end of center boss (View D). Bridge must be free. If shift forks cannot be moved to neutral, the interlock is too long. Shorten it only enough to free up the bridge at this neutral position.
6. Move range and splitter forks to the inboard position and check end play of shift forks. End play should not exceed $\frac{1}{16}$" for either fork.
7. Recheck interlock setting in all positions. Interlock should not bind with the chamfer of the bridge. Check by rotating with fingers.
8. When final adjustment has been made, tighten set screw securely. A suitable bonding agent should be used to prevent screws from loosening. Secure fork set screws with lock wire.

AIR CONTROL VALVE CLEARANCE, Fig. 46—After installing a new O-ring seal to the pre-selection valve, lubricate the valve and assemble it to the air control valve. Assemble air control valve on the two housing studs. With either fork out of neutral, and nuts *not* installed, a gap of $\frac{1}{16}$" to $\frac{3}{32}$" should exist between the valve body and the control lever. This gap represents the preload of the pre-selection valve spring. If gap is less than $\frac{1}{16}$", check the pre-selection valve seat or interlock system for excessive wear.

Assemble Transmission

The transmission is assembled in the reverse order of disassembly. The sub-assemblies are installed in the following order:

1. Reverse idler gear assembly.
2. Lo-range countershaft assembly.
3. Hi-range countershaft assembly.
4. Mainshaft assembly.
5. Control cover.

Trouble Shooting Off Vehicle

The off vehicle trouble shooting is a series of checks that must be performed before the transmission is installed in the vehicle. Refer to Fig. 47 and proceed as follows:

1. Place transmission on bench and connect air hose to inlet port of air filter.
2. Remove pipe plug from top of air control valve and install pressure gauge.
3. Install suitable type cables in air control valve so splitter and range can be operated manually.
4. With remote control shift lever in neutral, pressure gauge should read 70 to 75 psi. If below, disassemble pressure regulator and add shims under spring until specified 70-75 psi reading is obtained.
5. Place shift lever in any gear position. Air pressure should bleed down slowly to zero; if necessary move range cable in and out to exhaust air from system. If gauge does not read zero after this operation, the pre-selection valve leaks.
6. With shift lever in one of the manual shift positions, pre-select range shift by moving top cable forward. Push bottom cable (selector cable) rearward. Move shift lever to neutral and rotate drive shaft by hand to complete range shift. Range shift will be audible and complete if shift lever can be moved back into gear.
7. Complete several high and low range shifts to make sure shift is operating properly.
8. With shift lever in one of the manual shift positions, pre-select splitter shift by moving bottom cable forward (push range cable rearward).
9. Move shift lever to neutral and rotate drive shaft by hand to complete splitter shift. The splitter shift will be audible and complete if shift lever can be moved back into gear.
10. Complete several splitter shifts to make sure shift is operating properly. If operation of range and splitter shifts are correct, and no air leakage is evident, install transmission in vehicle in reverse order of its removal.

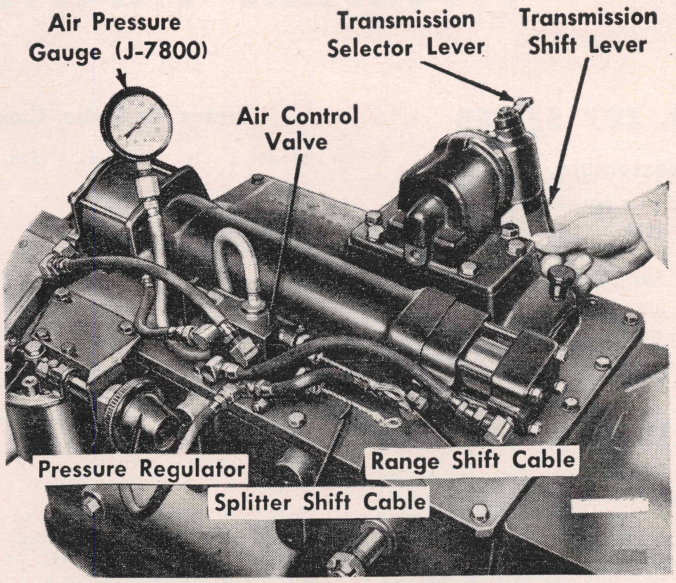

Fig. 47 Checking operation of range and splitter shifts. Model 8125

Trouble Shooting On Vehicle

SHIFTING COMPLAINTS—Abnormal shifting is not necessarily caused by the transmission itself. This is sometimes caused by inadequate lubrication, improper adjustment, or defective parts of the remote control linkage and gearshift island controls. Before attempting to trouble shoot the transmission, make certain that the remote control cables or rods are operating properly and are adequately lubricated. If they are, check the transmission as follows:

AIR PRESSURE SETTING CHECK

1. Start engine and build up air pressure to full line pressure.
2. Shut off engine and place shift lever in 5-6-11-12 gear position.
3. Remove pipe plug from top of air control valve and install pressure gauge in pipe plug opening (see Fig. 47).
4. Move shift lever into neutral and check pressure gauge reading. If reading is not between 70 and 75 psi, adjust pressure regulator by disassembling and adding shims under spring until proper pressure is obtained.

AIR CONTROL SYSTEM CHECK—With air pressure gauge still installed and with correct reading of 70-75 psi, shift transmission back into 5-6-11-12 gear position. This shuts off the air inlet supply and gauge reading will start to fall off toward zero. However, if air pressure stays up, move range "T" handle up and down slowly to exhaust air trapped in range and splitter air cylinders. Air pressure should drop and stay at zero. If gauge rises from zero reading, the pre-selection valve in the air control valve is leaking and must be repaired or replaced.

If pressure bleeds off and remains at zero, then place shift lever back into neutral and check for air leaks at the four exhaust ports on rear of control valve. Check for leakage by covering exhaust ports with fingers. Slow or minor leaks are acceptable. However, audible or excessive leakage must be corrected. Air leaking out exhaust ports can originate in air cylinders as well as the control valve.

WARNER TRANSMISSIONS

T9, T97 SERIES

Disassemble, Fig. 1

1. Take off the transmission cover.
2. Unscrew the nut from the universal flange.
3. Remove the hand brake mechanism.
4. Remove universal flange.
5. Remove main drive gear bearing retainer and pull drive gear out through front.
6. Take off mainshaft rear bearing retainer oil seal and speedometer drive gear.
7. Before removing the mainshaft, chalk-mark the relationship of the mainshaft splines with the mating splines in the sliding gears so that these parts may be assembled in the original position, as the gears are a selective fit on the mainshaft splines.
8. Grasp the mainshaft gears and pull the mainshaft and rear bearing out through the rear. Then lift out the loose gears.
9. Remove the counter shaft lock plate, push the shaft through the rear and lift out the cluster gear.
10. Drive out the reverse shift rail and lift out the fork.
11. Push the reverse idler shaft out through the rear and lift out the gear.

Index & Lube Capacity

Model	Speeds	Oil, Pts.	Page
T9, T9A	4	6	164
T85	3		164
T87D	3	6	165
T87E	3	5½	165
T89B	3	3	166
T89C	3	3½	166
T97	4	7	164
T98, T98A	4	8	168

Reassembly

Reverse the order of the above procedure to assemble the unit. And when installing the mainshaft, be sure to match the marked gear splines with the mainshaft splines.

T85 SERIES

Three Speed, Fig. 2

1. To disassemble, remove gearshift housing.
2. Remove mainshaft nut and parking brake.
3. Remove U-joint flange, speedometer gear and spacer.
4. Remove mainshaft and rear bearing retainer rearward out of case as a unit.
5. Remove mainshaft pilot bearing.
6. Remove main drive gear bearing retainer. After removing large snap ring, tap drive gear and bearing back into case, removing it through rear of case.
7. Drive countershaft backward out of case and remove cluster gear assembly.
8. Remove reverse idler gear.
9. To disassemble mainshaft, remove snap ring from its front end. Mark relationship of synchronizer hub and sleeve and slide synchronizer and gears off shaft.

Assemble Transmission

1. Install reverse idler gear and shaft with chamfered teeth ends toward front.
2. Install cluster gear assembly in bottom of case. Tang on front washer fits into slot in case thrust face. Tab on rear steel washer must be up.
3. Install main drive gear bearing and snap ring from front until snap ring bottoms on case.
4. Install drive gear retainer without gasket and finger tighten retainer bolts.
5. Install oil slinger on drive gear shaft with grease and with dished side away from bearing.
6. Install drive gear shaft with oil slinger in case and shaft into bearing.
7. Remove drive gear retainer and install spacer washer and thickest snap ring that will fit.. Snap rings are available in thicknesses of .086" to .103".
8. Tap drive gear shaft forward out of case as far as gear will allow. Then install mainshaft pilot in bore of drive gear, using grease to hold rollers in place.
9. Install synchronizer stop ring on rear end of drive gear shaft, coating inside of stop ring with grease.

Assemble Mainshaft

1. Press rear bearing on mainshaft. Install rear snap ring into rear bearing retainer housing and tap mainshaft with bearing into retainer. Install thickest snap ring that will fit in front of rear bearing. Snap rings are available in thicknesses of .088" to .100".
2. Assemble gears and synchronizer on mainshaft. Grease synchronizer stop ring before assembling, and make sure stop rings are free.
3. Install mainshaft, being sure that one of the pilot bearings is not forced off position and block oil hole in mainshaft.
4. Tap main drive gear to rear until snap ring seats on case.

Final Assembly

1. Turn transmission to help align cluster gear to install countershaft.

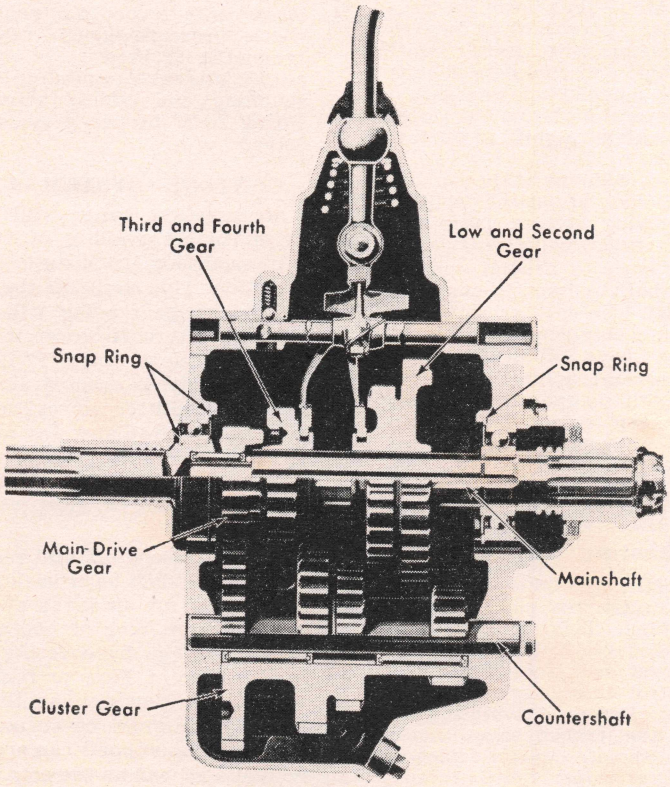

Fig. 1 Warner T9, T97 Series four speed transmission

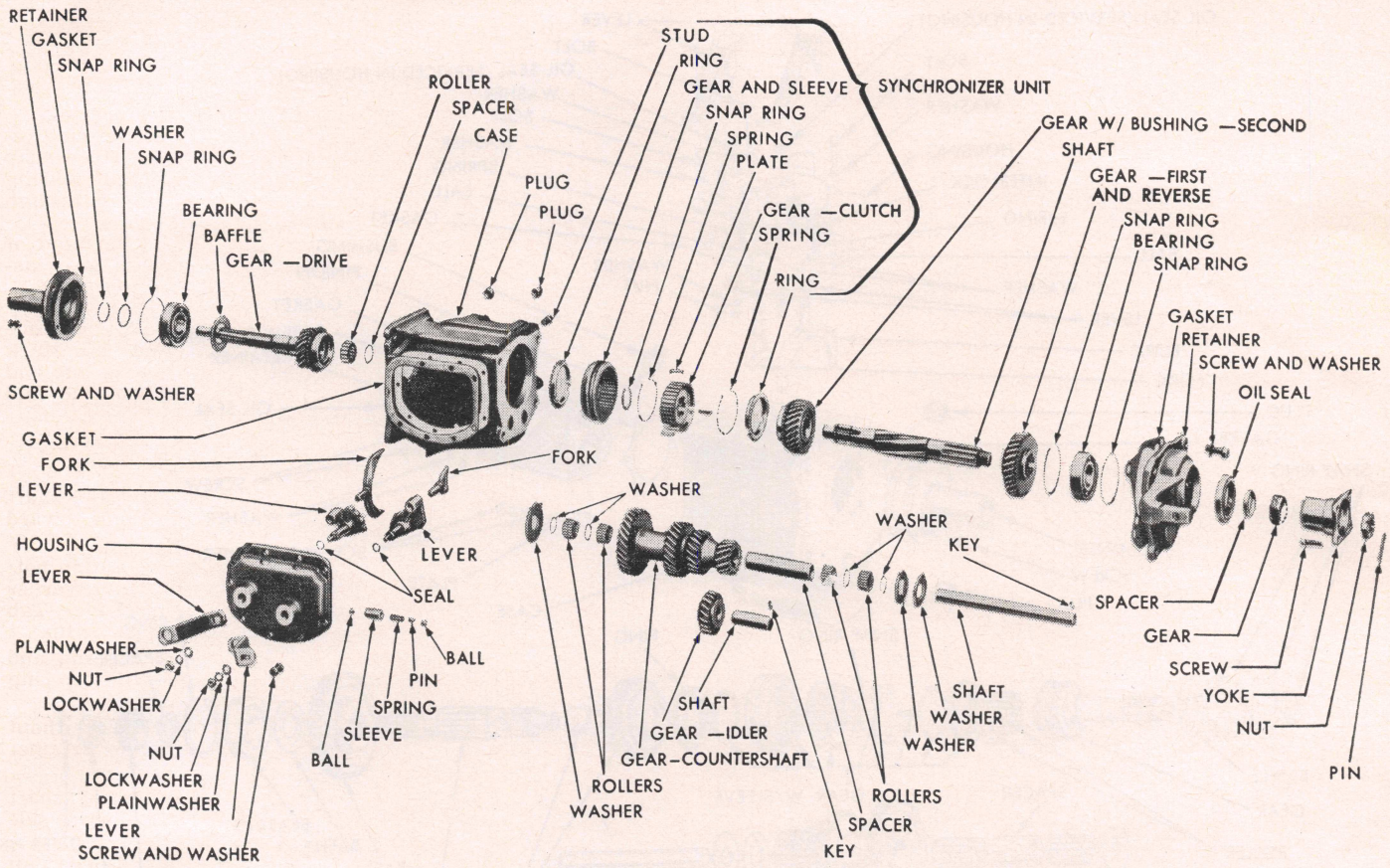

Fig. 2 Warner T85 Series three speed transmission

2. When countershaft is close to end of case, install key and drive it into case.
3. Turn rear bearing retainer into position and torque retainer bolts to 65-75 ft. lbs.
4. Install new gasket on main drive gear bearing retainer, install retainer and torque bolts 25-30 ft. lbs. Select gasket or gaskets that will seal lubricant and prevent end play between snap ring and retainer. Gaskets are available in thicknesses of .10″ to .025″.
5. Install spacer, speedometer drive gear and flange.
6. Install parking brake.
7. Shift transmission into neutral. Place 2nd-3rd fork on clutch gear sleeve and place gearshift housing with new gasket on case.

Gearshift Linkage

For any adjustment to bring shift lever to horizontal plane with lever in neutral position, adjust length of 2nd-3rd control rod at its swivel.

The crossover movement of lever should be made without binding or interference. If slots in lever are not aligned, the gearshift tube pin strikes corner of slot. To bring slots in line, adjust low-reverse rod.

T87 SERIES

Three Speed, Figs. 3 and 4

1. Remove gearshift housing.
2. Remove parking brake.
3. Remove mainshaft bearing retainer.
4. Drive countershaft out through rear of case.
5. Use puller to remove mainshaft bearing.
6. Remove input shaft retainer and tap shaft and bearing as far forward as possible.
7. Remove mainshaft assembly.
8. Remove input shaft. If bearing is to be replaced, assemble with thickest snap ring that will fit.
9. Use puller to remove reverse idler shaft.
10. Remove reverse idler gear and countershaft gear cluster.

Assemble Transmission

1. Install reverse idler gear and shaft.
2. Install cluster gear assembly with front thrust washer tip hooked into groove on inside of case. Check end play (.006-.020″). Change thrust washers as required.
3. Install assembled mainshaft. Place a short 2 x 4 block between input shaft and mainshaft. Slide mainshaft bearing baffle and bearing onto shaft. Baffle must be installed so it does not rub bearing outer race. Drive bearing onto shaft.
4. Install mainshaft pilot rollers in input shaft, holding them with grease.
5. Place front blocking ring on synchronizer and start input shaft bearing in case.
6. Drive mainshaft bearing into case.
7. Tap input shaft and bearing into place. Install retainer without gasket and tighten bolts to bottom retainer on snap ring. With feeler gauge, check clearance between gasket surface and case. Select a gasket or gaskets that will seal oil and eliminate all clearance.
8. Raise cluster gear and insert countershaft. Then install retainer in notches in countershaft and reverse idler shaft. Drive both shafts toward front so that retainer is tight against gasket and torque bolts to 25-37 ft. lbs.
9. Install speedometer gear and spacer, mainshaft bearing retainer and gasket, and parking brake. Tighten output shaft nut to 90-125 ft. lbs.
10. Install gearshift housing.

OIL SEAL (SERVICED IN HOUSING)
LEVER
BOLT
BOLT
OIL SEAL (SERVICED IN HOUSING)
WASHER
WASHER
BOLT
HOUSING
WASHER
INTERLOCK
SPRING
SPRING
BALL
GASKET
BALL
BUSHING
WASHER
"C" WASHER
NUT
PINION
LEVER
GASKET
SCREW & WASHER
FORK
RETAINER
FORK
PLUG
OIL SEAL
GASKET
SNAP RING
SCREW
BEARING
WASHER
RETAINER
SCREW & WASHER
SCREW
PLATE
PLUG
CASE
SNAP RING
RING
SNAP RING
SPACER
BAFFLE
GEAR
SPACER
GEAR, W/SLEEVE
ROLLER
BEARING
BAFFLE
COTTER PIN
GEAR
NUT
SHAFT
GEAR
WASHER
COUNTERSHAFT
GEAR W/BUSHING
WASHER
WASHER
BEARING
GEAR
GEAR W/BUSHING
SHAFT

Fig. 3 Warner T87 Series three speed transmission

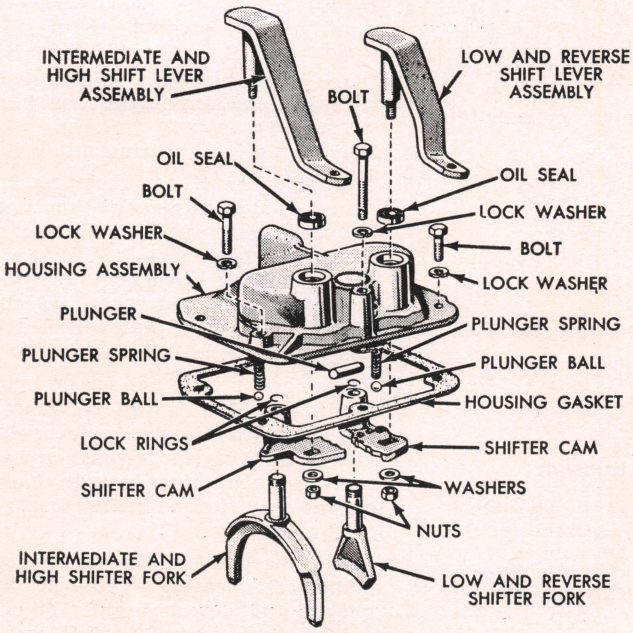

Fig. 4 Warner T87 Series gearshift housing

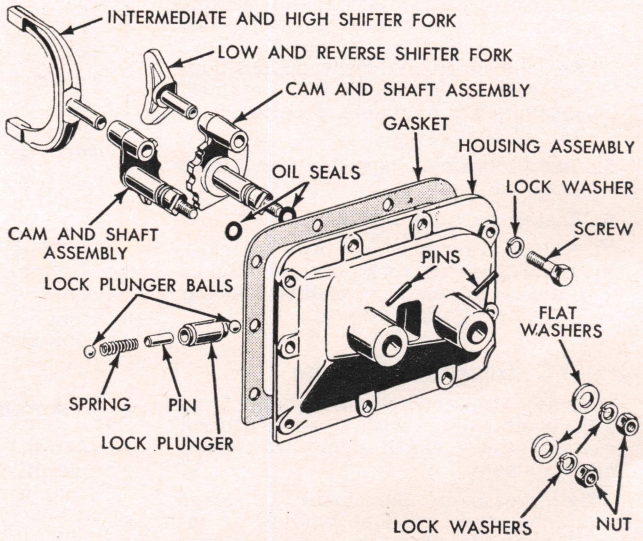

Fig. 6 Warner T89 Series gearshift housing

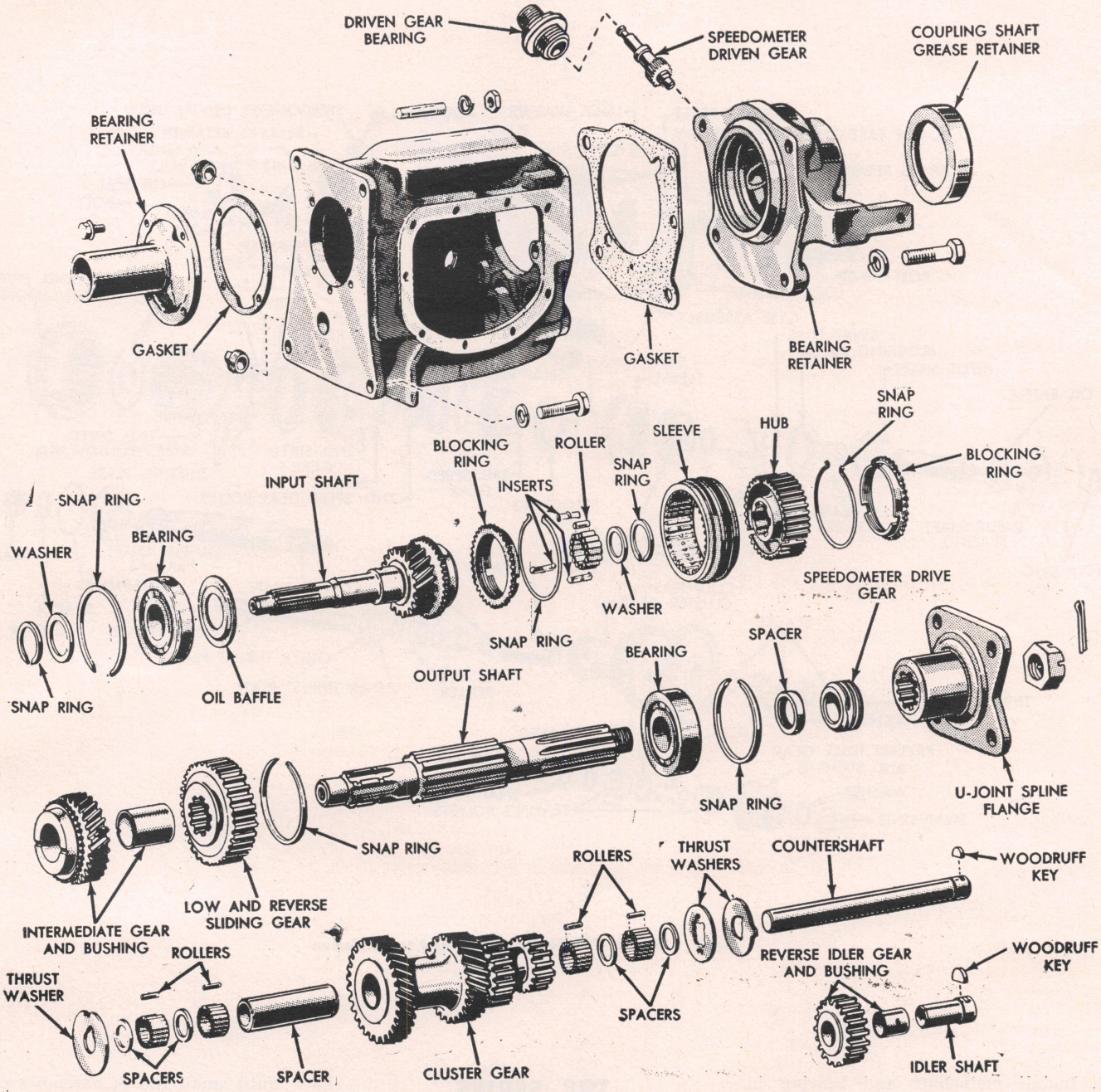

Fig. 5 Warner T89 Series three speed transmission

T89 SERIES

Three Speed, Figs. 5 and 6

1. Remove gearshift housing.
2. Remove parking brake.
3. Tap main drive gear forward as far as possible.
4. Push countershaft out of rear of case.
5. Remove mainshaft assembly.
6. Remove main drive gear; then bearing.
7. Drive reverse idler gear shaft out of rear of case.
8. Lift out countershaft gear cluster.
9. Disassemble mainshaft.

Assemble Transmission

1. Place assembled countershaft gear cluster in case. Tang on front thrust washer fits into slot in case surface. Tab on rear steel washer must be up.
2. Install countershaft. Check end play (.006-.020"). Change thrust washers as required.
3. Install reverse idler gear shaft with chamfered teeth ends to front. Drive shaft in nearly flush with case and insert Woodruff key.
4. Tap input shaft bearing in case until snap ring bottoms in case. Install bearing retainer without gasket and barely tighten retainer capscrews. Lightly coat baffle with grease to hold it in place and install it on input shaft at rear of bearing with dished side away from bearing. Drive shaft into bearing with hard wood block.
5. Remove input shaft bearing retainer and install spacer washer and snap ring on input shaft. Install thickest snap ring that will fit. Then tap input shaft as far forward as possible and install pilot bearing rollers, holding them with grease.

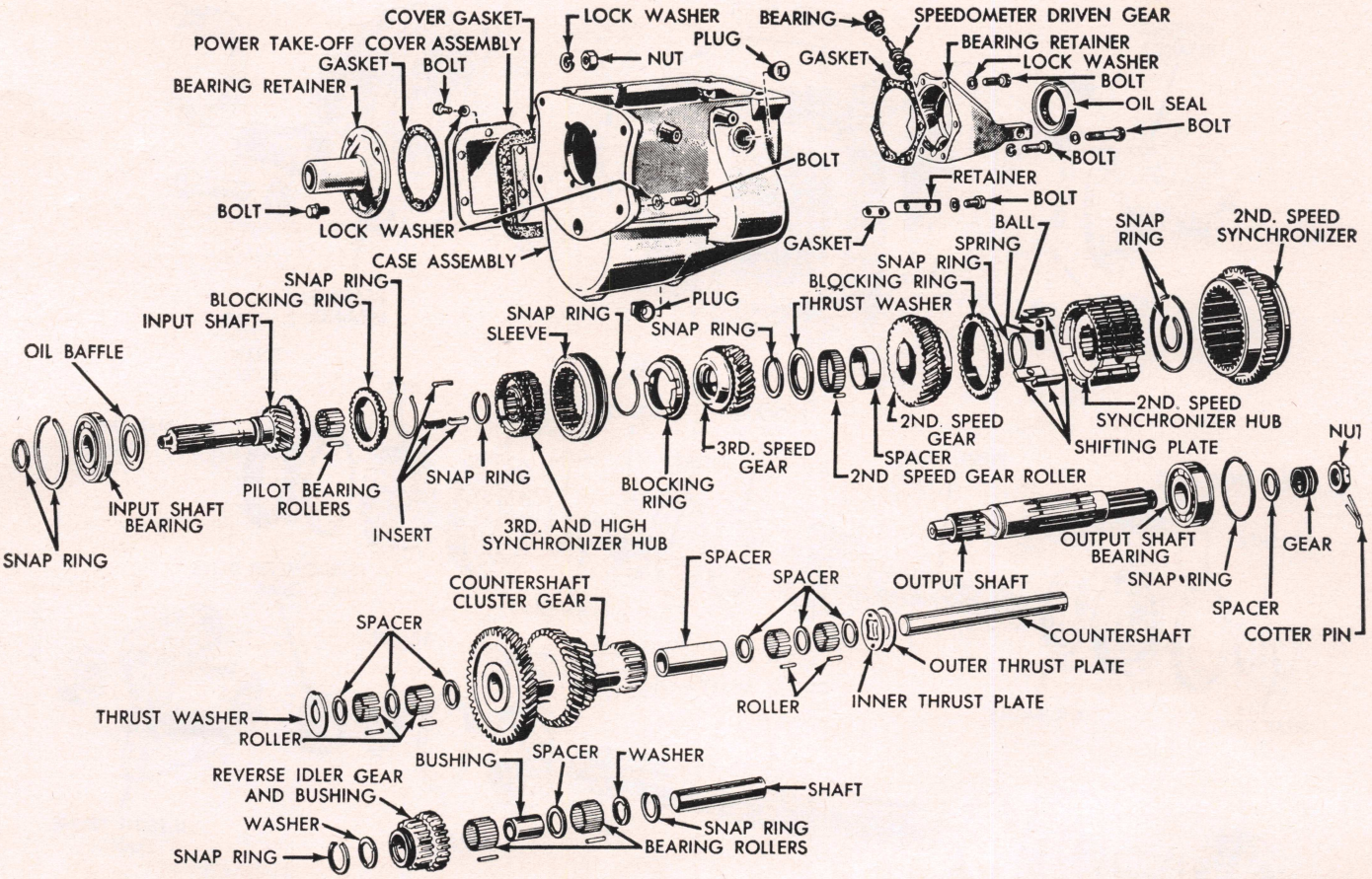

Fig. 7 Warner T98 Series four speed transmission

6. Install mainshaft and bearing in bearing retainer casting, using the thickest snap ring that will fit.
7. Assemble mainshaft and secure with snap ring at front of shaft.
8. With new gasket, install mainshaft rear bearing retainer.
9. Tap input shaft bearing toward rear until outer snap ring bottoms on case.
10. Install countershaft gear cluster and insert Woodruff key in countershaft.
11. Torque mainshaft rear bearing retainer bolts to 65-75 ft. lbs.
12. Install and tighten input shaft bearing retainer to 25-30 ft. lbs., using a gasket or gaskets that will seal lubricant and prevent end play between snap ring and retainer.
13. Install parking brake.
14. Install shift housing cover with new gasket.

T98 SERIES

Four Speed, Figs. 7 and 8

1. Remove parking brake.
2. Remove mainshaft bearing retainer.
3. Remove countershaft-reverse idler shaft lock.
4. Remove gearshift housing.
5. Remove mainshaft bearing.
6. Remove input shaft bearing.
7. Drive out countershaft.
8. Remove input shaft through front end of case.
9. Pull out reverse idler shaft.
10. Remove reverse gear shifter arm from case.
11. Remove mainshaft assembly through top of case.
12. Remove power take-off cover and roll cluster gear toward top of case until small end of assembly can be pushed through mainshaft bearing bore in case.

Assemble Transmission

1. Position case with power take-off opening downward.
2. Hold thrust washer at front end of inner thrust plate at rear end of cluster gear to prevent rollers from falling out of gear. Position gear in bottom of case and install outer thrust plate.
3. Install reverse idler gear and shaft with slot in end of shaft down at rear face of case.
4. Install countershaft through cluster gear with slot in end of shaft facing downward. Cluster gear end play should be .006-.020". Change thrust washers as required.

5. Install pilot rollers in input shaft. Place baffle on shaft so it does not rub bearing race. Position input shaft in bore of case, working from inside of case. Install high speed synchronizer blocking ring on input shaft gear.
6. Install mainshaft assembly, inserting forward end in input shaft. Use a stop yoke tool over synchronizer rings to prevent jamming rings.
7. Install input shaft bearing and install thickest snap ring that will fit.
8. Install input shaft and bearing in case and install snap rings on both bearings.
9. Install input shaft retainer without gasket. Tighten bolts enough to bottom retainer on snap ring. Measure clearance between retainer gasket surface and case and select a gasket or gaskets that will seal oil and eliminate clearance. Tighten bolts to 25-30 ft. lbs.
10. Slide second speed synchronizer to rear and install reverse gear shifter arm.
11. Install reverse idler shaft-countershaft retainer and gasket. Torque retainer bolts to 25-37 ft. lbs.
12. Install speedometer gear and spacer, mainshaft bearing retainer and gasket. Make sure longest retainer bolt is in proper hole. Torque bolts to 25-35 ft. lbs.
13. Install gearshift housing and torque bolts to 30-35 ft. lbs.
14. Install U-joint flange and parking brake drum. Torque mainshaft nut to 90-125 ft. lbs.

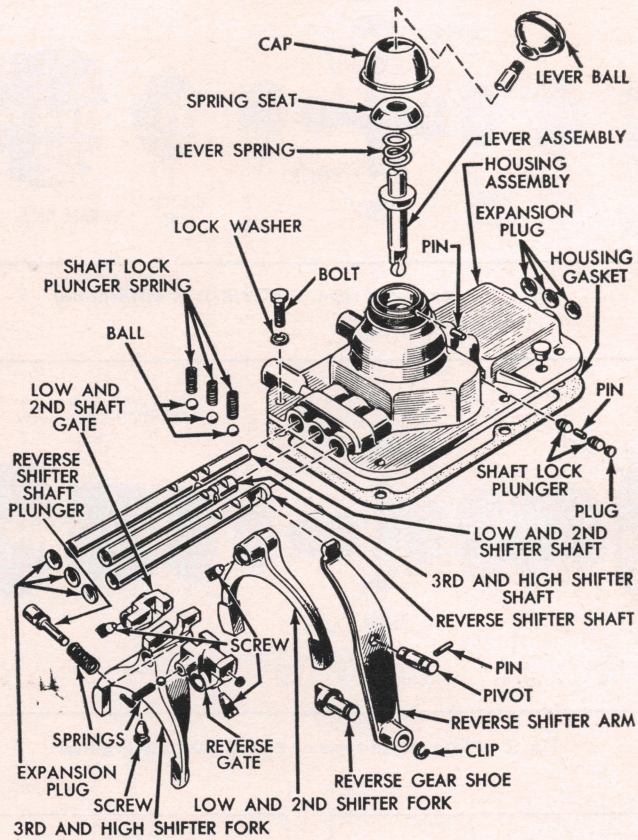

Fig. 8 Warner T98 Series gearshift housing

LOCKING DIFFERENTIALS

THE MAIN PURPOSE of these differentials is that they supply a greater percentage of torque to the wheel with better traction and still furnishes to the wheel with poorer traction as much torque as it is able to absorb under the circumstances.

In the conventional differential the wheel easiest to turn receives the power. Therefore, when traction conditions under the rear wheels are not the same, the driving force is limited by the wheel with the poorer traction (easiest to turn) even though one wheel is on good traction surface.

These locking differentials do not permit shock loads or full engine torque to be transmitted to one axle shaft. They provide power to both rear wheels and maintain the differential action that is necessary when the vehicle is turning a corner to permit the outer wheel to turn faster than the inner wheel.

Service Note

"On car" type wheel balancers are not recommended for use on rear wheels of cars equipped with a locking differential. The rear wheel will drive if in contact with the ground or with a block even though the opposite wheel is raised. *However, this type of wheel balancer may be used by removing the wheel opposite of the one being balanced with the complete assembly raised.*

POWR-LOK

Fig. 1 shows the cone clutch type whereas Fig. 2 illustrates the plate clutch type. Each assembly consists of two case halves, two cross pins held together by a thrust block, differential pinions, side gears, and clutch rings (Fig. 1) or clutch plates (Fig. 2).

The cross pins are made with a movable joint at the center to permit each one to move independently while in continuous engagement. The pin ends are made in the form of a V, and a similar V is machined in each case half to provide a ramped cam surface.

In Fig. 1, the clutch ring is fitted over each bevel side gear and mates with a cone surface machined in each half of the differential case.

In Fig. 2, the clutch plates operate between the flat surface on the clutch retainer and the machined surface in each half of the differential case.

Operation

As the vehicle is put in motion, the driving force moves the cross pin up the ramp of the cam surface, applying a load to the clutches and restricts turning of the differential through the friction of the clutches on the mating surfaces in the differential case, Fig. 3. This provides a torque ratio between the axle shafts which is based on the amount of friction in the differential and the amount of load that is being applied to the differential.

When turning a corner this process is, in effect, partially reversed, Fig. 4. The differential gears become a planetary gear set, with the gear on the inside of the curve becoming the fixed gear of the planetary. The outer gear of the planetary overruns as the outside wheel on the curve has a further distance to travel. With the outer gear overrunning and the inner gear fixed, the differential pinions are caused to rotate, but since they are restricted by the fixed gear, they must first move the cross pins back down the cam surface, relieving the thrust load of the clutch on its mating surface in the differential case. Thus when turning a corner, the differential,

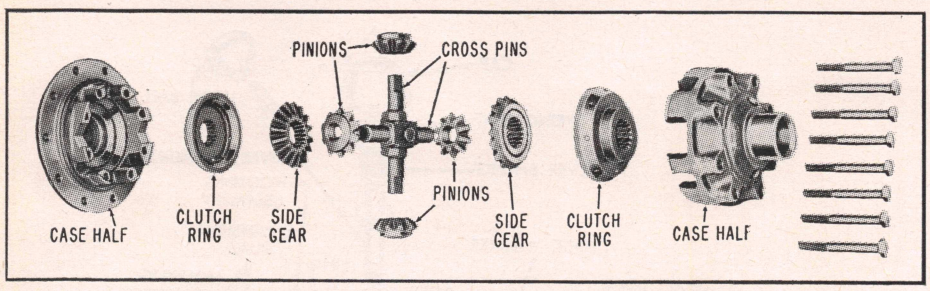

Fig. 1 Cone clutch type of POWR-LOK differential

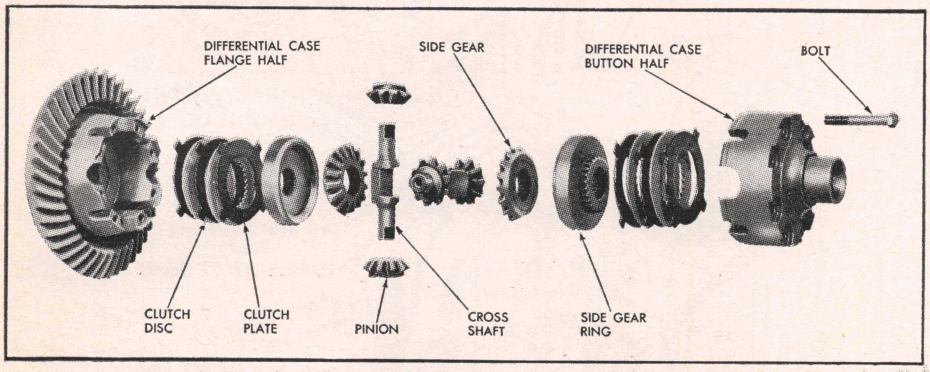

Fig. 2 Plate clutch type of POWR-LOK differential

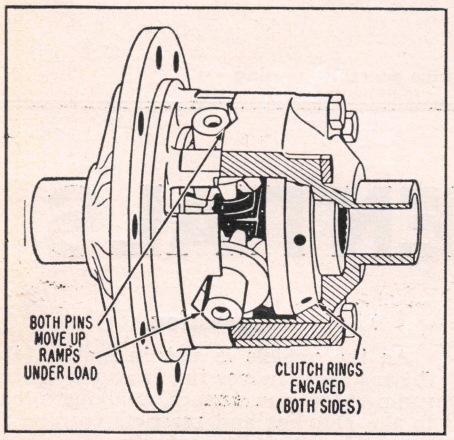

Fig. 3 Differential action when moving straight ahead

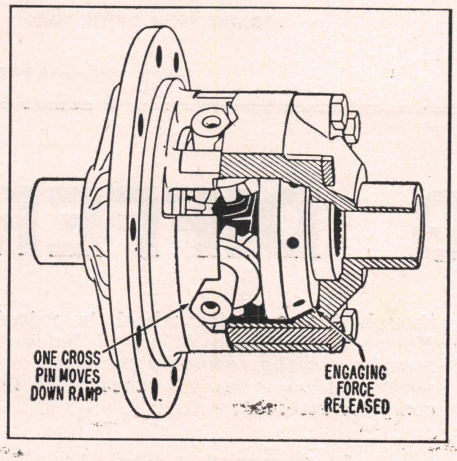

Fig. 4 Differential action when turning a corner

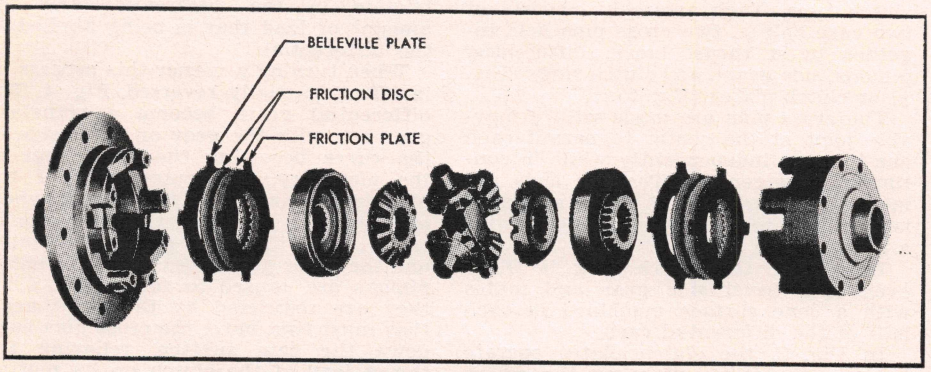

Fig. 5 Plate clutch type of POWR-LOK differential (4 stack unit) with Belleville spring plates at outside of stacks.

for all practical purposes, is similar to a conventional differential and the wheels are free to rotate at different speeds.

With locking differentials, certain characteristics must be taken into consideration. Under average driving conditions, such as straight ahead, reverse, extreme right and left turns, the operation will be the same as with the conventional differential. However, a little more backlash may be noticed due to the lateral movement of the differential cross pins. In addition, a slight chatter may occur under surge torque with one wheel on a slippery surface. These conditions are considered normal.

CAUTION—Do not attempt to spin a wheel under power with a jack under only one side; both wheels must be clear of the ground. If one wheel remains in contact with the ground, there is a possibility that when spinning the other wheel, friction of the clutch rings or clutch disc may set the vehicle in motion.

Servicing Cone Clutch Type

This type differential, Fig. 1, must be replaced as a unit as individual parts are not available. It is furnished less ring gear and side bearings.

Servicing Plate Clutch Type

Before disassembling the differential, scribe a line across the differential case halves for alignment upon reassembly. Then, after removing the attaching bolts, separate the case halves and remove the differential parts.

Note the relative position of the friction plates, friction discs and Belleville spring plates (if used) so that they may be reassembled in the proper sequence, Figs. 5, 6 and 7.

Inspect all parts. See that there are no worn, cracked or distorted clutch plates. All parts must be free of nicks, burrs or any imperfections that will reduce the efficient operation of the unit.

1. Assemble differential as suggested in Figs. 5, 6 and 7.
2. Make sure the side gear retainer will rotate with a slight drag when in the case. Repeat for opposite side.
3. Install side gear on ring gear flange half.
4. With ring gear flange half in a vertical position, install one shaft and gears, making certain that notch in shaft is up.
5. Install side gear in other half of case.
6. Hold the remaining case half through the bearing trunnion and install it on the ring gear flange half, being sure scribed mark made previously is in alignment.
7. Insert axle shafts to align side gear ring with bevel side gear, Fig. 8. If this is not done there may be some difficulty when installing axle shafts during final assembly. Tighten attaching bolts evenly to 35-45 ft-lb.
8. Check clearance between pinion mate shaft and the V of the case, Fig. 9. Do this by placing shim stock or feeler gauges on both ends of the same shaft and on opposite sides of the V. The clearance should be approximately .015".

Installation Note

Make sure the spline end of the axle shaft does not interfere with the pinion mate shafts. This can be checked with a steel tape by measuring from the bottom of the axle shaft bearing bore to the pinion mate shafts. Then measure the axle shafts from the corresponding point of the bearing to the end of the spline. The minimum clearance required is ⅛". Grind off the spline end of the axle shaft if it is too long. Check the other axle shaft in the same manner.

CAUTION: Use rear axle lubricant of the type specially recommended for locking differentials. Failure to use the proper lubricant will result in chattering of other serious malfunction.

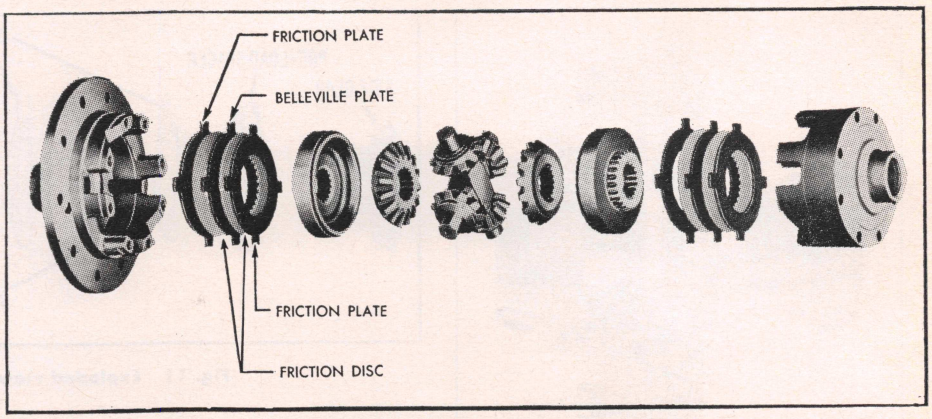

Fig. 6 Plate clutch type of POWR-LOK differential (5 stack unit) with Belleville spring plates in center of stacks

CORVAIR TYPE

This type locking differential, Fig. 10, uses a clutch pack only on one side of the differential. Disassemble as follows:

1. Remove ring gear from differential case.
2. Chisel or punch alignment marks on case and cover, remove two flat head screws and separate case and cover.
3. Remove right-hand side gear, clutch pack preload spacer and clutch pack.

Assembly

1. Lightly oil clutch plates and side gear. Install clutch pack in differential cover in the sequence shown in Fig. 11.
2. Install side gear in clutch pack, making sure its splines engage clutch plate splines.
3. Align differential case and cover and assemble ring gear with improvised guide pins. Remove guide pins and install ring gear bolts, drawing case and cover together. Tighten bolts to 40-60 ft-lb.

Clutch Pack Preload Test

1. Clamp differential assembly in vise with soft jaws.
2. Insert a spare disassembled axle shaft yoke into one side gear. Slide a piece of 1" bar stock at least 14" long into yoke, Fig. 12.
3. With scale positioned 12" from centerline, check torque necessary to rotate yoke and side gear. Torque reading should be 50-70 ft-lb.

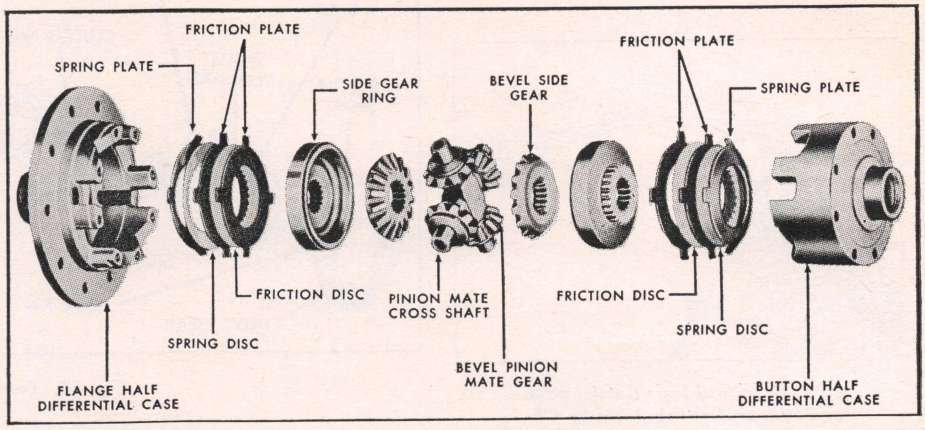

Fig. 7 Plate clutch type of POWR-LOK differential (5 stack unit) with Belleville spring plates at outside of stacks

FORD TYPE

Disassembly

1. Referring to Fig. 13, mark one differential bearing cap and the mating support to help position the parts properly during assembly of the carrier.
2. Remove bearing adjusting nuts and lift differential assembly out of carrier.
3. Remove differential bearings.
4. Loosen *alternate* drive gear attaching bolts evenly to release the spring pressure between differential case and cover.
5. Remove differential case cover and then the drive gear.

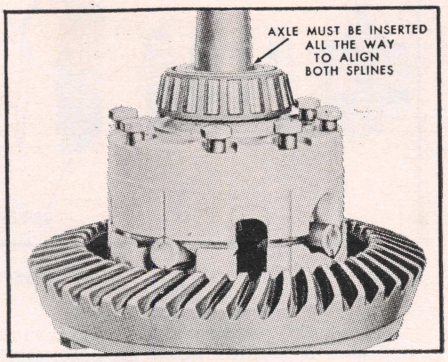

Fig. 8 Aligning splines of side gear and side gear ring before tightening attaching bolts

6. Remove clutch plates.
7. Remove two Belleville springs.
8. Remove clutch hub, side gear and thrust washer.
9. Drive out differential pinion shaft lock pin.
10. Drive out differential pinion shaft. Then remove pinion gears and thrust washers.

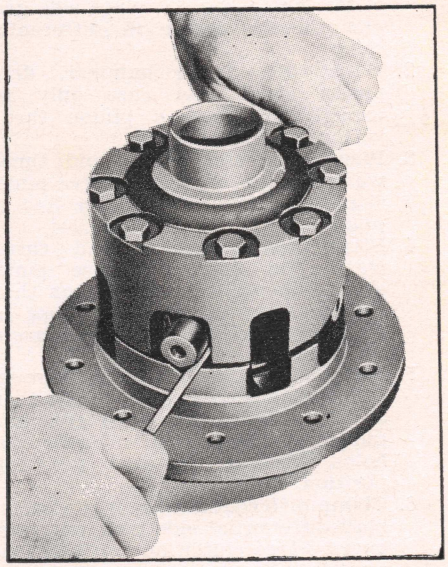

Fig. 9 Checking clearance between pinion mate shaft and V in case. Feeler gauges must be inserted on both ends of same shaft and on opposite sides of V

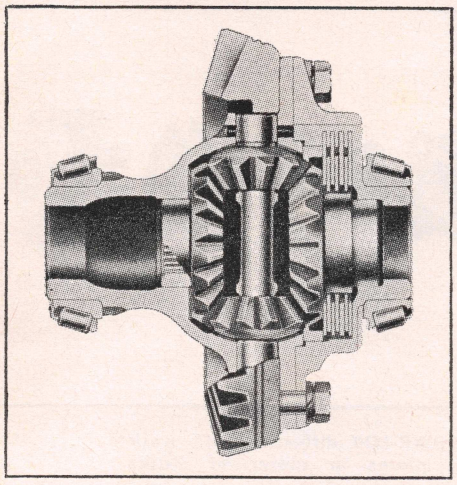

Fig. 10 Cross section of Corvair locking differential

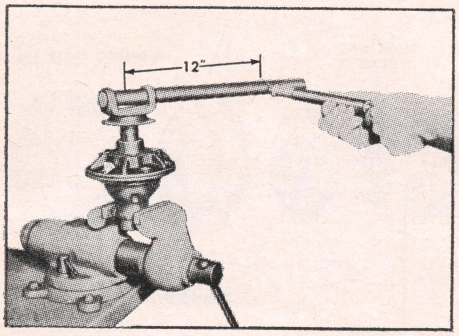

Fig. 12 Checking clutch pack preload on Corvair locking differential prior to installation

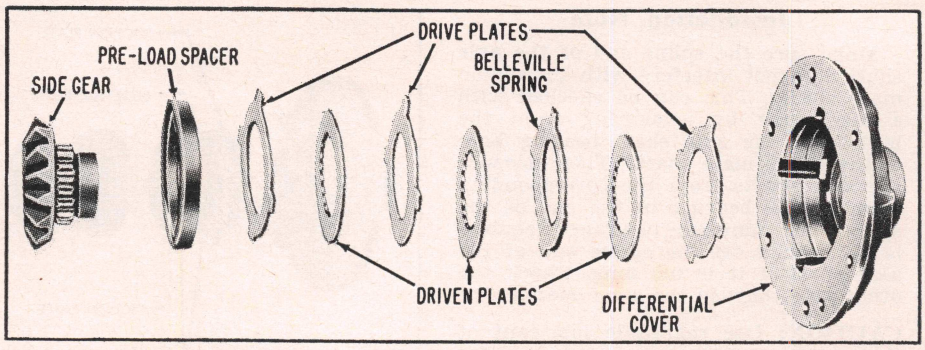

Fig. 11 Exploded view of Corvair locking differential

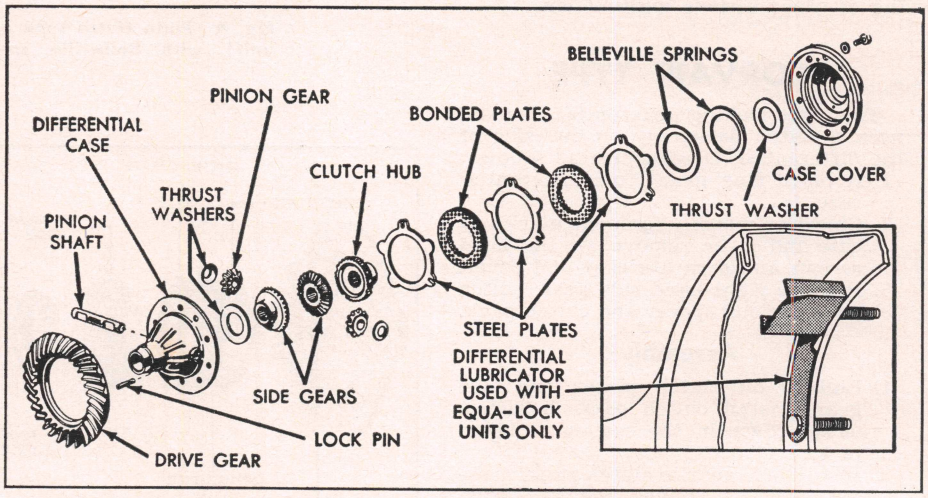

Fig. 13 Ford locking differential

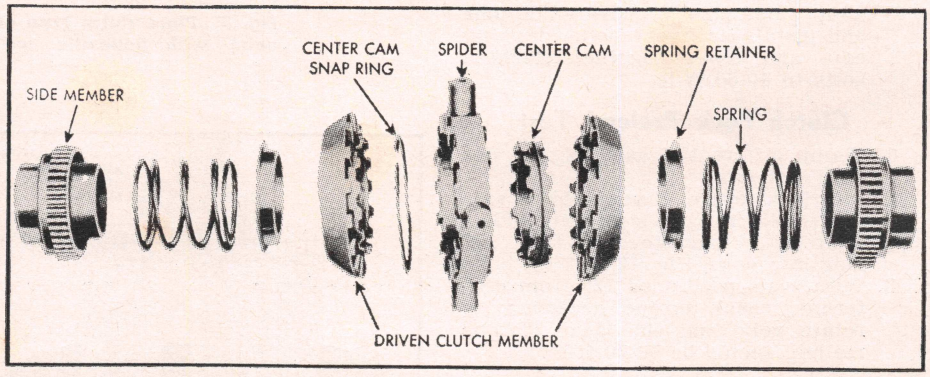

Fig. 14 NoSPIN locking differential

Assembly

1. Lubricate all parts during assembly. Referring to Fig. 13, place side gear and thrust washer in differential case.
2. With soft - faced hammer, drive pinion shaft into case only far enough to retain a pinion thrust washer and pinion gear.
3. Place a second pinion and thrust washer in position, and drive pinion shaft into place. *Carefully line up pinion shaft retainer holes.*
4. Place second pinion and thrust washer in position. Drive pinion shaft into place. Install pinion shaft retainer. *The retainer must not extend beyond the machined surface of the case.*
5. Insert two 2"x$\frac{7}{16}$" bolts through differential flange and thread them 3 or 4 turns into the drive gear as a guide in aligning drive gear bolt holes. Press or tap drive gear into position.
6. Clamp differential case in a vise. Install differential side gear on pinion gears. Place clutch hub on side gear and place thrust washer on hub.
7. Insert two $\frac{3}{16}$x2" dowel pins into differential case. Place a steel plate on differential case so that slots in dog ears straddle dowel pins. *Lubricate all differential parts so that an accurate torque check can be made.*
8. Place a bonded plate on steel plate. Make sure bonded plate inner spline teeth properly engage hub spline. Assemble remaining plates: a steel plate, a bonded plate and lastly a steel plate.
9. Place two Belleville springs on the top steel plate. Both springs are assembled with concave sides down.
10. Place differential case cover on case and start bolts.
11. Tighten bolts evenly and alternately across the diameter of drive gear. As the bolts are tightened the Belleville springs are compressed and the case and cover are pulled together.
12. Torque the bolts to 65-75 lb. ft.
13. Check torque required to rotate one side gear while the other side gear is held. Ignore the torque required to start the side gear turning. The torque required to keep it moving steadily should be between 155 and 195 lb. ft. If not within these limits, check for improper assembly.
14. Install differential in carrier.

CAUTION: Use rear axle lubricant of the type specially recommended for locking differentials. Failure to use proper lubricant will result in chattering or other serious malfunction.

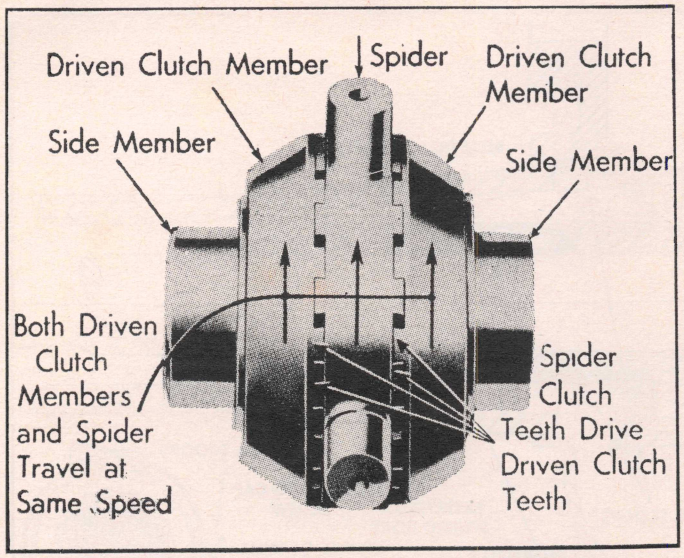

Fig. 15 NoSPIN differential action when moving straight ahead

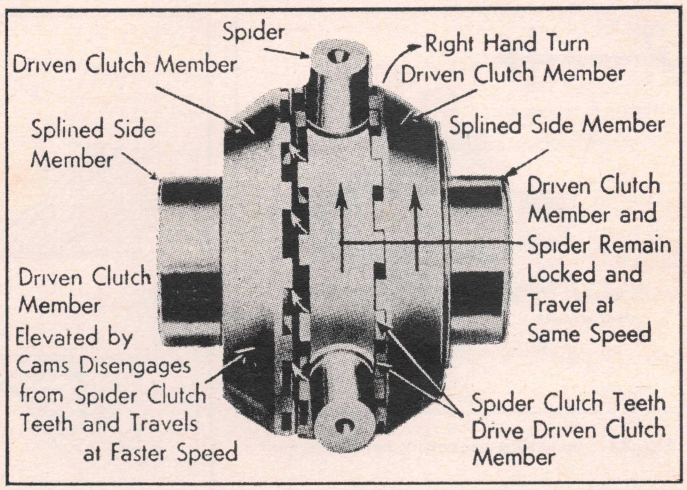

Fig. 16 NoSPIN differential action when making a forward right turn

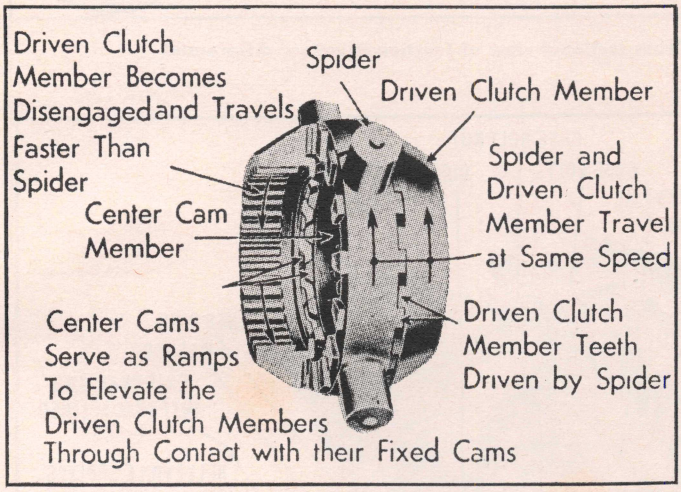

Fig. 17 Cross sectional view of NoSPIN differential when making a forward right turn

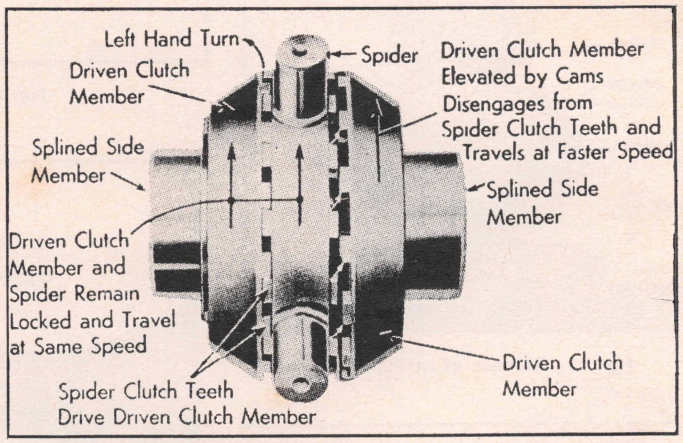

Fig. 18 NoSPIN differential action when making a forward left turn

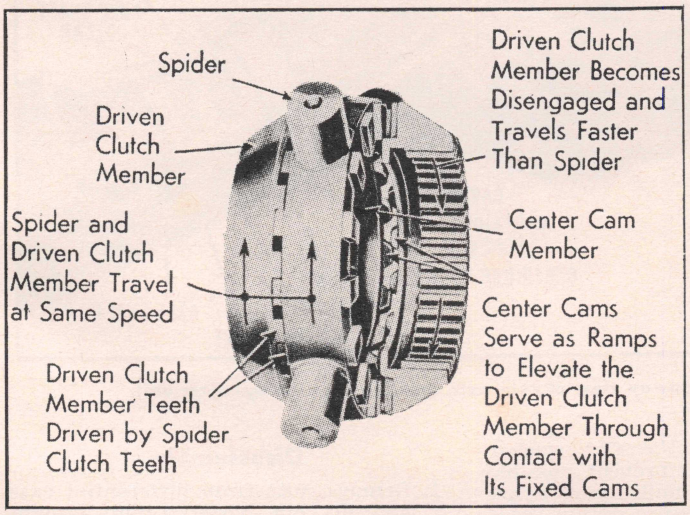

Fig. 19 Cross sectional view of NoSPIN differential when making a forward left turn

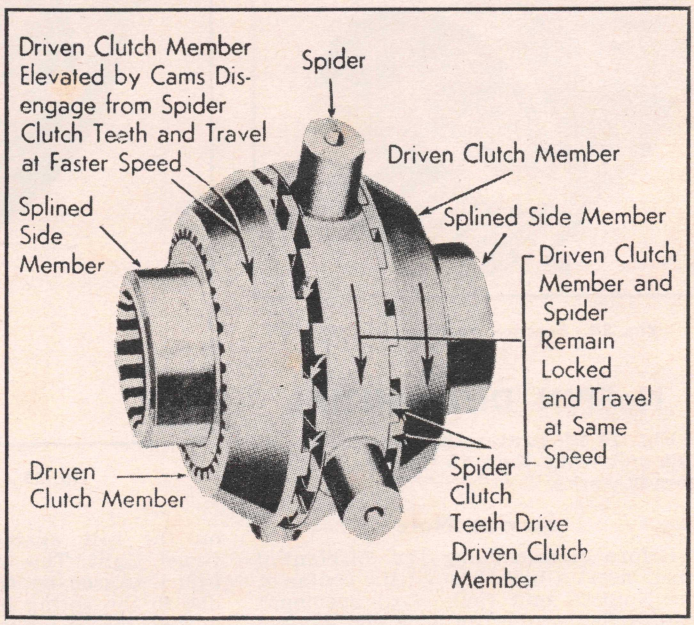

Fig. 20 NoSPIN differential when making a rearward right turn

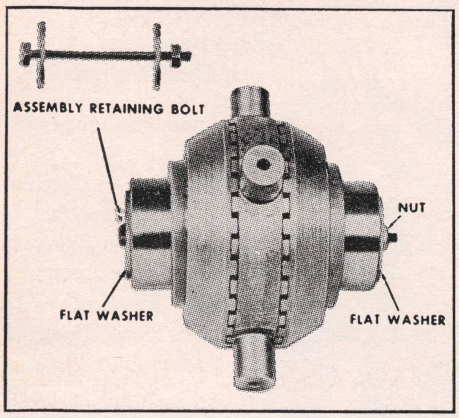

Fig. 21 Inserting assembly retaining bolt

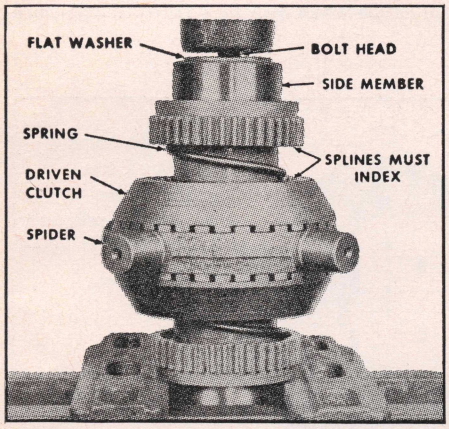

Fig. 22 Release of spring pressure

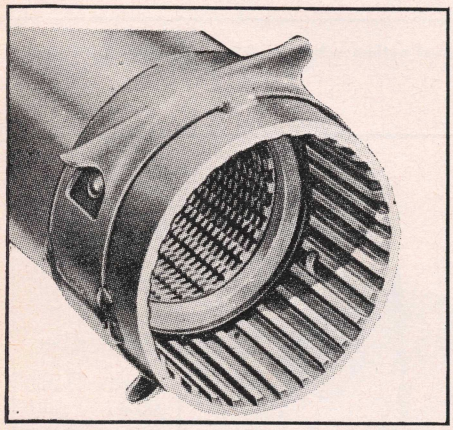

Fig. 24 Traction equalizer cartridge

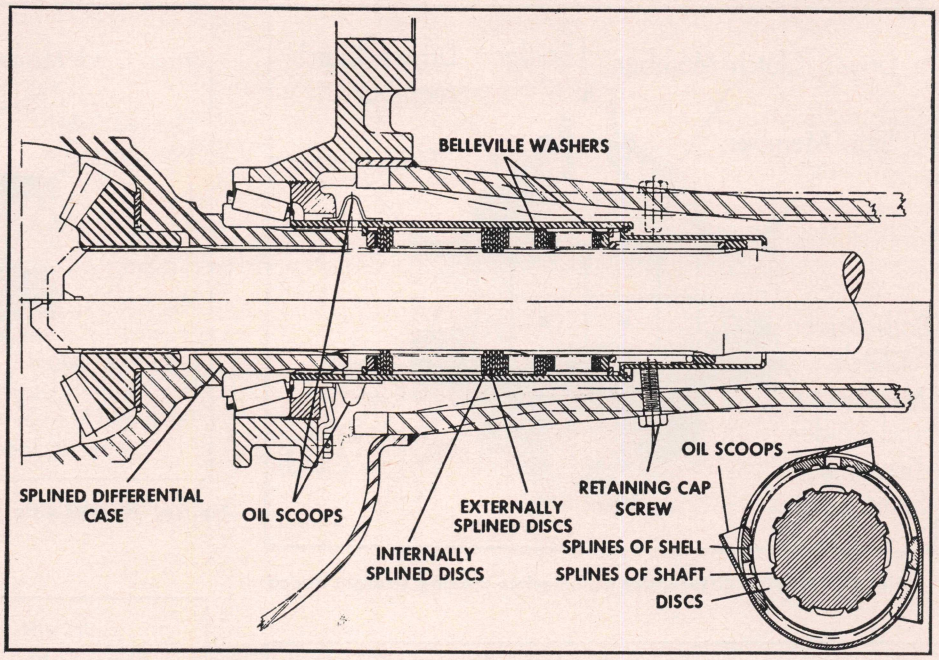

Fig. 23 Cross sectional view of Traction Equalizer differential

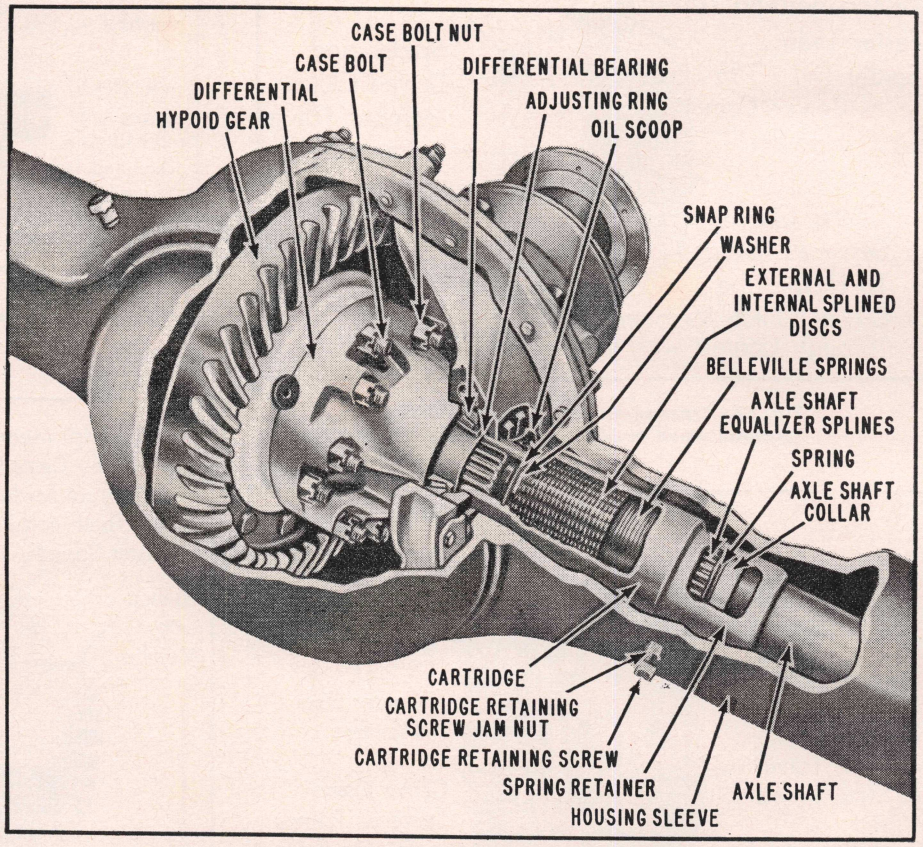

Fig. 25 Cutaway view of rear axle showing Traction Equalizer unit

NoSPIN DIFFERENTIAL

Fig. 14 illustrates the components of this unit while Figs. 15 through 20 show how it works.

Service Note

Before disassembling the differential case, insert a bolt through the center of the NoSPIN unit (axle shaft openings) with a flat washer on each end against the side members, Fig. 21. Thread a nut on the bolt against the flat washer finger tight. This will prevent possible injury caused by the unit flying apart due to the spring pressure within itself during disassembly of the differential case.

Disassembly

1. Remove nuts from differential case and lift out NoSPIN unit. Mount unit in a small press, Fig. 22.
2. Apply enough pressure on head of

bolt to release spring pressure against nut.
3. Remove nut and flat washer by reaching underneath the press.
4. Slowly release press and allow unit to disassemble itself until spring pressure is fully released.
5. Remove unit from press and remove parts. The center cam may be removed from the spider by expanding the snap ring with small screwdrivers or wedges. However, it is not necessary to remove the center cam from the spider even if only one part is damaged since the center cam, snap ring and spider are not serviced separately—only as an assembly.
6. Wash all parts with cleaning solvent. Inspect all mating surfaces and teeth for possible wear or damage. Replace all worn or damaged parts upon reassembly. Lubricate all parts with SAE-30 oil during reassembly.

Reassembly

1. Place side member upright and install spring on same.
2. Place spring retainer on spring with flange end toward side member.
3. Install driven clutch member on spring retainer.
4. Place spider on driven clutch member, indexing teeth of same.
5. Install other driven clutch member, spring retainer, spring and side member on spider.
6. Insert a bolt through the center of the NoSPIN unit with a flat washer against the side member, and mount unit in press, Fig. 22.
7. Compress springs by pressing on head of bolt and index splines of side members with those of driven clutch members. *Keep entire unit aligned in press to prevent it from kicking out while springs are being compressed.*
8. Compress unit until side member splines are completely indexed and flush with driven clutch member.
9. Install flat washer on bolt against side member and thread nut on bolt finger tight so it has the appearance of Fig. 21 when removed from press.

TRACTION EQUALIZER

Fig. 23 is a cross-sectional view of this device. It consists of an internally splined cartridge, Fig. 24. One end mates with the externally splined differential case extension. The shell is loaded with a series of specially treated clutch plates which are splined alternately on the inside and outside diameters to match the internal splines of the cartridge and the external splines on the lengthened axle shaft splines. A series of Belleville spring washers maintain a constant pressure on the clutch plates. Oil scoops automatically pick up the standard axle lubricant.

Operation

During a straight forward drive, the drive torque is transmitted to the wheels in the same manner as with a conventional rear axle. Likewise, straight rearward driving employs the same principles as does the conventional rear axle.

When making a turn, differential action is required in order to permit the outside wheel to travel a greater distance, and faster, than the inside wheel. While differentiation takes place within the differential case, the outer wheel ground traction overpowers the clutch pack friction, thereby causing the clutch plates to rotate. This action takes place constantly in both units mounted on the axle shafts as the vehicle deviates minutely from a straight forward or straight rearward drive.

Differential Removal

1. Remove plug from bottom of axle housing and drain lubricant.
2. Back off and remove Traction Equalizer retaining set screws from housing. Fig. 25. *If only axle shafts are to be removed, do not disturb cartridge set screws.*
3. Remove axle shaft drive nuts and washers.
4. Hold a short drift firmly against center of axle shaft flange *between raised circular lugs* and strike drift a sharp blow to loosen tapered dowels. *Do not strike raised circular lugs with hammer as the lugs are liable to shatter and explode. Do not pry shaft loose. Pry bars, chisels and wedges will damage hub, shaft, flange and oil seals.*
5. Remove dowels and pull out axle shafts.
6. If cartridge remains on differential case splines when axle shaft is removed, insert long hooked rod through housing sleeve. Hook cartridge on inside, pull off differential case splines and leave in housing.
7. Disconnect universal joint at pinion shaft.
8. Disconnect power unit (if equipped).
9. Remove carrier-to-housing stud nuts and washers, leaving the two top nuts partially screwed on studs to prevent carrier from falling.
10. Break carrier loose from housing with a rawhide mallet (remove tapered dowels where used).
11. To remove carrier from a front mounted axle, place a roller jack under carrier, remove the two top nuts and work carrier free. To remove carrier from a top mounted axle, use a chain fall and puller screws in holes provided.

Disassembly

1. Place cartridge assembly under a press with oil scoop end down. A slight press pressure on the retainer assembly in the cartridge will compress the spring and permit removal of the outer snap ring.
2. Remove snap ring. Release press pressure and remove retainer, spring and axle collar.
3. Replace cartridge under press, oil scoop end down. Insert a mandrel with flange end up. Apply a slight pressure to compress Belleville springs and remove retaining snap ring.
4. Release press pressure and remove mandrel. Invert cartridge assembly and place over a post or bar to keep internal parts in order. Hold internal parts down with a sleeve (or equivalent tool) and lift off cartridge shell.
5. Clean and inspect shell and snap ring at oil scoop end.

Inspection & Repair

1. Wire internal parts together in original order and clean in kerosene or diesel fuel oil (not gasoline). Dry immediately after cleaning, using lintless, absorbent paper towels or wiping rags free of abrasive material.
2. Replace dry internal parts on post and remove wire.
3. Remove any accumulation of grit, dirt or gum from housing bowl and sleeve. Clean housing with solvent and dry with compressed air.
4. Inspect housing for cracks, loose studs, nicks or burrs at machined surfaces. Remove nicks or burrs with a stone or file.
5. Make all necessary repairs or parts replacement before installing drive unit and cartridge in housing.

Reassembly

1. Install snap ring at oil scoop end (if removed).
2. Place cartridge shell with oil scoop end down over mandrel.
3. Starting with a thick washer and following with discs and Belleville springs, take internal parts from post, one at a time. Inspect and reoil with axle shaft lubricant, install in shell and over mandrel. *Discs are to be installed alternately starting with an externally splined disc. Belleville springs are to be installed in alternating groups of four starting with concave side down toward last disc which is to be an externally splined disc. If discs bind in cartridge, tap into position with a screwdriver; do not force down as they will be cocked.*
4. Carefully remove mandrel, being careful not to misalign splines, and insert mandrel at top of cartridge with flange end up.
5. Place cartridge under press and apply a slight pressure to compress Belleville springs and install snap ring.
6. Release press pressure and mount a dial indicator so that its stem is against the top of the mandrel flange.
7. Apply a slight pressure and read dial indicator for movement required to compress discs and springs. Compression should be .120″ to .160″. If compression is more than desired, add one or more splined discs, being sure last disc is externally splined. (Discs are about .040″ thick.)
8. Release press pressure and remove mandrel. Install axle shaft collar, spring and retainer with chamfered edge of collar up.
9. Compress spring with slight pressure and install snap ring.
10. Insert axle shafts in housing and carefully mount cartridges on splined ends of shafts through housing bowl opening. Withdraw shafts and cartridges from housing just enough to

allow clearance for carrier installation.
11. Install carrier in housing.
12. Complete assembly of one axle shaft in housing. Engage shaft with splines in side gear. Install taper dowels, lockwashers and nuts. Restrain pinion shaft and rotate hub or wheel until cartridge engages splines on differential case. Install other axle shaft in same manner.
13. Install housing drain plug and insert lubricant.
14. Insert cartridge retaining set screw and jam nut to prevent loss of lubricant.
15. Drive vehicle in a circle to permit second cartridge to engage splines on differential case.
16. Turn each cartridge set screw until it touches spring retainer, then back off screw 1½ to 2 turns and tighten jam nut to 30-35 ft. lbs.

EATON DRIVING AXLES

LUBRICANT CAPACITIES

Lubricant capacities are given as a guide only. The capacities of two similar axles in the same series may vary considerably due to design changes and the vehicle manufacturers' installation. The actual service capacity may be determined by carefully measuring the amount of lubricant necessary to fill the assembly to the correct level and measuring the lubricant again when it is drained. The vehicle should be on a level floor when this inspection is made.

Single Reduction Axles

Model	Oil, Pints
1315	15
1614-5	17
1618-9	20
1715-6	22
1790A-1A	22
1792-3	21
1795-6	24
1862-3	22
1890-1, 2, 3	21
1895-6	24
1910-1	24
2010-1	20

Planetary Double Reduction Axles

Model	Oil, Pints
3800	13
3802	13
6600-1	20
6802-3	20
7800-1	22
8802-3	22
9502-3	24
0502-3	20
2500-1	32
45AR	20

Two Speed Axles

Model	Oil, Pints
1350	13
13600	13
13602	13
13800	13
13802	13
16500-1	20
16600-1	20
16802-3	20
17500-1	22
17700-1	24
17800-1	22
18500-1, 2, 3	22
18700-1	24
18800-1, 2, 3	22
19500-1, 2, 3	24
20500-1, 2, 3	20
22500-1	32

Tandem Drive Axles

Model	Oil, Pints
22MF	12
22M (Power Div.)	9
22MR	12
28MF	17
28M (Power Div.)	9
28MR	17
30DS	22
30DT	22
30DP	22
30RS	20
30RT	20
30RP	20
32MF	28
32M (Power Div.)	3
32MR	31
34DS	24
34DT	24
34DP	24
34DS	22
34RT	22
34RP	22
36MF	24
36M (Power Div.)	3
36MR	24
38DS	24
38DT	24
38DP	24
38RS	22
38RT	22
38RP	22
42DT	24
42DP	24
42RT	22
42RP	22
42MF	20①
42M (Power Div.)	6
42MR	20①

①In rear filler hole; in front filler hole, 2 pints.

TORQUE SETTINGS

Thread Size	Ft Lbs.
¼-20	18- 25
5/16-18	18- 25
⅜-16	35- 45
⅜-24	25- 35
7/16-14	50- 70①
7/16-14	35- 50②
7/16-20	50- 70
½-13	80-100
½-20	80-100
9/16-12	100-125
9/16-18	125-150③
9/16-18	95-125④
9/16-18	150-175⑤
⅝-11	150-175
⅝-18	135-160⑥
⅝-18	150-175⑦
⅝-18	160-185⑧
11/16-11	175-200
¾-10	200-225
13/16-10	225-250
⅞-9	300-350
1-20	225-350
1⅛-18	325-450⑪
1⅛-18	500-700⑩
1⅛-18	175-200⑨
1¼-12	400-600⑬
1¼-12	175-200⑫
1¼-18	400-600
1½-18	175-200⑮
1½-18	500-700⑭
1¾-12	600-800⑰
1¾-12	175-200⑯
2-12	700-900

①—Differential case.
②—Inspection cover to axle housing. Also oil collector drum to differential case on D Series forward axles.
③—Gear support case on two speed and planetary double reduction axles.
④—Ring gear to case on M Series axles.
⑤—Bolt locations other than specified in notes ③ and ④.
⑥—Ring gear to differential case on single reduction axles.
⑦—Herringbone gear to differential case on M Series forward axles, and gear case support on two-speed and planetary double reduction axles.
⑧—Differential case to axle housing on two-speed, planetary double reduction, D Series forward and rear axles, and M Series forward axles.
⑨—Drive pinion nut on two speed and planetary double reduction axles.
⑩—Input and output shaft nuts on M Series axles.
⑪—Bolt locations other than specified in notes ⑨ and ⑩.
⑫—Output shaft nut on D Series forward axles.
⑬—Bolt locations other than specified in note ⑫.
⑭—Drive pinion nut on D Series forward axle and M Series rearward axle.
⑮—Bolt locations other than specified in note ⑭.
⑯—Input shaft nut on M Series forward axle.
⑰—Bolt locations other than specified in note ⑯.

INDEX

Model Index and Lube Capacities 176
Torque Settings 176
Axle Adjustments (All Models) 177
Single Reduction Axle Service 181
Two-Speed Axle Service 183
Double Reduction Planetary Axle Service . 186
"D" Series Tandem Drive Axle Service ... 187
"M" Series Tandem Drive Axle Service ... 194

Axle Adjustments

PROCEDURE

Measuring ring gear to drive pinion backlash and checking tooth contact pattern before disassembly, plus "punch marking" components for related position are recommended procedures for easier adjustment of axle after reassembly. If major axle parts are replaced, these identifying marks and reference measurements may not necessarily provide correct adjustment. However, usual return of parts to the identifying marks will serve as a reference to position parts as near as possible to correct adjustment.

The following is an outline of axle adjustment procedure and includes information on when adjustment should be performed and references to detailed instructions:

1. *Power Divider Input and Output Shaft Bearing Clearances.* These adjustments are made during reassembly of power divider. Refer to individual axle instructions.
2. *Drive Pinion Bearing Preload.* This adjustment is made before installing drive pinion (see below).
3. *Drive Pinion Position Adjustment.* Initial or preliminary adjustment is made during reassembly (see below).
4. *Differential Bearing Preload.* This adjustment is made in combination with ring gear and drive pinion adjustments (see below).
5. *Ring Gear and Drive Pinion Backlash.* Adjustments are given below.
6. *Ring Gear Tooth Contact.* Check ring gear tooth contact when adjusting ring gear and drive pinion (see below).
7. *Ring Gear Thrust Block Clearance.* This adjustment is made after drive pinion adjustments are completed and before differential carrier is installed in axle housing. Refer to individual axle instructions.
8. *Wheel Bearing Adjustments.* Procedure is given below.

		Dimensions for Drive Pinion Bearing Preload Adjustment		Dimensions for Drive Pinion Position Adjustment	
	AXLE MODELS	PINION BEARING SPACER	PINION BEARING CAGE RADIUS	PINION BEARING CAGE SHIM PACK	PINION DEPTH GAUGE SETTING
SINGLE REDUCTION AXLES	1315	0.528	2 1/8	0.046	3.28125
	1614	0.637	2 1/2	0.043	3.5625
	1618	0.528	2 1/8	0.030	4.125
	1790A, 1862	0.639	2 1/2	0.030 + 0.125 Spacer	4.2187
	1792, 1892	0.190	2 13/16	0.040 + 0.125 Spacer	4.0625
	1910, 2010	0.185	3 1/8	0.040	4.600
2-SPEED AXLES	1350, 13800	0.530	2 1/8	0.040	3.6244
	13600	0.330	2 23/32	0.045	4.28125
	13602	0.330	2 23/32	0.165	4.28125
	13802	0.527	2 1/8	0.040 + 0.250 Spacer *	3.6244
	16500	0.530	2 1/8	0.040	4.125
	16600	0.331	3	0.056	4.8125
	16802	0.528	2 1/8	0.043	4.125
	17500, 18500	For replacement, use 17800 or 18802 Gear Set plus 0.250 in. Bearing Cage Spacer			4.4062
	17800, 18802	0.638	2 1/2	0.037	4.4062
	19502, 20502	0.188	2 13/16	0.040	4.7812
	22501	0.185	3 1/8	0.040	5.4375
PLANETARY DOUBLE REDUCTION AXLES	45AR, 0502, 9502	0.188	2 13/16	0.040	4.7812
	2501	0.185	3 1/8	0.040	5.4375
	3800	0.530	2 1/8	0.040	3.6244
	3802	0.527	2 1/8	0.040 + 0.250 Spacer †	3.6244
	6600	0.331	3	0.056	4.8125
	6802	0.528	2 1/8	0.043	4.125
	7800, 8802	0.638	2 1/2	0.037	4.4062
TANDEM DRIVE AXLES	22MF	0.530	2 1/8	0.050	3.253
	22MR	0.530	2 1/8	0.040	3.253
	28MF	0.530	2 1/8	0.050	3.4725
	28MR	0.640	2 7/16	0.040	3.4725
	30DS, 30DT, 30DP	0.638	2 1/2	0.040	4.125
	30RS	0.528	2 1/8	0.030	4.125
	30RT, 30RP	0.528	2 1/8	0.043	4.125
	32MF	0.637	2 15/32	0.050	4.2187
	32MR	0.639	2 1/2	0.030	4.2187
	34DS, 34DT, 34DP	0.642	2 13/16	0.056	4.4062
	34RS	0.639	2 1/2	0.030 + 0.125 Spacer	4.2187
	34RT, 34RP	0.638	2 1/2	0.037	4.4062
	36MF	0.638	2 15/32	0.060	4.875
	36MR	0.177	3 1/8	0.040	4.875
	38DS, 38DT, 38DP	0.642	2 13/16	0.056	4.4062
	38RS	0.639	2 1/2	0.030 + 0.125 Spacer	4.2187
	38RP, 38RT	0.638	2 1/2	0.037	4.4062
	42DT, 42DP	0.642	2 13/16	0.056	4.4062
	42RT, 42RP	0.638	2 1/2	0.037	4.4062
	42MF	0.638	2 15/32	0.060	2.8125
	42MR	0.175	3 3/8	0.060	2.8125

* spacer not used on all model 13802 axles. † spacer not used on all model 3802 axles.

Fig. 1 Eaton axle drive pinion adjustment specifications

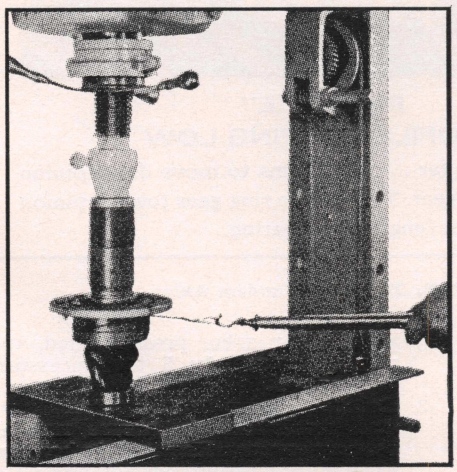

Fig. 4 Checking drive pinion bearing preload with spring scale (pinion in press)

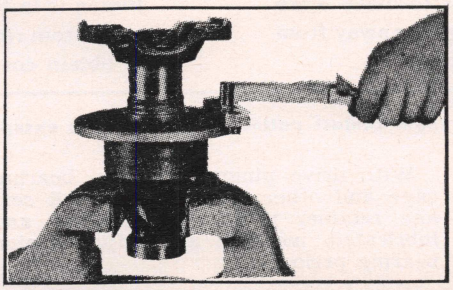

Fig. 2 Checking drive pinion bearing preload with torque wrench (pinion in vise)

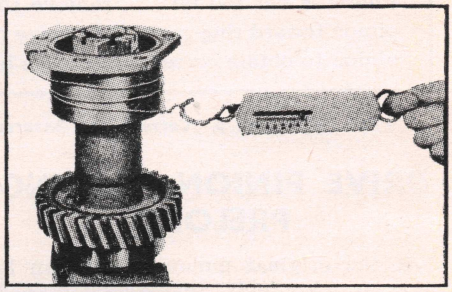

Fig. 3 Checking drive pinion bearing preload with spring scale for Tandem Drive Axles (pinion in vise)

The ring gear tooth contact patterns illustrated are approximate shapes. Actual contact may vary, however the same general shape should be obtained. When adjusting gear sets that have been in service, tooth contact may vary because of wear. To obtain best results, strive to obtain a pattern coinciding with original patterns.

Pattern "A"
CORRECT TOOTH CONTACT

Correct adjustment is obtained when pattern of tooth bearing *(both lengthwise and profile)* appear as shown.

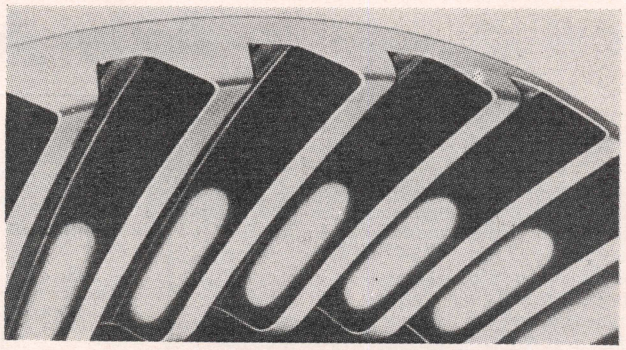

Pattern "A"

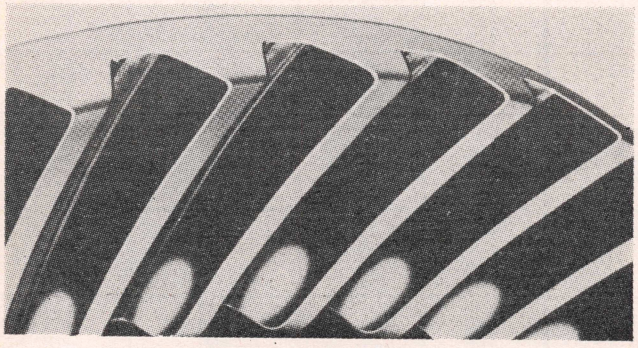

Pattern "B"
CONCENTRATED BEARING AT TOE

Not enough backlash . . . move ring gear *away* from drive pinion to increase lengthwise bearing. This may change the profile bearing to some extent and an adjustment of the pinion may be required.

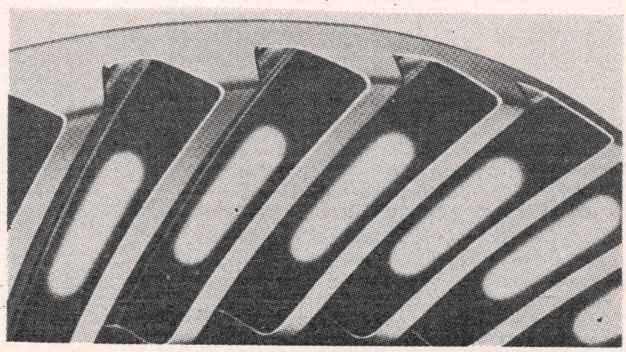

Pattern "C"
CONCENTRATED BEARING AT HEEL

Too much backlash . . . move ring gear *toward* drive pinion to obtain correct lengthwise bearing. This may change the profile bearing to some extent and an adjustment of the pinion may be required.

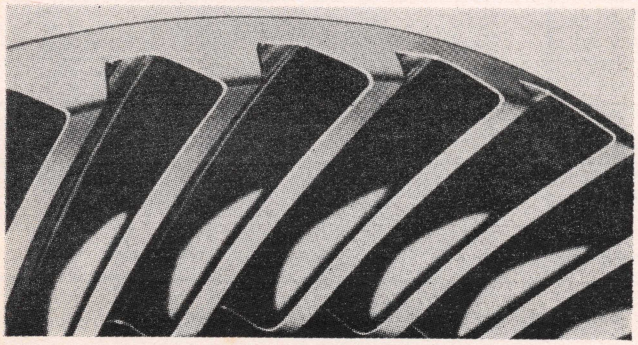

Pattern "D"
PROFILE BEARING HIGH

Pinion is out too far . . . remove shims to move drive pinion toward ring gear. Then move ring gear away from pinion to obtain correct lengthwise bearing.

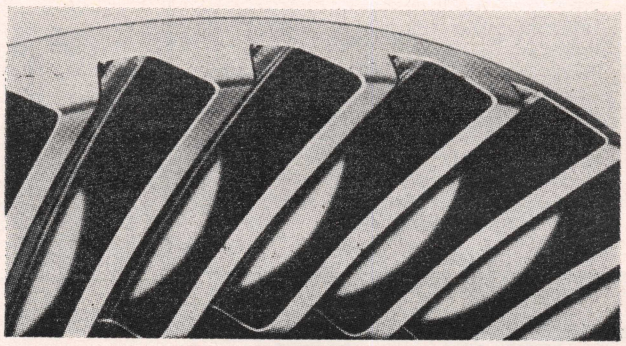

Pattern "E"
PROFILE BEARING LOW

Pinion is in too far . . . add shims to move drive pinion away from ring gear. Then move ring gear toward pinion to obtain correct lengthwise bearing.

Fig. 5 Correct and incorrect tooth contact patterns for all models except 22M, 28M, 36M Tandem Axles

DRIVE PINION BEARING PRELOAD

If the original pinion spacer can be used in reassembly, this should provide a close to correct adjustment of pinion bearing preload. If original spacer cannot be used start with spacer thickness recommended in Fig. 1.

With drive pinion, bearings, bearing cage and other related parts (oil seal and retainer removed) assembled and lubricated, measure and adjust pinion bearing preload.

Torque Wrench Method

1. Mount an adapter on pinion bearing cage, Fig. 2.
2. Hold drive pinion in a vise or arbor press. If an arbor press is used, apply approximately 5 tons pressure to bearings.
3. Rotate bearing cage by hand several revolutions to assure normal bearing contact. Then rotate bearing cage with a torque wrench and note torque reading as cage is rotated.
4. Correct bearing preload is indicated by a torque of 15 to 35 inch lbs. If

The ring gear tooth contact patterns illustrated are approximate shapes. Actual contact may vary, however the same general shape should be obtained. When adjusting gear sets that have been in service, tooth contact may vary because of wear. To obtain best results, strive to obtain a pattern coinciding with original patterns.

Pattern "A"
CORRECT TOOTH CONTACT

Correct adjustment is obtained when pattern of tooth bearing *(both lengthwise and profile)* appear as shown.

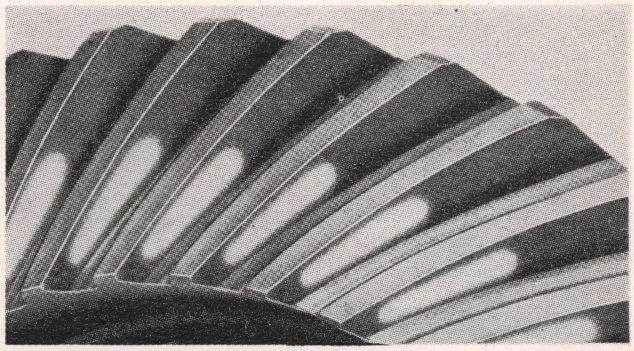

Pattern "A"

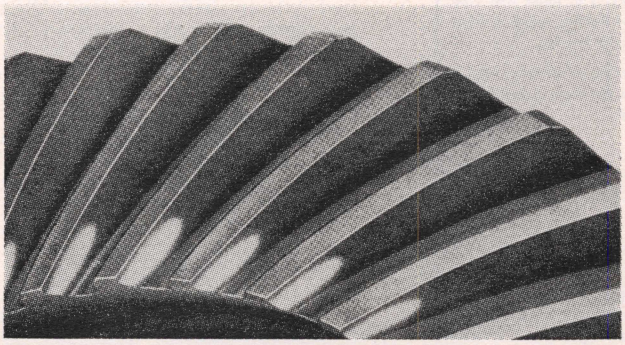

Pattern "B"
CONCENTRATED BEARING AT TOE

Not enough backlash . . . move ring gear *away* from drive pinion to increase lengthwise bearing. This may change the profile bearing to some extent and an adjustment of the pinion may be required.

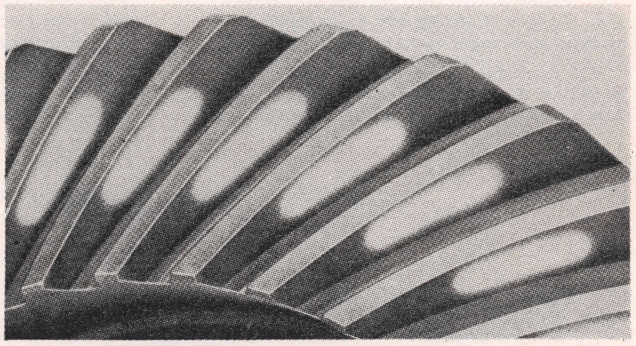

Pattern "C"
CONCENTRATED BEARING AT HEEL

Too much backlash . . . move ring gear *toward* drive pinion to obtain correct lengthwise bearing. This may change the profile bearing to some extent and an adjustment of the pinion may be required.

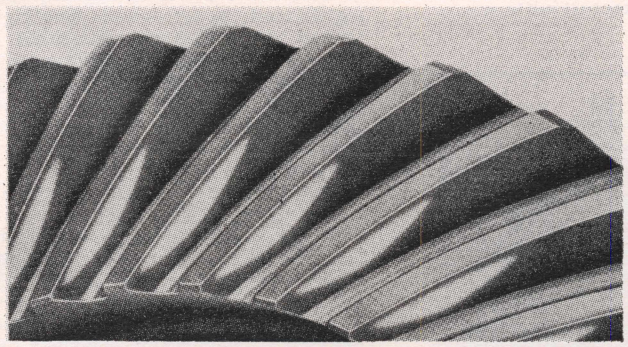

Pattern "D"
PROFILE BEARING HIGH

Pinion is out too far . . . remove shims to move drive pinion toward ring gear. Then move ring gear away from pinion to obtain correct lengthwise bearing.

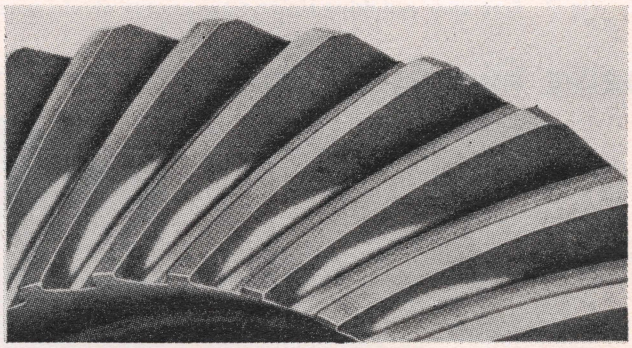

Pattern "E"
PROFILE BEARING LOW

Pinion is in too far . . . add shims to move drive pinion away from ring gear. Then move ring gear toward pinion to obtain correct lengthwise bearing.

Fig. 6 Correct and incorrect tooth contact pattern for Tandem Axle Models 22MF, 22MR, 28MF, 28MR, 36MF, 36MR

incorrect, adjust by changing pinion bearing spacer. Use a thicker spacer to decrease preload or a thinner one to increase preload. *Do not use shim stock to increase thickness of spacer; always use correct size spacer.*

Spring Scale Method

1. Wrap a soft wire around bearing cage, Figs. 3 and 4.
2. Hold drive pinion in a vise or arbor press. If a press is used, apply approximately 5 tons pressure to bearings.
3. Pull scale on a line tangent to the cage outside diameter as shown with the scale attached to the wire and note scale reading.
4. To calculate torque from scale reading, measure cage radius (see Fig. 1). Then multiply radius times scale reading. Example: With cage radius 2½" and scale pull 12 lbs., torque would be 12 x 2½ or 30 in. lbs.
5. Correct bearing preload is indicated by a torque of 15 to 35 inch lbs. If incorrect, use a thicker spacer to decrease preload and a thinner one to increase preload. *Do not use shim stock to increase thickness of spacer; always use correct size spacer.*

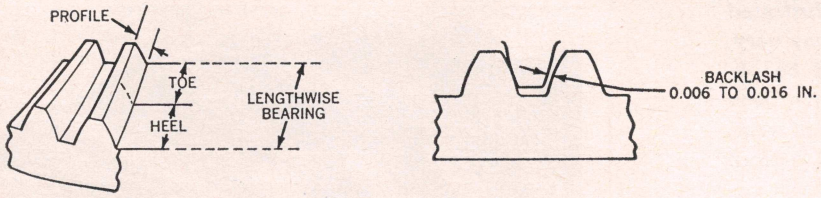

Ring Gear Tooth Nomenclature

check tooth contact pattern

Tooth contact pattern consists of the lengthwise bearing and profile bearing. The lengthwise bearing is the bearing along the tooth of the ring gear. The profile bearing is the bearing up and down the tooth (See fig. 206). In determining correct ring gear tooth contact, these two types of bearings must be considered separately to obtain proper results in combination.

With differential bearings adjusted correctly, paint at least ten ring gear teeth with red lead or prussian blue. Turn ring gear by hand a few revolutions in both directions to obtain impressions (or patterns) of tooth contact. Compare contact patterns with those shown in figure 208 or 209. If tooth contact patterns are not correct, move ring gear and/or drive pinion as necessary to adjust for correct pattern. Keep in mind that ring gear movement affects lengthwise bearing and that drive pinion movement affects the profile bearing.

Adjust to obtain correct tooth contact on drive side of teeth. Under this condition, the coast side tooth contact is usually satisfactory.

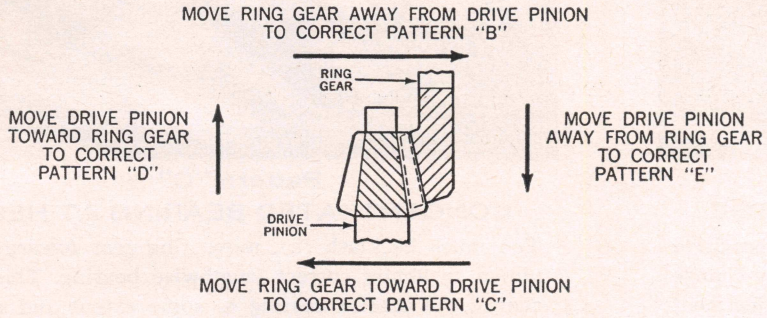

Fig. 7 Ring gear and drive pinion movement to obtain correct tooth contact pattern

DRIVE PINION POSITION

Drive pinion position in relation to ring gear is adjusted by adding or removing shims between pinion bearing cage and differential carrier or power divider case.

To assist in adjustment of ring gear and pinion, pinion should be positioned as near as possible to the correct position during reassembly. This can be accomplished as follows:

If the original ring gear and pinion are used in reassembly, use same size and quantity of shims removed during disassembly. If a new ring gear and pinion are used in reassembly, use shim pack recommended in Fig. 1.

The drive pinion position may also be set with a depth gauge. Fig. 1 also shows the basic dimensions used for gauge setting.

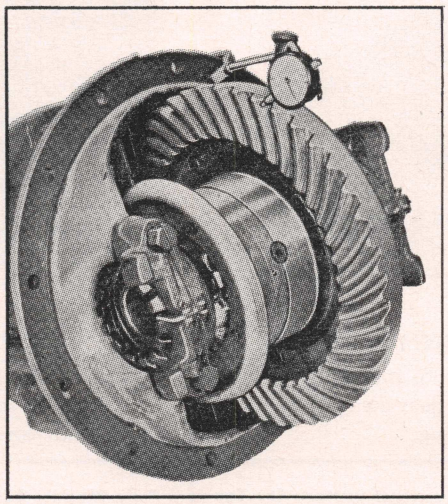

Fig. 8 Measuring ring gear backlash with dial indicator

RING GEAR & DRIVE PINION

Except Model 42M Tandem

1. With differential bearings lubricated and bearing cap screws tightened *finger tight,* adjust ring gear and pinion as follows, referring to Figs. 5 and 6 for tooth contact pattern identification. Also refer to Fig. 7 for tooth nomenclature. *Note: Adjustment of bearing adjusters to change ring gear position is affected by the relative mounting positions of the ring gear and drive pinion. The following instructions are for axles with ring gear on left-hand side of drive pinion. Left and right-hand instructions in parentheses (left-hand) (right-hand) are for axles with ring gear on right-hand side of drive pinion.*
2. Tighten differential bearing adjusters to correctly seat bearing cups.
3. Loosen right-hand (or left-hand) bearing adjuster until it is very loose. Tighten left-hand (or right-hand) bearing adjuster until backlash is removed between ring gear and drive pinion. Tightening left-hand (or right-hand) adjuster moves ring gear toward drive pinion.
4. Tighten right-hand (or left-hand) bearing adjuster until snug, then continue to tighten adjuster two additional notches. This will normally position ring gear within the specified .006 to .016″ backlash. This adjustment will also preload differential bearings. Tightening right-hand (or left-hand) adjuster moves ring gear away from drive pinion.
5. Tighten differential bearing capscrews to correct torque, then measure ring gear movement with a dial indicator, Fig. 8, to determine specific backlash.
6. Paint ring gear teeth and check tooth contact pattern. Compare pattern with those illustrated in Figs. 5 and 6. If contact pattern similar to "A" is obtained, adjustment is correct.
7. If Pattern "B" is indicated, loosen left-hand (or right-hand) bearing adjuster and tighten right-hand (or left-hand) bearing adjuster equal amounts. Recheck tooth contact pattern. If pattern is not corrected, continue to move bearing adjusters (the same number of notches) until proper lengthwise pattern is obtained.
8. If Pattern "C" is indicated, loosen right-hand (or left-hand) bearing adjuster and tighten left-hand (or right-hand) adjuster equal amounts. Recheck tooth pattern. If pattern is not corrected, continue to turn bearing adjuster equal amounts until proper lengthwise bearing pattern is obtained.
9. If Patterns "D" or "E" is indicated, adjustment of drive pinion position is necessary. Add or remove pinion bearing cage shims to move drive pinion as pattern indicates. When drive pinion position is changed, the adjustment may affect lengthwise bearing. If necessary, readjust backlash for proper lengthwise bearing. Recheck tooth contact pattern.
10. When correct tooth pattern "A" is obtained, install adjuster locks and cotter pins. Lockwire differential bearing capscrews.

Model 42M Tandem Axle

For easier adjustment, it is recommended that the differential assembly and power divider assembly be removed from the differential carrier. In the following instructions, it is assumed that only the countershaft assembly and bearings are installed in differential carrier. Refer to Fig. 5 for tooth contact pattern and Fig. 7 for tooth nomenclature.

1. To adjust countershaft bearings, turn left-hand bearing adjuster until two or three threads are engaged. Tighten right-hand bearing cage

until end play is removed from countershaft bearings.

2. To preload countershaft bearings, continue to tighten right-hand bearing cage until resistance is felt when rotating countershaft. *This preload adjustment can be maintained during ring gear adjustment by turning bearing adjuster and cage equal amounts. Preload should be 10 to 22 inch lbs.*
3. Install power divider assembly.
4. To adjust ring gear backlash, loosen right-hand bearing cage and tighten left-hand bearing adjuster (the same number of turns) until .006 to .016″ backlash is obtained. Measure backlash with dial indicator, Fig. 8.
5. Paint ring gear teeth and check tooth contact pattern. Compare pattern with those shown in Fig. 5.
6. If Pattern "B" is indicated, loosen left-hand bearing adjuster and tighten right-hand bearing cage equal amounts. Recheck tooth pattern. If pattern is not corrected, continue to move bearing cage and adjuster (the same number of notches) until proper lengthwise bearing pattern is obtained.
7. If Pattern "C" is indicated, loosen right-hand bearing cage and tighten left-hand bearing adjuster equal amounts. Recheck tooth pattern. If pattern is not corrected, continue to turn bearing cage and adjuster equal amounts until proper lengthwise bearing pattern is obtained.
8. If Pattern "D" or "E" is indicated, adjustment of drive pinion is necessary. Add or remove pinion bearing cage shims to move drive pinion as pattern indicates. When drive pinion position is changed, the adjustment may affect lengthwise bearing. If necessary, readjust backlash for proper lengthwise bearing. Recheck tooth contact pattern.
9. When Pattern "A" is obtained, install countershaft bearing covers, gaskets and capscrews. Install differential assembly.

WHEEL BEARING ADJUSTMENT

Wheel bearings should be adjusted to provide .001 to .010″ end play.

1. Remove outer nut and lockwasher.
2. While turning wheel in both directions, tighten inner nut until a slight bind on nut is present.
3. Back off inner nut 1/3 turn to permit wheel to rotate freely.
4. Install lockwasher and outer nut, and lock both nuts in this position.

Eaton Single Reduction Axles

DISASSEMBLE

Differential Carrier, Fig. 9

1. Drain lubricant.
2. Disconnect propeller shaft and remove axle shafts.
3. Unfasten and remove differential carrier from axle housing and discard gasket.
4. Unscrew pipe plug, then remove spring and oil distributor (if used).
5. Remove ring gear thrust block from end of adjusting screw after removing locknut and screw (if used).
6. Punch mark differential bearing caps and carrier for correct location on reassembly. Also punch mark differential bearing adjusters for correct location of adjuster locks.
7. Remove differential bearing caps and adjusters. Tilt ring gear away from pinion and lift out differential assembly.
8. Remove pinion bearing cage-to-carrier capscrews. Drive pinion assembly out of carrier, being careful not to allow assembly to fall on flange. *Note size and quantity of shims under bearing cage flange for easier adjustment during reassembly.*

Drive Pinion

1. Hold companion flange in vise, then remove cotter pin, nut and flat washer.
2. Drive pinion out of flange.
3. Remove pinion bearings cage assembly. Remove oil seal retainer, flange flat washer (if used) and outer bearing cone from cage. Discard bearing cage cork seal.
4. If replacement is necessary, remove bearing cups from cage, using suitable puller. Remove oil seal and felt seal from seal retainer.
5. Remove bearing spacer washer (if used) and spacer from pinion.
6. Remove inner bearing cone and pilot bearing from pinion, using suitable pullers.

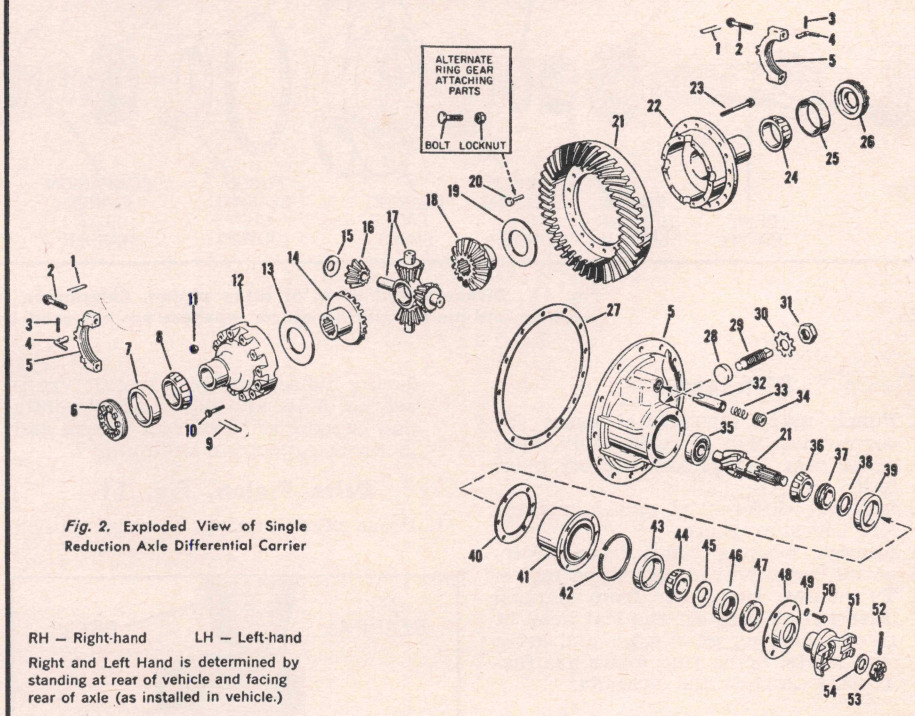

Fig. 2. Exploded View of Single Reduction Axle Differential Carrier

RH — Right-hand LH — Left-hand

Right and Left Hand is determined by standing at rear of vehicle and facing rear of axle (as installed in vehicle.)

1. Lockwire
2. Cap screw
3. Cotter pin
4. Adjuster lock
5. Differential carrier and bearing caps (matched parts)
6. Differential bearing adjuster (RH)
7. Differential bearing cup (RH)
8. Differential bearing cone (RH)
9. Lockwire
10. Cap screw
11. Nut
12. Differential case (plain half)
13. Side gear thrust washer (RH)
14. Side gear (RH)
15. Side pinion thrust washer
16. Side pinion
17. Spider
18. Side gear (LH)
19. Side gear thrust washer (LH)
20. Rivet
21. Ring gear and drive pinion (matched set)
22. Differential case (flanged half)
23. Bolt
24. Differential bearing cone (LH)
25. Differential bearing cup (LH)
26. Differential bearing adjuster (LH)
27. Carrier gasket
28. Ring gear thrust block
29. Adjusting screw
30. Lock
31. Locknut
32. Oil distributor
33. Spring
34. Pipe plug
35. Pinion pilot bearing
36. Pinion bearing cone (inner)
37. Pinion bearing spacer
38. Pinion bearing spacer washer
39. Pinion bearing cup (inner)
40. Pinion bearing cage shims
41. Pinion bearing cage
42. Cork seal
43. Pinion bearing cup (outer)
44. Pinion bearing cone (outer)
45. Companion flange flat washer
46. Oil seal
47. Felt seal
48. Oil seal retainer
49. Lockwasher
50. Cap screw
51. Companion flange
52. Cotter pin
53. Pinion nut
54. Flat washer

Fig. 9 Disassembled view of Eaton Single Reduction Axle Differential Carrier

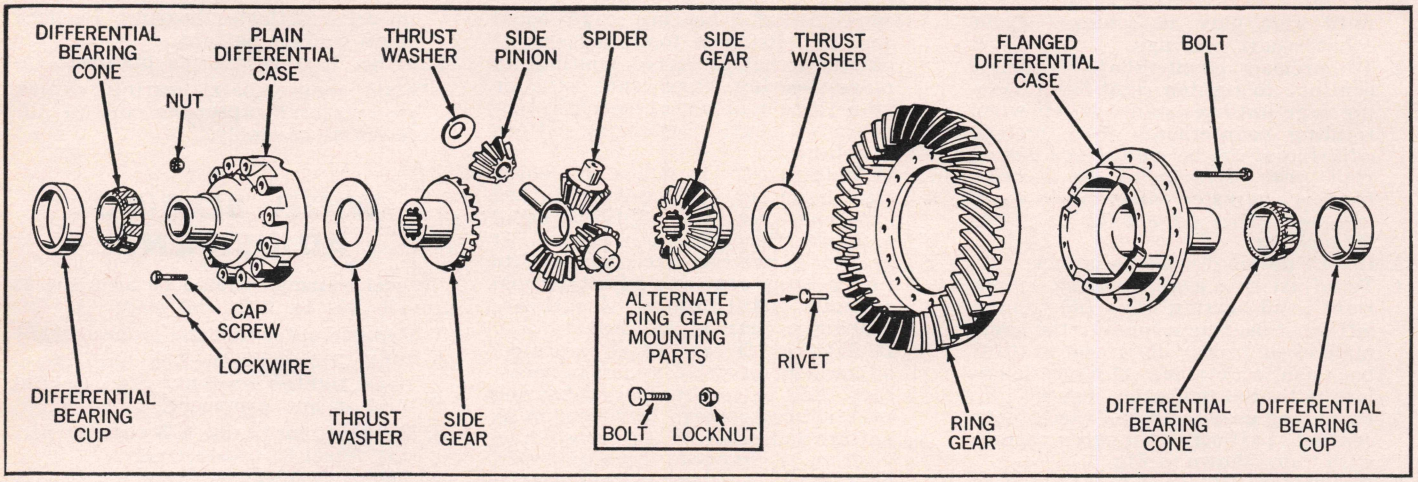

Fig. 10 Disassembled view of differential

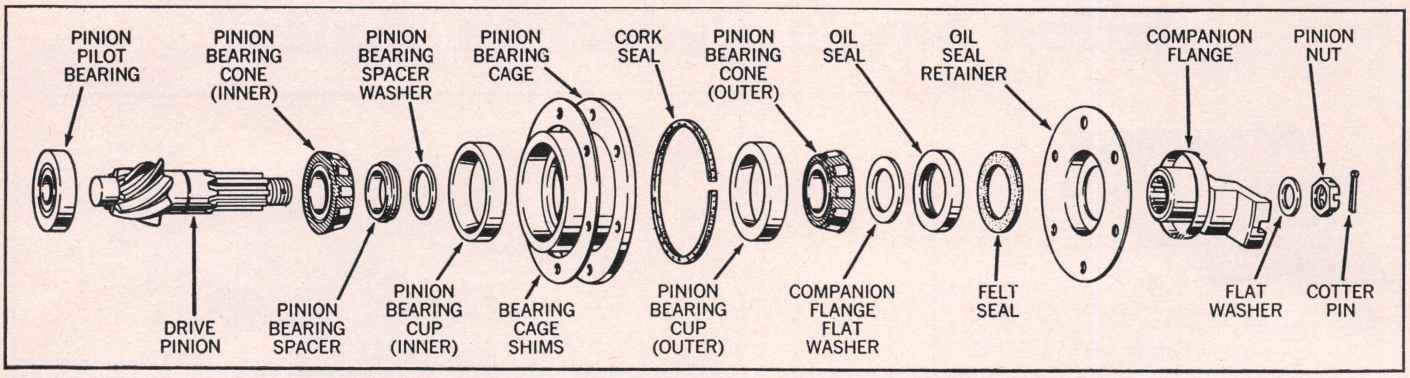

Fig. 11 Disassembled view of drive pinion. Companion flange flat washers and pinion bearing spacer washers are not used on all axles

Differential

1. Punch mark differential cases for correct location in reassembly. Separate case halves and lift off plain half.
2. Lift out differential spider, pinions and thrust washers.
3. Remove bearing cones from differential cases with a split-type puller.
4. To remove ring gear from flanged differential, drill off the flat head of rivets (on ring gear side) and drive out rivets. Some ring gears are fastened with bolts and locknuts.

REASSEMBLE

Differential, Fig. 10

1. Rivet (cold) ring gear to flanged differential case, using a press. Compress rivets from 44 to 48 tons on Model 1315 and from 47-50 on all other models. If bolts and locknuts are used, tighten to correct torque. Lubricate internal parts of differential during reassembly.
2. Press bearing cones on differential cases.
3. Assemble spider, pinions and thrust washers in flanged differential case. Then tap plain differential case into place, aligning punch marks made during disassembly. Install capscrews, bolts and nuts. Tighten nuts and capscrews to correct torque and lockwire capscrews and nuts.

Drive Pinion, Fig. 11

1. Press pilot bearing on drive pinion and stake in four places as shown in Fig. 12.

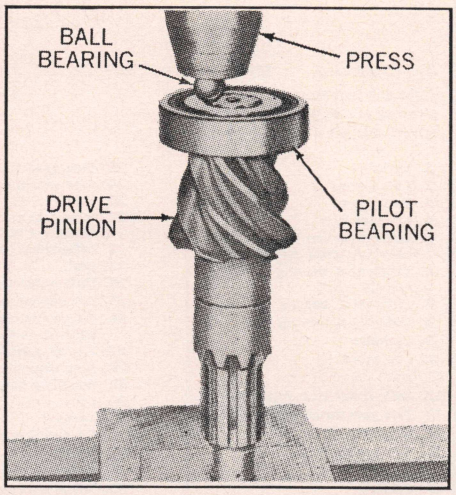

Fig. 12 Staking drive pinion pilot bearing (stake in four places)

2. Press inner bearing cone on pinion. Place spacer and washer (if used) on pinion.
3. If removed, press bearing cups into pinion bearing cage. Install new felt seal and oil seal in oil seal retainer.
4. Lubricate drive pinion bearings, then place pinion bearing cage and outer bearing cone on drive pinion. *Do not install oil seal retainer until pinion bearing adjustment is completed.*
5. Temporarily assemble companion flange to pinion as follows: Place companion flange flat washer (if used) on drive pinion. Press flange on pinion. Install and tighten pinion nut to correct torque. Rotate pinion bearing cage while tightening nut. Check pinion bearing preload adjustment as outlined previously.
6. With pinion bearings correctly adjusted, remove companion flange. Install new cork seal in groove of pinion bearing cage. Install oil seal retainer, then reinstall companion flange, flat washer and pinion nut. Tighten nut to correct torque and install cotter pin.

Differential Carrier

1. Install same quantity and size shims

that were removed in disassembly on pinion bearing cage, then install drive pinion assembly in carrier. Install and tighten capscrews to correct torque.

2. Thread thrust block adjusting screw (if used) far enough into carrier to mount thrust block. Lubricate and install thrust block on end of adjusting screw.
3. Place differential assembly in carrier and install differential bearing cups, adjusters and caps. Install and finger tighten differential bearing capscrews. Tighten adjusters to correctly seat differential bearings. Adjust ring gear and drive pinion as outlined previously.
4. With ring gear and pinion correctly adjusted, and differential bearing capscrews tightened to correct torque, install cotter pins to secure adjuster locks. Lock wire capscrews.
5. Install oil distributor (if used), spring and pipe plug.
6. Adjust thrust block clearance as follows: Tighten adjusting screw to position thrust block against ring gear. Loosen adjusting screw 1/8-1/4 turn to obtain .010 to .015" clearance between thrust block and ring gear. Tighten locknut. Bend ear of lock against nut to secure adjustment.

Install Carrier in Housing

1. Using a new gasket, install carrier in axle housing. Install capscrews and tighten to correct torque.
2. Install axle shaft and connect propeller shaft. Fill housing with correct lubricant.

Eaton Two Speed Axles

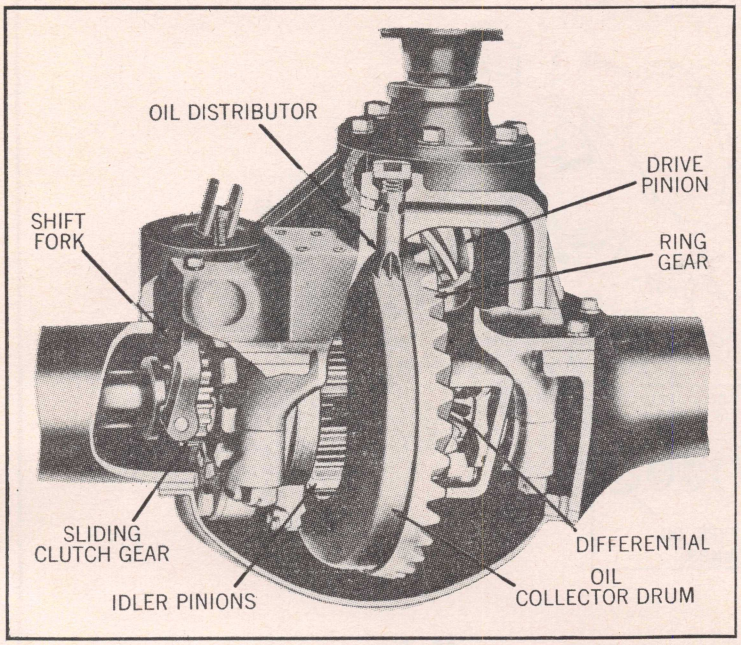

Fig. 13 Cutaway view of Eaton Two Speed Axle assembly

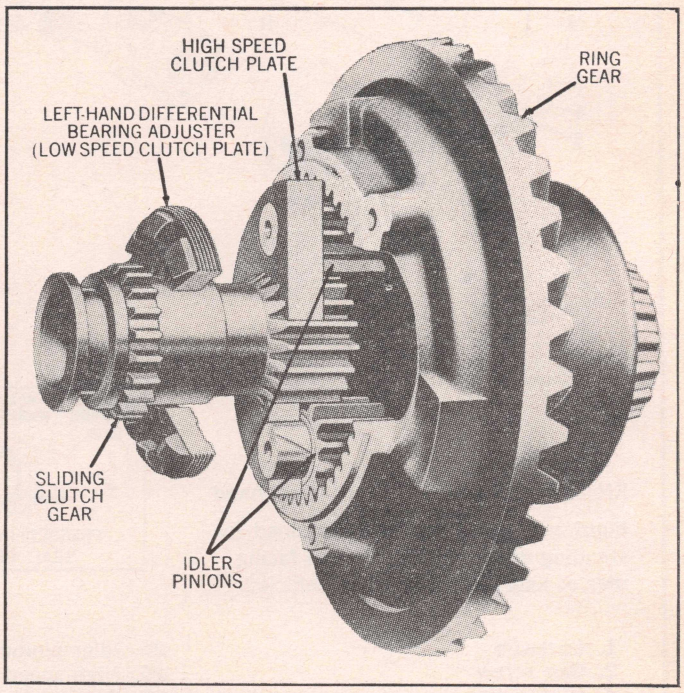

Fig. 14 Sliding clutch gear position for high axle ratio

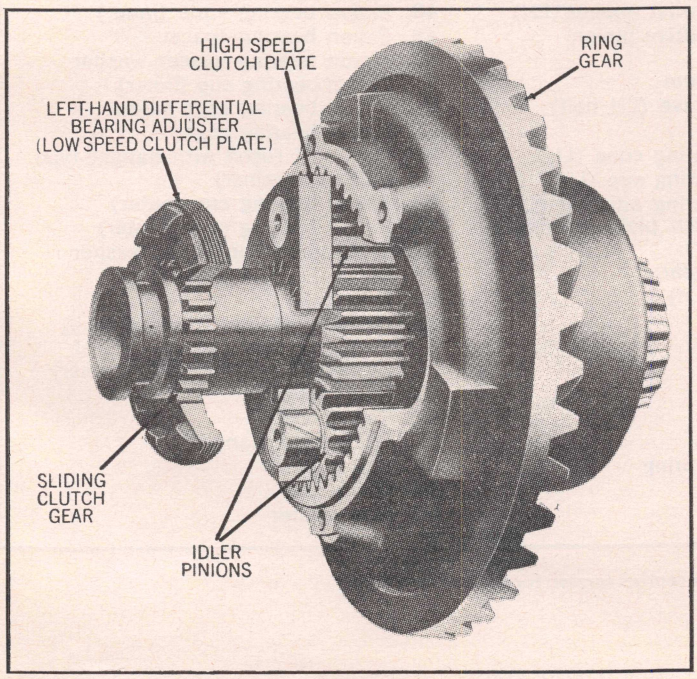

Fig. 15 Sliding clutch gear position for low axle ratio

DISASSEMBLE

Differential Carrier, Fig. 16

1. Place axle in low range. Remove shift unit nuts and washers. Disconnect electric wires, air tubing or vacuum tubing as necessary to remove shift unit.
2. Drain lubricant. Disconnect propeller shaft and remove axle shafts. Unfasten and lift differential carrier from axle housing. Discard carrier gasket.
3. Unscrew pipe plug and remove spring and oil distributor.
4. Remove seal and spring from shift fork. Remove expansion plugs and drive out shift fork shaft. Disengage and remove shift fork.
5. Remove sliding clutch gear. *If preliminary inspection reveals that ring gear and drive pinion are satisfactory, check backlash and tooth pattern for easier adjustment in reassembly.*

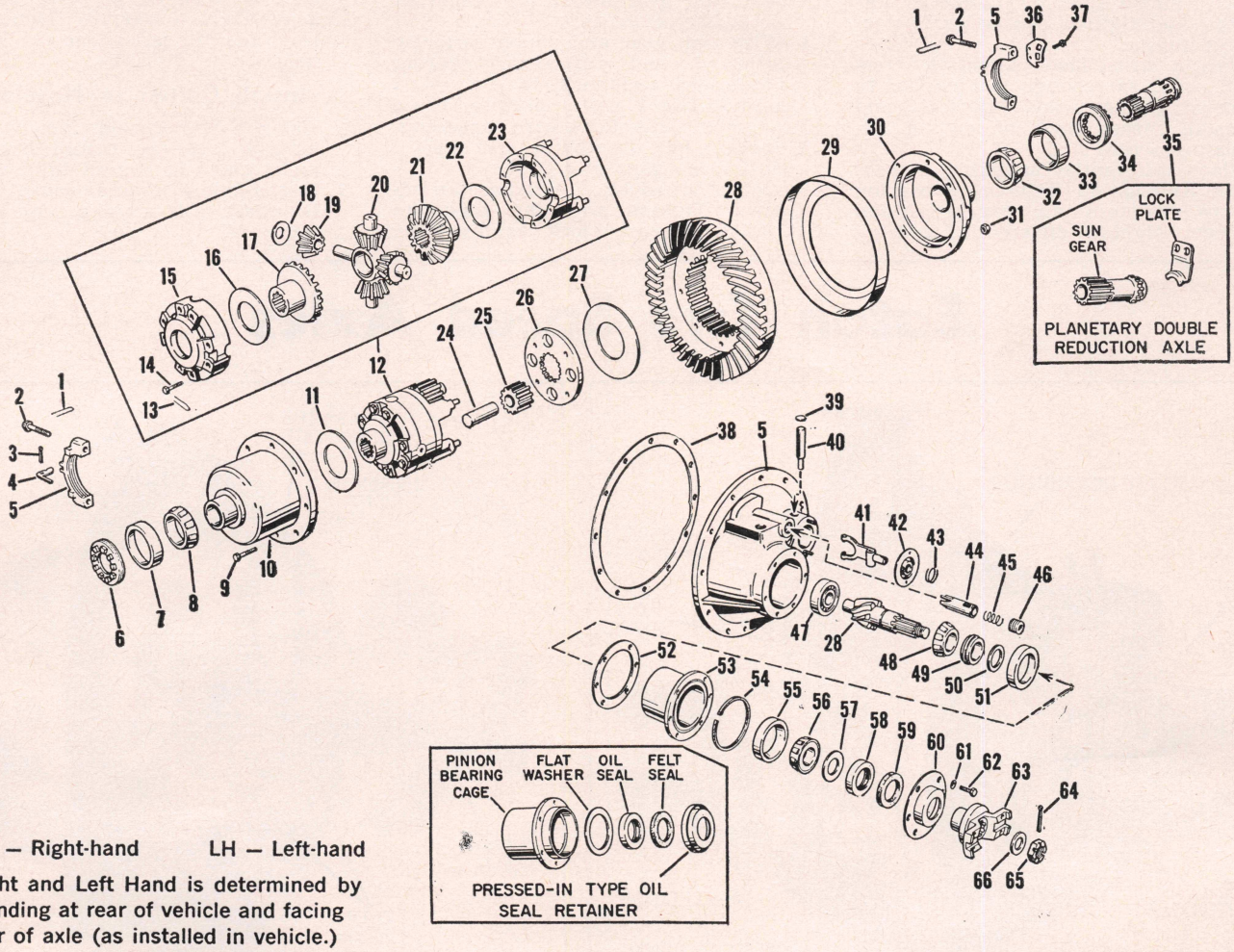

RH — Right-hand LH — Left-hand

Right and Left Hand is determined by standing at rear of vehicle and facing rear of axle (as installed in vehicle.)

1. Lockwire
2. Cap screw
3. Cotter pin
4. Adjuster lock (RH)
5. Differential carrier and bearing caps (matched parts)
6. Differential bearing adjuster (RH)
7. Differential bearing cup (RH)
8. Differential bearing cone (RH)
9. Bolt
10. Gear support case (RH half)
11. Support case thrust washer (RH)
12. Differential assembly
13. Lockwire
14. Cap screw
15. Differential case (RH half)
16. Side gear thrust washer (RH)
17. Side gear (long-hub, RH)
18. Side pinion thrust washer
19. Side pinion
20. Spider
21. Side gear (short hub, LH)
22. Side gear thrust washer (LH)
23. Differential case (LH half)
24. Idler pinion pin
25. Idler pinion
26. High-speed clutch plate
27. Support case thrust washer (LH)
28. Ring gear and drive pinion (matched set)
29. Oil collector drum
30. Gear support case (LH half)
31. Locknut
32. Differential bearing cone (LH)
33. Differential bearing cup (LH)
34. Differential bearing adjuster (LH) (low-speed clutch plate is integral part of adjuster)
35. Sliding clutch gear
36. Adjuster lock (LH)
37. Cap screw
38. Carrier gasket
39. Expansion plug
40. Shift fork shaft
41. Shift fork
42. Shift fork seal
43. Shift fork seal spring
44. Oil distributor
45. Spring
46. Pipe plug
47. Pinion pilot bearing
48. Pinion bearing cone (inner)
49. Pinion bearing spacer
50. Pinion bearing spacer washer
51. Pinion bearing cup (inner)
52. Pinion bearing cage shims
53. Pinion bearing cage
54. Cork seal (used with flanged-type oil seal retainer)
55. Pinion bearing cup (outer)
56. Pinion bearing cone (outer)
57. Companion flange flat washer
58. Oil seal
59. Felt seal
60. Oil seal retainer (flanged type) (See insert for components of pressed-in type oil seal retainer)
61. Lockwasher
62. Cap screw
63. Companion flange
64. Cotter pin
65. Pinion nut
66. Flat washer

Fig. 16 Disassembled view of differential carrier for Two Speed Axle

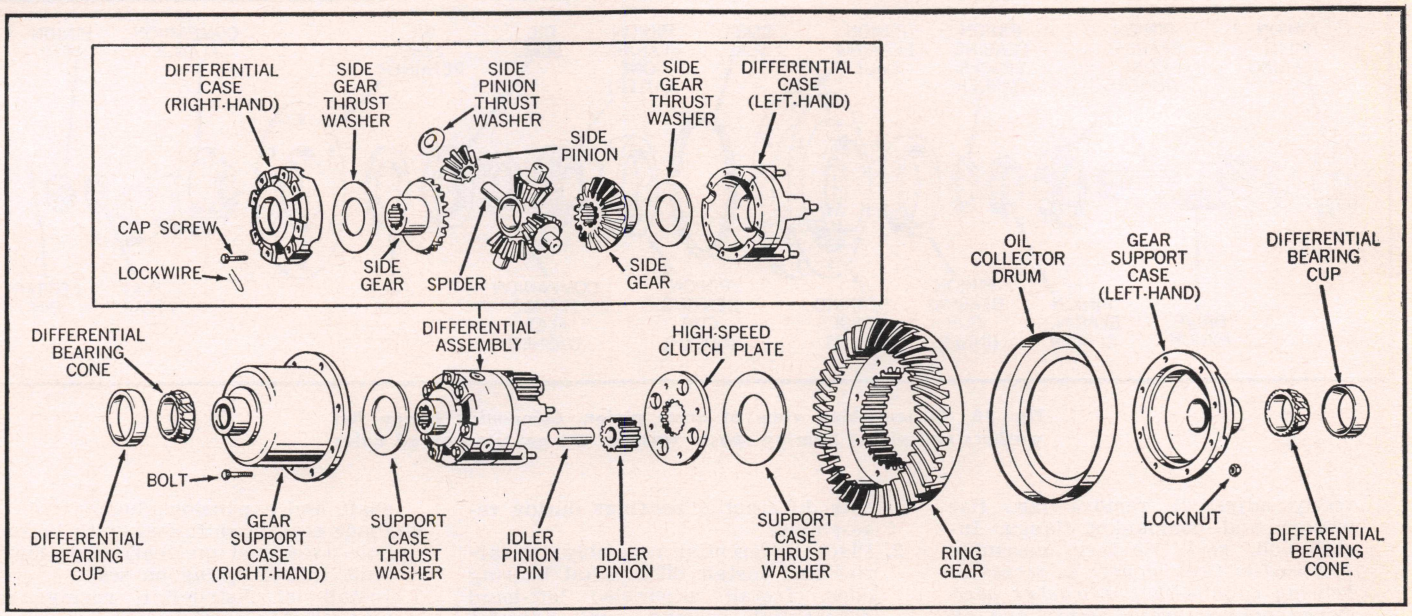

Fig. 17 Disassembled view of differential assembly

6. Punch mark right-hand differential bearing adjuster for location of lock in reassembly. Cut lockwire and remove differential bearing cap screws. Remove right-hand differential bearing cap, bearing adjuster and lock.
7. Cut lockwire and remove left-hand differential bearing cap, bearing adjuster and lock as an assembly to assure correct position of ring gear during reassembly.
8. Tilt up planetary end of differential, then lift out differential assembly.
9. Remove pinion bearing cage-to-differential carrier capscrews. Then drive pinion assembly out of carrier, being careful not to allow assembly to fall on flange. *Note size and quantity of shims on bearing cage flange* for easier adjustment in reassembly.

Drive Pinion

1. Hold companion flange in vise and, after removing cotter pin, nut and flat washer, drive pinion out of flange.
2. Remove pinion bearing cage assembly, oil seal retainer assembly (flanged or pressed-in type) flange flat washer (if used) and outer bearing cone from pinion bearing cage.
3. Discard pinion bearing cage cork seal (used only with flanged type oil seal retainer).
4. Remove oil seal and felt seal from oil seal retainer. If replacement is necessary, remove bearing cups from cage, using suitable puller.
5. Remove pinion bearing spacer washer (if used) and spacer from drive pinion.
6. Remove inner bearing cone and pilot bearing, using pullers.

Differential

1. Remove locknuts and bolts holding gear support cases together. Tap alternately on opposite sides of ring gear with a soft-faced hammer until ring gear is free of flange on support case.
2. Lift off left-hand support case, oil collector drum and thrust washer.
3. Lift off ring gear.
4. Pry off high-speed clutch plate, then remove idler pinions and pins.
5. Lift out differential assembly. Remove support case thrust washer.
6. Punch mark differential cases for correct location in reassembly. Cut lockwires and remove capscrews, then lift off right-hand differential case.
7. Lift out long-hub side gear and thrust washer.
8. Lift out spider, pinions and thrust washers. Remove short-hub side gear and thrust washer from left-hand differential case.
9. To remove differential bearing cones, place pilot punch in holes provided in gear case support. Tap on bearing cone inner race, alternately through each hole until cone is removed. Remove bearing cones from both support cases in the same manner.

REASSEMBLE

Differential, Fig. 17

1. Press bearing cones on gear support case.
2. Place thrust washer and short-hub side gear in left-hand differential case. Assemble side pinions and thrust washers to spider, then place this assembly in left-hand differential case.
3. Place long-hub side gear with thrust washer on side pinions. Place right-hand differential case over differential gears, aligning punch marks on both cases. Then install capscrews and tighten to correct torque. Lockwire capscrews.
4. Place right-hand support case thrust washer and differential assembly in right-hand support case. Install spider and pinions. Place high speed clutch plate on idler pinions. *Make certain that chamfered teeth of clutch plate are positioned toward idler pinions.*
5. Mount ring gear, oil collector drum, thrust washer and left-hand support case on right-hand support case. *During assembly of these parts, temporarily place two bolts in mounting holes. This procedure will assure bolt hole alignment as these parts are assembled into final position. Secure assembly with bolts and locknuts. Temporarily install sliding clutch gear and rotate idler pinions to make sure parts are assembled correctly. Tighten locknuts to correct torque.*

Drive Pinion, Fig. 18

1. Press pinion pilot bearing on drive pinion, then stake in place as shown in Fig. 12.
2. Press inner bearing cone on drive pinion.
3. If removed, press bearing cups in bearing cage.
4. Install new felt seal and oil seal in retainer.
5. Lubricate drive pinion bearings. Place pinion bearing spacer, spacer washer (if used), bearing cage and outer bearing cone on drive pinion. *Do not install oil seal retainer until pinion bearing adjustment is completed.*
6. Temporarily assemble companion flange as follows: Place flange flat washer (if used) on drive pinion. Press flange on pinion and install flat washer and pinion nut, tightening nut to correct torque. *Rotate bearing cage while tightening pinion nut.* Check pinion bearing preload adjustment as outlined previously.
7. To install oil seal retainer assembly (after drive pinion bearings are cor-

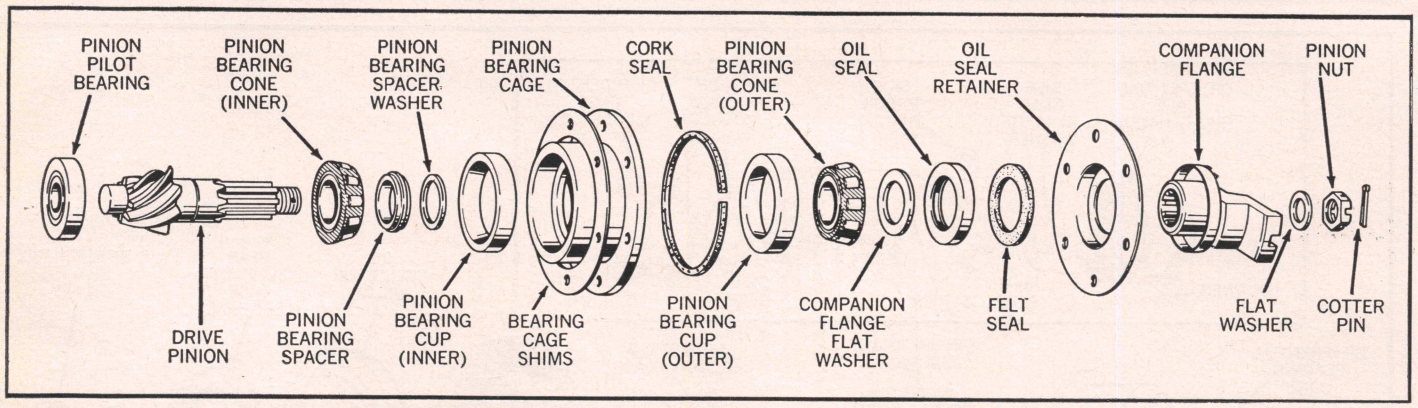

Fig. 18 Disassembled view of drive pinion. Companion flange flat washers and pinion bearing spacer washers are not used on all axles

rectly adjusted) remove nut, flat washer and companion flange. Install oil seal retainer assembly *(pressed-in type mounts in recess of bearing cage with flat washer positioned between cage recess and oil seal retainer. Flanged-type is attached with same capscrews that fasten bearing cage)*. Install companion flange, flat washer and nut, tightening nut to correct torque.

Differential Carrier

1. Using same quantity and size of shims that were removed during disassembly on pinion bearing cage flange, install drive pinion assembly in carrier. Install bearing cage capscrews and lockwashers, tightening capscrews to correct torque. Lubricate differential bearings during reassembly.
2. Place differential assembly in carrier and install differential bearing cups. Install assembled left-hand differential bearing cap, adjuster and lock. Install right-hand differential bearing cap and adjuster. Install and finger tighten differential bearing capscrews. Tighten right-hand bearing adjuster to seat differential bearings. Adjust ring gear and drive pinion as outlined previously.
3. With ring gear and drive pinion correctly adjusted, tighten differential bearing cap screws to correct torque. Then install cotter pins to secure locks and lockwire capscrews.
4. Install sliding clutch gear.
5. Install and engage shift fork with sliding clutch gear. Install shift fork shaft and expansion plugs.
6. Place seal on shift fork with bottom hole (stamped on seal) over lower stud. Install spring on seal.
7. Install oil distributor, spring and pipe plug in carrier.

Install Carrier In Housing

1. Using a new gasket, install differential carrier in axle housing. Install and tighten capscrews to correct torque. Install axle shafts and connect propeller shaft. Fill housing with correct lubricant.
2. Install electric shift unit or air-torsion spring unit on carrier, engaging swivel with slot in shift fork shaft. Install mounting nuts and washers. For electric shift, connect electric wires. For air-torsion spring shift, connect air line to unit.

Eaton Planetary Double Reduction Axles

This axle assembly, Fig. 19, is designed to provide a compact unit with heavy-duty load capacity. This is accomplished by incorporating a rugged ring gear and drive pinion set and a durable planetary unit in a single axle housing.

Differential Carrier Service

Remove the differential carrier from the axle housing as outlined for the two speed axle. Procedures for disassembly are the same as for the two speed axle. However, the Planetary Double Reduction Axle does not use a shift mechanism.

A sun gear is used in place of the sliding clutch gear. To remove the sun gear, remove the retainer which holds the sun gear in position, then remove sun gear.

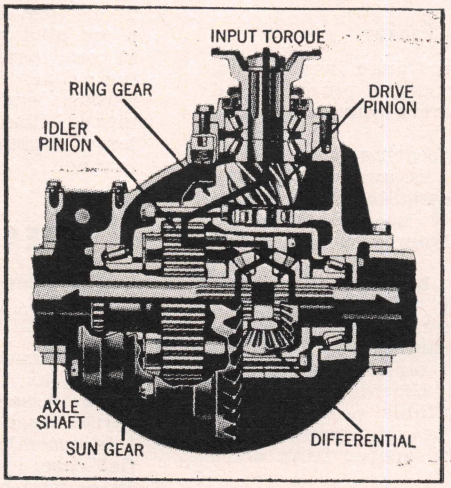

Fig. 19 Power flow through Planetary Double Reduction Axle. This unit is similar to the two speed type but it does not have a shift unit

Eaton "D" Series Tandem Drive Axles

The Series "D" driving unit consists of two axles coupled by a power divider. Three different combinations are available:

1. A single reduction forward axle with power divider, and a single reduction rearward axle.
2. A two-speed forward axle with power divider, and a two-speed rearward axle.
3. A planetary double reduction forward axle with power divider, and a planetary double reduction rearward axle.

DISASSEMBLE

It is recommended, but not necessary, that the axle housing cover be removed to replace the differential carrier and power divider assembly.

1. Drain lubricant, disconnect propeller shafts at companion flanges and remove axle shafts.
2. Remove companion flange from output shaft.
3. Remove axle housing cover and discard gasket.
4. To disassemble axle housing cover, remove oil seal from output shaft opening, using a suitable puller. Remove snap ring from output shaft opening, then press rear bearing from axle housing cover. *Rear bearing sleeve is mounted on output shaft.*
5. Disconnect lockout shift lever connections.
6. If axle is "Two-Speed", remove shift units, referring to "Two-Speed Axle" Section.
7. After removing stud nuts and lockwashers, lift and pull differential carrier and power divider out of axle housing.

Carrier & Power Divider, Figs. 20, 21, 22

1. If preliminary inspection reveals that ring gear and drive pinion are satisfactory, check backlash and tooth contact pattern for easier adjustment in reassembly.
2. Remove carrier cover from carrier.
3. Lift inter-axle differential off output shaft side gear.
4. Before disassembling inter-axle differential, punch mark cases for correct position during reassembly. Cut lockwire and remove nuts and bolts. Separate cases and remove thrust washers, side pinions, bushings and spider.

Output Shaft

1. Drive output shaft from differential carrier, driving at companion flange end of shaft.
2. To disassemble output shaft, remove snap ring, then lift off side gear assembly. Discard output shaft "O" rings. If replacement is necessary, remove bushing from bore of output shaft.

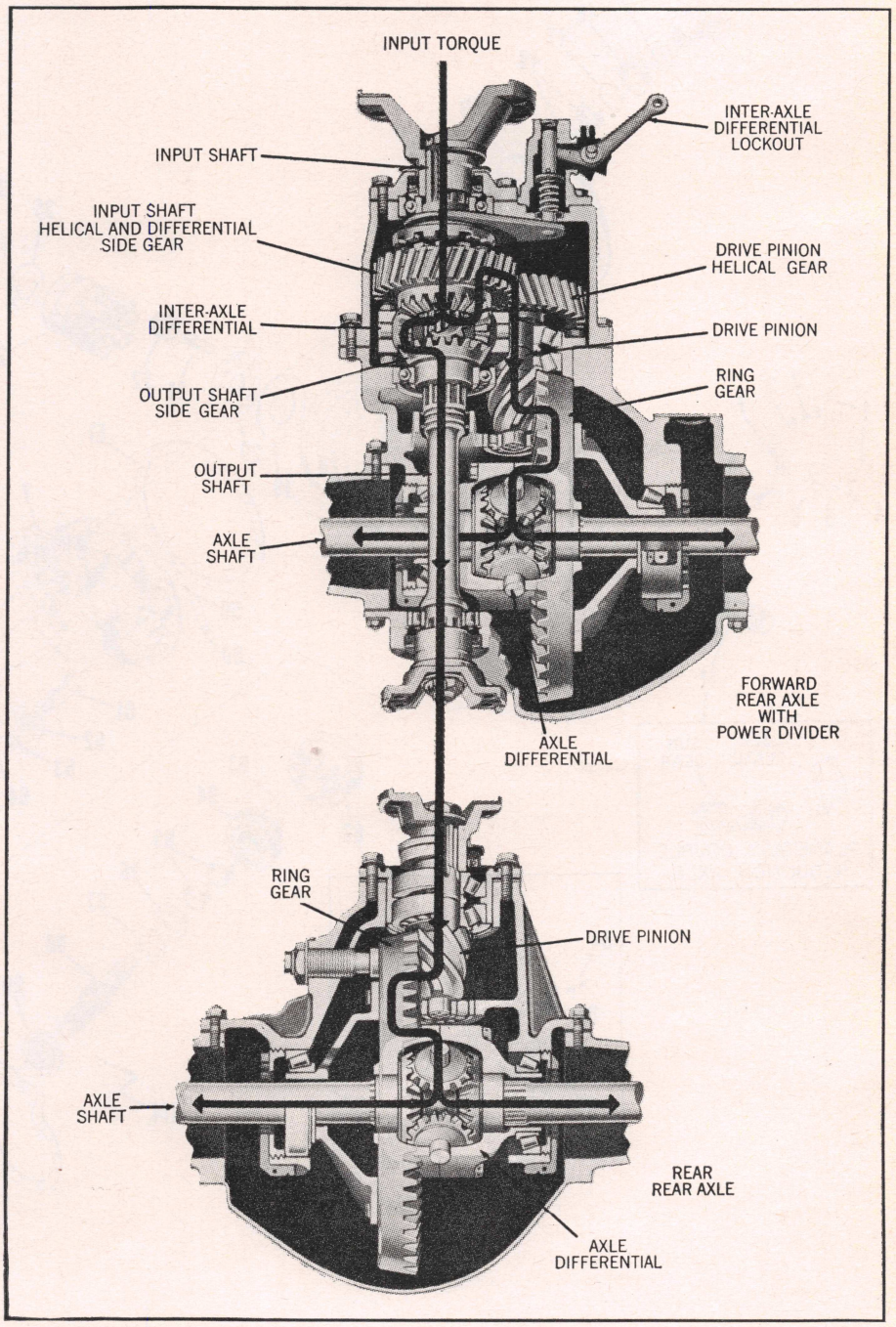

Fig. 20 Power flow through Single Reduction "D" Series Tandem Drive Axle

3. To remove output shaft front bearing from side gear, place side gear assembly in press with split-type puller plates under front bearing, then press side gear out of front bearing.

Input Shaft

1. Remove snap ring from input shaft, then lift off helical side gear, thrust washer and "D" washer. If replacement is necessary, press bushings from bore of side gear.
2. Remove companion flange from input shaft.
3. Remove input shaft bearing cover and shims. *Note size and quantity of shims for easier adjustment during reassembly.* Remove oil seal and felt seal from bearing cover.
4. Drive input shaft out of differential carrier cover.

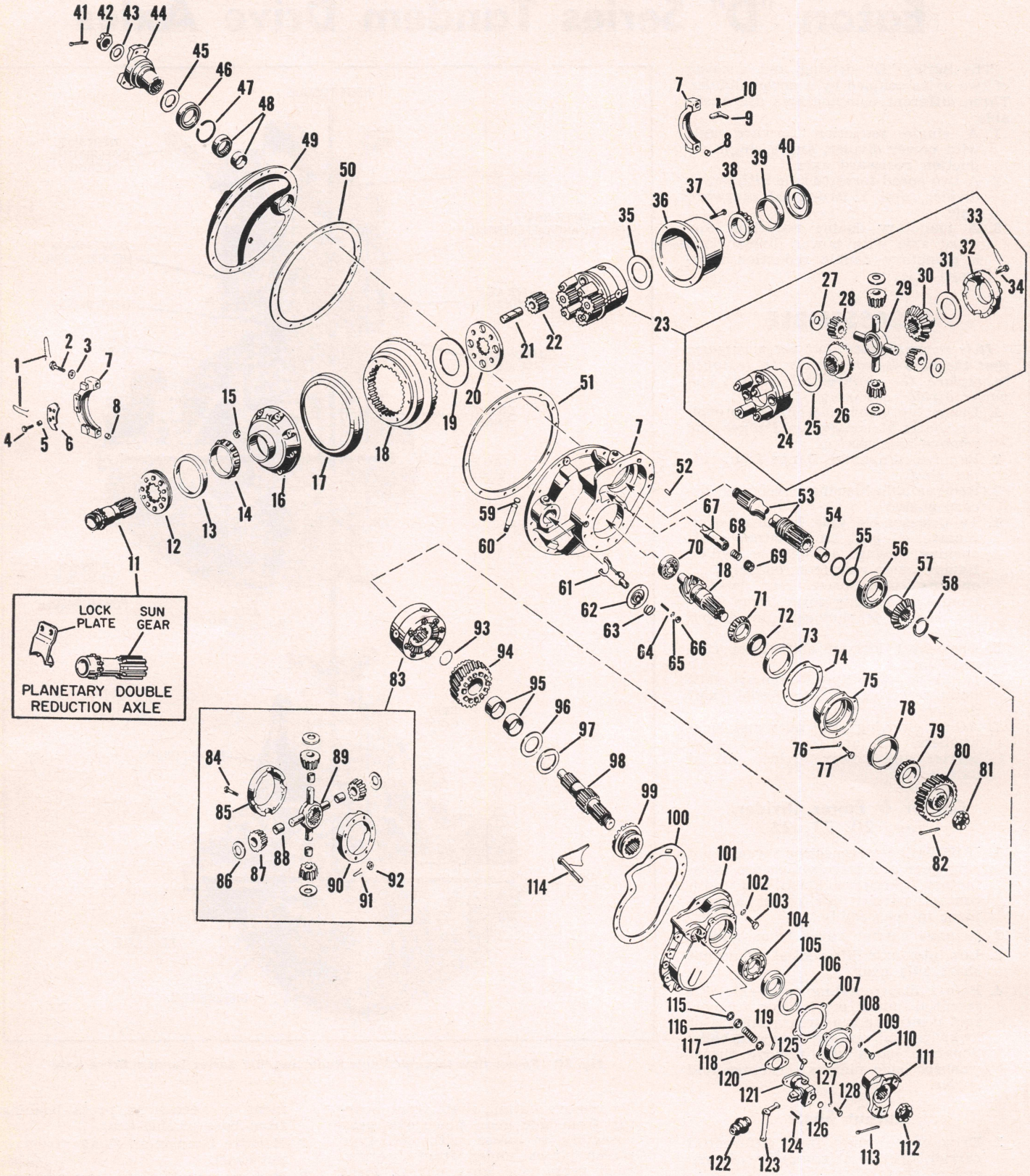

Fig. 21 Disassembled view of forward rear axle for Two-Speed and Planetary Double Reduction "D" Series Tandem Drive Axles

RH — Right-hand LH — Left-hand

Right and Left Hand is determined by standing at rear of vehicle and facing rear of axle (as installed in vehicle)

1. Lockwire
2. Cap screw
3. Flat washer
4. Cap screw
5. Dowel bushing
6. Adjuster lock (RH)
7. Differential carrier and bearing caps (matched parts)
8. Dowel bushing
9. Adjuster lock (LH)
10. Cotter pin
11. Sliding clutch gear
12. Differential bearing adjuster (RH) (low speed clutch plate is integral part of adjuster)
13. Differential bearing cup (RH)
14. Differential bearing cone (RH)
15. Locknut
16. Gear support case (RH half)
17. Oil collector drum
18. Ring gear and drive pinion (matched set)
19. Support case thrust washer (RH)
20. High speed clutch plate
21. Idler pinion pins
22. Idler pinions
23. Differential assembly
24. Differential case (RH half)
25. Side gear thrust washer (RH)
26. Side gear (short hub, RH)
27. Side pinion thrust washer
28. Side pinion
29. Spider
30. Side gear (long hub, LH)
31. Side gear thrust washer (LH)
32. Differential case (LH half)
33. Lockwire
34. Cap screw
35. Support case thrust washer (LH)
36. Gear support case (LH half)
37. Bolt
38. Differential bearing cone (LH)
39. Differential bearing cup (LH)
40. Differential bearing adjuster (LH)
41. Cotter pin
42. Output shaft nut
43. Flat washer
44. Output companion flange
45. Rear bearing retainer washer
46. Oil seal
47. Rear bearing snap ring
48. Output shaft rear bearing and sleeve (matched parts)
49. Axle housing cover
50. Cover gasket
51. Carrier gasket
52. Dowel pins
53. Output shaft
54. Output shaft bushing
55. Output shaft "O" rings
56. Output shaft front bearing
57. Output shaft side gear
58. Output shaft snap ring
59. Expansion plug
60. Shift fork shaft
61. Shift fork
62. Shift fork seal
63. Seal spring
64. Stud
65. Lockwasher
66. Stud nut
67. Oil distributor
68. Spring
69. Pipe plug
70. Pinion pilot bearing
71. Pinion bearing cone (inner)
72. Pinion bearing spacer
73. Pinion bearing cup (inner)
74. Pinion bearing cage shims
75. Pinion bearing cage
76. Lockwasher
77. Cap screw
78. Pinion bearing cup (outer)
79. Pinion bearing cone (outer)
80. Pinion helical gear
81. Pinion nut
82. Cotter pin
83. Inter-axle differential assembly
84. Bolt
85. Inter-axle differential case (female half)
86. Side pinion thrust washer
87. Side pinion
88. Side pinion bushing
89. Spider
90. Inter-axle differential case (male half)
91. Lockwire
92. Nut
93. Input shaft snap ring
94. Helical and differential side gear
95. Helical and differential side gear bushings
96. Helical and differential side gear thrust washer
97. Helical and differential side gear "D" washer
98. Input shaft
99. Input shaft sliding clutch
100. Differential carrier cover gasket
101. Differential carrier cover
102. Lockwasher
103. Cap screw
104. Input shaft bearing
105. Oil seal
106. Felt seal
107. Bearing cover shims
108. Bearing cover
109. Lockwasher
110. Cap screw
111. Input companion flange
112. Input shaft nut
113. Cotter pin
114. Shift fork and push rod
115. Felt seal
116. Seal retainer
117. Compression spring
118. Retainer washer
119. Retainer washer pin
120. Shift lever bracket gasket
121. Shift lever bracket
122. Shift lever boot
123. Shift lever
124. Cotter pin
125. Clevis pin
126. Expansion plug
127. Lockwasher
128. Cap screw

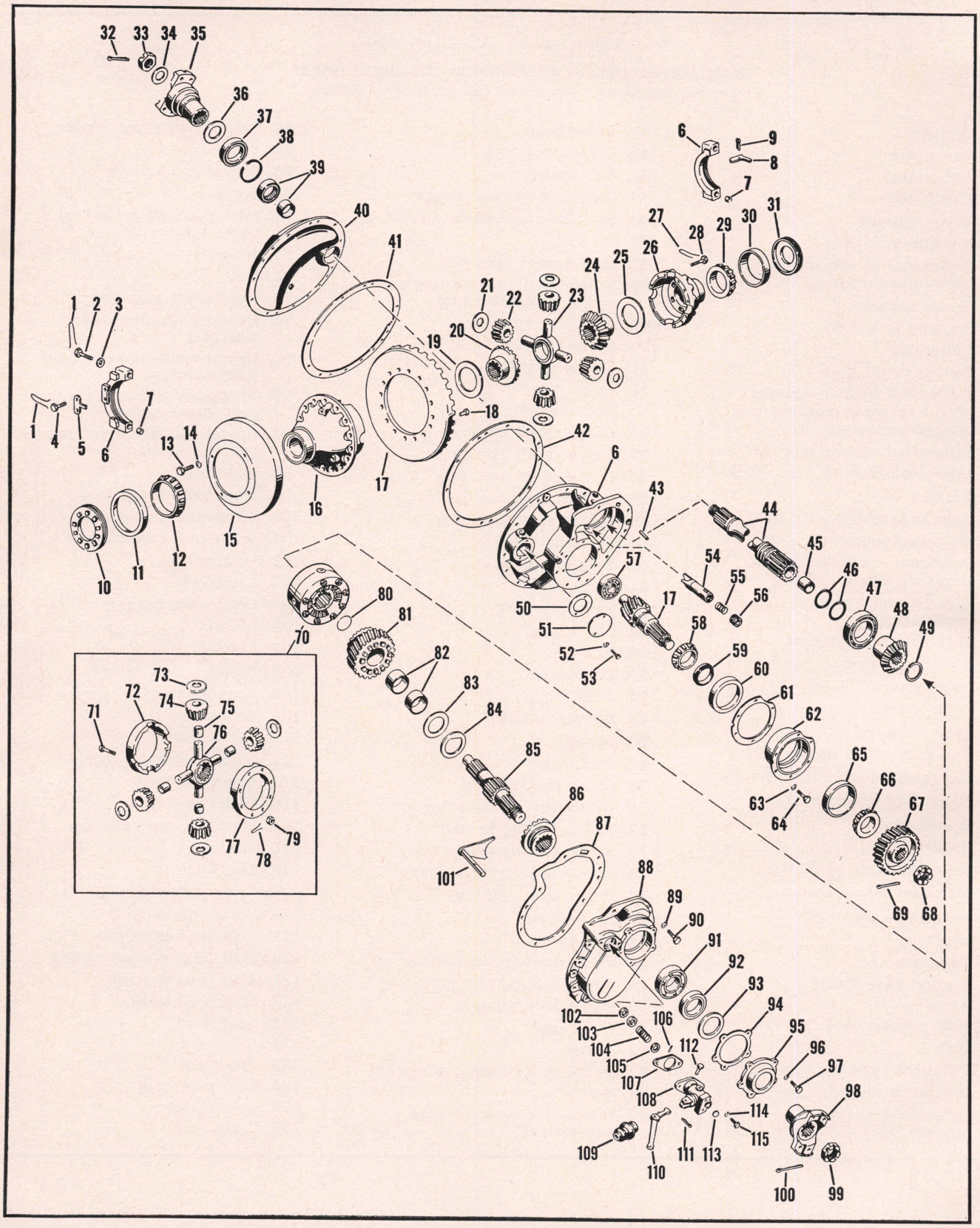

Fig. 22 Disassembled view of forward rear axle for Single Reduction "D" Series Tandem Drive Axle

RH – Right-hand LH – Left-hand

Right and Left Hand is determined by standing at rear of vehicle and facing rear of axle (as installed in vehicle)

1. Lockwire
2. Cap screw
3. Flat washer
4. Cap screw
5. Adjuster lock (RH)
6. Differential carrier and bearing caps (matched parts)
7. Dowel bushing
8. Adjuster lock (LH)
9. Cotter pin
10. Differential bearing adjuster
11. Differential bearing cup (RH)
12. Differential bearing cone (RH)
13. Cap screw
14. Lockwasher
15. Oil collector drum
16. Differential case (RH half)
17. Ring gear and drive pinion (matched set)
18. Rivet
19. Side gear thrust washer (RH)
20. Side gear (RH)
21. Side pinion thrust washer
22. Side pinion
23. Spider
24. Side gear (LH)
25. Side gear thrust washer (LH)
26. Differential case (LH half)
27. Lockwire
28. Cap screw
29. Differential bearing cone (LH)
30. Differential bearing cup (LH)
31. Differential bearing adjuster (LH)
32. Cotter pin
33. Output shaft nut
34. Flat washer
35. Output companion flange
36. Rear bearing retainer washer
37. Oil seal
38. Rear bearing snap ring
39. Output shaft rear bearing and sleeve (matched parts)
40. Axle housing cover
41. Cover gasket
42. Carrier gasket
43. Dowel pins
44. Output shaft
45. Output shaft bushing
46. Output shaft "O" rings
47. Output shaft front bearing
48. Output shaft side gear
49. Output shaft snap ring
50. Hole cover gasket
51. Hole cover
52. Lockwasher
53. Cap screw
54. Oil distributor
55. Spring
56. Pipe plug
57. Pinion pilot bearing
58. Pinion bearing cone (inner)
59. Pinion bearing spacer
60. Pinion bearing cup (inner)
61. Pinion bearing cage shims
62. Pinion bearing cage
63. Lockwasher
64. Cap screw
65. Pinion bearing cup (outer)
66. Pinion bearing cone (outer)
67. Pinion helical gear
68. Pinion nut
69. Cotter pin
70. Inter-axle differential assembly
71. Bolt
72. Inter-axle differential case (female half)
73. Side pinion thrust washer
74. Side pinion
75. Side pinion bushing
76. Spider
77. Inter-axle differential case (male half)
78. Lockwire
79. Nut
80. Input shaft snap ring
81. Helical and differential side gear
82. Helical and differential side gear bushings
83. Helical and differential side gear thrust washer
84. Helical and differential side gear "D" washer
85. Input shaft
86. Input shaft sliding clutch
87. Differential carrier cover gasket
88. Differential carrier cover
89. Lockwasher
90. Cap screw
91. Input shaft bearing
92. Oil seal
93. Felt seal
94. Bearing cover shims
95. Bearing cover
96. Lockwasher
97. Cap screw
98. Input companion flange
99. Input shaft nut
100. Cotter pin
101. Shift fork and push rod
102. Felt seal
103. Seal retainer
104. Compression spring
105. Retainer washer
106. Retainer washer pin
107. Shift lever bracket gasket
108. Shift lever bracket
109. Shift lever boot
110. Shift lever
111. Cotter pin
112. Clevis pin
113. Expansion plug
114. Lockwasher
115. Cap screw

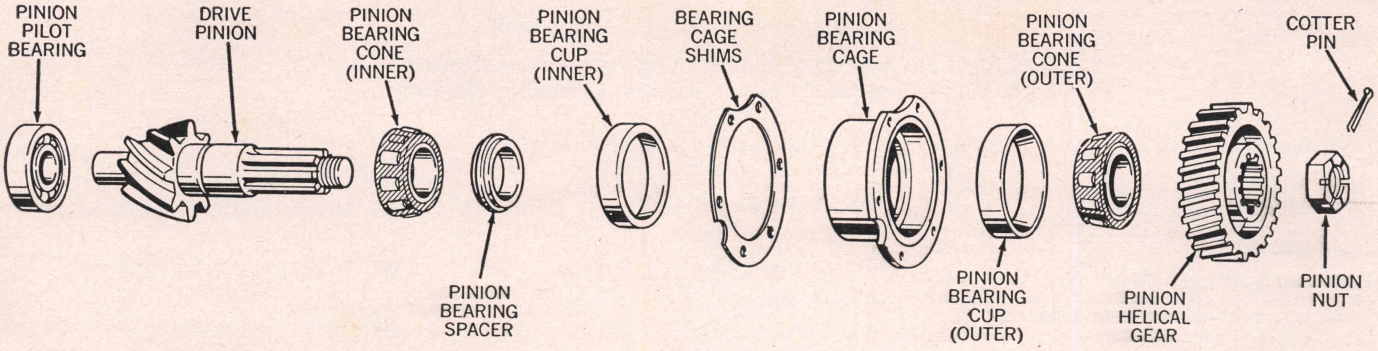

Fig. 24 Disassembled view of "D" Series drive pinion

5. To remove bearing from input shaft, place assembly in a press with threaded end of input shaft upward. Then press input shaft out of bearing.

Lockout Mechanism (Vacuum Type)

Either vacuum-operated or air-operated lockout may be used on "D" Series Axles. The air-operated type is covered further on. The following instructions are for the vacuum-operated lockout.

1. Pull boot off lockout shift lever. Remove clevis pin and remove shift lever.
2. Referring to Fig. 23, remove shift lever bracket. Compress compression spring, then remove pin, retainer washer and compression spring from shift fork and push rod.

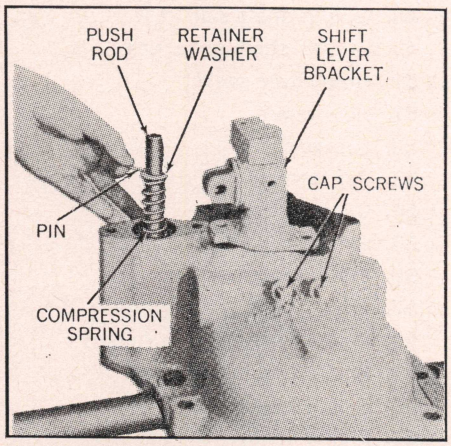

Fig. 23 Vacuum-operated lockout details

cage capscrews are accessible to permit removal of pinion with flange assembled.

(b) The drive pinion for "D" Series Tandem Axles are equipped with a helical gear, Fig. 24, which must be removed to gain access to pinion bearing cage capscrews. Therefore, to remove drive pinion, remove nut previously loosened before differential removal.

(c) Mount bearing puller on helical gear, gripping gear with puller legs and placing puller screw against pinion. Then pull gear off pinion. Remove capscrews from bearing cage and then remove drive pinion assembly.

REASSEMBLE

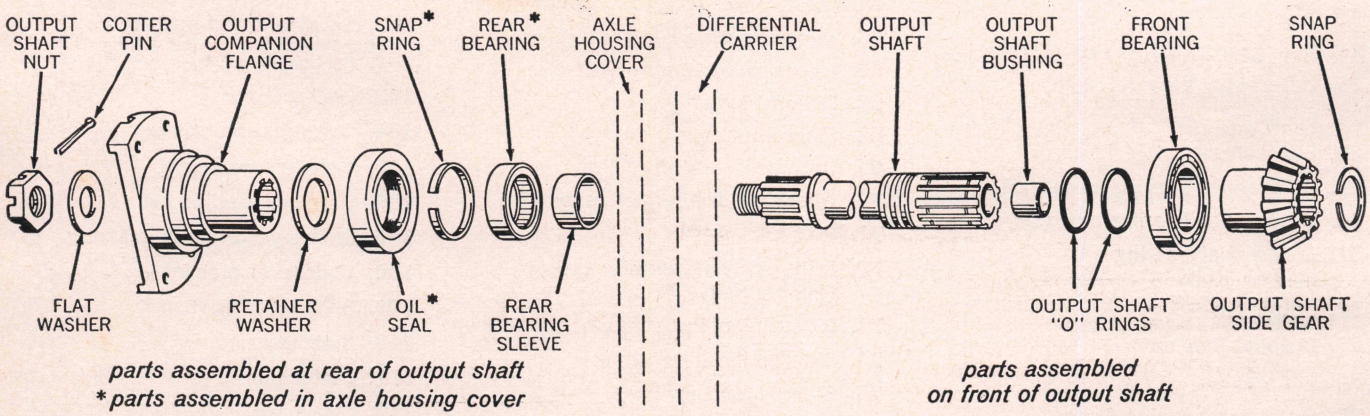

Fig. 25 Disassembled view of output shaft and axle housing cover parts

3. Lift input shaft sliding clutch and shift fork and push rod assembly from differential carrier cover.

Final Disassembly

1. Before removing differential assembly, remove cotter pin and loosen drive pinion helical gear nut.
2. Be sure to remove pipe plug, spring and oil distributor from differential carrier before attempting to remove differential assembly. *Refer to separate sections of this chapter for instructions covering the three types of axles used with the "D" Series combination.*
3. Removing and disassembling the drive pinion is covered in the separate sections of this chapter for the three axle types used, with the following variations:

(a) The drive pinions for the individual axles are equipped with companion flanges. For this type installation, the pinion bearing

Drive Pinion

Refer to separate sections of this chapter for instructions covering the three types of axles except for the following variation:

The drive pinions for the standard axle units are equipped with companion flanges. The pinion bearing cage capscrews are accessible to permit installation of pinion with companion flange installed.

The drive pinion for the "D" Series

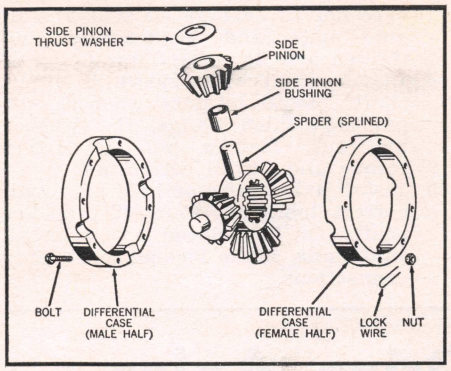

Fig. 26 Disassembled view of inter-axle differential

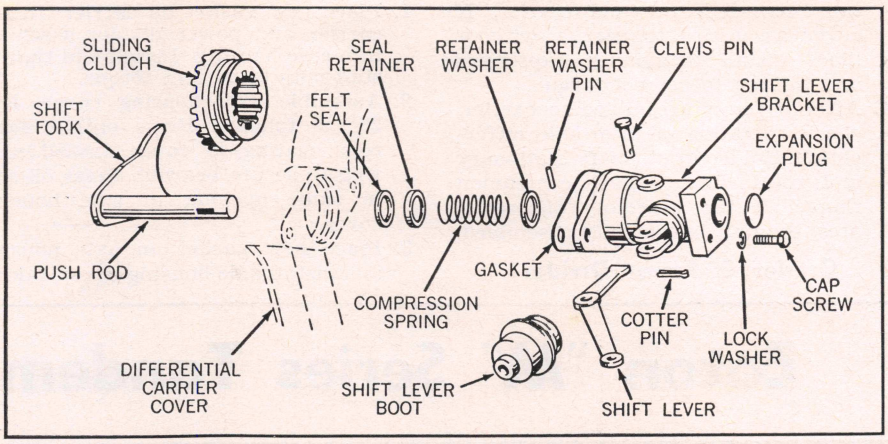

Fig. 27 Disassembled view of vacuum-operated lockout mechanism

Tandem Axle units are equipped with a helical gear, Fig. 24, and the bearing cage capscrews cannot be installed with the helical gear attached to the drive pinion. Install the pinion in these axles with the helical gear removed. After pinion is installed, place helical gear on pinion. Install and tighten pinion nut to correct torque, then install cotter pin.

With drive pinion and differential assembled in differential carrier and correctly adjusted, install power divider components as follows:

Output Shaft

1. If removed, press bushing in bore of output shaft.
2. Press front bearing on output shaft side gear. Place side gear assembly on output shaft and install snap ring.
3. Install two "0" rings in grooves of output shaft.
4. Lubricate output shaft "0" rings, front bearing and bushing, then install output shaft assembly in differential carrier by tapping front bearing into bearing bore of carrier.

Inter-Axle Differential, Fig. 26

1. Install bushings, side pinions and thrust washers on journals of differential spider. Lubricate all parts during reassembly.
2. Place spider assembly in male differential case. Install female case, aligning punch marks made during disassembly, and secure with bolts and nuts. Tighten nuts to correct torque and install lockwire.
3. Place inter-axle differential on output shaft side gear. Position differential with nuts away from output shaft side gear.

Lockout Mechanism (Vacuum Type), Fig. 27

Instructions for the air-operated type lockout is covered further on.

1. Install felt seal and seal retainer in recess in carrier cover. Engage lockout shift fork with groove in input shaft sliding clutch. Place this assembly in differential carrier cover.
2. Place compression spring and retainer washer on push rod, depress spring and install retainer washer pin. Coat spring and retainer washer with grease.
3. Install new gasket and shift lever bracket on differential carrier cover and install capscrews and lockwashers. Tighten screws to correct torque. If removed, install grease fitting in bracket.
4. Place lockout shift lever in bracket, engaging slot in push rod. Install clevis pin and cotter pin.
5. Place boot over shift lever and secure boot to bracket.

Input Shaft, Fig. 28

1. Press bearing on threaded end of input shaft.
2. Place input shaft assembly in differential carrier cover, engaging sliding clutch.
3. Install felt seal and oil seal in input shaft bearing cover. Using same size and quantity of shims removed during disassembly, install shims and bearing cover on carrier cover. Install capscrews finger tight, with lockwashers. *To check bearing adjustment or determine thickness of shims required, install bearing cover on carrier cover without shims. Install and tighten capscrews finger tight. Then, using a feeler gauge, measure clearance between bearing cover and carrier cover. This clearance measurement plus .003" would equal the thickness of shims required for correct bearing clearance.*
4. Install input companion flange and nut on input shaft. Tighten nut to correct torque and install cotter pin. Tighten input shaft bearing cover capscrews to correct torque.
5. If removed, press two bushings in bore of helical side gear. Place "D" washer, thrust washer and helical side gear assembly on input shaft. Install snap ring on input shaft to secure these parts.

Differential Carrier Cover

1. Place new cover gasket on differential carrier.
2. Place carrier cover on differential carrier, aligning dowel pins with holes in cover. *During reassembly of cover to carrier, slowly rotate input shaft to engage its splines with splines in bore of inter-axle differential spider.*
3. Carefully install two cover capscrews, watching for possible bind-

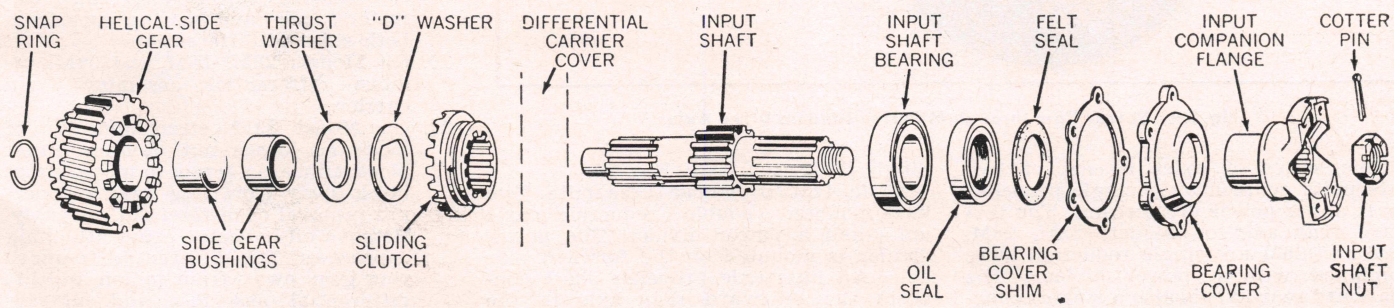

Fig. 28 Disassembled view of input shaft

ing between cover and carrier. If cover assembles to carrier without bind, install remaining capscrews and tighten to correct torque.

4. After cover is assembled to carrier, check operation of inter-axle differential. Hold output shaft stationary and rotate input shaft companion flange. If the assembly differentiates, the unit is correctly assembled.

Carrier & Power Divider

1. Place new gasket on carrier. Install carrier and power divider assembly into axle housing. Install and tighten stud nuts to correct torque.
2. Assemble axle housing cover, Fig. 25, as follows: Press output shaft rear bearing in cover. Install snap ring to secure bearing. Press oil seal in same opening in axle housing cover.
3. Place new gasket on axle housing and install axle housing cover, taking care not to damage oil seal. Install stud nuts and lockwashers and tighten nuts to correct torque.
4. Install rear bearing sleeve in output shaft. Install retainer washer, output companion flange, flat washer and nut. Tighten nut to correct torque and install cotter pin.
5. Install axle shafts and fill axle with correct lubricant. Connect propeller shafts. On Two-Speed Axles, install shift units. Make lockout shift lever connections.

Eaton "M" Series Tandem Drive Axles

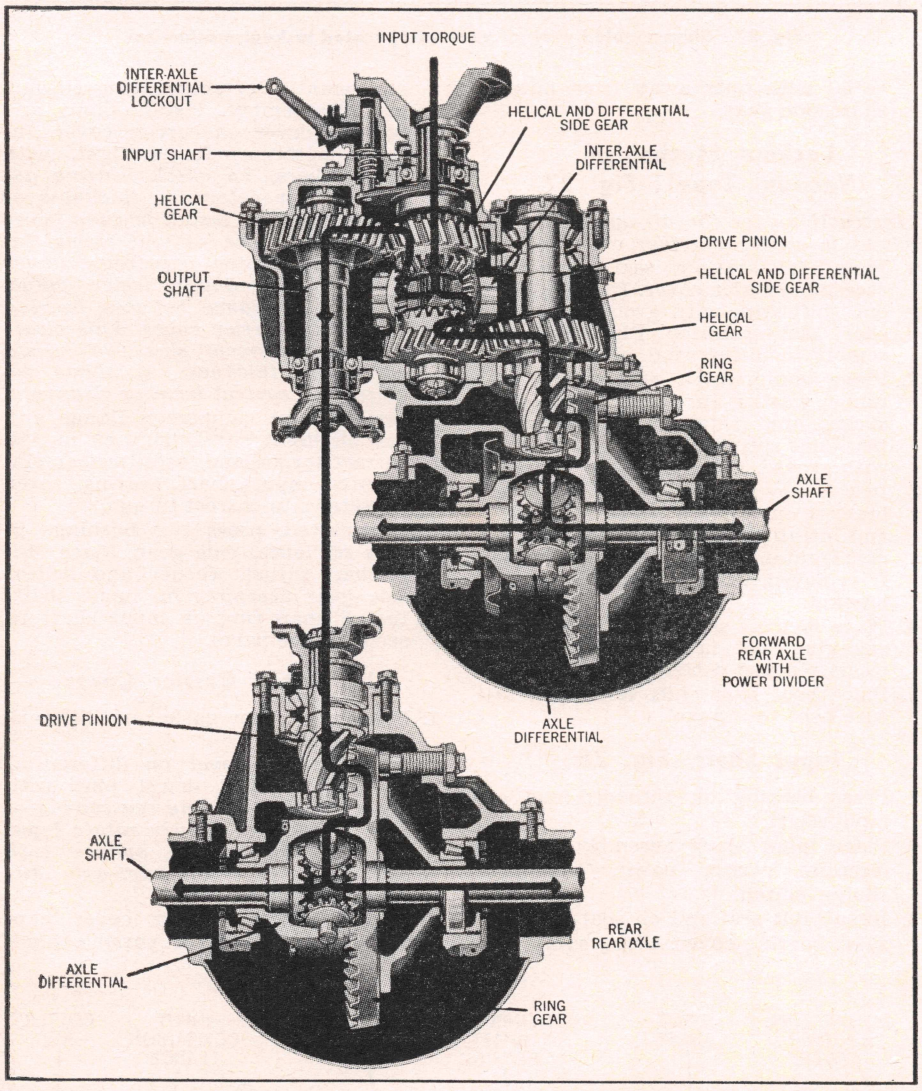

Fig. 29 Power flow through M Series Tandem Drive Axles

This series of axles consist of two axle units coupled by a single propeller shaft and a power divider unit. The forward rear axle on Models 22M, 28M, 32M and 36M are single reduction units combined with a power divider. The rearward rear axle is also a single reduction unit similar to the standard Eaton Single Reduction Axle, Fig. 29.

Model 42M consists of three units: Two knee-mounted double reduction axle units and a power divider. The power divider is mounted on the forward rear axle. An inter-axle propeller shaft connects the rearward rear axle to the power divider.

MODELS 22M, 28M, 32M, 36M

Note: Inasmuch as the rearward rear axle is similar to the standard Eaton Single Reduction Axle, refer to that section of this chapter for service procedures. The following material covers the procedures on the forward rear axle.

DISASSEMBLE

Carrier & Power Divider

1. Drain lubricant. Disconnect propeller shafts and remove axle shafts.
2. Disconnect lockout shift lever.
3. Unfasten and remove differential carrier and power divider assembly from axle housing.
4. If preliminary inspection reveals that ring gear and drive pinion are satisfactory, check backlash with dial indicator and take a tooth contact pattern for reference and easier adjustment in reassembly.
5. Remove pinion bearing cage cover. Remove and discard cork seal. Hold input and output companion flanges and loosen (but do not remove) pinion nut.
6. Hold input companion flange and loosen (but do not remove) flange nut.
7. Hold output companion flange and loosen (but do not remove) flange nut.
8. Punch mark differential bearing caps and carrier for correct location in reassembly. Also punch mark differential bearing adjusters for correct location of adjuster locks, Fig. 30.
9. Cut lockwires and remove differential bearing cap screws, caps, adjusters, locks and bearing cups from both sides of differential.
10. On Models 22M, 28M and 36M, remove differential assembly from carrier.
11. On Model 32M, straighten ear of lock and loosen nut. Loosen thrust block adjusting screw to move thrust block away from ring gear and permit removal of differential assembly. Remove oil collector drum attaching capscrews. Tilt differential to move ring gear away from pinion and lift differential assembly and oil collector drum from carrier.

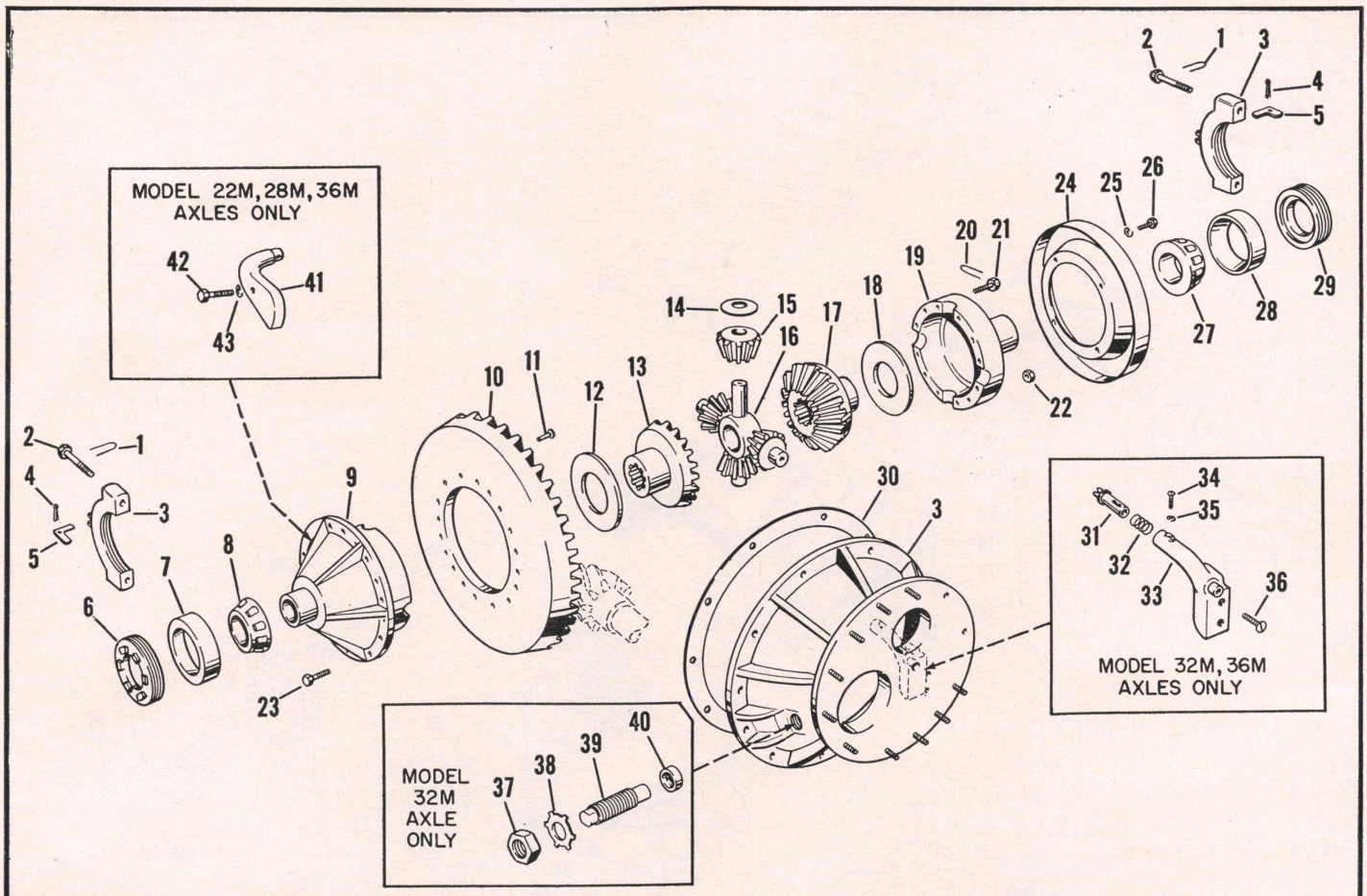

RH — Right-hand LH — Left-hand Right and Left Hand is determined by standing at rear of vehicle and facing rear of axle (as installed in vehicle).

1. Lockwire
2. Cap screws
3. Differential carrier and bearing caps (matched parts)
4. Cotter pin
5. Adjuster lock
6. Differential bearing adjuster (RH)
7. Differential bearing cup (RH)
8. Differential bearing cone (RH)
9. Differential case (flanged half)
10. Ring gear and drive pinion (matched set)
11. Ring gear rivet
12. Side gear thrust washer (RH)
13. Side gear (RH)
14. Side pinion thrust washer
15. Side pinion
16. Spider
17. Side gear (LH)
18. Side gear thrust washer (LH)
19. Differential case (plain half)
20. Lockwire (32M, 36M)
21. Cap screw (32M, 36M)
22. Locknut (22M, 28M)
23. Bolt (22M, 28M)
24. Oil collector drum (32M, 36M)
25. Lockwasher (32M)
26. Oil collector drum cap screw (32M)
27. Differential bearing cone (LH)
28. Differential bearing cup (LH)
29. Differential bearing adjuster (LH)
30. Carrier gasket
31. Differential carrier oil feeder (32M, 36M)
32. Compression spring (32M, 36M)
33. Oil feeder bracket (32M, 36M)
34. Locating screw (32M, 36M)
35. Lockwasher (32M, 36M)
36. Machine screw (32M, 36M)
37. Nut (32M)
38. Lock (32M)
39. Adjusting screw (32M)
40. Ring gear thrust block (32M)
41. Differential oil lubricator (22M, 28M, 36M)
42. Cap screw (22M, 28M, 36M)
43. Lockwasher (22M, 28M, 36M)

Fig. 30 Disassembled view of differential carrier for Models 22M, 28M, 32M, 36M

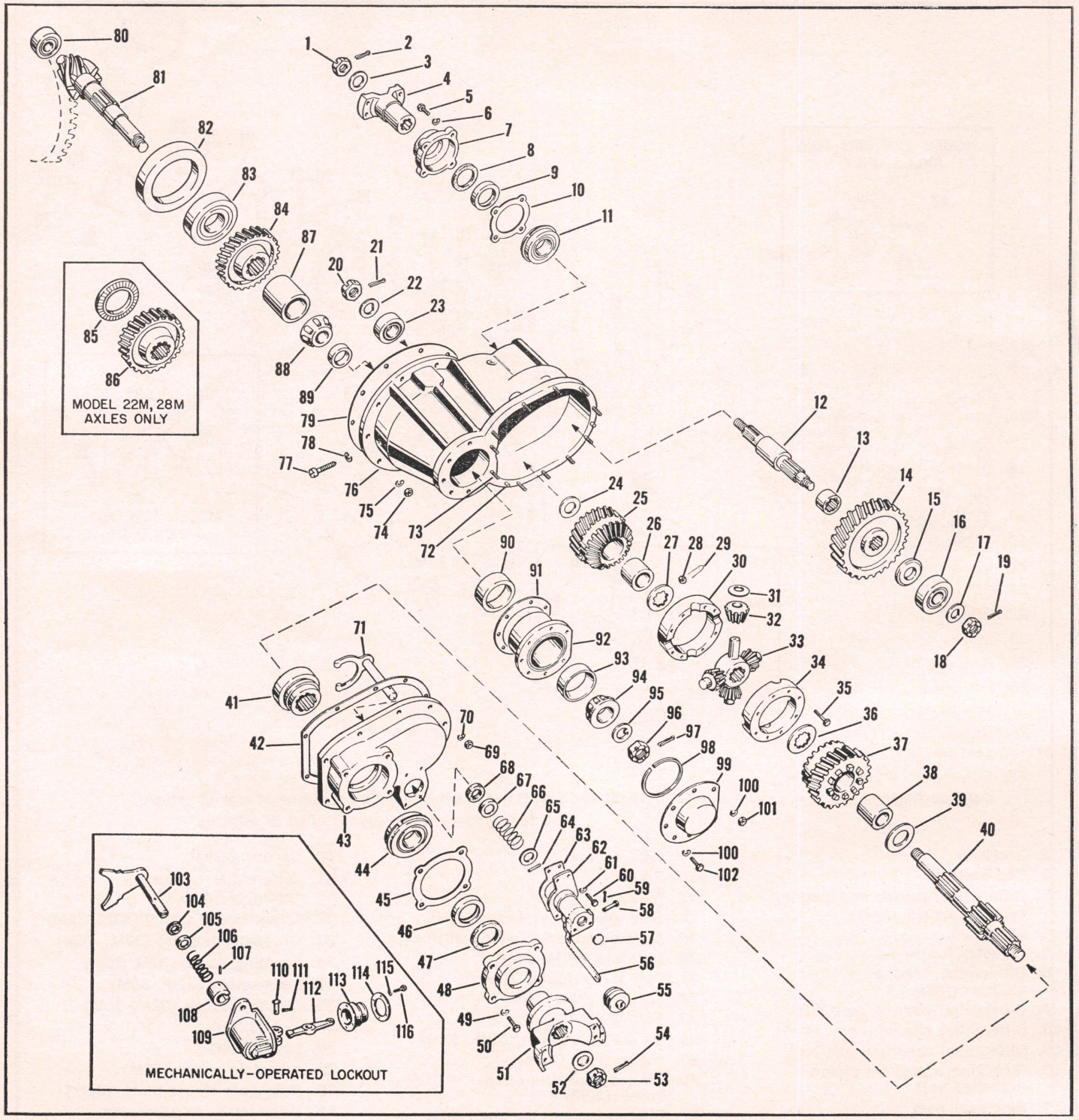

Fig. 31 Disassembled view of power divider for Models 22M, 28M, 32M

Reference to "FRONT" indicates the input companion flange side of power divider. "REAR" indicates the differential carrier side.

1. Flange nut
2. Cotter pin
3. Flat washer
4. Output companion flange
5. Cap screw
6. Lockwasher
7. Output shaft bearing cover (rear)
8. Felt seal
9. Oil seal
10. Bearing cover gasket
11. Output shaft bearing (rear)
12. Output shaft
13. Helical gear spacer
14. Output shaft helical gear
15. Front bearing spacer washer
16. Output shaft bearing (front)
17. "D" washer (32M)
18. Output shaft nut (front)
19. Cotter pin
20. Input shaft nut (inner)
21. Cotter pin
22. "D" washer
23. Input shaft bearing (rear)
24. Rear bearing spacer washer
25. Helical and differential side gear (rear)
26. Helical and differential side gear bushing (rear, short)
27. Differential spider splined washer (rear)
28. Nut
29. Lockwire
30. Inter-axle differential case (male half, rear)
31. Side pinion thrust washer
32. Side pinion
33. Spider
34. Inter-axle differential case (female half, front)
35. Bolt
36. Differential spider splined washer (front)
37. Helical and differential side gear (front)
38. Helical and differential side gear bushing (front, long)
39. Input shaft spacer washer
40. Input shaft
41. Sliding clutch
42. Power divider case cover gasket
43. Power divider case cover
44. Input shaft bearing (front)
45. Bearing cover gasket
46. Oil seal
47. Felt seal
48. Input shaft bearing cover (front)
49. Lockwasher
50. Cap screw
51. Input companion flange
52. Flat washer
53. Flange nut
54. Cotter pin
55. Shift lever boot
56. Shift lever
57. Expansion plug
58. Shift lever clevis pin
59. Cotter pin
60. Cap screw
61. Lockwasher
62. Shift lever bracket
63. Shift lever bracket gasket
64. Retainer washer pin
65. Retainer washer
66. Compression spring
67. Seal retainer
68. Felt seal
69. Stud nut
70. Lockwasher
71. Shift fork and push rod
72. Dowel pins
73. Stud
74. Stud nut
75. Lockwasher
76. Power divider case
77. Bearing sleeve set screw
78. Lockwasher
79. Power divider case gasket
80. Pinion pilot bearing
81. Drive pinion and ring gear (matched set)
82. Inner bearing sleeve
83. Pinion bearing (inner)
84. Helical gear (32M)
85. Helical gear seal (22M, 28M)
86. Helical gear (22M, 28M)
87. Pinion spacer (long)
88. Pinion bearing cone (inner)
89. Pinion bearing spacer
90. Pinion bearing cup (inner)
91. Shims
92. Pinion bearing cage
93. Pinion bearing cup (outer)
94. Pinion bearing cone (outer)
95. Tongued washer
96. Pinion nut
97. Cotter pin
98. Cork seal
99. Pinion bearing cage cover
100. Lockwasher
101. Stud nut
102. Cap screw

LEGEND FOR INSERT

(Mechanically-Operated Lockout)

103. Shift fork and push rod
104. Felt seal
105. Seal retainer
106. Compression spring
107. Rod bushing pin
108. Rod bushing
109. Shift lever bracket
110. Shift lever clevis pin
111. Cotter pin
112. Shift lever
113. Shift lever boot
114. Boot retainer
115. Lockwasher
116. Cap screw

12. Unfasten and remove power divider from carrier. Discard divider case gasket. *On Models 22M, 28M and 32M, the differential must be removed from the carrier before removing the power divider. On Model 36M, the power divider may be removed with the differential assembled in the carrier.*

36M Power Divider

The 36M power divider is the same as Model 42M axle. Refer to 42M instructions given further on.

22M, 28M, 32M Power Divider

Note: Reference to "front" indicates the input companion flange side of power divider. "Rear" indicates differential carrier side.

1. Mount power divider in a repair stand that will permit rotation of the entire assembly for easier handling during reassembly.
2. Remove input flange nut and flange.
3. Loosen (but do not remove) input shaft front bearing cover, Fig. 31.
4. Remove nuts securing power divider case cover to case. Then, using a suitable puller, grip front bearing cover with puller legs and position puller screw against input shaft. Pull bearing cover and case cover assembly from case.
5. Remove loosened output flange nut, flat washer and flange.
6. Remove output shaft rear bearing cover. Remove oil seal and felt seal from bearing cover.
7. Working at rear end of output shaft, drive shaft out of rear bearing. Lift output shaft assembly from divider case, then remove rear bearing from divider case.
8. Remove inner bearing sleeve set screw and lockwasher from divider case.
9. Remove loosened drive pinion nut and tongued washer. Drive pinion assembly out rear of divider case. Remove outer bearing cone from bearing cage.
10. Remove pinion bearing cage and shims from divider case. *Note quantity and size of shims under cage flange for easier adjustment during reassembly.* If replacement is necessary, remove bearing cups from cage.
11. Remove cotter pin from input shaft inner nut. Temporarily place companion flange on input shaft. Hold flange and remove nut and "D" washer from input shaft.
12. Place divider case in press with front helical gear supported, then press on rear of input shaft until shaft end clears rear bearing. Remove input shaft assembly from divider case, and also rear bearing.
13. To disassemble input shaft, lift rear bearing spacer washer and rear helical side gear off input shaft. Place input shaft in press with splined end down and spacer washer resting on press plate. Then press input shaft out of component parts.
14. To disassemble inter-axle differential, punch mark differential cases for location on reassembly. Cut lockwire and remove nuts and bolts holding cases together. Separate cases, then remove spider, side pinions and thrust washers.
15. To disassemble drive pinion, remove sleeve from inner bearing. Place drive pinion in arbor press with teeth down and disassemble in two steps as follows: (a) Place press support plates under helical gear; then press pinion out of bearing spacer, inner bearing cone, long pinion spacer and helical gear. (b) Place bearing puller plates between pinion teeth and inner race of inner bearing and press pinion out of inner bearing. Remove pilot bearing from pinion, using press or suitable puller.
16. To disassemble output shaft, remove cotter pin from output shaft front nut. Temporarily install companion flange on rear end of output shaft. Hold flange and loosen output shaft front nut. Remove nut and "D" washer ("D" washer used on 32M only). Place output shaft in press with splined end down and helical gear resting on press plate. Press shaft through front bearing, spacer washer and helical gear. Remove helical gear spacer.

Power Divider Case Cover

Note: Either vacuum-operated, air-operated or mechanically-operated lockout may be used on "M" Series axles. The air-operated lockout is covered further on. The following instructions are for vacuum-operated type. Mechanically-operated lockout varies slightly from the vacuum type (refer to insert in Fig. 31 for components).

1. Remove loosened capscrews, lockwashers and front bearing cover from divider case cover. Remove oil seal and felt seal from bearing cover.
2. Remove sliding clutch and input shaft front bearing from case cover.
3. Push back shift lever boot. Remove clevis pin and shift lever. Unfasten and remove shift lever bracket from case cover.
4. Depress compression spring. Then remove pin, retainer washer and compression spring from push rod.
5. Withdraw shift fork and push rod from case cover. Remove seal retainer and felt seal from case cover.

Axle Differential, Models 22M, 28M

1. Punch mark differential cases for correct location in reassembly. Remove locknuts and bolts and lift off plain differential case.
2. Remove differential components from ring gear side of case.
3. Remove capscrew, lockwasher and lubricator from flanged differential case.
4. Remove bearing cones from differential cases, using split-type bearing puller.
5. To remove ring gear from flanged differential case, drill off the flat head of rivets (on ring gear side) and drive out rivets.

32M Axle Differential

1. Punch mark differential cases for correct location in reassembly. Cut lockwire and remove differential case cap screws. Lift off plain differential case.
2. Remove differential components ring gear side of differential case.
3. Remove bearing cones from differential case, using split-type bearing puller. To remove ring gear from flanged differential case, drill off flat head of rivets (on ring gear side) and remove rivets.

36M Axle Differential

1. Punch mark differential cases for correct location in reassembly. Cut lockwire and remove differential case capscrews. Lift off oil collector drum and plain differential case.
2. Remove differential components from flanged differential case.
3. Remove capscrew, lockwasher and differential lubricator from flanged differential case.
4. Remove bearing cones from differential cases, using split-type bearing puller. To remove ring gear from flanged differential case, drill off flat head of rivets (on ring gear side) and remove rivets.

REASSEMBLE

36M Power Divider

Note: The power divider assembly for Model 36M is the same as 42M. Refer to 42M instructions further on for procedures.

22M, 28M, 32M Power Divider

Note: Partially reassemble shafts and case covers before reassembling power divider case.

Power Divider Case Cover (Vacuum Type)

Note: The following instructions are for the vacuum-type lockout. Mechanically operated lockout varies slightly from the vacuum type (refer to insert in Fig. 31). The air-operated type is covered further on. A disassembled view of the vacuum-type lockout is shown in Fig. 32.

1. Install input shaft front bearing in divider case cover.
2. Place felt seal and seal retainer in recess in case cover. Insert push rod through case cover opening. Place compression spring and retainer washer on push rod, compress spring and install retainer washer pin. Coat spring and retainer washer with grease.
3. Install shift lever bracket and gasket over push rod and install capscrews and lockwashers.
4. Position shift lever on bracket, engaging end of lever with slot in push rod. Install clevis and cotter pins to connect lever to bracket.
5. Place boot on shift lever and bracket.
6. Depress shift lever and position sliding clutch in case cover, engaging shift fork in clutch grooves.

Output Shaft, Fig. 33

1. Press helical gear spacer on front

end of output shaft. Then press helical gear, spacer washer and front bearing on output shaft.

2. Temporarily place companion flange on rear end of output shaft. Place output shaft in vise with rear end down, gripping flange in vise jaws.
3. Install "D" washer (32M only) on output shaft. Install and tighten output shaft front nut to correct torque. Install cotter pin.

Drive Pinion, Fig. 34

1. Press pilot bearing on drive pinion and stake in four places (see Fig. 12).
2. Lubricate and press inner bearing on drive pinion, positioning bevel side of bearing toward pinion teeth.
3. On Models 22M and 28M, install oil seal in helical gear, positioning segment springs inside. Press helical gear on drive pinion, placing seal towards inner bearing. On Model 32M, press helical gear on pinion with short hub toward inner bearing.
4. Press long spacer on pinion. Press inner bearing cone on pinion.
5. If removed, press bearing cups in pinion bearing cage.
6. Lubricate pinion bearings. Temporarily place bearing cage, spacer, outer bearing cone, tongued washer and nut on pinion. Tighten nut to correct torque. Rotate pinion bearing cage while tightening nut. Check pinion bearing preload adjustment as already explained at the beginning of this chapter.
7. With pinion bearings correctly adjusted, remove temporarily installed nut, tongued washer, outer bearing cone and bearing cage from pinion.

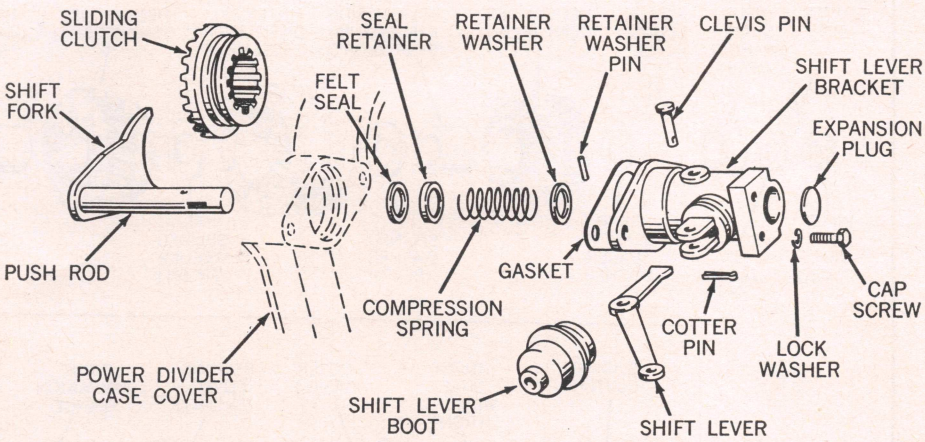

Fig. 32 Disassembled view of vacuum-operated lockout

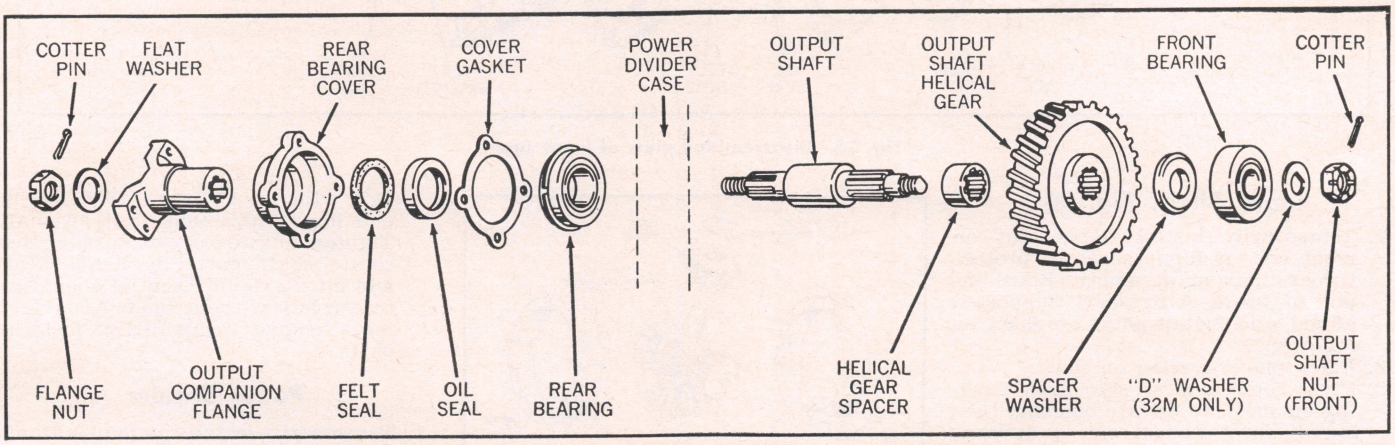

Fig. 33 Disassembled view of output shaft

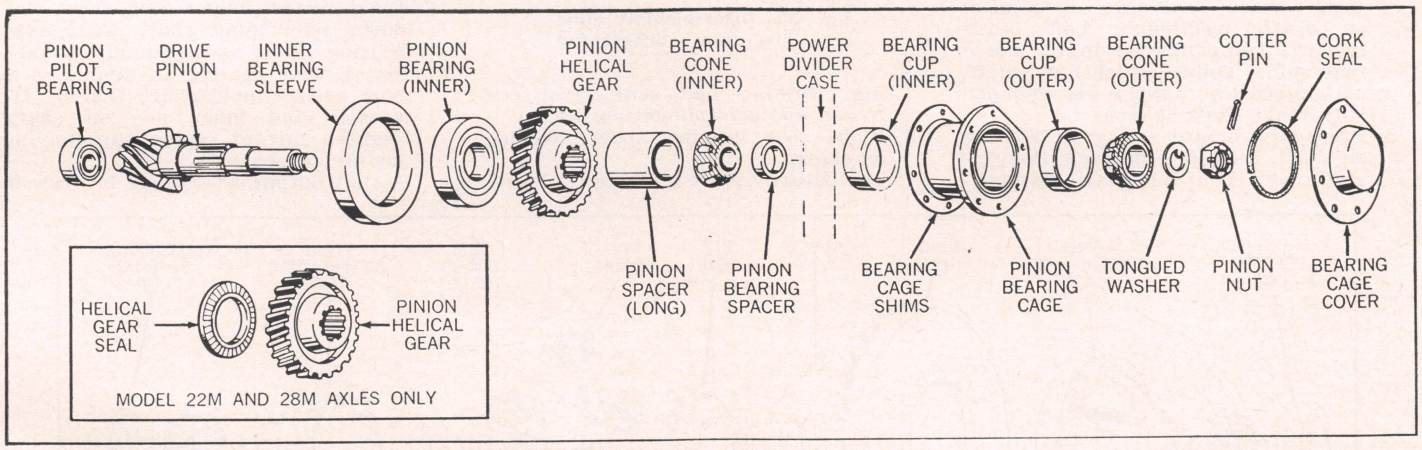

Fig. 34 Disassembled view of drive pinion

Inter-Axle Differential, Fig. 35

1. Lubricate parts during reassembly. Place side pinions and thrust washers on spider journals. Assemble spider assembly and case halves, aligning punch marks made during disassembly. Install bolts and nuts to secure case halves. Tighten nuts to correct torque and lockwire.

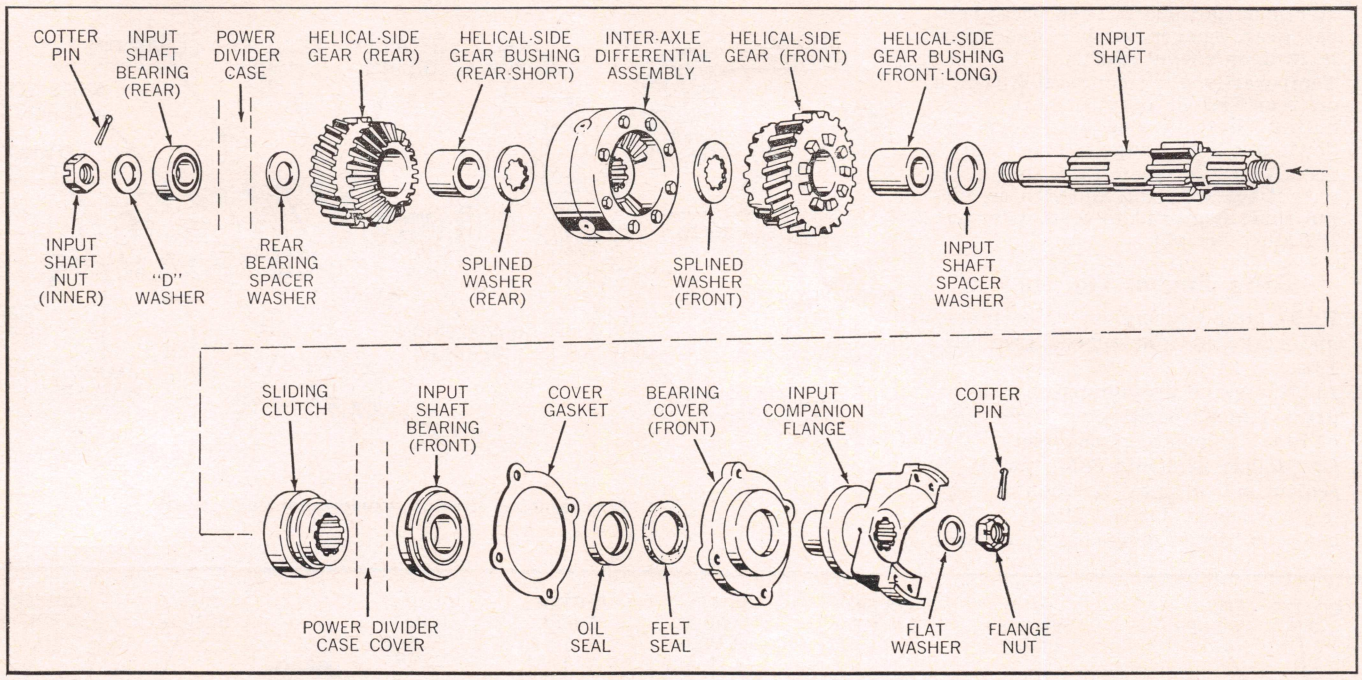

Fig. 36 Disassembled view of input shaft

Input Shaft, Fig. 36

1. Temporarily install flange nut on front end of input shaft to protect threads during assembly. Place input in press, with shaft supported at nut and install parts on shaft as follows:
2. Place spacer washer on shaft.
3. Press front helical side gear bushing on shaft. Lubricate bushing, then install front helical side gear over bushing. *Bushing and gear must rest firmly against spacer washer.*
4. Place front spider splined washer on shaft. Place inter-axle differential on shaft, positioning bolt heads toward companion flange. Place rear spider splined washer on shaft, *making certain splines are engaged with input shaft splines.*
5. Press rear helical side gear bushing on shaft. Lubricate bushing, then install rear helical side gear over bushing. *Bushing and gear must rest firmly against splined washer.*
6. Place rear bearing spacer washer on shaft.
7. Temporarily place a "dummy sleeve" (1½" I.D. x 1" long), "D" washer and input shaft inner nut on shaft. Tighten nut to correct torque, then rotate shaft parts by hand. Gears and inter-axle differential should rotate freely without bind. After testing, remove temporarily installed parts.

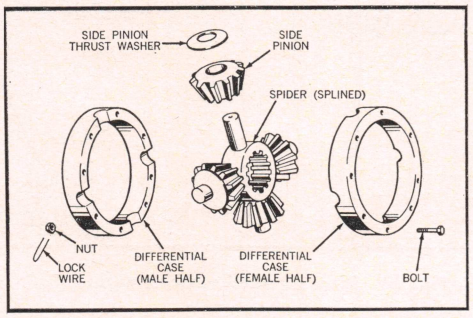

Fig. 35 Disassembled view of inter-axle differential

Power Divider

1. Temporarily install companion flange on input shaft. Place input shaft in vise, with front end down and gripping flange in vise jaws.
2. Place power divider case, front side down, over input shaft. With rear bearing spacer washer on input shaft, install rear bearing in divider case bore and on input shaft. Install "D" washer and inner nut on shaft. Tighten nut to correct torque and install cotter pin.

Install output shaft rear bearing in

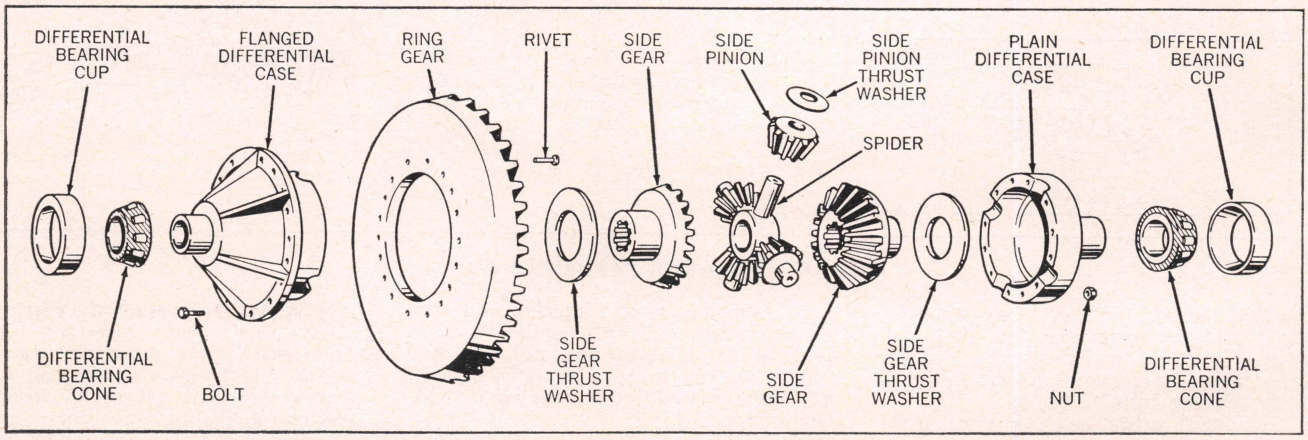

Fig. 37 Disassembled view of axle differential for Models 22M, 28M

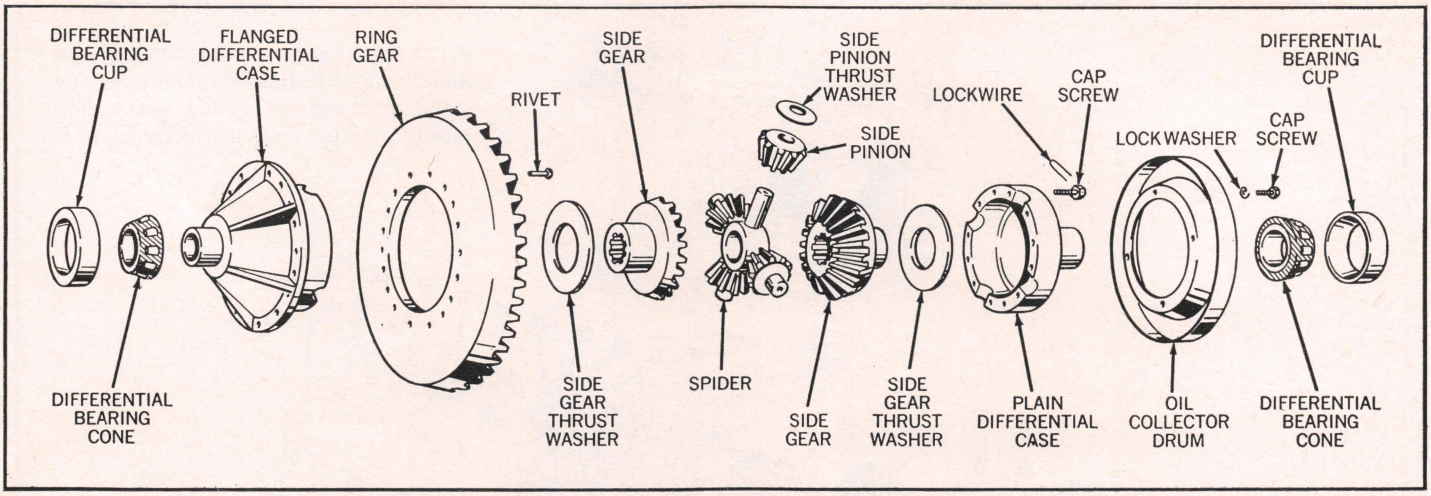

Fig. 38 Disassembled view of axle differential for Models 32M, 36M

divider case. Lubricate bearing. With new felt seal and oil seal installed in rear bearing cover, install gasket and bearing cover on divider case. Install cover capscrews and lockwashers.

3. Remove divider case and input shaft assembly from vise.
4. Position divider case with front side up. Place output shaft in case, taking care not to damage rear bearing oil seal.
5. Place gasket and case cover on divider case. Make certain sliding clutch engages splines of input shaft. Fasten cover to case and tighten stud nuts to correct torque.
6. Install felt seal and oil seal in input shaft front bearing cover. Place gasket and bearing cover on case cover. Install capscrews and lockwashers but do not tighten until companion flange is installed.
7. Install companion flange, flat washer and nut. Tighten nut to correct torque and insert cotter pin. Now tighten front bearing cover capscrews to correct torque.
8. Install same quantity and size shims that were removed in disassembly on pinion bearing cage. Place shims and cage in divider case.
9. Insert drive pinion through opposite side of divider case until inner bearing cone is seated in inner bearing cup. Then place outer bearing cone, tongued washer and nut on drive pinion. Tighten nut to correct torque and insert cotter pin.
10. Install new cork seal in cage groove. Install cage cover and tighten nuts and capscrews to correct torque.
11. Insert bearing sleeve in divider case and over pinion inner bearing. Align sleeve hole with hole in case, then install set screw and lockwasher.
12. Loosen capscrews holding output shaft bearing cover. Install companion flange, flat washer and nut on output shaft. Tighten nut to correct torque and insert cotter pin. Tighten bearing cover capscrews to correct torque.

22M, 28M Axle Differential, Fig. 37

1. Rivet (cold) ring gear to flanged differential case, placing flat side head of rivets on ring gear side. Compress rivets to 34-38 tons on Model 22M or 40-42 tons on 28M.
2. Press bearing cones on differential cases. If removed, install oil lubricator in flanged differential case and secure with capscrew and lockwasher.
3. Lubricate parts during assembly. Place thrust washer and right-hand side gear in flanged differential case. Assemble side pinions and thrust washers to spider, then place this assembly on flanged differential case. Place left-hand side gear and thrust washer on side pinions.
4. Tap plain differential into place, aligning previously made punch marks. Draw case halves together with four bolts and lock nuts. Check assembly for free rotation. Install remaining bolts and locknuts and tighten all nuts to correct torque.

32M Axle Differential, Fig. 38

1. Rivet ring gear to flanged differential case, compressing rivets to 47-50 tons.
2. Press bearing cones on differential case. Lubricate parts during assembly.
3. Assemble differential parts in flanged differential case.
4. Tap plain differential case into place, aligning previously made punch marks. Do not install oil collector drum at this time, but assemble drum to case after differential is installed in carrier.
5. Install four large tapped head capscrews, equally spaced, to draw case halves together. Check assembly for free rotation. Install eight remaining capscrews and tighten all to correct torque. Lock with wire.

36M Axle Differential, Fig. 38

1. Rivet ring gear to flanged differential case, compressing to 39-41 tons.
2. Press bearing cones on differential cases. If removed, install oil lubricator in flanged differential case.
3. Assemble differential parts in flanged differential case. Then tap plain differential case half into place, aligning previously made punch marks.
4. Place oil collector drum on plain differential case. Install four capscrews to draw case halves together. Check assembly for free rotation. Install remaining capscrews and tighten all to correct torque.

Final Assembly

1. Using a new gasket, place power divider on differential carrier. Install and tighten stud nuts to correct torque.
2. On Models 22M, 28M and 36M, install differential in carrier as follows: Lubricate differential bearings. Place differential in carrier and install differential bearing cups, adjusters and caps, aligning punch marks previously made on caps. Install and finger-tighten bearing capscrews. Tighten adjusters to correctly seat bearings. Adjust ring gear and drive pinion as per instructions at the beginning of this chapter. When correctly adjusted, tighten bearing capscrews to correct torque. Install cotter pins to secure adjuster locks and lock capscrews with wire.
3. On Model 32M, install differential in in carrier as follows:
   (a) Lubricate differential bearings. Place oil collector drum on left-hand side of differential, but do not install capscrews. Place differential and drum in carrier and install bearing cups, adjusters and caps. Install and finger - tighten bearing cap screws.
   (b) Secure oil collector drum to plain differential with four capscrews and lockwashers.
   (c) Tighten bearing adjusters to seat bearings. Adjust ring gear and pinion as described at the beginning of this chapter.
   (d) With ring gear and pinion correctly adjusted, tighten bearing capscrews to correct torque. Install cotter pins to secure ad-

RH — Right-hand LH — Left-hand
Right and Left Hand is determined by standing at rear of vehicle and facing rear of axle (as installed in vehicle)

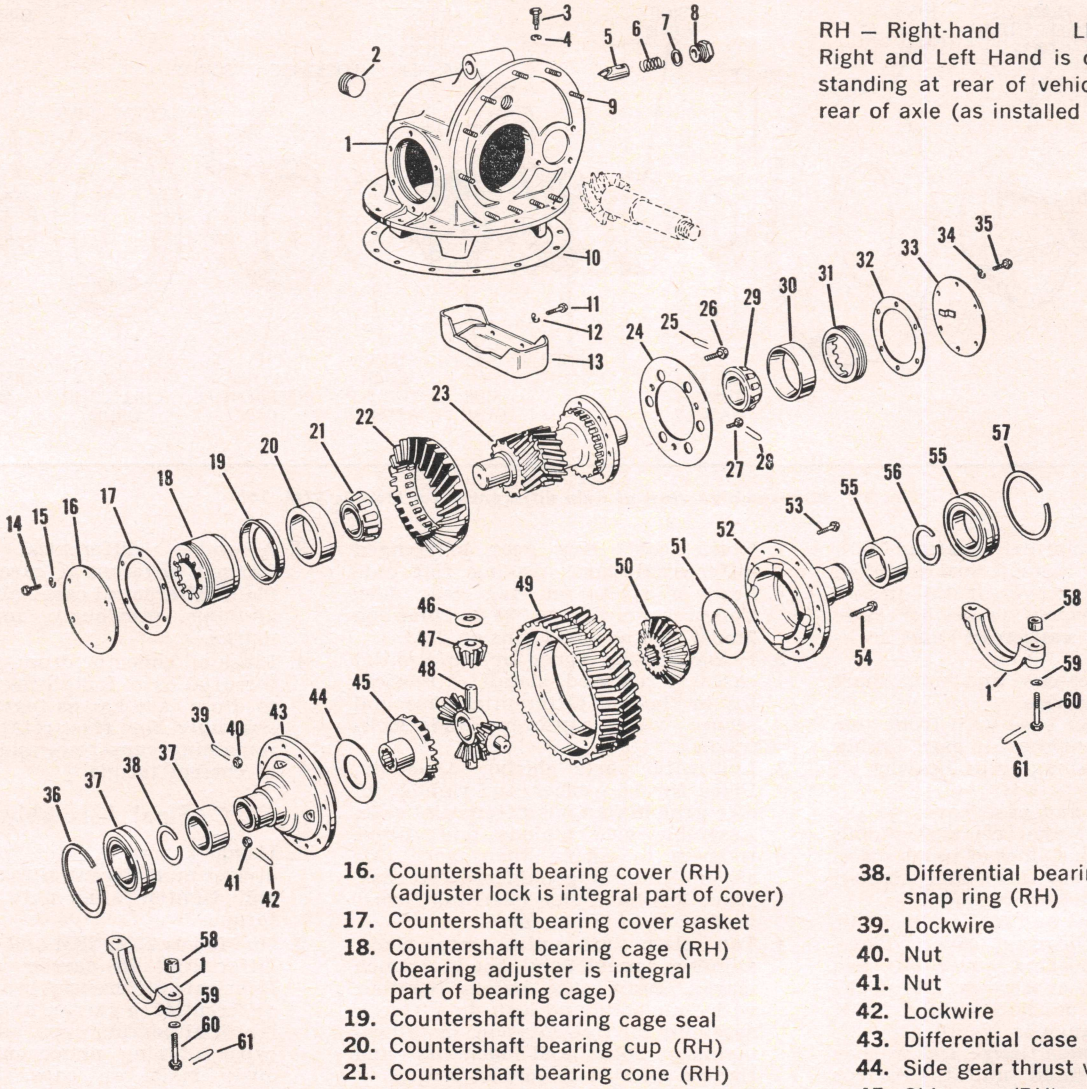

1. Differential carrier and bearing caps (matched parts)
2. Pipe plug
3. Cap screw
4. Lockwasher
5. Oil distributor
6. Oil distributor spring
7. Oil distributor plug gasket
8. Oil distributor plug
9. Carrier stud
10. Carrier gasket
11. Cap screw
12. Lockwasher
13. Oil reservoir
14. Cap screw
15. Lockwasher
16. Countershaft bearing cover (RH) (adjuster lock is integral part of cover)
17. Countershaft bearing cover gasket
18. Countershaft bearing cage (RH) (bearing adjuster is integral part of bearing cage)
19. Countershaft bearing cage seal
20. Countershaft bearing cup (RH)
21. Countershaft bearing cone (RH)
22. Ring gear and drive pinion (matched set)
23. Countershaft (herringbone pinion is integral part of countershaft)
24. Oil collector disc
25. Lockwire
26. Cap screw
27. Cap screw
28. Lockwire
29. Countershaft bearing cone (LH)
30. Countershaft bearing cup (LH)
31. Countershaft bearing adjuster (LH)
32. Countershaft bearing cover gasket
33. Countershaft bearing cover (LH) (adjuster lock is integral part of cover)
34. Lockwasher
35. Cap screw
36. Differential bearing outer race snap ring (RH)
37. Differential bearing inner and outer race (RH) (matched parts)
38. Differential bearing inner race snap ring (RH)
39. Lockwire
40. Nut
41. Nut
42. Lockwire
43. Differential case (RH)
44. Side gear thrust washer (RH)
45. Side gear (RH)
46. Side pinion thrust washer
47. Side pinion
48. Spider
49. Herringbone gear
50. Side gear (LH)
51. Side gear thrust washer (LH)
52. Differential case (LH)
53. Bolt
54. Bolt
55. Differential bearing inner and outer race (LH) (matched parts)
56. Differential bearing inner race snap ring (LH)
57. Differential bearing outer race snap ring (LH)
58. Dowel bushing
59. Flat washer
60. Cap screw
61. Lockwire

Fig. 39 Disassembled view of differential carrier for Model 42M

juster locks and lockwire capscrews.

(e) Tighten thrust block adjusting screw to position thrust block against ring gear. Loosen adjusting screw (⅛ to ¼ turn) to obtain .010-.015″ clearance between thrust block and ring gear. Tighten nut and bend ear of lock to secure adjustment.

Install Assembly In Axle Housing

1. Using a new gasket, install differential and power divider assembly in axle housing. Install capscrews or stud nuts and lockwashers. Tighten screws or nuts to correct torque.
2. Connect lockout shift lever.
3. Install axle shafts and connect propeller shafts.
4. Fill axle with correct lubricant.

MODEL 42M

Rearward Rear Axle

Instructions for the rearward rear axle are essentially the same as the forward rear axle except for removal of the power divider and drive pinion.

The rearward rear axle is not equipped with a power divider. The drive pinion for the rearward rear axle is mounted in a bearing cage at the front side of the differential carrier. The drive pinion can be removed and installed as a complete assembly, consisting of pinion, bearings, cage and companion flange.

Disassemble and reassembly of the differential assembly and countershaft are the same as instructions for the forward rear axle which follows:

DISASSEMBLE FORWARD REAR AXLE

1. Drain lubricant. Disconnect propeller shafts and remove axle shafts.
2. Disconnect lockout shift lever.
3. Unfasten and remove carrier and power divider from axle housing. *If preliminary inspection reveals that ring gear and drive pinion are satisfactory, check backlash with dial indicator and take a tooth contact pattern for reference and easier adjustment during reassembly.*
4. Remove pinion cage cover. Remove and discard cork seal. Hold input and output companion flanges and loosen (but do not remove) pinion nut.
5. Hold input flange and loosen (but do not remove) flange nut.
6. Hold output flange and loosen (but do not remove) flange nut.
7. Unfasten and lift power divider from differential carrier.

Differential Carrier, Fig. 39

1. Punch mark differential bearing caps and carrier for correct location during reassembly.
2. Remove bearing caps and lift differential out of carrier. Remove outer bearing races from differential cases.
3. Unscrew oil distributor plug, spring and distributor.
4. Punch mark countershaft bearing covers and carrier for correct location during reassembly. Remove covers from both sides.
5. Punch mark countershaft bearing cage (right-hand), bearing adjuster (left-hand) and differential carrier for correct location on reassembly. Then remove bearing cage and adjuster from carrier. Remove cage seal.
6. Remove oil reservoir from carrier.
7. Position herringbone pinion halfway through right-hand bearing cage opening, then tilt countershaft to position ring gear at top and lift out countershaft.

Differential

1. If match marks are not present, make marks to assure correct position of each case half in reassembly.
2. Unfasten and separate herringbone gear and case halves.
3. Lift herringbone gear and left-hand case off right-hand case and remove differential components.
4. Place side gear in vise and drive left-hand case from herringbone gear and case support.
5. Remove snap rings from case halves.
6. Remove bearing inner race from case halves using a split-type bearing puller.

Countershaft

1. Remove capscrews and oil collector disc.
2. If match marks are not present, make marks to assure correct position of ring gear on countershaft flange.
3. Remove ring gear from countershaft.
4. Remove bearing cones from countershaft using a split-type bearing puller.

Power Divider, Fig. 40

1. Remove input flange. Loosen (do not remove) capscrew on input shaft front bearing cover.
2. Remove divider cover to case stud nuts. Using suitable bearing puller, grip front bearing cover with puller legs and puller screw against input shaft. Pull bearing cover and case cover from case.
3. Remove output flange.
4. Working at rear end of output shaft, drive shaft end out of rear bearing. Lift output shaft from divider case, then remove bearing from case.
5. Remove inner bearing sleeve set screw from divider case.
6. Remove loosened pinion nut and tongued washer. Drive pinion out rear of divider case. Remove outer bearing cone from bearing cage.
7. Remove pinion bearing cage and shims from front side of divider case. *Note size and quantity of shims removed for easier adjustment in reassembly.* If replacement is necessary remove bearing cups from cage.
8. Remove input shaft assembly. This can easily be accomplished by temporarily installing companion flange and nut on end of shaft. Use flange to lift assembly from case.

Input Shaft & Inter-Axle Differential

1. Place input shaft in vise, gripping companion flange. Loosen and remove inner nut and tongued washer.
2. Place input shaft in press, with front helical side gear down and input shaft front spacer washer resting on press plates. Press shaft out of component parts.
3. Punch mark differential cases for correct location in reassembly. Cut lockwire and remove bolts holding cases together. Separate case halves and remove differential components.

Drive Pinion

1. On Model 36M, remove sleeve from inner bearing. Place pinion in press with pinion teeth down. Then first press pinion out of bearing spacer, inner bearing cone, long spacer and helical gear. Then press pinion out of inner bearing.
2. On Model 42M, remove pinion bearing spacer. Then first press pinion out of inner bearing cone, long spacer, helical gear and inner bearing sleeve. Then press pinion out of inner bearing spacer and inner bearing.

Output Shaft

1. Remove cotter pin from output shaft front nut. Temporarily place companion flange on shaft. Then remove front nut, tongued washer and flange.
2. Place output shaft in press with rear end of shaft down and helical gear resting on press plates. Press shaft out of front bearing, spacer washer and helical gear. Remove helical gear spacer.

Divider Case Cover (Air-Operated Lockout)

Either air-operated or mechanically-operated lockout may be used on 36M and 42M axles. Refer to insert in Fig. 31 for components of mechanically-operated lockout. The following instructions are for air-operated lockout.

1. Remove cover from shift cylinder body. Discard grommets. Remove nut, flat washer and grommet from push rod.
2. Remove shift cylinder body from case cover.
3. Remove compression spring from push rod. Remove sliding clutch and shift fork from case cover.
4. Remove front bearing cover and shims. Note size and quantity of shims removed for easier adjustment during reassembly. Remove oil seal and felt seal from bearing cover. Remove input shaft bearing from case cover.

REASSEMBLE

Divider Case Cover (Air-Operated), Fig. 41

1. Press front input shaft bearing in divider case cover.

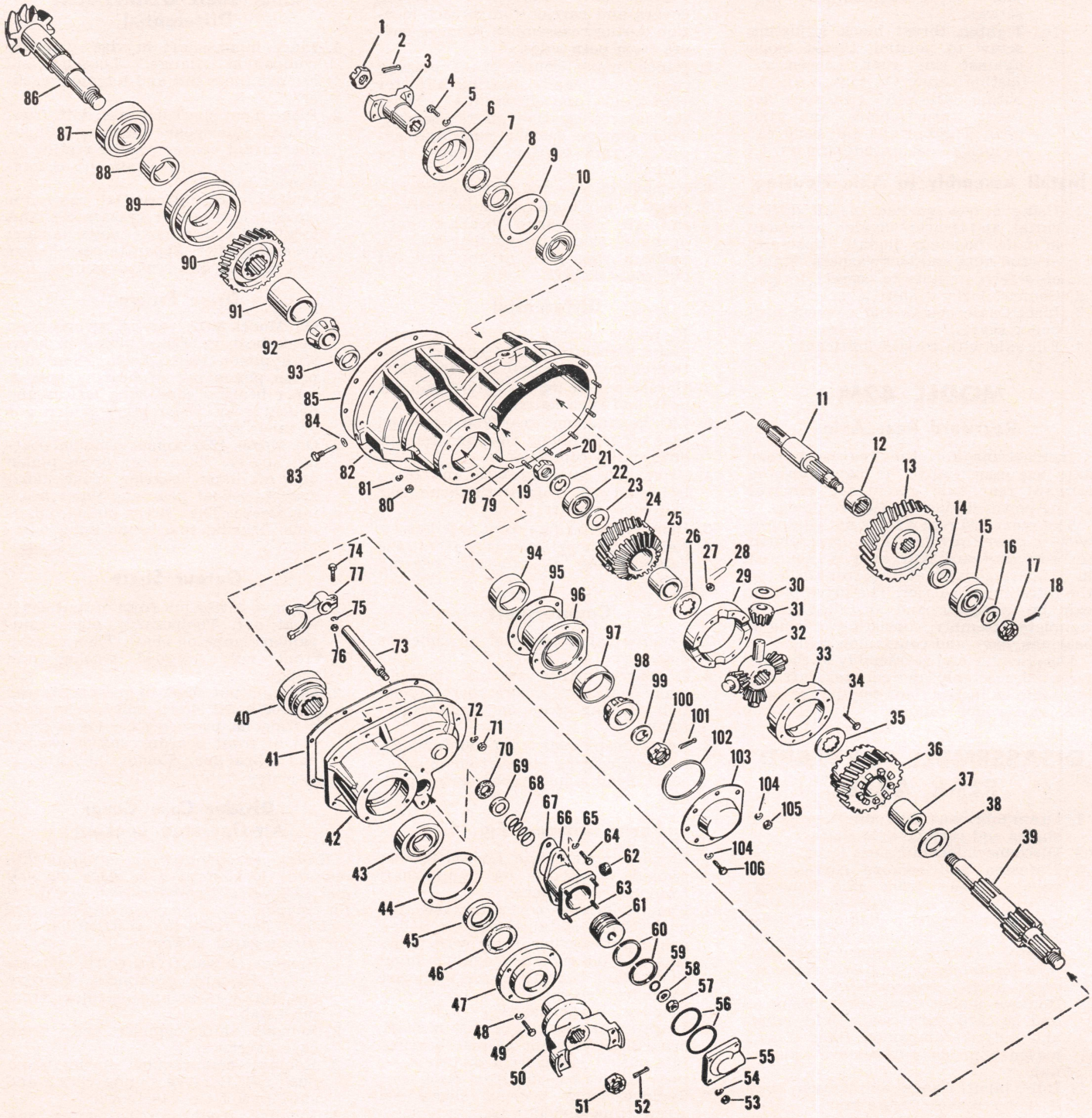

Fig. 40 Disassembled view of power divider for Models 36M, 42M

2. Place felt seal and seal retainer in recess in case cover. Assemble push rod to shift fork and secure with nut, bolt and lockwasher.
3. Assemble shift fork and sliding clutch to case cover as follows: Partially insert push rod in case cover, engaging sliding clutch with shift fork, then push this assembly into correct mounting position in case cover.
4. Place compression spring, gasket and shift cylinder body over push rod and onto case cover. Secure body with capscrews and lockwashers. *Piston felt oilers should be soaked in SAE-30 oil for one hour prior to assembly.*
5. Install felt oilers on piston and insert piston assembly in body and on push rod. Place grommet on push rod, then install flat washer and nut.
6. Install grommets on cylinder cover, then install cover, nuts and lockwashers on shift cylinder body.

Output Shaft, Fig. 42

1. Press helical gear spacer on front end of shaft. Then press helical gear, bearing spacer washer and front bearing on shaft.
2. Temporarily place companion flange on rear end of shaft. Place shaft in

Reference to "FRONT" indicates the input companion flange side of power divider. "REAR" indicates the differential carrier side.

1. Flange nut
2. Cotter pin
3. Output companion flange
4. Cap screw
5. Lockwasher
6. Output shaft bearing cover (rear)
7. Felt seal
8. Oil seal
9. Bearing cover shim
10. Output shaft bearing (rear)
11. Output shaft
12. Helical gear spacer
13. Output shaft helical gear
14. Front bearing spacer washer
15. Output shaft bearing (front)
16. Tongued washer
17. Output shaft nut (front)
18. Cotter pin
19. Input shaft nut (inner)
20. Cotter pin
21. Tongued washer
22. Input shaft bearing (rear)
23. Rear bearing spacer washer
24. Helical and differential side gear (rear)
25. Helical and differential side gear bushing (rear, short)
26. Differential spider splined washer (rear)
27. Nut
28. Lockwire
29. Inter-axle differential case (male half, rear)
30. Side pinion thrust washer
31. Side pinion
32. Spider
33. Inter-axle differential case (female half, front)
34. Bolt
35. Differential spider splined washer (front)
36. Helical and differential side gear (front)
37. Helical and differential side gear bushing (front, long)
38. Input shaft spacer washer
39. Input shaft
40. Sliding clutch
41. Power divider case cover gasket
42. Power divider case cover
43. Input shaft bearing (front)
44. Bearing cover shim
45. Oil seal
46. Felt seal
47. Input shaft bearing cover (front)
48. Lockwasher
49. Cap screw
50. Input companion flange
51. Flange nut
52. Cotter pin
53. Stud nut
54. Lockwasher
55. Shift cylinder cover
56. Shift cylinder cover grommets
57. Push rod nut
58. Flat washer
59. Push rod grommet
60. Piston felt oilers
61. Shift cylinder piston
62. Shift cylinder body filter
63. Cover stud
64. Cap screw
65. Lockwasher
66. Shift cylinder body
67. Shift cylinder body gasket
68. Compression spring
69. Seal retainer
70. Felt seal
71. Stud nut
72. Lockwasher
73. Push rod
74. Bolt
75. Lockwasher
76. Nut
77. Shift fork
78. Dowel
79. Stud
80. Stud nut
81. Lockwasher
82. Power divider case
83. Bearing sleeve set screw
84. Lockwasher
85. Power divider case gasket
86. Drive pinion and ring gear (matched set)
87. Pinion bearing (inner)
88. Pinion inner bearing spacer (42M only)
89. Inner bearing sleeve
90. Helical gear
91. Pinion spacer (long)
92. Pinion bearing cone (inner)
93. Pinion bearing spacer
94. Pinion bearing cup (inner)
95. Shims
96. Pinion bearing cage
97. Pinion bearing cup (outer)
98. Pinion bearing cone (outer)
99. Tongued washer
100. Pinion nut
101. Cotter pin
102. Cork seal
103. Pinion bearing cage cover
104. Lockwasher
105. Stud nut
106. Cap screw

vise with rear end down, gripping flange in vise jaws.

3. Install tongued washer on shaft. Install and tighten shaft front nut to correct torque. Install cotter pin.

Drive Pinion, Fig. 43

1. Lubricate and press inner bearing on pinion, positioning bevel side of bearing toward pinion teeth.
2. On Model 42M, press inner bearing spacer and inner bearing sleeve on pinion. *On Model 36M, install inner bearing sleeve when pinion is assembled to power divider case (spacer is not used).*
3. Press helical gear in pinion splines, making certain long hub is against inner bearing spacer (42M). On Model 36M, long hub is against inner bearing.
4. Press long pinion spacer and inner bearing cone on pinion.
5. If removed, press pinion bearing cups in bearing cage.
6. Lubricate pinion bearings. Temporarily place bearing cage, bearing spacer, outer bearing cone, tongued washer and nut on pinion. Tighten nut to correct torque, rotating bearing cage while tightening nut. Check pinion bearing preload as instructed at the beginning of this chapter.
7. With pinion bearing preload correctly adjusted, remove temporarily installed parts from pinion.

Inter-Axle Differential, Fig. 44

Lubricate parts during reassembly.

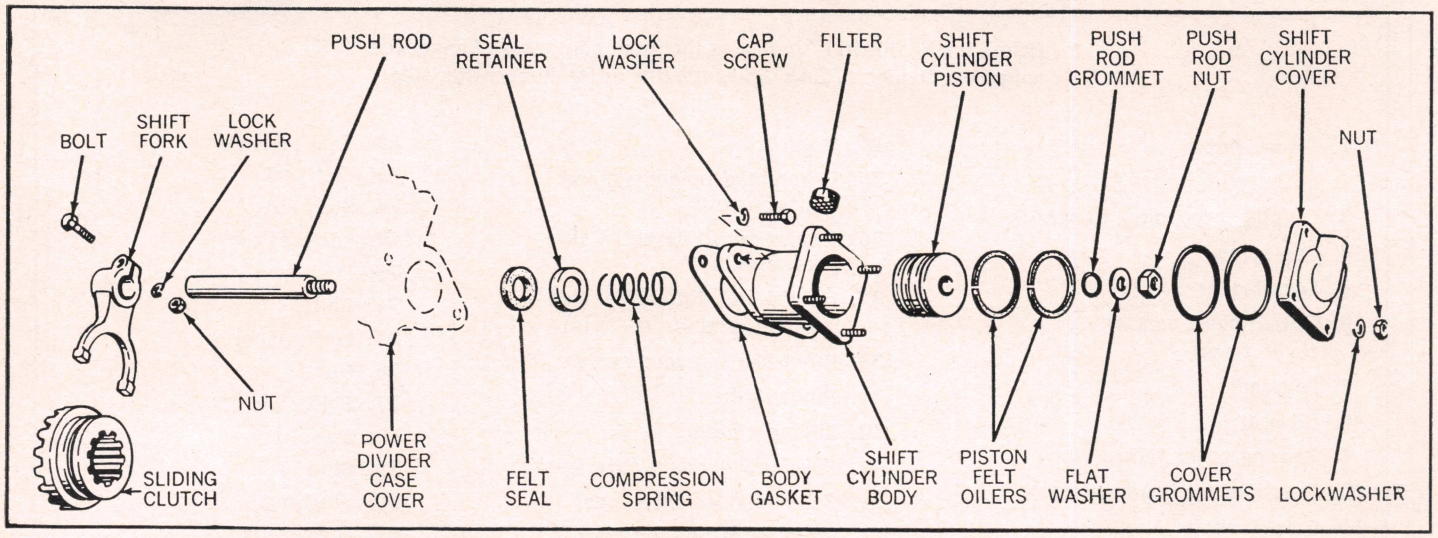

Fig. 41 Disassembled view of air-operated lockout mechanism

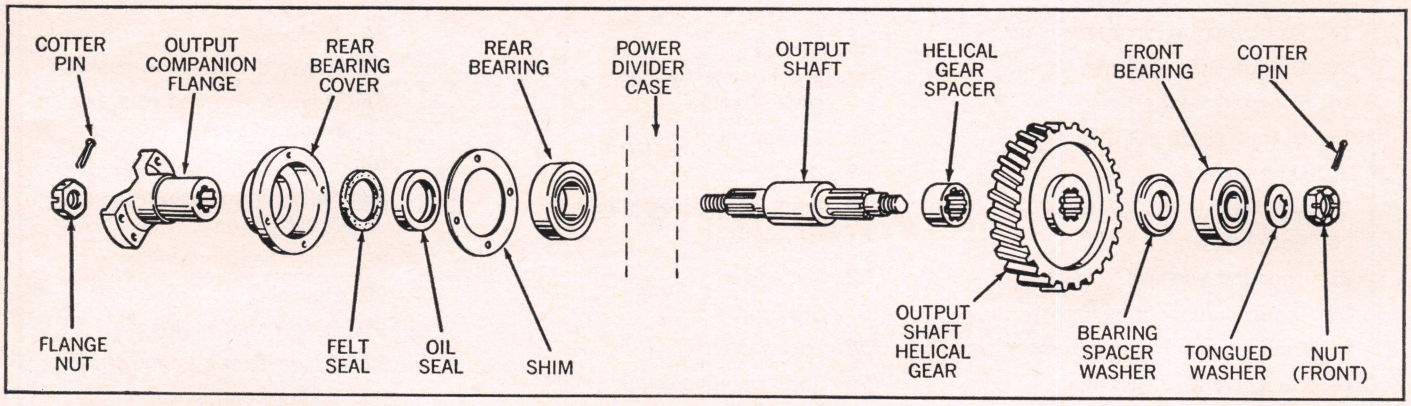

Fig. 42 Disassembled view of output shaft for Models 36M, 42M

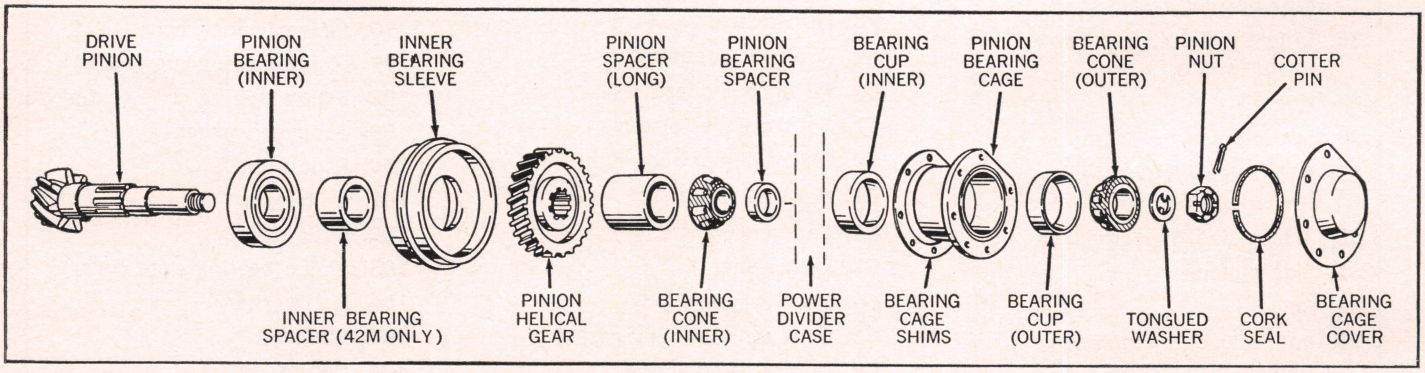

Fig. 43 Disassembled view of drive pinion for Models 36M, 42M

Place side pinions and thrust washers on spider journals. Assemble spider assembly and case halves, aligning previously made punch marks. Secure case halves with bolts and nuts, tightening nuts to correct torque. Lock nuts with wire.

Input Shaft, Fig. 45

1. Temporarily install flange nut on front end of shaft to protect threads during assembly. Place shaft in a press, with shaft supported at nut and install parts on shaft as follows:
2. Place spacer washer on shaft. Press long helical side gear bushing on shaft. Lubricate bushing, then install front helical side gear on bushing. *Bushing and gear must rest firmly against spacer washer.*
3. Place front spider splined washer on shaft. Place inter-axle differential on shaft, positioning bolt heads toward companion flange. Place rear spider splined washer on shaft. *Make certain washer splines are engaged with shaft splines.*
4. Press short helical side gear bushing on shaft. Lubricate bushing, then install rear helical side gear over bushing. *Bushing and gear must rest firmly against splined washer.*
5. Place rear bearing spacer washer on shaft. Temporarily place a dummy sleeve (1½" I.D. x 1" long), tongued washer and shaft inner nut on shaft. Tighten nut to correct torque. Rotate shaft parts by hand; they should rotate freely without binding.
6. After testing assembly for free

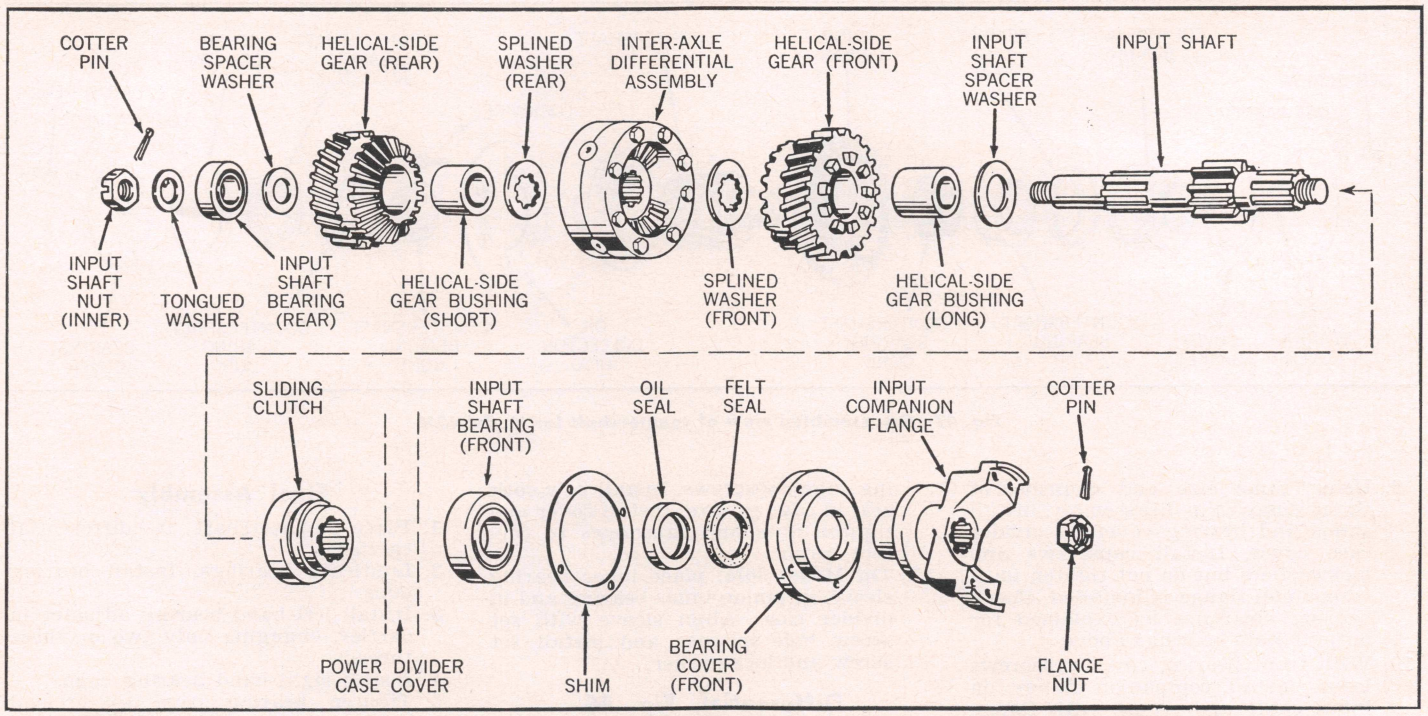

Fig. 45 Disassembled view of input shaft for Models 36M, 42M

movement, remove temporarily installed parts. Then press rear bearing on shaft and install tongued washer and inner nut. Tighten nut to correct torque and install cotter pin.

Power Divider, Fig. 40

1. Position divider case with rear side up.
2. Lubricate and install output shaft rear bearing in divider case.
3. Install felt seal and oil seal in output shaft rear bearing cover. Using same size and quantity of shims removed at disassembly, install shims and bearing cover on divider case. Install (but do not tighten) cover capscrews and lockwashers until companion flange is installed.
4. *To check bearing clearance to determine thickness of shims required, install bearing cover on divider case without shims. Install and finger-tighten cover capscrews. Then, using a feeler gauge, measure clearance between bearing cover and divider case. This clearance measurement plus 003" would equal the thickness of shims required for correct bearing clearance.*
5. Rotate divider case to position front side up. Insert assembled input shaft, engaging rear bearing in bore of divider case.
6. Insert assembled output shaft in divider case, inserting end of shaft through rear bearing and taking care not to damage oil seal.
7. Using new case cover gasket, place divider case cover on divider case, engaging sliding clutch splines with input shaft splines. Install stud nuts and lockwashers. Tighten stud nuts to correct torque.
8. Install felt seal and oil seal in input shaft front bearing cover.

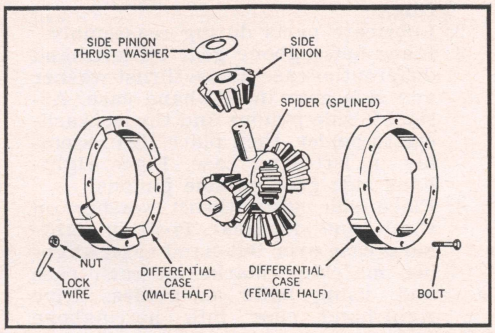

Fig. 44 Disassembled view of inter-axle differential for Models 36M, 42M

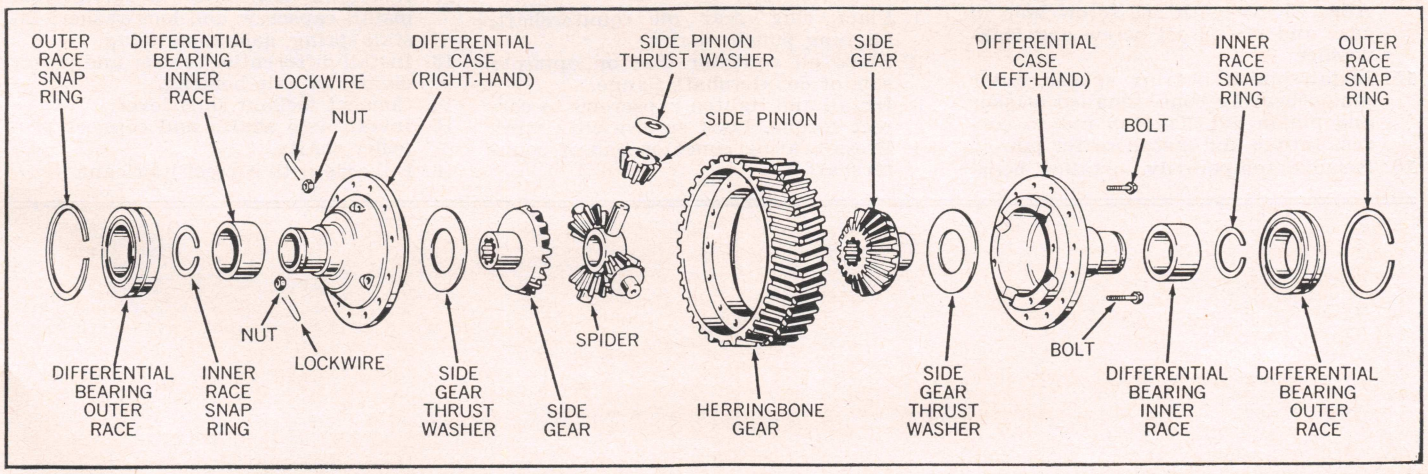

Fig. 46 Disassembled view of axle differential for Model 42M

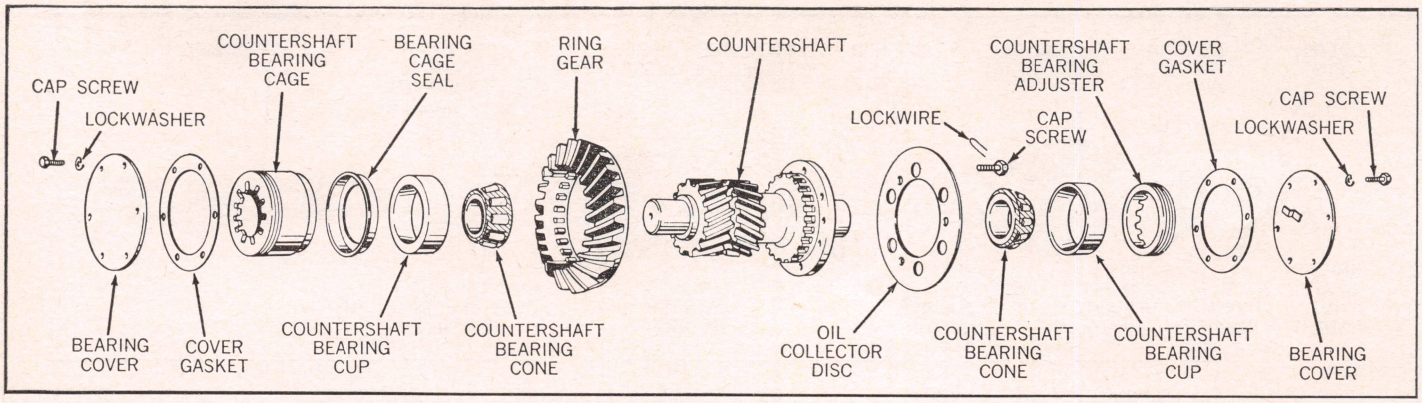

Fig. 47 Disassembled view of countershaft for Model 42M

9. Using same size and quantity of shims removed in disassembly, install shims and bearing cover on divider case cover. Install capscrews and lockwashers but do not tighten until companion flange is installed. Check bearing clearance as explained for output shaft bearings above.
10. With front bearing cover capscrews loose, install companion flange on input shaft and secure with flange nut. Tighten nut to correct torque and install cotter pin. Tighten front bearing cover capscrews to correct torque.
11. Install same size and quantity of shims removed at disassembly on pinion bearing cage, then install cage on divider case. Temporarily install cage capscrews to retain cage during pinion installation.
12. With divider case rear side up, and with output shaft rear bearing cover capscrews loose, install companion flange on output shaft, taking care not to damage oil seal. Install and tighten flange nut to correct torque and install cotter pin. Tighten rear bearing cover capscrews to correct torque.
13. Lubricate pinion bearings. Install partially assembled pinion in divider case.
14. On Model 42M, position inner bearing sleeve in case bore and end of pinion through inner bearing cup. Align sleeve with set screw hole in case and install set screw and lockwasher.
15. Install pinion bearing spacer, outer pinion bearing cone, tongued washer and pinion nut. Tighten nut to correct torque and install cotter pin.
16. Remove temporarily installed bearing cage capscrews. Install new cork seal in cage groove. Install cover and tighten nuts and capscrews to correct torque.
17. On Model 36M, place inner bearing sleeve on pinion inner bearing and in divider case. Align sleeve with set screw hole in case and install set screw and lockwasher.

Differential, Fig. 46

1. Press bearing inner races on differential case halves and install snap rings.
2. Lubricate parts during reassembly.
3. Place herringbone gear on left-hand differential case. Place thrust washer and side gear in left-hand case. Assemble side pinions and thrust washers to spider, then place this assembly in left-hand case. Place right-hand side gear on side pinions.
4. Place side gear thrust washer on right-hand side gear. Position right-hand case over left-hand case, aligning matching marks on each case and, using bolts as guides, drive right-hand case into herringbone gear.
5. Install bolts with heads positioned on left-hand side and tighten to correct torque. *The four oversize bolts are mounted midway between spider arms.* Lock nuts with wire.

Countershaft, Fig. 47

1. Place ring gear on countershaft, aligning punch marks.
2. Place oil collector disc on opposite side of countershaft flange.
3. Install and tighten capscrews to correct torque. Lock screws with wire.
4. Press bearing cones on end of countershaft.

Final Assembly

1. Place countershaft in differential carrier.
2. Lubricate bearings. Install bearing cups.
3. Install left-hand bearing adjuster in carrier, engaging only two or three threads.
4. Install right-hand bearing cage.
5. Tighten bearing cage to preload countershaft bearings as explained at the beginning of this chapter.
6. With new gasket in place on carrier, install power divider on carrier. Install and tighten lockwashers and nuts to correct torque.
7. Adjust ring gear and pinion for proper tooth contact (explained earlier).
8. After correct adjustment, install countershaft bearing cover gaskets, bearing covers, capscrews and lockwashers. Tighten screws to correct torque.
9. Place oil reservoir in carrier.
10. Lubricate bearing outer races. If removed, place snap rings on differential bearings. Place outer races on inner races, then install in carrier. Install bearing caps, making certain that snap rings rest in grooves in carrier and caps.
11. Install bearing capscrews and lockwashers and tighten to correct torque. Lock screws with wire.
12. Insert oil distributor in carrier and install capscrew and lockwasher. Install spring, gasket and plug.
13. Install differential carrier and power divider in axle housing.
14. Connect lockout shift lever.
15. Install axle shafts and connect propeller shafts.
16. Fill axle with correct lubricant.

TIMKEN (Rockwell-Standard) DRIVING AXLES

LUBRICANT CAPACITIES

Lubricant capacities are given as a guide only. The capacities of two similar axles of the same series may vary considerably due to design changes and the vehicle manufacturers' installation. The actual service capacity may be determined by carefully measuring the amount of lubricant necessary to fill the assembly to the correct level and measuring the lubricant again when it is drained. The vehicle should be on a level floor when this inspection is made.

Single Axles

Model	Oil, Pints
A-150	5½
B-100	10
B-140	12
B-150	3½
C-100	12½
D-100	12½
E-100	15
E-105	12½
E-150	9
E-300	13①
E-350	22①
E-370	22①
F-30	6
F-35	7
F-37	7
F-38	10
F-46	10
F-50	10
F-53	12
F-54	11
F-56	14
F-58	15
F-75	9
F-77	10
F-100	13
F-140	14
F-200	12
F-223	16
F-234	23
F-300	16
F-337	24
F-340	16①
F-400	16
F-409	28
F-501	10
F-544	10
F-551	11
F-552	11
F-580	15
F-583	15
F-2090	12
F-3100	16
F-3110	26
F-3200	22
F-4700	40
F-4710	32
F-7900	40
F-7910	32
FS-4711	32
FDS-750	7
G-161	21
G-340	24①
G-341	22①
G-361	21①
H-100	20
H-140	18
H-150	11
H-200	28①
H-240	22①
H-300	26①
H-340	22①
R-163	34
R-230	36①
R-230②	45①
R-300	34①
R-330	35①
R-330②	44①
R-390	60①
R-2090	10
R-3100	20
S-200	38①
S-300	39①
U-200	38①
U-300	39①
H-350	24①
H-370	24①
L-100	23
L-140	24
L-200	31①
L-240	22①
L-300	29①
L-340	22①
L-350	24①
L-370	32①
LT-200	31①
LT-300	29①
QT-140	24
QT-200	31①
QT-230	44①
QT-240	34①
QT-300	29①
QT-330	44①
QT-340	32①
Q-100	31
Q-200	34①
Q-300	32①
Q-350	34①
Q-370	34①
Q-380	36①
Q-390	36①
RT-240	32①
RT-340	32①
R-100	30
R-140	28
R-160	28
R-200	36①

Tandem Axles

Model	Oil, Pints
SDHD	16②
SDHR	16
SFHD	17②
SFHR	16½
SHHD	26②
SHHR	25
SLHD	32½②
SLHR	32
SQHD	34②
SQHR	31
SQTT-335	44①
SRT-235	45①
SRT-335	44①
SLD	28
SLDD	28②
SQD	22
SQDD	22②
SRD	22
SRDD	22②
4600, SFD	28
4600, SFDD	28②
4700, SFD	28
4700, SFDD	28②
75, SFD	16
157, SFD	9
353, SD	24
375, SFD	23
450, SFD	36
454, SD	26
456, SW	28
457, SW	28
460, SW	28
460, SFD	29
SQW	33
SQW	40③
3010, SD	19
3010, SW	14
3013, SW	23
3020, SD	31
3020, SFD	31
3020, SFDD	32③
3020, SW	28
3022, SW	27
472, SD	28
473, SD	28
700, SBD	7
760, SBD	5
1000, SBD	8
1055, SBD	19
1500, SBD	12
1555, SBD	26
3000, SD	19
3000, SW	19
3002, SW	17
3456, SW	24
3458, SW	33

①—Add one pint of lubricant to pinion cage when new or reconditioned drive unit is installed.

②—Add two pints of lubricant to inter-axle differential housing when new or reconditioned drive unit is installed in addition to specified amount of lubricant in housing.

③—Housing cover 6½" deep overall.

Single Reduction Axles

DISASSEMBLE

Remove Carrier From Housing

1. Remove plug from bottom of housing and drain lubricant.
2. Remove axle shaft drive stud nuts and lockwashers.
3. Rap axle shafts sharply in center of flange to free dowels. Remove taper dowels and pull out axle shafts. *Prying shafts loose will damage hubs and oil seals.*
4. Disconnect universal at pinion shaft.
5. Remove carrier-to-housing stud nuts and washers. Loosen two top nuts and leave on studs to prevent carrier from falling.
6. Break carrier loose from axle housing with rawhide mallet.
7. Remove top nuts and washers and work carrier free, using puller screws in holes provided. A small pinch bar may be used to straighten carrier in housing bore. However, the end must be rounded to prevent indenting carrier flange. A roller jack may be used to facilitate removal of carrier.

Disassemble Carrier, Fig. 1

INDEX

Model Index and Lube Capacities 209
Single Reduction Axles 209
Double Reduction Axles 213
Two Speed Double Reduction Axles 217
Single Reduction Thru-Drive Tandem Axles 222
Double Reduction Thru-Drive Tandem Axles 226
Worm Drive Axles 233
Split Housing Axles 237
Electric Shift for Two Speed Axles 239

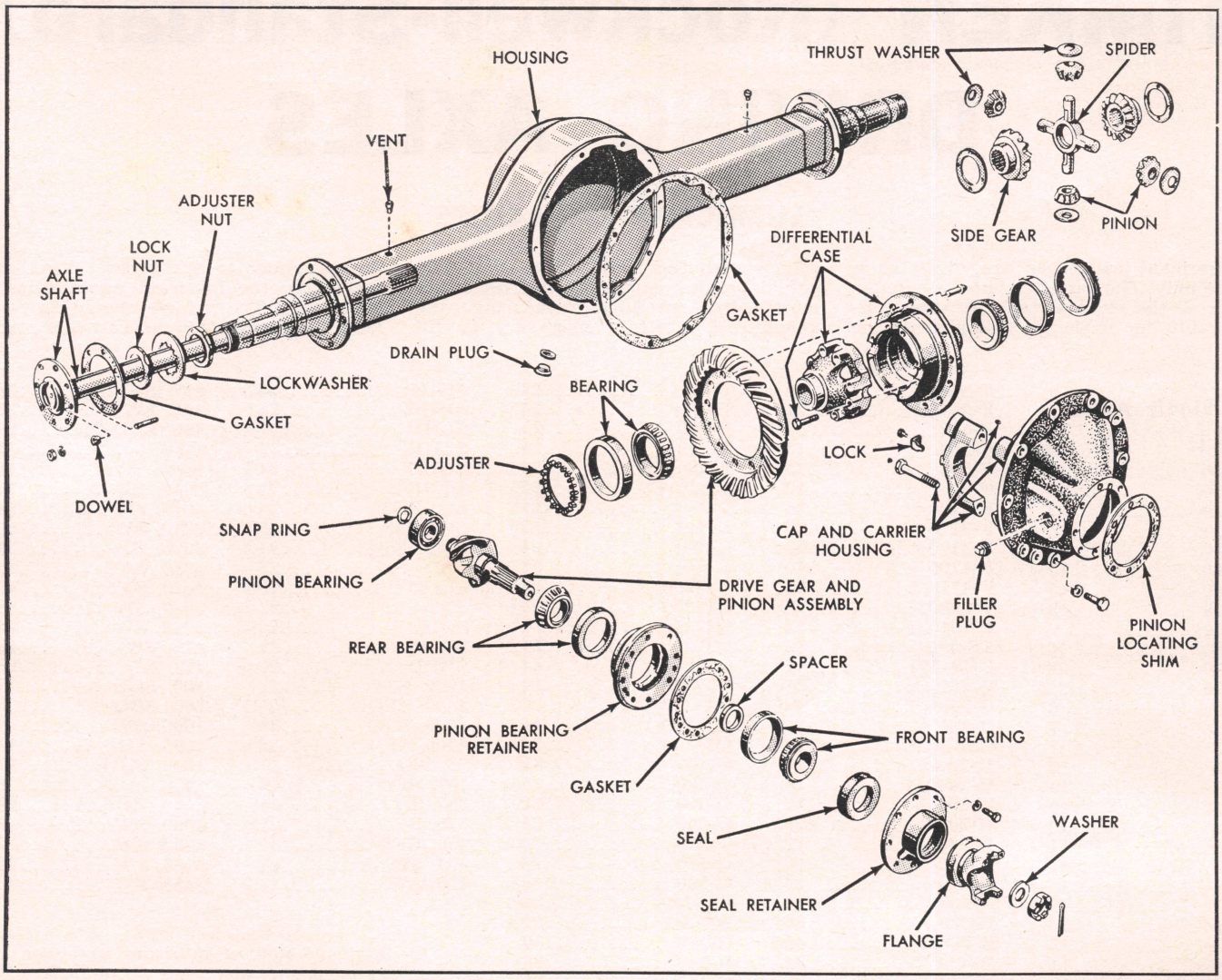

Fig. 1 Timken single reduction axle (typical)

1. To remove differential and gear assembly, cut lock wire. Remove capscrews and adjusting nut locks.
2. Center punch one differential carrier leg and bearing cap to identify for proper reassembly.
3. Remove bearing cap stud nuts or capscrews, bearing caps and adjusting nuts.
4. Loosen jam nut and back off thrust block adjusting screw.
5. Lift out differential and gear assembly.
6. Remove thrust block from inside of carrier housing.

Disassemble Differential & Gear

1. If original identification marks are not clear, mark differential case halves with a punch or chisel for correct alignment upon reassembly.
2. Cut lock wire, remove bolts and separate case halves.
3. Remove spider, pinions, side gears and thrust washers.
4. To remove ring gear rivets, carefully center punch rivets in center of head. Use a drill 1/32″ smaller than body of rivet to drill through head. Then press out rivets.
5. If necessary to remove differential bearings, remove with a suitable puller.

Removing Pinion & Cage

1. Hold flange or yoke with suitable tool and remove pinion shaft nut and washer.
2. Remove flange or yoke with a suitable puller. *Driving flange off will cause runout.*
3. Remove pinion cage stud nuts or capscrews.
4. Remove bearing cover and oil seal assembly.
5. Remove bearing cage, using puller screws in holes provided. *The use of a pinch bar will damage shims. Driving pinion from inner end with a drift will damage bearing lock ring groove.*
6. Wire shim pack together to facilitate adjustment on reassembly.

Disassemble Pinion & Cage

Both splined and tapered pinion shafts are used in single reduction carriers. Where the tapered shaft is used, the thrust bearings are adjusted by means of adjusting and lock nuts. On the splined shaft, this adjustment is secured with a selective spacer or spacer combination.

Splined Shaft

1. Tap shaft out of cage with a soft mallet and press shaft from cage.
2. Remove outer bearing from cage.
3. Remove spacer or spacer combination from pinion shaft.
4. If necessary to replace rear thrust bearing or radial bearing, remove with suitable puller.
5. Remove oil seal from bearing cover.

Tapered Shaft

1. Straighten lock washer and remove lock nut, washer, adjusting nut and thrust washer.
2. Tap pinion out of cage with a soft mallet or press shaft from cage.
3. Remove bearing from cage.
4. Remove bearings from shaft with suitable puller if necessary.
5. Remove oil seal from bearing cover.

REPAIRS

1. Replace all worn or damaged parts. Hex nuts with rounded corners, all

lock washers, oil seals and gaskets should be replaced.

2. Remove nicks, mars or burrs from machined or ground surfaces. Threads must be clean and free to obtain accurate adjustment and correct torque. A fine mill file or India stone is suitable for this purpose. Studs must be tight prior to reassembling of parts.
3. All bronze bushed differential pinions should be ball burnished after bushing installation. Install bushing with a small stepped drift. The small O.D. should be .010″ smaller than the bushing burnished I.D. and 1½ times bushing length. Always install bushings so end is even with I.D. chamfer or about $\frac{1}{16}$″ below the spherical surface.
4. When assembling components, use a press where possible.
5. Tighten all nuts to the specified torque (see torque limits following service instructions). Use soft iron locking wire to prevent possibility of wire breakage.
6. The burrs, caused by lockwashers, at the spot face of stud holes of cages and covers should be removed to assure easy reassembly of these parts.

REASSEMBLY OF CARRIER

Pinion & Cage

Splined Shaft

1. Press rear thrust and radial bearings firmly against pinion shoulders with a suitable sleeve that will bear only on bearing inner race.
2. Install radial bearing lock ring and squeeze ring into pinion shaft groove with pliers.
3. If new cups are to be installed, press firmly against pinion bearing cage shoulders.
4. Lubricate bearings and cups with light machine oil.
5. Insert pinion and bearing assembly in pinion cage and position spacer or spacer combination over pinion shaft.
6. Press front bearing firmly against spacer.
7. Rotate cage several revolutions to assure normal bearing contact.
8. While in press under pressure, check bearing preload torque. Wrap soft wire around cage and pull on a horizontal line with a spring scale, Fig. 2. If a press is not available, the pinion nut may be tightened to the correct torque and preload checked.
9. The correct pressures and torque for checking pinion bearing preload are as follows:

Thread Size	*Pressure*	*Torque, Lb. Ft.*
1″ x 20	6 tons	300-400
1¼″ x 18	11 tons	800-1100
1½″ x 12	14 tons	800-1100
1½″ x 18	14 tons	800-1100
1¾″ x 12	14 tons	800-1100

10. Use starting torque, not rotating torque. If rotating torque is not within 5 to 15 pound inches, use thinner spacer to increase or thicker spacer to decrease preload. Assuming pinion cage diameter to be 6″, the radius would be 3″ and with 5 pounds pull would equal 15 pound inches of preload torque.

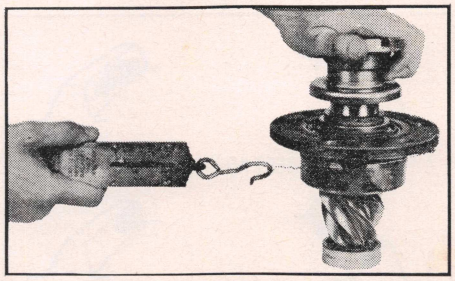

Fig. 2 Measuring pinion bearing preload

11. Press flange or yoke against forward bearing and install washer and pinion shaft nut.
12. Place pinion and cage over carrier studs, hold flange and tighten pinion shaft nut to correct torque. Flange must be held with a suitable tool or fixture to tighten nut.
13. Recheck pinion bearing preload torque. If rotating torque is not within 5 to 15 pound inches, repeat the foregoing procedure.
14. Hold flange and remove pinion shaft nut and flange.
15. Lubricate pinion shaft oil seal and cover outer edge of seal body with a non-hardening sealing compound. Press seal against cover shoulder with a seal driver.
16. Install new gasket and bearing cover.
17. Press flange against forward bearing and install washer and pinion shaft nut.
18. Tighten to correct torque and install cotter key. *Do not back off nut to align cotter key holes.*

Tapered Shaft

1. Press rear thrust and radial bearings firmly against pinion shaft shoulder.
2. Install radial bearing lock ring and squeeze ring into pinion shaft groove with pliers.
3. If new cups are to be installed, press firmly against pinion cage shoulders.
4. Lubricate bearings and cups with light machine oil.
5. Install forward bearing, thrust washer and adjusting nut.
6. Install new lockwasher and lock nut.
7. Adjust pinion bearing preload to 5 to 15 pound inches with lock nut tightened securely against washer. *Lock nut must be tight to secure correct preload.*
8. Bend lock washer when correct preload has been obtained.
9. Lubricate pinion shaft oil seal and cover outer edge of seal body with a non-hardening sealing compound. Press seal against cover shoulder with a seal driver.
10. Install new gasket and bearing cover. Cover should be carefully installed to prevent cutting seal on keyway.
11. Install key, press flange on taper and install washer and pinion shaft nut.
12. Tighten to correct torque and install cotter key. *Do not back off nut to align cotter key holes.*

Install Pinion & Cage

1. Install correct shim pack. Locate thin shims on both sides for maximum sealing ability.
2. Position pinion and cage assembly over studs and tap into position with soft mallet.
3. Install lock washers and stud nuts or capscrews. Tighten to correct torque.

Assemble Differential & Gear

1. Rivet ring gear to case half with new rivets. Rivets should not be heated, but always upset cold. When the correct rivet is used, the head being formed will be at least ⅛″ larger in diameter than the rivet hole. The head will then be approximately the same height as the preformed head. Excessive pressure will cause distortion of the case holes and result in gear eccentricity. Bolts are available for service replacement of rivets.
2. Lubricate differential case inner walls and all component parts with axle lubricant.
3. Position thrust washer and side gear in ring gear and case half, Fig. 3.
4. Place spider with pinions and thrust washers in position.
5. Install component side gear and thrust washer.
6. Align mating marks and position component case half. Draw assembly together with four bolts or capscrews equally spaced.
7. Check assembly for free rotation of differential gears and correct if necessary.
8. Install remaining bolts and capscrews. Tighten to correct torque and lock with wire.
9. If bearings are to be replaced, press squarely and firmly on differential case halves.

Install Bearing Cups In Carrier Leg Bores

1. Temporarily install bearing cups or threaded adjusting rings and bearing caps. Tighten capscrews to proper torque.

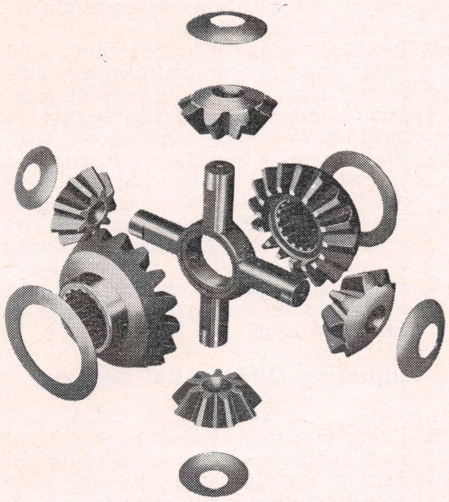

Fig. 3 Differential pinion and side gear assembly

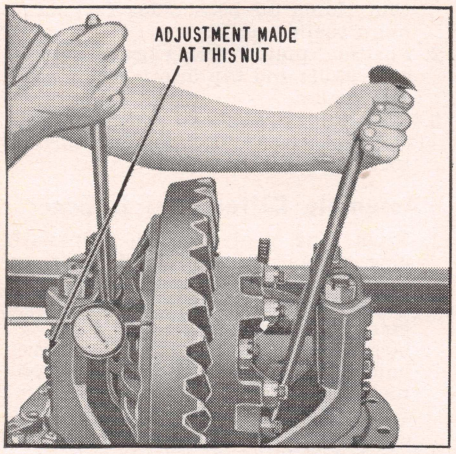

Fig. 4 Adjusting differential bearing preload

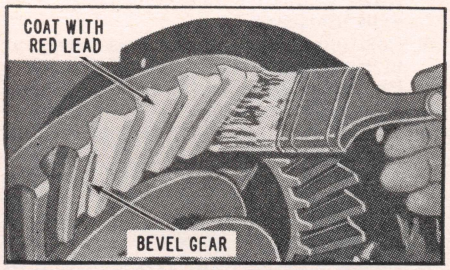

Fig. 5 Painting ring gear teeth for obtaining tooth contact impressions

2. The bearing cups must be a hand push fit in the bores, otherwise the bores must be re-worked with a scraper or some emery cloth until a hand push fit is obtained. Use a blued bearing cup as a gauge and check the fits as work progresses.

Install Differential & Gear

1. After checking related parts, coat differential bearing cones and cups with rear axle lubricant.
2. Place cups over assembled bearing cones and position differential assembly in carrier.
3. Insert bearing adjusting nuts and turn hand-tight against bearing cups.
4. Install bearing caps in correct location as marked and tap lightly in position. *If bearing caps do not position properly, adjusting nuts may be cross-threaded. Remove caps and reposition the adjusting nuts. Forcing caps into position will result in irreparable damage to carrier housing or bearing caps.*
5. Install flat washers where used and stud nuts or capscrews. Tighten to correct torque.

Adjusting Differential Bearing Preload

1. Using dial indicator at back face of ring gear, Fig. 4, loosen bearing adjusting nut *on side opposite gear only* enough to notice end play on dial indicator.
2. Tighten same adjusting nut only enough to obtain zero end play.

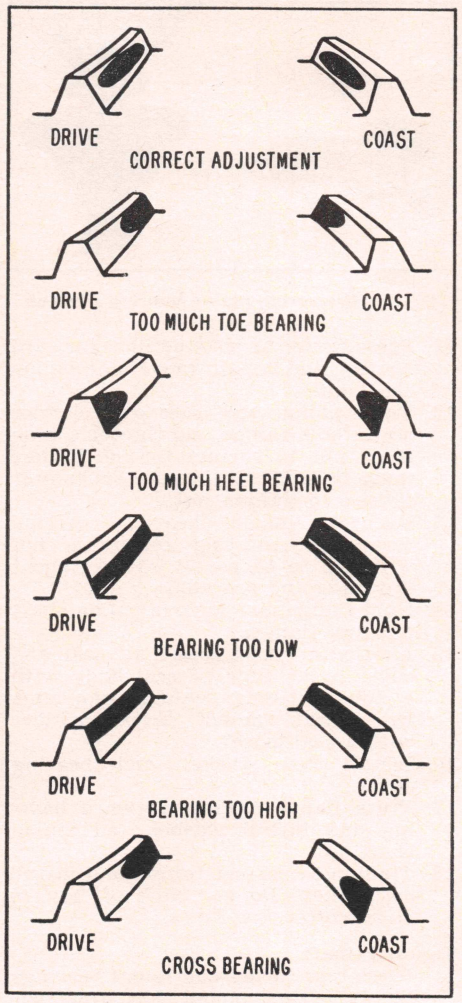

Fig. 6 Location, size and shape of tooth contacts

3. Check gear for runout. If runout exceeds .008″, remove differential and check for cause.
4. Tighten adjusting nuts *one notch each* from zero end play to preload differential bearings.

Check Ring Gear Backlash

If original gears are reused the backlash should be the same as before disassembly. For new gears the new backlash should be from .006″ to .012″. Adjust backlash by moving ring gear only. This is done by backing off one adjusting ring and advancing the opposite ring the same amount.

Check Gear Tooth Contact

Temporarily bolt up the pinion and cage to the differential carrier and coat the ring gear teeth with oiled red lead, Fig. 5. When the pinion is rotated, the red lead is squeezed away by the contact of the teeth, leaving bare areas the exact size, shape and location of the contacts. If these contacts are not acceptable, shims must be added to or removed from the shim pack located between the pinion cage flange and differential carrier housing. It may be necessary to make several attempts at the right selection of shims to obtain the correct tooth contact, Fig. 6.

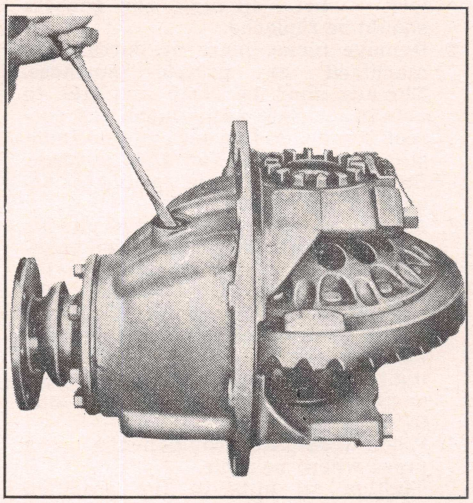

Fig. 7 Showing thrust block placed on back face of ring gear

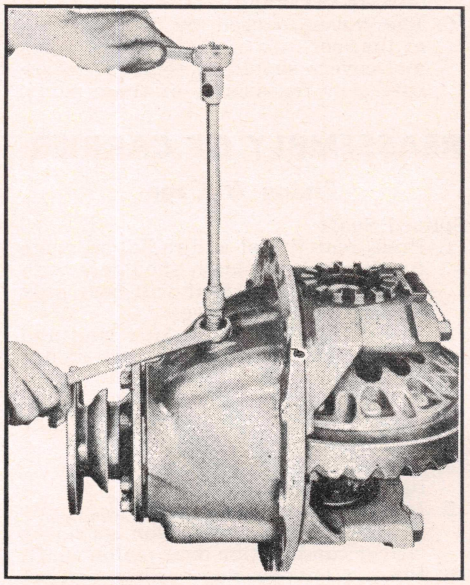

Fig. 8 Adjusting clearance between thrust block and back face of ring gear

Sharper tooth contact impressions may be obtained by applying a small amount of resistance to the gear with a flat steel bar and using a wrench to rotate the pinion. When making adjustments, check the drive side of the ring gear teeth. Coast side contact should be automatically correct when drive side contact is correct. As a rule coating about 12 teeth is sufficient for checking purposes.

Install Thrust Block

1. Remove thrust block adjusting screw and lock nut.
2. Place thrust block on rear face of ring gear, Fig. 7, and rotate gear until hole in thrust block is aligned with adjusting screw hole.
3. Install adjusting screw and lock nut and tighten screw enough to locate thrust block firmly against back face of ring gear.

CAP SCREWS AND STUD NUTS				
LOCATION	DIAMETER	NO. THREADS	TORQUE — LBS. FT. MIN.	TORQUE — LBS. FT. MAX.
Pinion cage	3/8"	16	26	29
	1/2"	13	82	91
	9/16"	12	116	129
	5/8"	11	160	180
Carrier to housing	7/16"	14	52	58
	1/2"	20	92	102
	5/8"	18	185	205
	3/4"	16	320	360
Axle differential case bolt	1/2"	20	92	102
	9/16"	18	130	145
	5/8"	18	185	205
	3/4"	16	320	360
Pinion shaft	7/8"	20	175	250
	1"	20	300	400
	1 1/4"	18	700	900
	1 1/2"	18	800	1100
	1 1/2"	12	800	1100
	1 3/4"	12	800	1100
Differential bearing adjusting nut lock	5/16"	18	15	17
	1/2"	13	82	91

AXLE DIFFERENTIAL BEARING-CAP CAP SCREWS OR STUD NUTS				
CAP SCREW OR STUD NUT DIAMETER	CAP SCREW OR COARSE STUD THREAD	STUD NUT OR FINE THREAD	TORQUE — LBS. FT. MIN.	TORQUE — LBS. FT. MAX.
5/8"	11	18	126	140
3/4"	10	16	225	250
7/8"	9	14	330	370
7/8"	14	14	375	415
1"	14	14	570	630

Fig. 9 Torque settings for Timken single reduction axles. Specifications apply to parts coated with machine oil. For dry (or "as received") parts, increase torque 10%. For parts coated with multi-purpose gear oil, decrease torque 10%. Nuts and studs to use same torque as for driving the stud

4. To secure correct adjustment of .010" to .015" clearance Fig. 8, loosen adjusting nut 1/4 turn and lock securely with nut.
5. Recheck to assure minimum clearance of .010" during full rotation of ring gear.

Install Carrier In Housing

1. Install new gasket over housing studs.
2. Roll carrier into position on roller jack. Start carrier into housing with four flat washers and nuts equally spaced. *Do not drive carrier into housing with a hammer at the carrier stud flange. The flange may easily be distorted and cause severe oil leakage.*
3. Install lock washers and stud nuts on any studs under carrier housing offsets. *It is impossible to start these nuts after carrier is drawn into housing.*
4. Tighten the four nuts over flat washers alternately to draw carrier squarely into axle housing.
5. Remove nuts and flat washers. Install taper dowels, lock washers and stud nuts. Tighten to correct torque.
6. Connect universal at pinion shaft and install axle shafts.

Lubrication

1. Fill axle housing to correct level with specified lubricant.
2. Lubricate universal joint.
3. Jack up both rear wheels and operate vehicle in high transmission gear at approximately 25 mph for five minutes to assure satisfactory lubrication of all parts. *Do not operate with one wheel jacked up. Operation in this manner will result in overheating the differential spider with resultant galling or shearing of spider pins.*

Double Reduction Axle

DISASSEMBLE

The procedures for removing the differential carrier from the axle housing and removing the differential and drive gear from the carrier is the same as outlined for the single reduction axle. During the procedure which follows, refer to Figs. 1 and 2.

Differential Case & Drive Gear

1. If original identification marks are not clear, center punch case halves for correct alignment on reassembly.
2. Cut lock wire, remove long bolts and separate case halves.
3. Remove spider, pinions, side gears and thrust washers.
4. Remove short bolts and separate gear from case half.
5. Remove differential bearings with suitable puller if necessary.
6. Remove drive gear rivets as directed for the Single Reduction Axle.

Pinion & Cage Assembly

1. Remove cage stud nuts or capscrews and lockwashers. Lift out cage assembly. *If cage is not free, tap it loose, using a soft drift on inner face of pinion or use puller screws in holes provided.*
2. Wire shim pack together to facilitate adjustment on reassembly.
3. Place pinion cage over carrier studs or secure with three capscrews. Hold flange and remove pinion shaft nut.
4. Press pinion shaft out of flange or yoke and cage.
5. Remove adjusting spacers or shims.
6. If necessary to renew the pinion or rear bearing, remove bearing with suitable puller.
7. Press front bearing and pinion shaft oil seal from cage. On assemblies where bearing cover is used, remove seal assembly from cover.

Cross Shaft Assembly

1. Remove stud nuts or capscrews and lockwashers from cross shaft bearing cage (side opposite drive gear).
2. Force off bearing cage with small pinch bar between back of gear and carrier housing (puller screw holes are also provided).

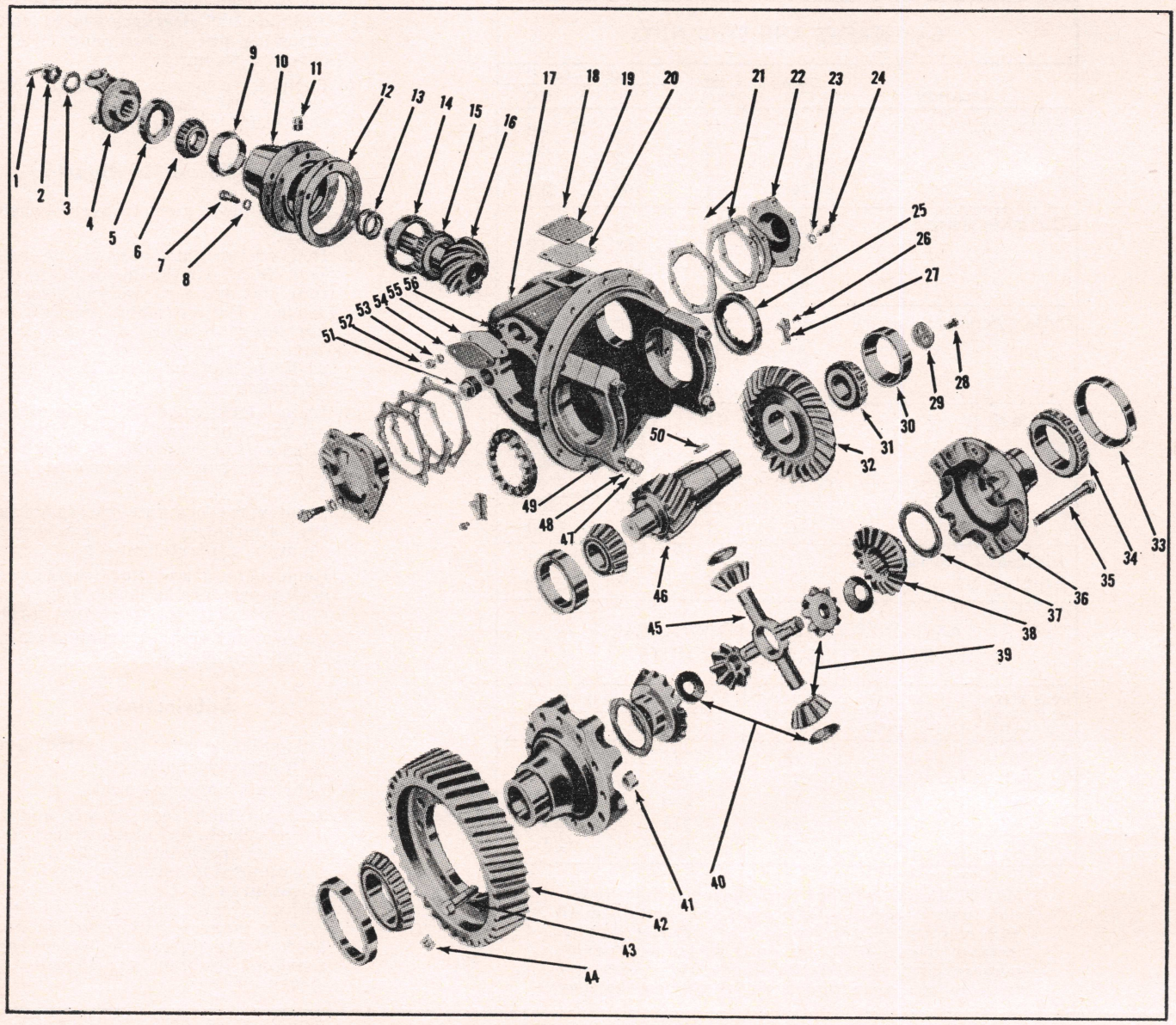

1. Cotter key
2. Yoke nut
3. Washer
4. Yoke and slinger assembly
5. Oil seal
6. Drive pinion outer bearing
7. Cap screw
8. Lock washer
9. Drive pinion outer bearing cup
10. Drive pinion bearing cage
11. Oil fill plug
12. Drive pinion shims
13. Drive pinion bearing spacer
14. Drive pinion inner bearing cup
15. Drive pinion inner bearing
16. Drive pinion
17. Differential carrier housing
18. Cap screw
19. Inspection hole cover
20. Gasket
21. Cross shaft cover shims
22. Cross shaft cover
23. Lock washer
24. Cap screw
25. Differential bearing adjusting nut
26. Cap screw
27. Differential bearing adjusting nut lock
28. Cap screw
29. Cross shaft bearing retainer
30. Cross shaft bearing cup
31. Cross shaft bearing
32. Drive gear
33. Differential bearing cup
34. Differential bearing
35. Differential case bolt
36. Differential case
37. Differential side gear thrust washer
38. Differential side gear
39. Differential pinion
40. Differential pinion thrust washer
41. Gear to case bolt nut
42. Helical spur gear
43. Gear to case bolt
44. Differential case bolt nut
45. Differential spider
46. Cross shaft (integral with spur pinion)
47. Differential bearing cap cap screw
48. Washer
49. Differential bearing cap
50. Square key
51. Oil level and fill plug
52. Stud nut
53. Lock washer
54. Shift shaft hole cover
55. Gasket
56. Stud

Fig. 2 Disassembled view of Timken Double Reduction Axle

3. Wire shim pack together to facilitate adjustment on reassembly.
4. Remove cross shaft assembly.
5. Cut lock wire, remove capscrews and bearing retainer plate from gear end of shaft.
6. Press shaft from gear and bearing.
7. If necessary to replace bearing, remove bearing from opposite end of cross shaft with a suitable puller.
8. If necessary to replace bearing cups, remove cross shaft bearing cover or cage (drive gear side). Wire shim pack together to facilitate adjustment on reassembly.

REPAIRS

Precautions when making repairs on this axle are the same as outlined for the Single Reduction axle.

REASSEMBLY

Cross Shaft

1. Insert key and start shaft into drive gear in line with keyway or splines.
2. Press shaft squarely into drive gear. Gear must be firmly against cross shaft shoulder. *To facilitate installation, drive gear may be heated in oil from 200 to 250 degrees F.* Install capscrews where used.
3. Press bearing firmly against cross shaft shoulder on spur gear end.
4. Install bearing retainer plate and capscrews on drive gear end. Tighten to correct torque and lock with soft wire.
5. Lubricate cross shaft bearings and cups with light machine oil.
6. If bearing cover or cage on drive gear side has been removed, replace using the correct shim pack. Tighten stud nuts or capscrews to correct torque. If cover has not been removed, retighten stud nuts or capscrews to correct torque.
7. Ease cross shaft assembly past differential bearing supports and position in bearing cup.
8. Press bearing firmly against drive gear, using a suitable sleeve.
9. Install correct shim pack and start cross shaft bearing cage into carrier housing.
10. Tap bearing cage into position with soft mallet. Install lockwashers and stud nuts or capscrews and tighten to correct torque.
11. Rotate assembly several revolutions before checking bearing preload to assure full bearing contact.
12. Check cross shaft bearing preload torque. Wrap soft wire around pinion and pull on a horizontal line with a spring scale, Fig. 3. Assuming spur gear diameter to be 4″, the radius would equal 2″. Thus, five pounds pull on the scale would equal 10 pound-inches bearing preload torque. Use rotating, not starting torque.
13. To obtain correct preload torque of 5 to 15 pound-inches, add or remove shims from pack under bearing cage on side opposite bevel gear.

Assemble Pinion & Cage

1. Press rear bearing squarely and firmly against pinion gear shoulder.
2. Press bearing cups squarely and firmly pinion cage shoulder.
3. Lubricate bearing and cups with light machine oil.
4. Insert pinion and bearing assembly in pinion cage.
5. Install selective spacer over pinion shaft with bevel side toward pinion shaft shoulder.

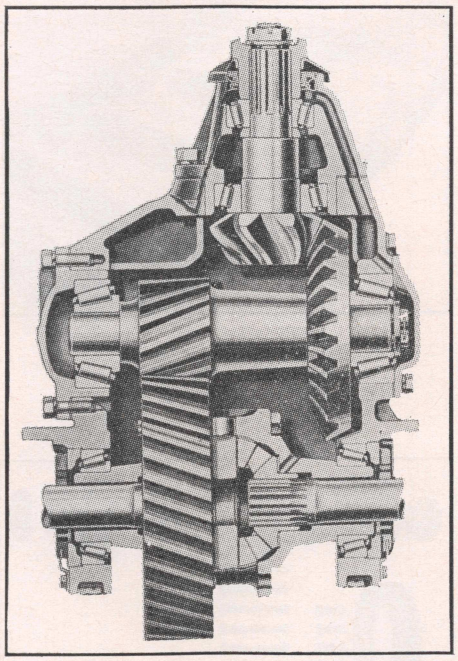

Fig. 1 Cutaway view of Timken Double Reduction Axle

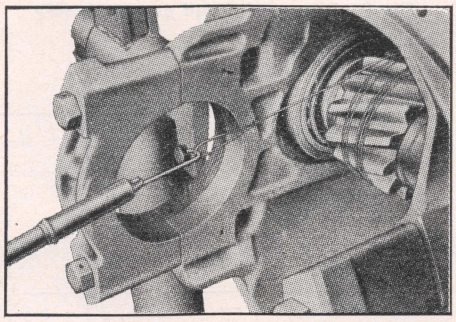

Fig. 3 Checking preload torque on cross shaft bearing

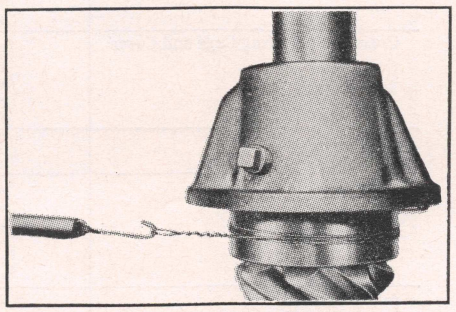

Fig. 4 Checking preload torque on pinion bearing

6. Press front bearing squarely and firmly against selective spacer with a suitable sleeve.
7. Rotate cage several revolutions to assure normal bearing contact.
8. While in press under pressure, check pinion bearing preload torque. Wrap soft wire around pinion cage and pull on a horizontal line with a spring scale, Fig. 4. If a press is not available, the preload may be checked with the flange or yoke installed and the nut tightened to the correct torque. The correct pressures or torques for checking pinion bearing preload are as follows:

Thread Size	*Pressure*	*Torque, Lb. Ft.*
1″ x 20	6 tons	300-400
1¼″ x 18	11 tons	700-900
1½″ x 12	14 tons	800-1100
1½″ x 18	14 tons	800-1100
1¾″ x 12	14 tons	800-1100

9. Assuming pinion cage diameter to be 6″ the radius would be 3″. Four pounds pull on the scale would equal 12 pound-inches bearing preload torque. Use rotating, not starting torque. If rotating torque is not within 5 to 15 pound-inches, use a thinner spacer to increase or a thicker spacer to decrease bearing preload.
10. Press flange or yoke firmly against pinion forward bearing.
11. Place pinion and cage assembly over carrier studs or secure with capscrews. Hold flange and tighten pinion shaft nut to correct torque. If rotating torque is not within 5 to 15 pound-inches, repeat foregoing procedure.
12. Hold flange and remove pinion shaft nut and yoke or flange.
13. Lubricate pinion shaft oil seal. Coat outer edge of seal body with a non-hardening sealing compound and press seal firmly against cage or cover shoulder. Install bearing cover where used with capscrews.
14. Reinstate flange or yoke. Tighten pinion shaft nut to correct torque.

Install Pinion & Cage

1. The oil passage holes in carrier housing, gasket, shim pack and pinion bearing cage must be aligned.
2. Install cross shaft assembly as outlined previously.
3. Install correct shim pack.
4. Install pinion cage assembly, lockwashers and stud nuts or capscrews. Tighten to correct torque.

Checking Drive Gear Lash

Generally, if original gears are being installed, red leading of teeth will not indicate the same contact as new gears and can be misleading. Gears that have been in service for long periods form running contacts due to wear of teeth. Therefore, th thickness of the original shim pack plus approximately .015″ additional shim stock should be maintained to check gear lash. In the event that gear lash is in excess of maximum tolerance, as stated under gear adjustment, reduce gear lash only in the amount that will avoid overlap of the worn tooth

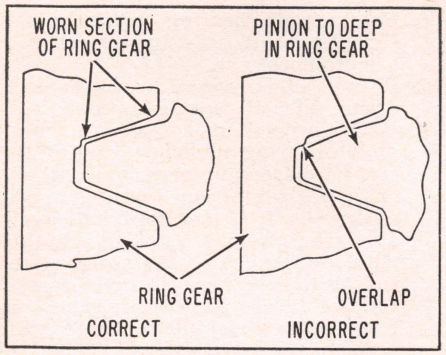

Fig. 5 Adjusting drive gear lash

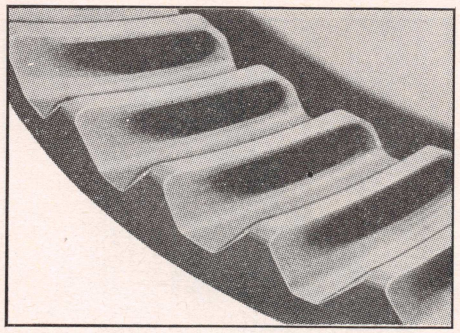

Fig. 8 Satisfactory tooth contact (gears loaded)

WRENCH TORQUE FOR PINION SHAFT NUTS

DIAMETER OR SIZE	THREADS PER INCH	TORQUE—LB. FT. MIN.	TORQUE—LB. FT. MAX.
⅞″	20	175	250
1″	20	300	400
1¼″	18	700	900
1½″	12	800	1100
1½″	18	800	1100
1¾″	12	800	1100

DIFFERENTIAL BEARING CAP CAP SCREWS OR STUD NUTS
(Earlier Axle Models Without Hardened Washers)

CAP SCREW OR STUD NUT DIAMETER	CAP SCREW OR COARSE STUD THREAD	STUD NUT OR FINE THREAD	TORQUE—LB. FT. MIN.	TORQUE—LB. FT. MAX.
⅝″	11	18	126	140
¾″	10	16	225	250
⅞″	9	14	330	370
⅞″	14	14	375	415
1″	14	14	375	415

DIFFERENTIAL BEARING CAP CAP SCREWS OR STUD NUTS
(Later Axle Models Employing Hardened Washers)

CAP SCREW OR STUD NUT DIAMETER	CAP SCREW OR COARSE STUD THREAD	STUD NUT OR FINE THREAD	TORQUE—LB. FT. MIN.	TORQUE—LB. FT. MAX.
⅝″	11	18	160	180
¾″	10	16	290	320
⅞″	9	14	470	520
⅞″	14	14	510	570
1″	14	14	570	630

Fig. 10 Torque specifications for Timken Double Reduction Axles

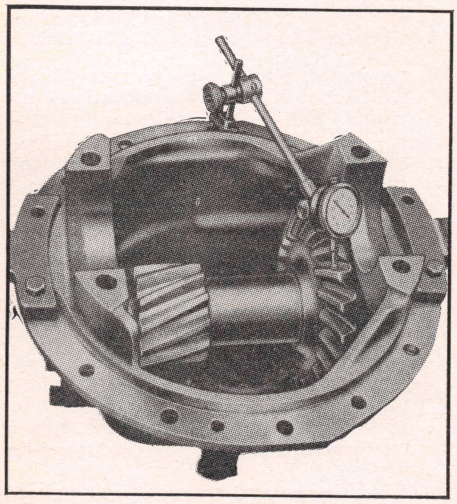

Fig. 6 Checking drive gear lash with dial indicator

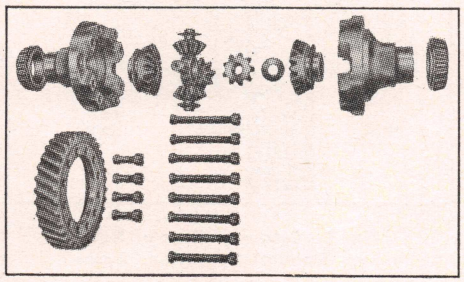

Fig. 9 Differential and gear assembly

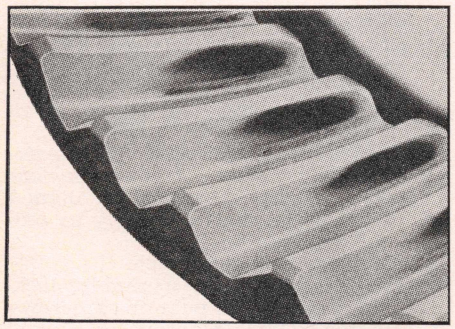

Fig. 7 Satisfactory tooth contact (gears unloaded)

Location	Diameter	Threads Per Inch	Torque Lb. Ft. Min.-Max.
Carrier to Housing	7/16″	14	52-58
	7/16″	20	52-58
	1/2″	13	82-91
	1/2″	20	82-91
	5/8″	11	160-180
	5/8″	18	160-180
Pinion Cage	3/8″	16	33-37
	7/16″	14	52-58
	7/16″	20	52-58
	1/2″	13	82-91
	1/2″	20	82-91
	9/16″	12	116-129
	9/16″	18	116-129
	5/8″	11	160-180
Cross Shaft Bearing Cage and Cover	1/2″	13	82-91
	1/2″	20	82-91
	9/16″	12	116-129
	9/16″	18	116-129
	5/8″	11	160-180
Cross Shaft Bearing Lock	7/16″	14	42-45
	9/16″	12	92-101
Differential Bolts	3/8″	16	33-37
	7/16″	14	52-58
	1/2″	20	92-102
	9/16″	18	130-145
	5/8″	18	185-205
	3/4″	16	320-360
Adjusting Nut Lock	5/16″	18	15-17
Inspection Cover	3/8″	16	26-29
Shift Unit (Mounting)	3/8″	16	26-29
Shift Unit Lock Nut,	3/8″	24	30-33
Set Screw and Clamp Screw	7/16″	20	30-33
Shift Unit Travel	1/2″	13	55-60
Limiting Screws	5/8″	11	30-35

Fig. 11 Torque specifications for capscrews or stud nuts on Timken Double Reduction Axles. Torques given apply to parts coated with machine oil. For dry (or "as received") parts, increase torques 10%. For parts coated with multi-purpose gear oil, decrease torques 10%. Nuts on studs to use same torque as for driving the stud

section, Fig. 5. Bevel gear lash can only be reduced to a point of maintaining smooth rotation of bevel gears.

Smoothness or roughness can be noted by rotating the bevel gear. If a slight overlap, Fig. 5, takes place at the worn tooth section, rotation will be rough. Generally with the original gears, tone should be satisfactory. Fig. 6 shows how a dial indicator is used to chek bevel gear lash.

Drive Gear Adjustment for Correct Tooth Contact

Checking tooth contact is accomplished by means of oiled red lead applied lightly to the drive gear teeth. When the pinion is rotated, the red lead is squeezed away by the contact of the teeth, leaving bare areas the exact size, shape and location of the contacts.

With adjustments properly made (pinion at correct depth and backlash set at .010") the contacts shown in Figs. 7 and 8 will be procured. The area of contact favors the toe and is centered between the top and bottom of the tooth.

The hand-rolled pattern shown in Fig. 7, will result in a pattern centered in the length of the tooth when the gears are under load, shown in Fig. 8. The loaded pattern will be almost full length and the top of the pattern will approach the top of the gear tooth.

After the correct contacts shown have been established with a backlash of .010", open the backlash to measure .020 to .026."

Recheck Cross Shaft Bearing Preload

1. Remove pinion and cage, keeping shim pack intact.
2. Tighten cross shaft bearing cage and cover stud nuts or capscrews to the correct torque.
3. Recheck cross shaft bearing preload torque.
4. Add or remove shims from pack under cross shaft bearing cage on the side opposite drive gear only as necessary to obtain correct bearing preload torque.
5. Replace pinion cage and install lockwashers, nuts or capscrews.
6. Tighten bearing cage stud nuts to correct torque.
7. Reinstall pinion and cage over shim pack determined by correct gear adjustment.
8. Install lockwashers and stud nuts and tighten to correct torque.

Drive Gear Backlash Adjustment

1. Adjust gear backlash to .020 to .026" (regardless of what markings might be etched on the gear set) by transposing cross shaft bearing cage or cover shims.
2. To move gear away from pinion, remove shims from pack under cross shaft bearing cage on opposite side of gear and add shims of equal thickness to pack under cross shaft bearing cover or cage on gear side. Shims should be transposed in this manner to maintain established preload.
3. To move gear toward pinion, remove shims from pack from under cross shaft bearing cover or cage on the gear side and add shims of equal thickness to pack under cross shaft bearing cage on the opposite side.

Assemble Differential & Spur Gear

When new spur gears or a new differential case is installed, the differential case holes must be line-reamed with the gear in order to assemble, using correct size bolts or rivets.

Type Using Long and Short Bolts, Fig. 9

1. Join spur gear to either differential case half with short bolts.
2. Lubricate differential case inner walls and all component parts with axle lubricant.
3. Install thrust washer and side gear in one of the case halves. Place spider with pinions and thrust washers in position. Install other side gear and thrust washer.
4. Check assembly for free rotation and correct if necessary.
5. Install remaining bolts and tighten to correct torque.
6. Install lock wire.
7. Press differential bearings squarely and firmly on differential case halves.

Type Using Rivets or Short Bolts

1. Lubricate differential case inner walls and all component parts with axle lubricant.
2. Install thrust washer and side gear in one of the differential case halves.
3. Position spur gear on case half.
4. Place spider with pinions and thrust washers in position and install other side gear and thrust washer.
5. Align mating marks and position other case half.
6. Draw either bolted or riveted assembly together with four bolts equally spaced and check for free rotation of differential gears.
7. Install remaining bolts or rivets together as required. Install rivets as directed for the Single Reduction Axle.

Final Assembly & Installation

The installation of bearing cups in carrier leg bores, of differential assembly in carrier and of carrier in axle housing is the same as outlined for the Single Reduction Axle.

Two Speed Double Reduction Axles

Fig. 1 shows the various types of Timken two speed double reduction drive axles. The first reduction is through a hypoid pinion and gear. The hypoid pinion and gear set operates in conjunction with either of two sets of helical gears and pinions of different ratios. This second reduction is selective between high and low ratio.

The hypoid pinion is mounted on two tapered roller bearings in a pinion cage. The hypoid gear is locked on the cross shaft by a press fit and key. The cross shaft is mounted on tapered roller bearings and carries two free-rolling helical pinions. Both helical pinions engage helical gears attached to the differential, which is mounted on tapered roller bearings.

To establish and maintain differential bearing preload, these axles may incorporate any one of the three types of carrier leg and cap machining shown in Figs. 2, 3 and 4.

REMOVING CARRIER FROM AXLE HOUSING

Front Mounted Type

1. Drain lubricant from housing.
2. Remove axle shafts.
3. Disconnect U-joint at pinion shaft.
4. Disconnect power shift unit.
5. Remove carrier-to-housing stud nuts, leaving two top nuts partially screwed on studs to prevent carrier from falling.
6. Break carrier loose from axle housing with a soft mallet. Remove tapered dowels if present.
7. Place a roller jack under carrier, remove two top nuts and work carrier free, using puller screws in holes provided. A small pinch bar may be used to straighten carrier in housing bore. However, be sure the end is rounded to prevent indenting carrier flange circle.

Top Mounted Type

1. Perform Steps 1 through 5 as outlined above.
2. Then break carrier loose from housing with soft mallet and remove tapered dowels. If necessary, back out studs.
3. Pull carrier straight out of housing with chain falls, boom, "A" frame or puller screws. A small pinch bar may be used to straighten carrier in housing bore. However, be sure end of punch is rounded to prevent indenting carrier flange circle.

DISASSEMBLE, FIG. 5

1. Center punch one carrier leg and bearing cap to identify for proper reassembly.
2. Remove capscrews and adjusting ring locks (where used).
3. Remove bearing cap, screws, bearing cups and adjusters.

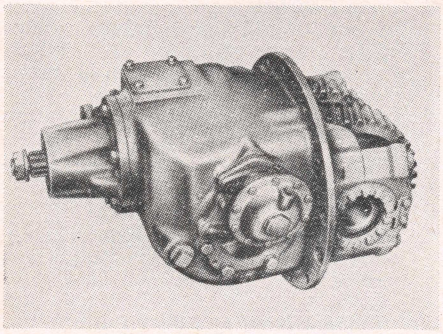

FRONT MOUNTED DRIVE UNIT

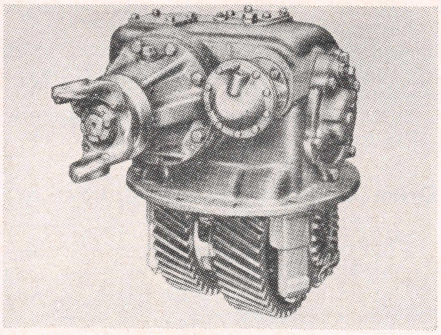

TOP MOUNTED DRIVE UNIT

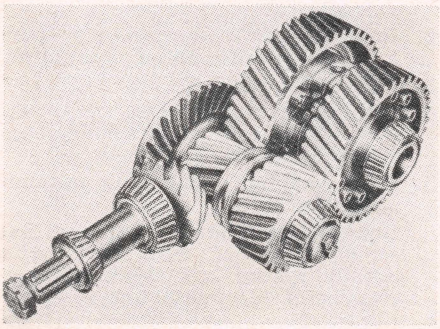

FRONT MOUNTED GEAR TRAIN

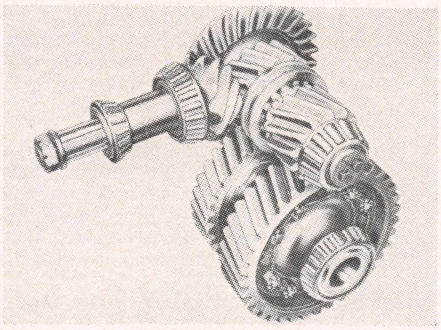

TOP MOUNTED GEAR TRAIN

Fig. 1 Timken two-speed double reduction axles

not clear, center punch differential case halves for correct alignment upon reassembly.

6. Separate case halves and remove differential components.
7. Remove short bolts or rivets and separate gears from case when gear or case is to be replaced. Remove differential bearings with suitable puller when desired.
8. Hold flange and remove pinion shaft nut. Remove attaching capscrews and lift out pinion cage. If cage is not free, tap loose with a soft drift on inner face of pinion or use puller screws in holes provided.
9. Wire pinion cage shims together to facilitate adjustment on reassembly.
10. Press pinion shaft out of flange and cage. Remove adjusting spacers.
11. If necessary to replace pinion or rear bearing, remove bearing with suitable puller.
12. Press front bearing and pinion shaft oil seal from cage.

Remove Side Mounted Shift Unit

1. Remove lockwire at fork locking screw.
2. Loosen lock nut on shift fork lock screw and remove screw and nut.
3. Remove two shift unit stud nuts and washers.
4. Remove shift unit and shaft assembly and lift out shift fork.
5. Tap sleeve from carrier with a soft mallet.
6. Wire shim pack to keep intact for proper adjustment on reassembly.

Remove Front Mounted Shift Unit

1. Remove four shift unit adapter screws and washers.
2. Remove shift unit and adapter assembly from carrier.

Remove Cross Shaft

1. Remove capscrews from cross shaft bearing cage (side opposite hypoid gear).
2. Force out bearing cage with small pinch bar between back of hypoid gear and carrier housing (puller screw holes also provided).
3. Wire shim pack together to facilitate adjustment on reassembly.
4. On models with front mounted shift units, remove lockwire and set screw holding shift fork on shift shaft. Slide shaft out and remove fork from inside housing.
5. Thread out cross shaft assembly. Some wide ratio carriers will require removal of high speed pinion and bearing from cross shaft before removing cross shaft from carrier. On these units, proceed as follows:
6. Raise cross shaft through cage bore. Remove bearing retaining plate. Use puller to remove bearing. Remove high speed helical pinion from cross shaft. Thread out cross shaft. *Some wide range carriers will permit using cross shaft to that high speed pinion and bearing can be pulled off together.*

Disassemble Cross Shaft

1. Remove capscrews and retaining plates.
2. Press cross shaft from hypoid gear and bearing. Lift off helical pinion and remove shift collar, poppets and springs.
3. Replace shift collar and press shaft through remaining helical pinion and bearing.
4. If necessary to replace cross shaft bearing cups, remove cross shaft bearing cover (hypoid gear side).

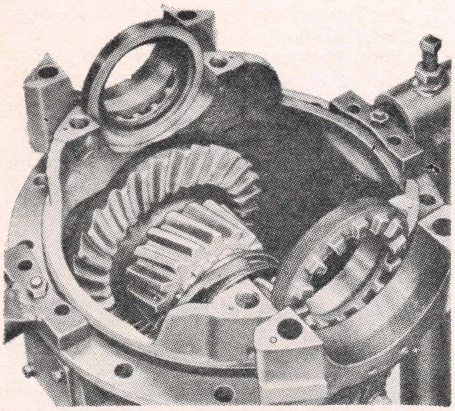

Fig. 2 Type with threaded adjusting rings on both sides. This type positions differential as well as preloading bearings by moving threaded rings in or out

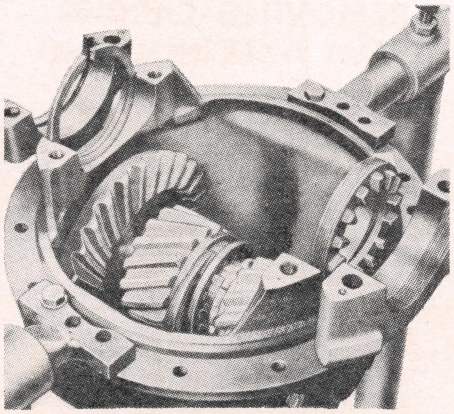

Fig. 3 Type with threaded ring on one side and split ring on opposite side. Split ring and groove locates differential whereas threaded ring is moved in or out to preload bearings

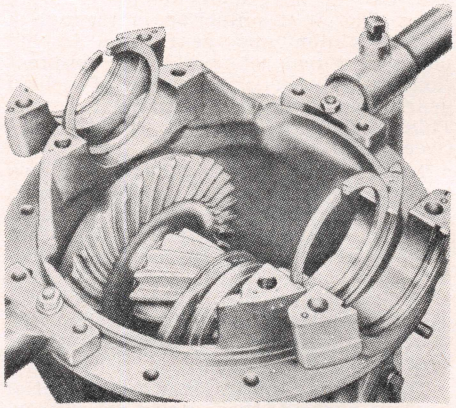

Fig. 4 Type with split rings on both sides. Bearing preload is established by using various thickness split rings. Differential positioning is automatic

Wire shim pack together to facilitate adjustment on reassembly.

5. Remove cups from cages with suitable puller. Cup in cover side of carrier can be removed by tapping.

Service Notes

1. Replace all worn or damaged parts. Hex nuts with rounded corners, all lock washers, oil seals and gaskets should be replaced.
2. Remove nicks, mars or burrs from machined or ground surfaces. Threads must be clean and free to obtain accurate adjustment and correct torque. A fine mill file or India stone is suitable for this purpose. Studs must be tight prior to reassembling parts.
3. All bronze bushed differential pinions should be ball burnished after bushing installation. Install bushing with small stepped drift. The small O.D. should be .010″ smaller than the bushing burnished I.D. and 1½ times bushing length. Always install bushings so end is even with the I.D. chamfer or about $\frac{1}{16}$″ below the spherical surface.
4. Burrs, caused by lock washers at the spot face of stud holes of cages and covers should be removed to assure easy reassembly of these parts.

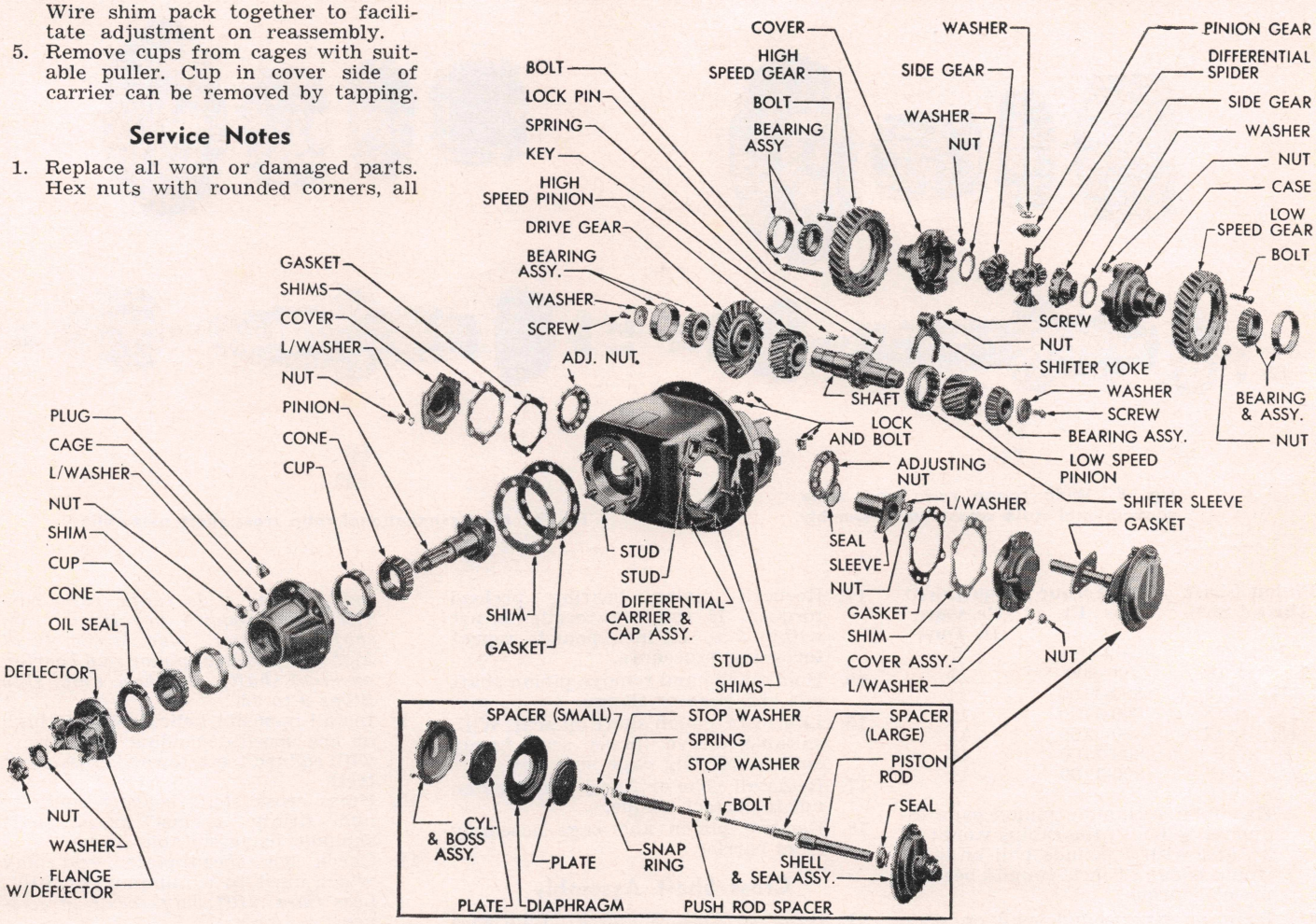

Fig. 5 Exploded view of Timken two speed double reduction axle of the front mounted type with vacuum shift unit

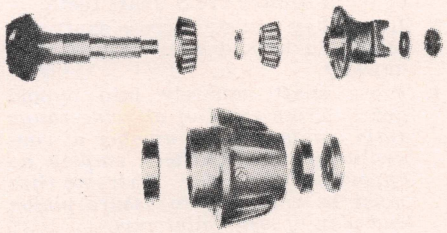

Fig. 6 Hypoid pinion and cage assembly

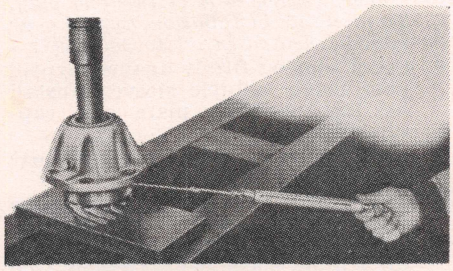

Fig. 7 Checking pinion bearing preload

REASSEMBLE CARRIER

Hypoid Pinion & Cage

1. Refer to Fig. 6. Press rear bearing squarely and firmly against pinion shaft shoulder.
2. Press bearing cups squarely and firmly against pinion cage shoulder.
3. Lubricate bearing and cups with light machine oil.
4. Insert pinion and bearing in cage.
5. Install selective single or combination spacers over pinion shaft.
6. Install single spacer with O.D. bevel toward outer bearing cone. Install two combination spacers with I.D. bevels opposite each other and large flat faces together. *Spacers must be installed in this manner to prevent interference with outer bearing cone roller cage.*
7. Press front bearing squarely and firmly against selective spacer with suitable sleeve.
8. Rotate cage several revolutions to assure normal bearing contact.
9. While in press under pressure, check pinion bearing preload torque. Wrap strong cord around pinion cage and pull on a horizontal line with a spring scale, Fig. 7.
10. If a press is not available, pinion nut may be tightened to the correct torque and preload checked as follows:

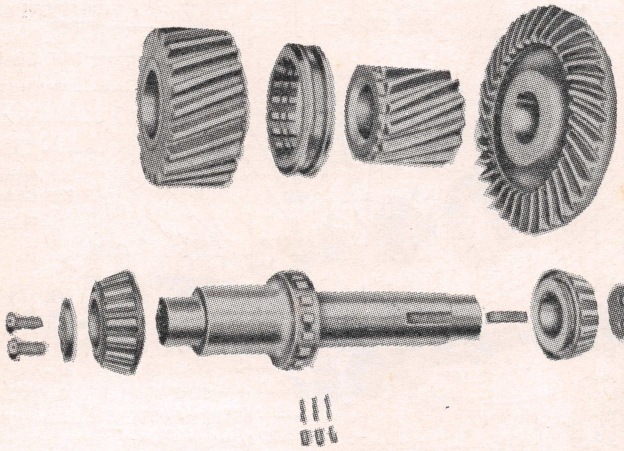

Fig. 8 Wide range ratio and some conventional ratio cross shaft assembly

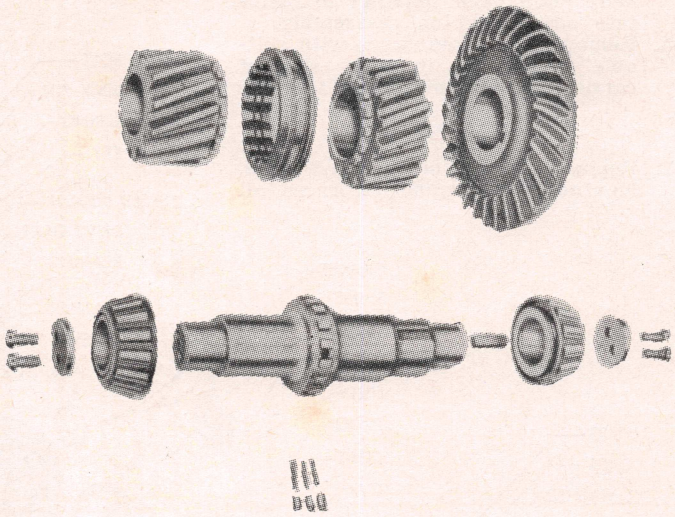

Fig. 9 Most conventional ratio cross shaft assemblies

Pinion Shaft Thread Size	Nut Torque Lbs. Ft.	Equivalent Pressure In Tons
1″ x 20	300-400	6
1¼″ x 18	700-900	11
1½″ x 12	800-1100	14
1½″ x 18	800-1100	14
1¾″ x 12	800-1100	14
2″ x 16	800-1100	14
2⅛″ x 12	800-1100	14

Example: Assuming pinion cage diameter to be 6″, the radius would be 3″, and with 4 pounds pull on scale would equal 12 inch pounds bearing preload torque.

11. Read rotating pounds pull on scale (not starting pounds pull). If rotating torque is not within 5 to 15 inch pounds, use a thinner spacer to increase or a thicker spacer to decrease preload torque.
12. Press flange or yoke firmly against forward pinion bearing.
13. Use carrier as a convenient holding fixture for pinion and cage assembly. Hold flange and tighten shaft nut to correct torque.

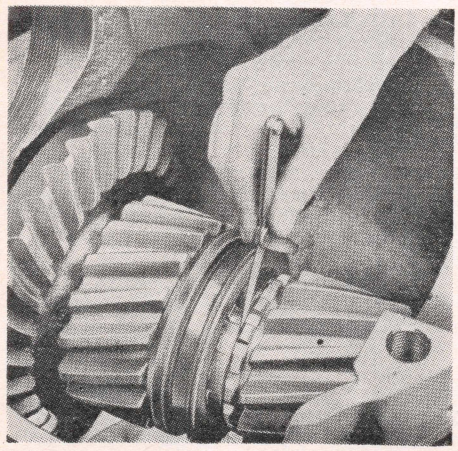

Fig. 10 Checking helical pinion end play with feeler gauge

14. Recheck pinion bearing preload torque. If rotating torque is not within 5 to 15 inch pounds repeat foregoing procedure.
15. Hold flange and remove pinion shaft nut and yoke or flange.
16. Lubricate pinion shaft oil seal. With suitable sleeve, press seal firmly against bearing cage shoulder.
17. Reinstall yoke or flange and tighten nut to correct torque.
18. Remove pinion and cage assembly from carrier.

Cross Shaft Assembly

1. Refer to Figs. 8 and 9. Lubricate inner bearing surfaces on helical pinions with axle lubricant.
2. Position high or low speed helical pinion (depending on type of carrier) on cross shaft with splined row of teeth toward cross shaft teeth.
3. Install key and start cross shaft and pinion in hypoid gear in line with keyway.
4. Press shaft squarely into hypoid gear. *Cross shaft of all wide range ratio carriers and a number of conventional ratio carriers employ no hypoid gear shoulder. Extreme care must be exercised to assure pinion end play of .010″ minimum.*
5. Check helical pinion end play with feeler gauge, Fig. 10. End play must be .010″ minimum to .026″ maximum. *On conventional ratio carriers where definite gear stop is provided by cross shaft shoulder, it is still necessary to have this end play. To facilitate installation, hypoid gear may be heated in oil to 200-250°.*
6. Press bearing firmly against hypoid gear using suitable sleeve. Install bearing retaining plate and capscrews.
7. Install poppets and springs and coat with axle lubricant.
8. Align all three tapered shift collar splines with poppets and position with shift collar marked "low side" toward low speed helical pinion. Due to tooth spacing, some shift collars can be assembled in one position only. *Some wide range ratio carriers will require installing cross shaft in carrier before assembly of high speed helical pinion and bearing on cross shaft. On these units skip Steps 9 to 12.*
9. Install opposite helical pinion (high or low speed depending on carrier) with splined teeth toward cross shaft teeth.
10. Press cross shaft bearing squarely and firmly against cross shaft shoulder using suitable sleeve.
11. Check low speed pinion end play which must be a minimum of .010″. *Less than .010″ may result in seizure.*
12. Install bearing retaining plates and capscrews.

Install Cross Shaft In Carrier

Gaskets at the pinion cage, cross shaft covers and cages have not been used in units produced for several years. Therefore, when assembling a drive unit formerly using gaskets, add approximately .015″ shim stock to original shim pack to maintain correct bearing preload and gear adjustment. Thin shims should be located on both sides of pack to obtain maximum sealing ability.

On wide range ratio carriers requiring

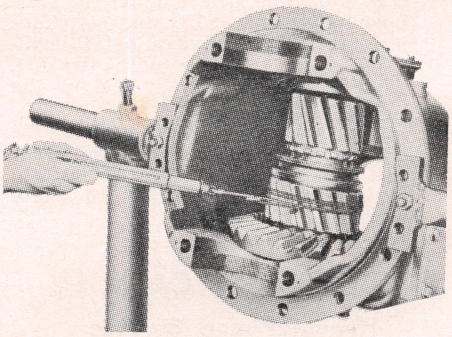

Fig. 11 Checking cross shaft bearing preload

assembly of high speed helical pinion and bearings after cross shaft is in the carrier, proceed as follows:

1. Lubricate cross shaft bearings and cups with light machine oil.
2. Install cross shaft assembly (minus high speed helical pinion) into carrier with cage or cover of hypoid side removed.
3. Install high speed pinion and set up in a press so that bearing retaining plate at hypoid side of cross shaft may be rested on a support at cover or cage opening.
4. Press bearing opposite hypoid gear onto shaft. Install bearing retaining plate and capscrews.
5. Install bearing cage or cover with shim pack on hypoid side of carrier. Replace capscrews and lock washers, then tighten to proper torque. *Should a press not be available, cross shaft bearing opposite gear side may be installed with a suitable driver placed against the inner race of bearing providing gear side of shaft is blocked up against bearing retainer. Do not drive or press bearings onto cross shaft with opposite bearing resting on cage or in cup. To do so will brinell cup and roller surfaces.*

On carriers permitting complete assembly of cross shaft before threading into carrier housing, proceed as follows:

1. Lubricate bearings and cups with light machine oil.
2. If bearing cover or cage on hypoid gear side has been removed, replace it using correct shim pack.
3. Thread cross shaft past differential bearing supports and position in bearing cup.
4. On carriers with front mounted shift units, position shift fork and install shift shaft. Align lock nut hole in fork with shaft indent and tighten lock screw and nut. Wire lock screw to fork.
5. Start bearing cage (side opposite hypoid gear) into carrier housing.
6. Tap bearing cage into position with soft mallet. Install capscrews.

Check Cross Shaft Bearing Preload

1. In checking cross shaft bearing preload torque, always rotate cross shaft and gear assembly several revolutions before checking preload to assure normal bearing contacts.
2. Lock low speed pinion and cross shaft with shift collar. Wrap a strong cord around pinion and pull on a horizontal line with a pound spring scale, Fig. 11. Assuming the pinion diameter to be 4", the radius would be 2", and with a pull of 7 pounds on the scale, the bearing preload would be 14 inch pounds of preload torque.
3. Read rotating pull (not starting pull). If preload torque is not within 5 to 15 inch pounds, add shims under cage (opposite hypoid gear) to decrease or remove shims to increase preload torque.

Install Pinion & Cage

1. Install pinion cage with original shim pack. Install capscrews and tighten.
2. Adjust hypoid gear backlash to .014-.020" (regardless of what markings might be etched on gear set) by transposing cross shaft bearing cage or cover shims, Fig. 12.
3. To move bevel gear away from pinion, remove shims from pack under cross shaft bearing cage on side opposite bevel gear and add shims of equal thickness to pack under cross shaft bearing cover or cage on bevel gear side. *Shims should be transposed in this manner to maintain established peload.*
4. To move bevel gear toward pinion, remove shims from pack under cross shaft bearing cover or cage on bevel gear side and add shims of equal thickness to pack under cross shaft bearing cage on side opposite bevel gear. *The actual backlash changes approximately .008" for each .010" movement of the gear.*
5. Check gear tooth contact for correct adjustment as outlined in the *Single Reduction Axle* section.

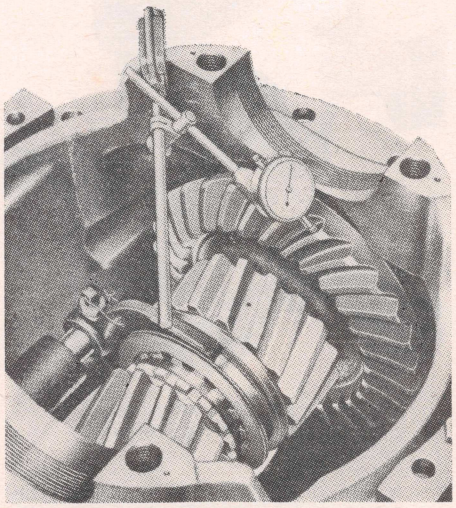

Fig. 12 Using dial indicator to determine gear lash

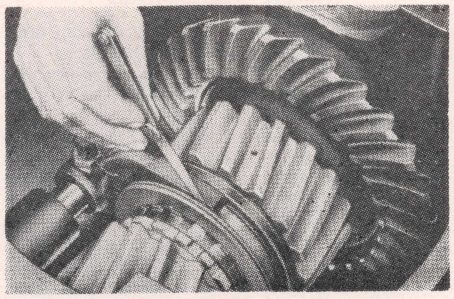

Fig. 13 Checking clearance of shift fork pads in shift collar with feeler gauge

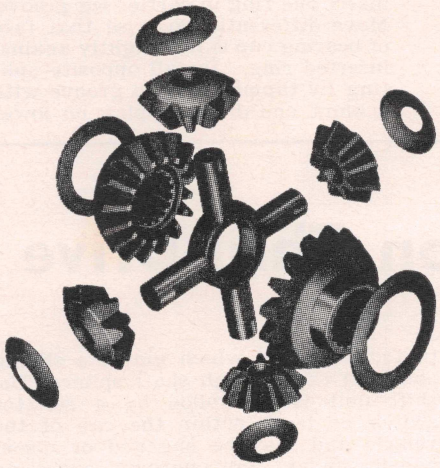

Fig. 14 Differential pinion and side gear assembly

Install Shift Units

Power Actuated Side Mounted Type

1. Tap shift unit sleeve into carrier housing over original shim pack. Install lock washers and stud nuts.
2. Install new flange gasket. Hold shift fork in position. Align lock screw holes in shift shaft and slide shift unit and shaft into position.
3. Tighten fork screw and lock nut to 30-35 ft. lbs.
4. Install shift unit lock washers and stud nuts.
5. Check clearance of shift fork pads in shift collar with gauge, Fig. 13. Clearance should not be less than .010" on each side of fork in both high and low speed positions. *When checking clearance, shift collar must be flush with end face of spur pinion in both high and low speed positions.* Add or remove shims from pack under sleeve to obtain correct adjustment.
6. Check operation of shift unit. Ten pounds of air may be used to check vacuum type unit by applying air to opposite side of diaphragm, using vent opening on the single line shift unit.

Power Actuated, Front Mounted Type

1. Check bellcrank buttons and remove any scores at operating faces.
2. Place shift fork, collar and shift unit in high speed position. They must be in the same position to install shift unit.
3. Install new gasket and position shift unit with bellcrank in slot of shift shaft. Install lockwashers and capscrews. Do not disturb Allen set screw or travel positioning screw unless shift fork adjustments are needed. If adjustments are required, proceed as follows:
4. With fork and collar shifted to engage helical pinion next to hypoid gear, adjust Allen screw and lock nut in top of carrier so that fork is centered in collar groove within .005".
5. With fork and collar shifted to engage helical pinion away from hypoid gear, adjust hex head screw and lock nut in cross shaft cage so that fork is centered in collar groove within .005". When checking clearance, shift collar must be flush with end face of spur pinion in both high and low speed positions.
6. Check operation of shift unit in same manner as outlined for side mounted shift unit.

Assemble Differential

1. Join high and low speed spur gears to their respective case halves with bolts or rivets as desired. *When new spur gears or differential cases are installed, the case holes may require line reaming with the gear in order to assemble corect size bolts or rivets. When rivets are used they should be upset cold (not heated).*
2. Lubricate differential case inner walls and all parts with axle lubricant, Fig. 14.
3. Install thrust washer and side gear in one case half. Place spider with pinions and thrust washers in position. Install component side gear and thrust washer.
4. Align mating marks, position component case half and draw assembly together with four long bolts or capscrews equally spaced.
5. Check assembly for free rotation of differential gears and correct if necessary.
6. Install and tighten remaining bolts and secure with lock wire.
7. Press differential bearings squarely and firmly on case halves.

Install Bearing Cups In Carrier Leg Bores

1. Temporarily install bearing cups, threaded adjusting rings (where used) and bearing caps and tighten capscrews.
2. Bearing cups must be a hand push fit in bores otherwise bores must be re-worked with a scraper or emery cloth until a hand push fit is obtained. Use a blued bearing cup as a gauge and check fits as work progresses. This applies to all three types of carrier leg bores.
3. On carriers employing adjuster rings, if the rings cannot be turned by hand or with a maximum force of 10 lbs. applied at one end of a 2-ft. wrench (20 ft. lbs. torque) the O.D. should be slightly reduced with a fine mill file or use others that turn more freely. Be sure adjusting rings and threads are free from burrs or nicks.

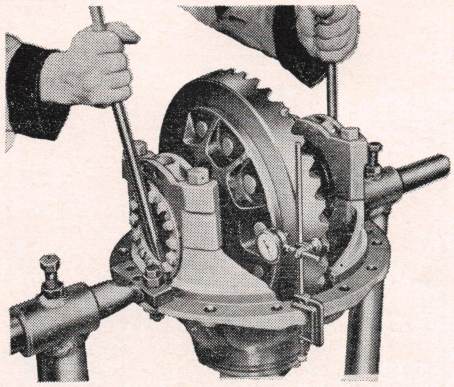

Fig. 15 Checking differential bearing preload

Install Differential

1. After checking related parts, coat bearings with axle lubricant.
2. Place bearing cups over assembled bearing cones and position differential in carrier.
3. On the threaded adjusting ring type (see Fig. 2) insert rings and turn them hand tight against bearing cups. Position bearing caps in place.
4. On type with one threaded adjusting ring and one split ring (see Fig. 3) position split ring in groove of carrier leg and insert threaded adjusting ring on opposite side. Turn threaded ring hand tight against bearing cup. Install bearing caps.
5. With the split ring type (see Fig. 4) insert one ring in carrier leg groove. Move differential over so that face of bearing cup is held tightly against inserted ring. Install opposite split ring by tapping it into groove with a blunt end drift, tapping on lower I.D. of ring. Install bearing caps.
6. Install and tighten carrier leg screws.

Adjusting Differential Bearing Preload

Type With One or Two Threaded Rings

1. On units employing two threaded rings center helical gears in relation to helical pinions by means of the threaded rings.
2. Using a dial indicator as shown in Fig. 15 and starting with a definite amount of end play adjust differential bearings to zero end play. A pair of pinch bars may be used as shown. Rotate assembly several revolutions each time adjusting rings are moved before checking end play to assure normal bearing contact.
3. Tighten adjusting rings 1¾ to 2½ notches (total of both rings) to correctly preload bearings.
4. Install ring locks and capscrews (where used) and install lock wire.

Type Employing Two Split Rings

1. Temporarily install differential in carrier and center between carrier leg grooves.
2. Insert thin split rings making certain that there is clearance between bearing cup faces and rings (do not install bearing caps).
3. Measure end play as shown in Fig. 15.
4. Remove and measure thickness of thin rings. To the total thickness of the two thin rings add the end play figure plus another .017 to .022″ to obtain total thickness of the two thicker rings required to obtain proper bearing preload. Hardened split rings are ground in increments of .005″.
4. When proper bearing preload has been established complete the assembly of the differential. Install unit in axle housing in reverse order of removal.

Single Reduction Thru-Drive Tandem Axles

DESCRIPTION

This type drive, Fig. 1, utilizes a modified conventional single reduction axle for the forward rear axle and a conventional single reduction axle for the rearward axle. A power divider or inter-axle differential is mounted integrally with the forward axle. This type of drive permits a tandem hook-up with a minimum of angles in the drive line.

The pinion bearing preload is adjusted and maintained by a hardened precision spacer between the inner and outer tapered bearings. The differential bearing preload is adjusted and maintained by threaded adjusting rings located in the carrier legs and caps.

The inter-axle differential may be engaged or disengaged by a power actuated shift unit which moves a sliding collar on the through shaft splines. The shift unit is controlled by a selector switch or lever within the cab of the vehicle and may be engaged or disengaged under any normal operating conditions.

The inter-axle differential when engaged (unlocked) divides the engine torque between the forward and rearward axles; when disengaged (locked) it converts the two axles to a through drive type tandem.

DISASSEMBLE

Remove Unit From Housing

1. Disconnect forward and rear propeller shafts.
2. Drain lubricant from axle housing and inter-axle differential.
3. Remove axle shafts as outlined for standard single reduction axles.
4. Remove shift shaft housing assembly.
5. Disassemble and remove shift lever attaching nut, button, lever, cup and spring. The body fit bolt should not be removed.
6. Remove thru-shaft, cage and yoke, Fig. 4. To free cage from case bore it may be necessary to tap yoke with a soft mallet. While thru-shaft assembly is being threaded out, the sliding clutch must be eased along the shaft at the shift lever opening. When thru-shaft clears opening, the clutch may be lifted out.

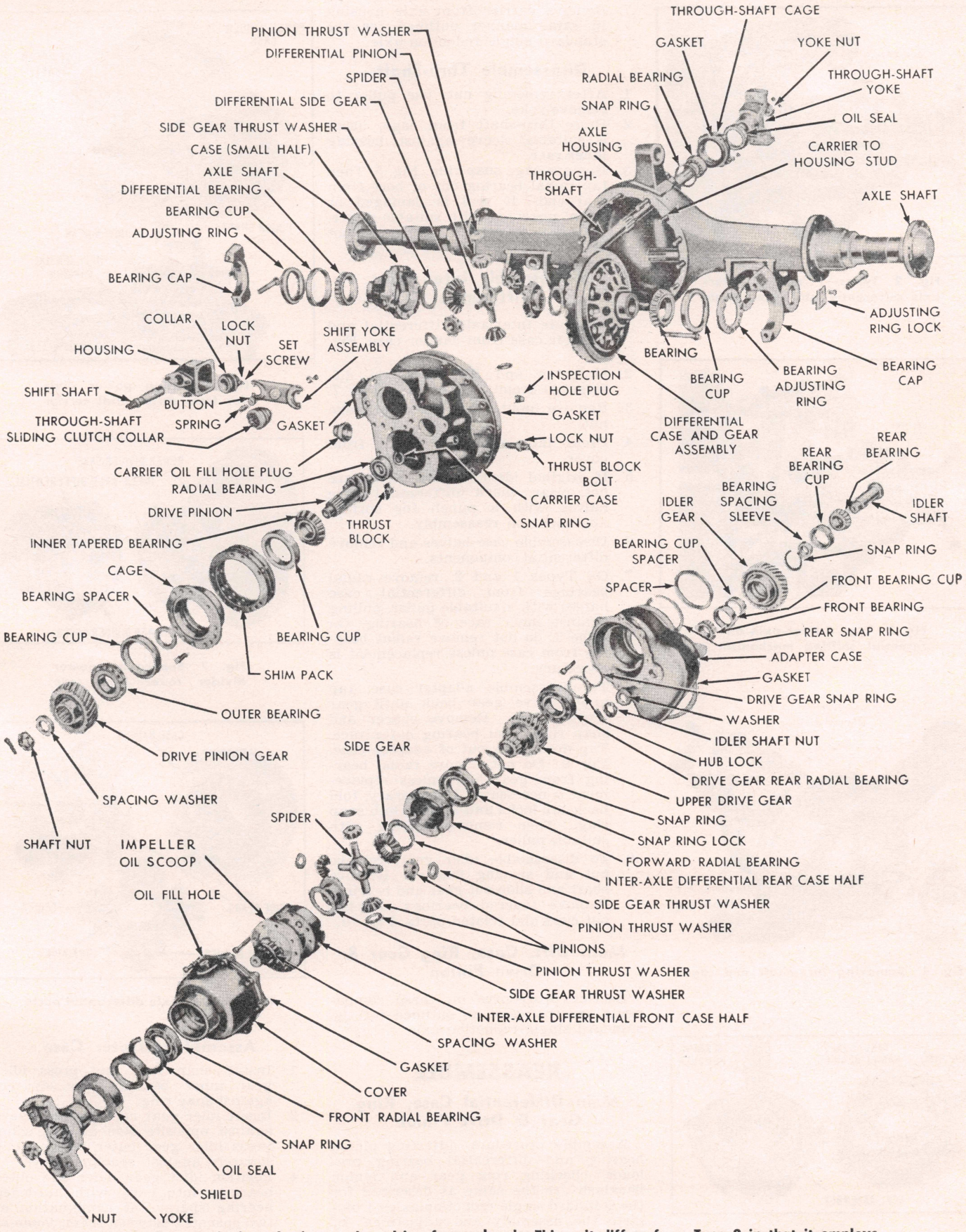

Fig. 1 Type 3 single reduction tandem drive forward axle. This unit differs from Type 2 in that it employs splines instead of dog teeth on the inter-axle differential, as shown in Figs. 2 and 3. Type 1 is similar to Type 2 except that the impeller (oil scoop), oil baffles, etc. used in Type 2 are not employed in Type 1

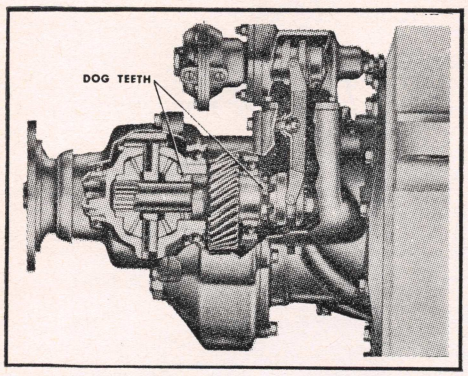

Fig. 2 Types 1 and 2 inter-axle differential shift mechanism

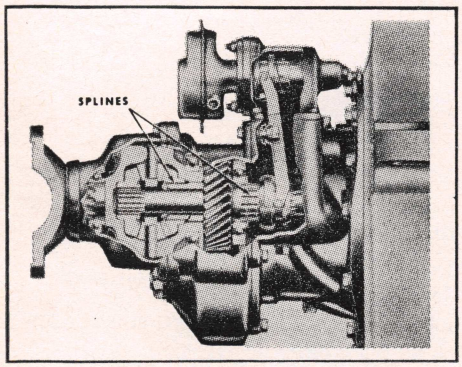

Fig. 3 Type 3 inter-axle differential shifting mechanism

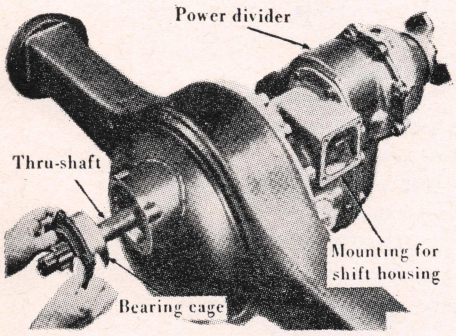

Fig. 4 Removing thru-shaft and cage

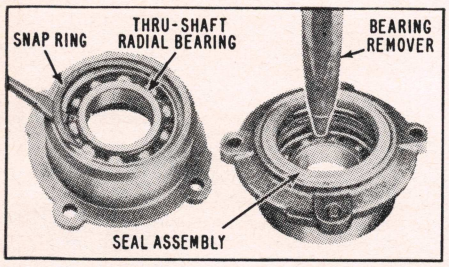

Fig. 5 Removing thru-shaft radial bearing

7. Remove carrier from axle housing in same manner outlined for the standard single reduction axle.

Disassemble Thru-Shaft

1. After removing nut, use puller to remove yoke.
2. Press thru-shaft from cage, using a suitable sleeve against bearing inner race.
3. Remove cage snap ring, Fig. 5. Then tap radial bearing out of bore from seal end. If seal is damaged or worn, press out with suitable sleeve. If seal is in good condition, do not disturb.

Disassemble Inter-Axle Differential

1. Separate inter-axle differential and adapter case from carrier case, Fig. 6.
2. Unfasten and lift inter-axle differential from adapter case, Fig. 7.
3. Remove input shaft flange or yoke nut.
4. Press inter-axle differential from cover.
5. If original identification marks are not clear, mark differential case halves with a punch for correct alignment on reassembly.
6. Disassemble case halves and remove differential components.
7. On Types 1 and 2, remove radial bearings from differential case halves with a suitable puller, pulling against inner race of bearing. On Type 3, do not remove radial bearing from case unless replacement is necessary.
8. To disassemble adapter case, tap upper drive gear back until gear touches case. Remove spacer and snap ring from bearing outer race. Tap drive gear out of adapter case, Fig. 9. Do not remove radial bearing from gear hub unless replacement is necessary. If necessary, fold back tab locks and remove hub snap ring. Then remove bearing with suitable puller.
9. To disassemble idler gear, remove nut and spacing washer. Remove shaft and slide out gear and bearing. Remove tapered bearings and tap out cups and related parts, Fig. 10.

Main Diff. Case, Ring Gear & Drive Pinion

Service procedures on these components are the same as outlined for the standard single reduction axle.

REASSEMBLE

Main Differential Case, Ring Gear & Drive Pinion

Assembly procedure, adjusting pinion bearing and differential bearing preloads, checking ring gear and pinion backlash are the same as described for the standard single reduction axles. Complete the assembly and adjustment of these parts, then proceed with the adapter case and inter-axle as follows:

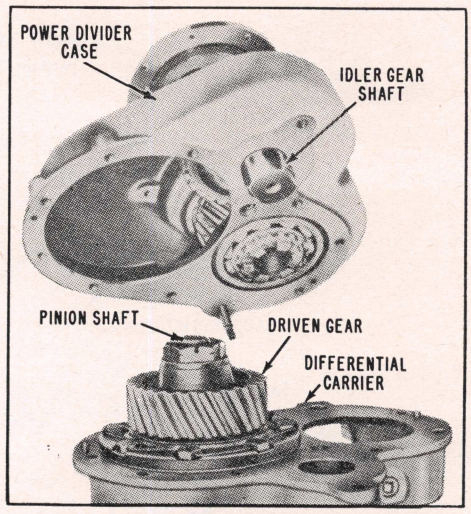

Fig. 6 Lifting power divider from differential carrier

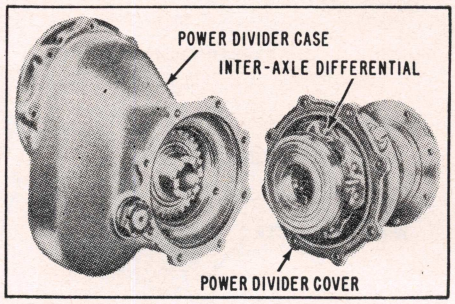

Fig. 7 Separating power divider cover from case

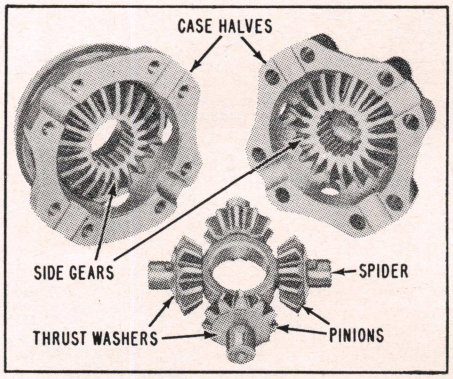

Fig. 8 Inter-axle differential parts

Assemble Adapter Case

1. Install snap ring and press idler gear inner bearing cup squarely against snap ring.
2. Insert idler gear cup spacing sleeve against opposite side of snap ring.
3. Press idler gear outer bearing cup squarely against spacing sleeve.
4. Position idler gear inner and outer bearings into cups with hardened bearing spacer (or combination of two spacers) between them. *Some of the Type 1 drive units do not incorporate the idler bearing spacer or the*

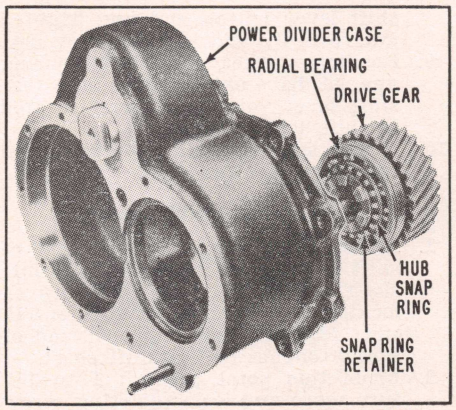

Fig. 9 Drive gear and bearing removed from case

idler shaft "O" ring. These parts should be added to any of the units that do not have them.

5. Slide complete assembly through adapter case drive pinion opening. *On Types 1 and 2, position assembly so that bearings are aligned with adapter case shaft hole. On Type 3, temporarily push the assembly to the far side of the pocket and proceed to install upper drive gear assembly.*
6. On Types 1 and 2, tap idler shaft through idler gear so that inner bearing is squarely against idler shaft shoulder.

Idler Shaft Bearing Adjustment

On Types 1 and 2, this adjustment is made before assembling the upper drive gear. On Type 3, first assemble the upper drive gear, then make the adjustment as follows:

1. Hold adapter case and idler gear securely in a vise with jaws clamped on flatted end of idler shaft.
2. Install washer and nut and torque nut from 350 to 400 lb. ft.
3. Measure idler shaft bearin end play with a dial indicator mounted to adapter case proper with stem set against idler gear face. End play should be .001"-.005".
4. If not within these limits, use a thinner or thicker spacer or combination of two spacers as required.
5. After proper end play has been established, remove washer and nut. Insert "O" ring and reinstall washer and nut. Tighten nut from 350 to 400 lb. ft. and install cotter key.

Assemble Upper Drive Gear

On Type 3, this gear is assembled before adjusting idler shaft bearing, the procedure for all types being as follows:

1. If rear bearing has been removed for replacement, press new bearing on hub using a suitable sleeve against bearing inner race.
2. Install tabbed lock ring and hub snap ring.
3. With radial bearing outer race snap ring removed, position drive gear in case. Tap assembly through bore until gear touches wall of case.
4. Install radial bearing outer race snap ring in the groove. Tap gear back so that snap ring seats in recess in case.
5. On Types 1 and 2, install spacer over outer race of bearing against snap ring.
6. On Type 3, position spacer over bearing with flat toward pinion cage bore. Position idler assembly so that bearings are lined up with idler shaft hole. Tap idler shaft through gear so that inner bearing is squarely against idler shaft shoulder.

Assemble Inter-Axle Differential

1. Lubricate differential case walls and all component parts with axle lubricant.
2. Position thrust washer and rear side gear into rear case half.
3. Place spider with pinions and thrust washers into position.
4. Install forward side gear and thrust washer.
5. Align mating marks, position forward case half and draw together with case capscrews. Types 2 and 3 employ an impeller over forward case half.
6. Tighten case capscrews to correct torque.
7. Check for free rotation of gears and correct if necessary.
8. On Types 1 and 2, install forward radial bearing spacer and press on forward and rear radial bearings.

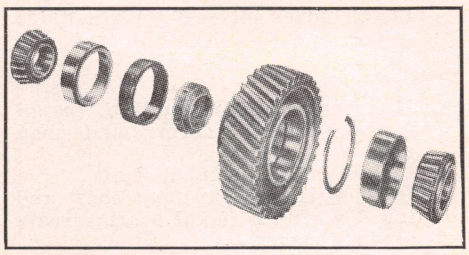

Fig. 10 Idler gear components

Install Inter-Axle Differential

Types 1 and 2

1. If snap ring was removed, reinstall in nose of cover.
2. Install cover-to-case gasket. Position cover over inter-axle differential and tap down with a sleeve until forward radial bearing seats against snap ring.
3. Position cover and differential over upper drive gear hub and tap down until rear radial bearing snap ring seats in adapter case recess. It may be necessary to rotate the assembly slightly to line up the dog teeth.
4. Install capscrews and lockwashers and draw cover and adapter case together. Tighten capscrews to specified torque.

BOLT AND STUD NUTS

LOCATION ON UNIT	DIA. INCH	THDS. NO.	TORQUE — LB. FT. MIN.	TORQUE — LB. FT. MAX.
Shift Unit	3/8"	24	26	29
Carrier to Housing	1/2"	20	82	91
	5/8"	18	160	180
Shift Shaft Adjusting Screw Lock Nut	1/2"	20	40	55
Through-Shaft Yoke and Input Shaft Yoke Nuts	1"	20	300	400
	1 1/4"	18	300	400
	1 1/2"	18	300	400
Differential Case Bolts	1/2"	20	92	102
	5/8"	18	185	205
Bearing Cap Cap Screws	5/8"	11	126	140
	3/4"	10	225	250

CAP SCREWS

LOCATION ON UNIT	DIA. INCH	THDS. NO.	TORQUE — LB. FT. MIN.	TORQUE — LB. FT. MAX.
Diff. Bearing Adj. Lock	5/16"	18	15	17
Through-Shaft Cage	3/8"	16	26	29
Carrier to Adapter Case	3/8"	24	38	42
	7/16"	14	60	66
Inter-Axle Cover	3/8"	24	26	29
	7/16"	14	41	45
Inter-Axle Differential Case	7/16"	14	52	58
	1/2"	13	82	91
Shift Housing	3/8"	16	26	29
Shift Collar Set Screw	3/8"	24	12	16

REPLACEMENT—DIFFERENTIAL GEAR TO CASE BOLTS

TANDEM MODEL CARRIER	SERVICE BOLT	NUT	LOCKWIRE	ORIGINAL RIVET	SPOTFACE DIAMETER	TORQUE — LB. FT. MIN.	TORQUE — LB. FT. MAX.
DHD —	15X-775	N-28-1	LW-1610	RV-7812	1 1/8"	92	102
FHD —	15X-775	N-28-1	LW-1610	RV-7812	1 1/8"	92	102
†LHD —	15X-666	N-29-1	LW-1610	RV-7913	1 3/8"	130	145
†QHD —	15X-666	N-29-1	LW-1610	RV-7913	1 3/8"	130	145
‡LHD —	15X-786	N-210-1	LW-1610	RV-71014	1 3/8"	185	205
‡QHD —	15X-786	N-210-1	LW-1610	RV-71014	1 3/8"	185	205

† Original production had 9/16" rivets and require 9/16" bolts and nuts for service.

‡ Current production has 5/8" rivets and require 5/8" bolts and nuts for service.

Service will no longer stock the original gears incorporating the 9/16" holes.

In case of current gear replacement with original cases it will be necessary to line ream the original cases to .625" to accommodate the larger bolts or rivets.

Torques given apply to parts coated with machine oil; for dry (or "as rec'd") parts increase torques 10%; for parts coated with multi-purpose gear oil decrease torques 10%. Nuts on studs to use same torque as for driving the stud.

Fig. 11 Torque specifications for single reduction thru-drive tandem axles

5. Install cover oil seal with suitable driver.

Type 3

1. If cover was disassembled, install forward radial bearing and snap ring.
2. Install spacer on input shaft.
3. Position cover over input shaft and tap down until radial bearing seats against spacer.
4. Install gasket and position cover and differential over upper drive gear hub. Tap assembly into position. It will be necessary to line up the splines of the drive gear with those of the side gear.
5. Install capscrews and lockwashers and torque to specifications.
6. Install cover oil seal with suitable driver.

Assemble Adapter Case & Inter-Axle Differential to Carrier

1. Mount carrier in stand in upright position. Install gasket and place adapter case over carrier. The idler shaft flat must be lined up with corresponding flat in carrier.
2. Install lockwashers and capscrews and torque to specifications.

Final Assembly

1. Install carrier in axle housing in a manner outlined for standard single reduction axles.
2. Install thru-shaft rear radial bearing into cage and lock in place with snap ring.
3. Press bearing and cage on splined end of thru-shaft with suitable sleeve.
4. Install thru-shaft cage oil seal with suitable driver.
5. Enter thru-shaft and cage with new cage gasket into cage bore at rear of axle housing until forward end of shaft is even with shift lever opening.
6. Install sliding clutch collar over forward end of shaft through shift housing opening. Ease shaft into forward side gear of inter-axle differential, while at the same time passing clutch collar onto collar splines.
7. Install thru-shaft cage capscrews and washers and torque to specifications.
8. Install over shift lever bolt the shift lever spring, cup and lever. Lever inner yoke must be properly located in collar groove at this time. Install shift lever button and nut. Tighten nut securely and install cotter key.
9. Position gasket and shift housing against drive unit, making sure that shift lever yoke is properly located in shift collar groove.
10. Install shift housing capscrews and torque to specifications.

Adjusting Shift Shaft

1. Adjust positioning screw at rear of shift housing as follows: With shift shaft moved back its full travel, locking the inter-axle differential, turn adjusting screw in until end of screw touches end of shift shaft.
2. From this point proceed 1 to 1¼ turn more and lock adjusting screw with jam nut. This will allow approximately .012" clearance between the yoke and groove of collar and thus eliminate yoke and collar wear. The shift collar provides a definite stop against housing wall when shifted in the opposite direction.

Install Thru-Shaft Yoke

1. Install yoke on splines with suitable sleeve. Install washer and nut.
2. By using a holder on yoke, tighten yoke nut to proper torque and install cotter key.

Double Reduction Thru-Drive Tandem Axles

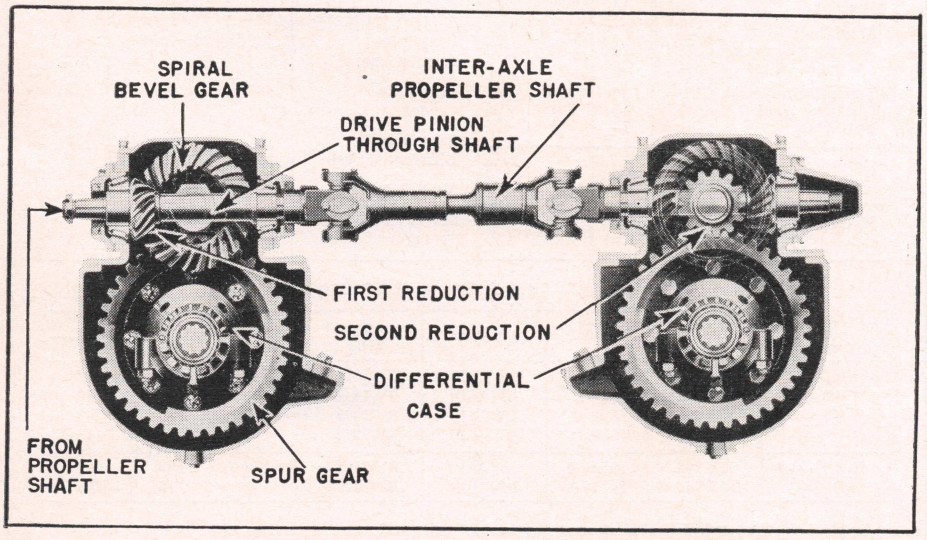

Fig. 1 Timken double reduction, top-mounted thru-drive axles. Both hypoid and spiral bevel gears are used in the first reduction. Either straight spur or helical gears are used in the second reduction

In these units, Fig. 1, tapered roller bearings support the forward and rear ends of the thru-shaft and pinion assembly of spiral bevel gear units. Bearing preload is adjusted and maintained by shim packs between carrier machined surfaces and bearing covers. Yokes or flanges, held in place by thru-shaft nuts, press against the bearing cones or spiral bevel pinion splined to thru-shaft.

The thru-shafts of hypoid gear drive units are supported at the forward end by tapered roller bearings in a cage and at the rear end by a straight roller bearing. Pinion bearing preload is adjusted and maintained by a hardened precision spacer between inner and outer tapered bearings which are held in place on the thru-shaft by separate thru-shaft nuts.

Hypoid gear top-mounted forward drive units may be equipped with an inter-axle differential of the planetary type which divides engine torque between the forward and rear axles. The differential is equipped with a lock-up device which converts the tandem assembly to a thru-drive type tandem. The lock-up is actuated by an air chamber and is controlled in the vehicle cab. It can be engaged and disengaged under all normal operating conditions. Fig. 2 illustrates the early design shift unit, while Fig. 3 is the current design.

DISASSEMBLE

During the disassembly process, be sure to keep any shims found with parts intact and identified so that when reassembling, adjustment of unit involved will be facilitated.

1. Drain axle and inter-axle differential housings.
2. Remove axle shafts and carrier from housing.
3. Match mark one differential carrier leg and bearing cap for identification on reassembly.

4. Lift out differential. Before dismantling differential, match mark case halves for proper alignment on reassembly.
5. Remove pinion and thru-shaft on models not equipped with inter-axle differential.
6. If inter-axle differential is used, remove shift unit.
7. Remove inter-axle differential bearing and cover assembly. Hoist inter-axle differential out with a chain fall.
8. Disassemble thru shaft.
9. Disassemble inter-axle differential.
10. Disassemble cross shaft.

REASSEMBLY

Service Note

The thru-shaft, pinion and bearing assembly of the spiral bevel type drive units must be installed in the carrier before the cross shaft assembly is installed. This permits determining the thickness of shim packs that control pinion bearing preload without interference of the cross shaft assembly. The thru-shaft assembly is then removed and the cross shaft assembly installed. Cross shaft bearing preload must be established at this time before final installation of the thru-shaft assembly with previously determined shim packs.

The cross shaft assembly of hypoid gear units must be installed in the carrier first so cross shaft bearing preload can be established without interference of the thru-shaft and pinion assembly. The thru-shaft, pinion, bearing and cage may be assembled at the bench and then installed in the carrier.

Assemble Spiral Bevel Pinion & Thru-Shaft

1. Press tapered bearing on pinion.
2. Coat pinion and thru-shaft splines with heavy grease and press parts together. *Press parts together about ¼" to ⅜", then relieve press pressure to permit them to realign themselves to prevent distortion and damage. Continue the pressing operation until parts are correctly assembled.*
3. Install pinion, bearing and thru-shaft in drive unit. Install pinion bearing cup with suitable sleeve, Fig. 4.
4. Install spacer (if used) over splined end of thru-shaft and tighten nut on spacer end of thru-shaft.
5. Coat seal with non-hardening sealing compound and install in bearing covers. Lubricate sealing element of seal.
6. Install bearing cover and seal assembly (where used) and original shim pack over splined end of thru-shaft. Tighten cover nuts.
7. Install bearing opposite pinion firmly against shaft shoulder.
8. Install bearing cup in drive unit, rotating shaft to position all bearing rollers.
9. Install bearing cover and seal over original shim pack and tighten stud nuts.

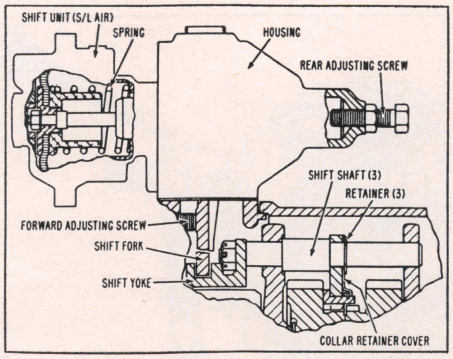

Fig. 2 Shift unit assembly (early models)

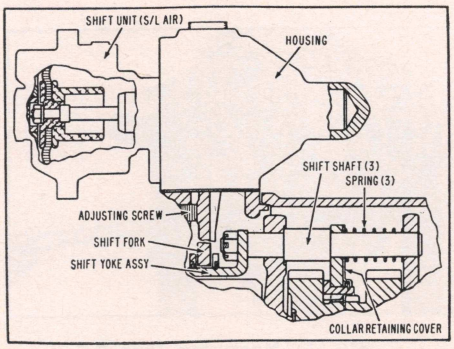

Fig. 3 Shift unit assembly (later models)

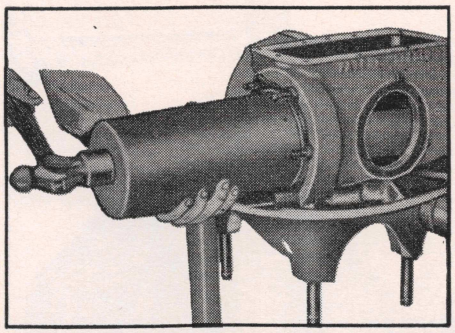

Fig. 4 Installing pinion, bearing and thru-shaft assembly with sleeve shown

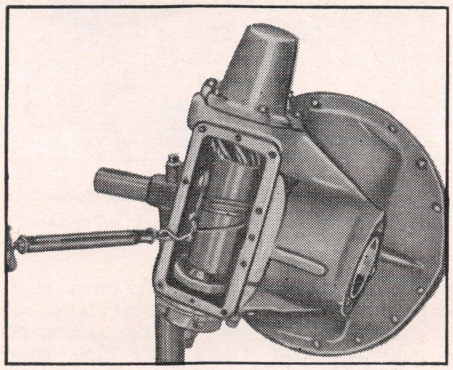

Fig. 5 Measuring thru-shaft bearing preload

Measuring Thru-Shaft Bearing Preload

1. As shown in Fig. 5, wrap strong cord around thru-shaft and pull on a horizontal line with a pound scale.
2. The preload specification for tapered roller bearings at opposite ends of thru-shaft is zero thru-shaft end play to 5 inch pounds torque.
3. Alter shim pack under bearing cover at end opposite pinion so there is no thru-shaft end play when measured with a dial indicator and so bearing preload torque does not exceed 5 inch pounds.
4. For example, assuming thru-shaft diameter is 1½", the radius is ¾" and with 4 pounds pull on scale, preload torque is 3 inch pounds.
5. Read rotating pounds pull (not starting pull). If preload torque is not within specified limits, add shims under bearing cover at end opposite pinion to decrease torque or remove shims at same location to increase preload torque.
6. Complete bearing adjustments before installing flanges or yokes.
7. Remove thru-shaft. Keep both shim pack with their respective covers to maintain established bearing preload.

Assemble Cross Shafts

Check I.D. of sleeve and O.D. of radial bearing and replace either or both of these parts if there is more than .006" clearance between them. When new, these parts have a clearance of .0024" to .004". The radial bearing must be free to float in the sleeve.

Check the I.D. of the bearing bore on older drive units that do not have replaceable sleeves. If the I.D. is more than .006" larger than the bearing O.D., replace carrier and cap assembly with the newer type carrier and cap that incorporates replaceable sleeves.

If sleeve is to be replaced, press new sleeve firmly against housing shoulder. Drill hole for lock screw and remove burrs from sleeve. Install and tighten lock securely or install pin and stake in place.

Assemble Type 1 Cross Shaft

Gear Journal Fit to Cross Shaft

1. Install 6 studs at cross shaft flange. Assemble radial bearing on gear hub with large radius of bearing inner race toward back of gear.
2. Install bearing washer on gear hub against bearing with chamfer of spacer away from bearing. Install spacers with I.D. chamfer so chamfer is next to radius at root of pinion teeth. *A large flat washer is used at this location when O.D. of pinion teeth is smaller than I.D. of bearing.*
3. Coat I.D. of gear with heavy grease. Install gear, bearing and spacer assembly in drive unit sleeve and block up to hold in place.
4. Inspect entering end of cross shaft and remove any nicks or burrs. Coat O.D. of shaft and I.D. of gear with heavy grease.

5. Position housing in press with thru-shaft chamber down and gear supported on suitable sleeve.
6. Align key in cross shaft with keyway in gear hub and press shaft firmly against gear, bearing and spacer. *Continue pressing to exert 10 to 20 tons pressure in excess of that required for secure assembly.*
7. Install tapered bearing cage original shim pack (which controls gear position) over cross shaft cage studs.
8. Apply graphite lubricant to cross shaft tapered bearing journal and assemble inner and outer bearings, using suitable sleeves.
9. Install cage and bearing assembly in drive unit, pressing against outer bearing cone with suitable sleeve. Be sure oil holes in cage are aligned with oil holes in drive unit.
10. Assemble bearing retainer plate with two capscrews and secure with lock wire.
11. Install bearing cage cover over original shim pack (which control tapered bearing preload) over studs next to cage flange.
12. Assemble bearing cage cover, lock washers and stud nuts.
13. Wrap a strong cord around spur pinion, Fig. 6, and pull on a horizontal line on pound scale to measure cross shaft bearing preload torque. Proper perload torque is 5 to 15 inch pounds, which is equivalent to 2½ to 7½ pounds pull on scale.
14. Read rotating pull (not starting pull). If torque is not within limits, add shims between cover and cage to decrease, or remove shims to increase torque.
15. Install thru-shaft and pinion.
16. Adjust pinion and gear to secure correct gear tooth contact and backlash.

Assemble Type 2 Cross Shaft

Gear Splined to Hub, Hub Keyed to Cross Shaft

1. Apply graphite to cross shaft tapered bearing journal. Press inner bearing firmly against shaft shoulder with suitable sleeve.
2. Assemble gear to hub, aligning 6 gear-to-hub capscrew holes. Tighten screws securely.
3. Position drive unit on press bed with thru-shaft chamber up, and install radial bearing in drive unit sleeve. Large radius of bearing inner race must be toward bevel gear.
4. Support inner race of radial bearing with sleeve and press gear and hub assembly into bearing.
5. Turn drive unit over in press with thru-shaft chamber down, and support gear, hub and bearing assembly on sleeve with notches in end that fit over capscrew heads.
6. Inspect entering end of cross shaft and remove any nicks or burrs. Coat O.D. of shaft with heavy grease.
7. Align keyway in hub with key in cross shaft and press shaft and inner tapered bearing assembly firmly against hub.
8. Remove drive unit from press and install 6 cross shaft cage studs.

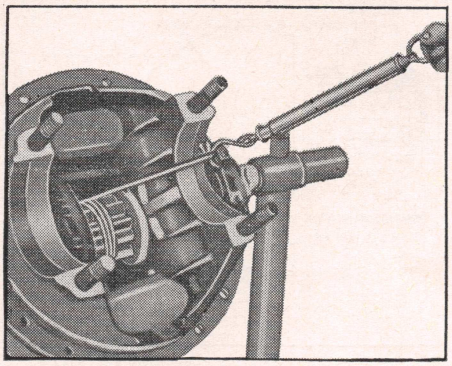

Fig. 6 Measuring Type 1 cross shaft bearing preload

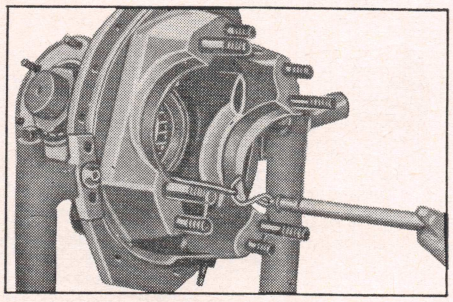

Fig. 7 Measuring Type 2 cross shaft bearing preload

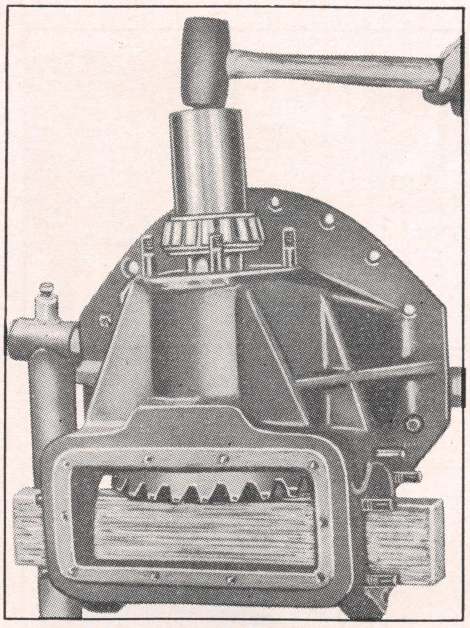

Fig. 8 Install inner bearing on Type 3 cross shaft, using wood block as shown

9. If tapered bearing cup has been removed from cross shaft cage, reassemble in press using sleeve to install cup firmly against cage shoulder.
10. Install original shim pack (which controls gear backlash) over studs, and cross shaft cage over shim pack, *aligning oil holes in cage with oil holes in drive unit.*
11. Install outer tapered bearing using suitable sleeve.
12. Install cross shaft bearing adjusting nut. Tighten nut as cross shaft is revolved to position all bearing rollers.
13. Measure cross shaft bearing preload torque by wrapping strong cord around spur pinion, Fig. 7, and pull on a horizontal line with pound scale. Preload torque should be 5 to 15 inch pounds which is equivalent to 2½ to 7½ pounds pull on scale.
14. Read rotating pull (not starting pull). If torque is not within limits, tighten bearing adjusting nut to increase, or loosen nut to decrease torque. Back off adjusting nut ¼ to ⅓ turn. Then install nut lock, flat washer and jam nut. Tighten jam nut to 500 ft. lbs. Recheck bearing preload. When correct, bend flat washer over jam nut.
15. Install thru-shaft and pinion.
16. Adjust pinion and gear to secure correct gear tooth contact and backlash.
17. Remove stud nuts and flat washers. Install bearing cage cover gasket, cover, stud nuts and lock washers.

Assemble Type 3 Cross Shaft

Gear Splined to Cross Shaft

1. Install radial bearing in drive unit with large radius of bearing inner race toward bevel gear.
2. Position drive unit in press with thru-shaft chamber up. Coat O.D. of shaft with heavy grease and press parts together about ¼″ to ⅜″. Then release press pressure to permit parts to align themselves to prevent distortion and damage. Continue pressing operation until parts are properly assembled.
3. Align gear and cross shaft capscrew holes and assemble gear to shaft. Torque capscrews to 65-85 ft. lbs.
4. Block up gear as shown in Fig. 8. Apply graphite lubricant to cross shaft tapered bearing journal. Install inner bearing firmly against shaft shoulder with suitable sleeve.
5. If tapered bearing cup has been removed, press cup firmly against shaft shoulder.
6. Install original shim pack (which controls gear backlash) over cross shaft cage studs, and cage over shim pack, aligning oil holes in cage with oil holes in drive unit. Install 4 evenly spaced nuts over thick flat washers to hold assembly in place. Tighten nuts securely.
7. Install outer tapered cross shaft bearing with suitable sleeve.
8. Install bearing adjusting nut. Tighten nut as cross shaft is being revolved to correctly position all bearing rollers.
9. Measure cross shaft bearing preload. Wrap strong cord around spur pinion, Fig. 7, and pull on horizontal line with pound scale. Preload torque is 5 to 15 inch pounds which is equivalent to 2½ to 7½ pounds pull on scale. If preload is not within limits, tighten bearing adjusting nut

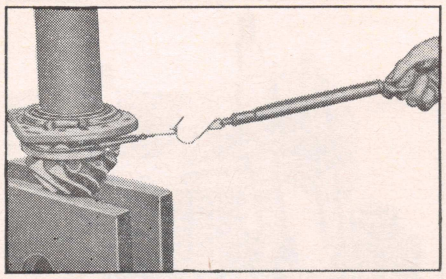

Fig. 9 Measuring pinion bearing preload on hypoid gear unit

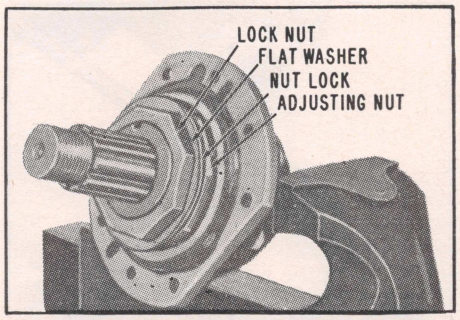

Fig. 10 Position of pinion locking components on hypoid gear units

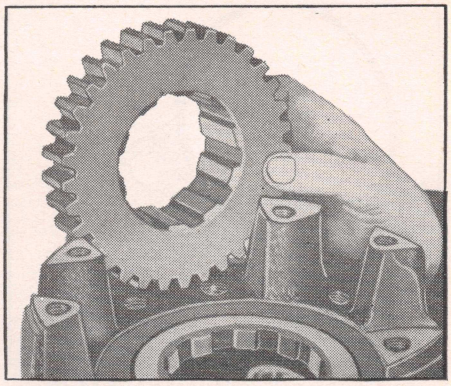

Fig. 11 Assemble rear gear against insert with locking teeth up

to increase, or loosen nut to decrease preload torque.

10. Back off adjusting nut ¼ to ⅓ turn. Install nut lock, flat washer and jam nut. Tighten jam nut to 500 ft. lbs. Recheck bearing preload. When correct, bend flat washer over jam nut.
11. Install gear cover spacers, cover and 3 capscrews. Install pinion and thru-shaft. Adjust pinion and gear for correct gear backlash and tooth contact.
12. Remove stud nuts and flat washers. Install cage cover gasket, cover, nuts and lockwashers.

Install Hypoid Pinion & Thru-Shaft

1. Press pinion bearing cups in cage firmly against shoulder.
2. Coat thru-shaft O.D. and rear bearing inner race I.D. with heavy grease. *Press rear bearing inner race against rear shoulder of thru-shaft of forward carriers and rear carriers that have double splined end shafts. On rear carriers with short single end thru-shafts, install rear bearing inner race retainer, then press race in place and install outer retainer.*
3. Coat pinion and thru-shaft splines with heavy grease. Begin assembly operation in a press and press parts together ¼″ to ⅜″. Then relieve press pressure to permit parts to realign themselves to prevent distortion and damage. Continue pressing operation until parts are correctly assembled.
4. Lubricate all bearing journals with a few drops of engine oil and press inner pinion bearing firmly in place.
5. Position original bearing spacer next to bearing, being sure O.D. chamfer is toward outer bearing.
6. Install cage and cup and outer bearing. Press bearing firmly against selective spacer with suitable sleeve, rotating cage to assure normal bearing contact.
7. Measure pinion bearing preload torque while in press under 9 tons pressure. Wrap strong cord around cage pilot, Fig. 9, and pull on a horizontal line with a pound scale. The preload torque should be 5 to 15 inch lbs. which is equivalent to 2½ to 7½ pounds pull on scale. Use a thinner spacer to increase or a thicker spacer to decrease preload.
8. Remove assembly from press and install and tighten inner nut. Assemble as shown in Fig. 10. When properly tightened, bend lock washer over nut flat.
9. Install thru-shaft rear bearing with suitable sleeve. Check position in forward carrier with cover and seal assembly. In rear carriers with long thru-shaft (both ends splined) check position with cast end cover. In rear carriers with short thru-shaft, use large bearing spacer as a gauge.
10. Loosely install two guide studs in cage capscrew holes to aid reassembly. Position original shim pack over studs so oil holes are aligned. Carefully tap pinion, cage and thru-shaft in place.
11. Install and tighten 4 capscrews over flat washers to hold pinion cage firmly in place while checking hypoid tooth contact. Alter shim packs under cross shaft bearing cage to secure correct tooth contact.
12. Coat pinion oil seal with non-hardening sealing compound and install in cover. Lubricate sealing element.
13. Remove 4 capscrews and guide studs. Coat outer machined surface of cage and inside of cover with gasket cement. Install new gasket on cage flange.
14. Install cover and seal. Apply gasket cement to all covers and mating surfaces and install covers.
15. On rear drive units with thru-shafts splined at both ends, assemble parts as follows: Narrow spacer next to rear bearing inner race. Wide spacer next to narrow spacer. Nut washer, then rear nut.
16. Install forward yokes or flanges. Install narrow spacer at rear end of forward carrier thru-shaft, then yoke or flange.

Assemble Inter-Axle Differential

Assemble inter-axle differential as shown in Figs. 11 to 25 . Then proceed with the assembly as follows:

1. Position new gasket on cover and install bearing and seal retainer.
2. Carefully inspect completed assembly to be sure capscrew ends do not interfere with shift yoke or shift rings.
3. Install yoke or flange, washer and nut.

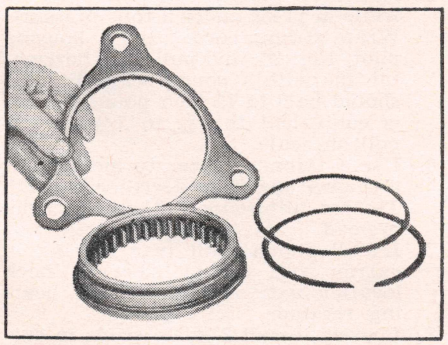

Fig. 12 Assemble yoke to shift collar

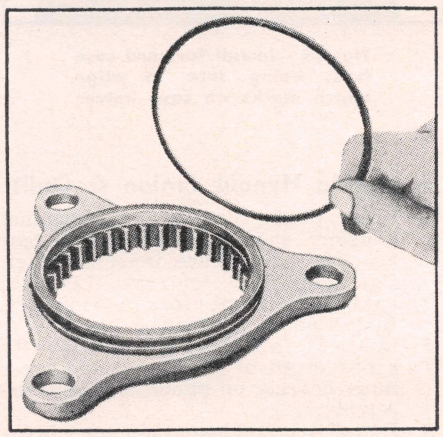

Fig. 13 Assemble spacer over collar yoke

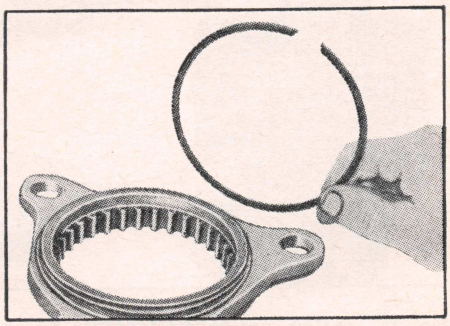

Fig. 14 Install retainer in shift collar groove

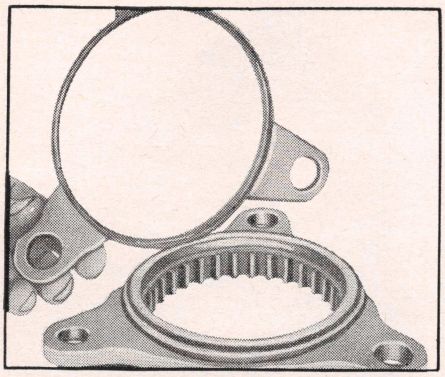

Fig. 15 Position stamped collar retainer cover over retainer

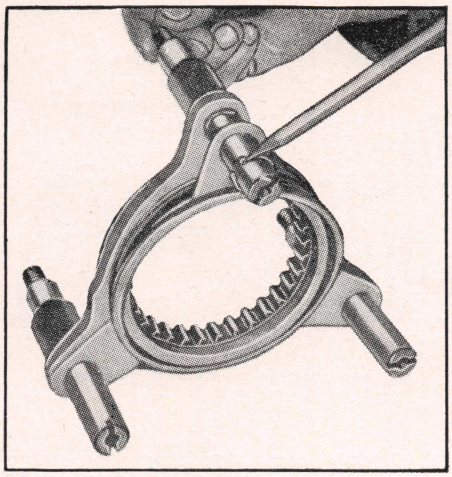

Fig. 16 Assemble shift shafts in collar and yoke and install snap rings in grooves as indicated

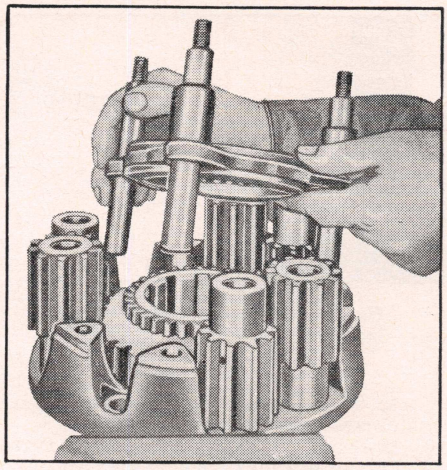

Fig. 17 Install pinions and shift yoke, collar and shaft assemblies, mating internal teeth of collar with teeth of rear side gear

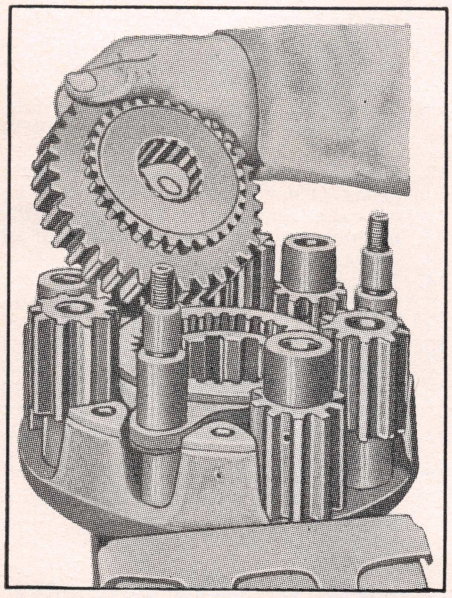

Fig. 18 Install forward differential gear. Turn gears to be sure all parts are correctly assembled and free-moving. Install forward thrust washer

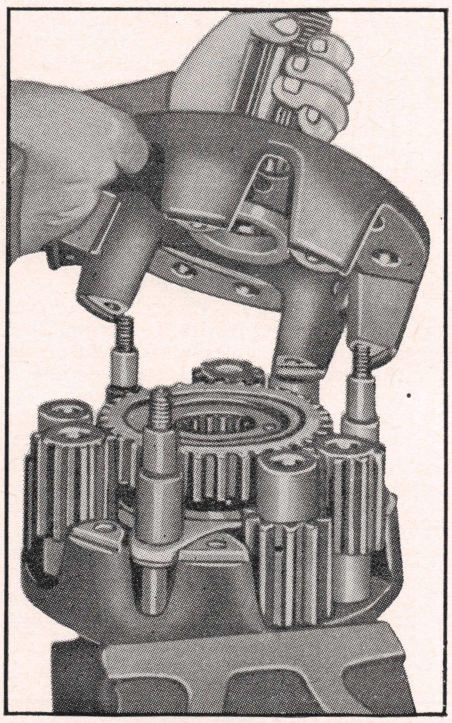

Fig. 19 Install forward case half, being sure to align match marks on case halves

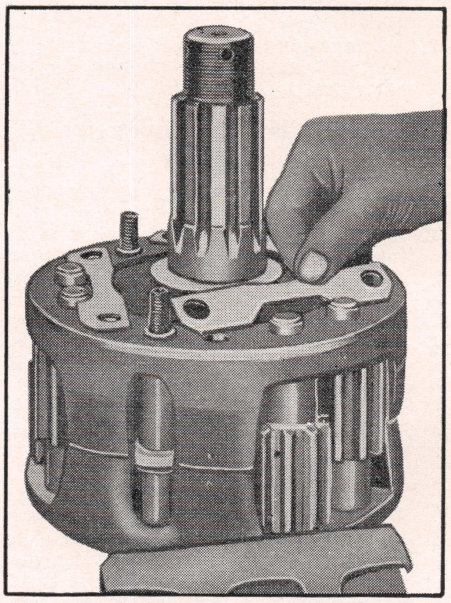

Fig. 20 Install pinion shaft locks

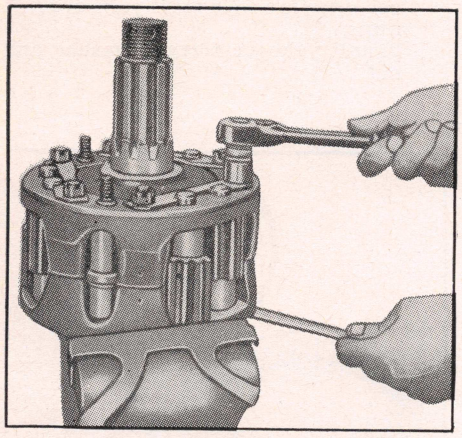

Fig. 21 Fasten case halves together. Check assembly for free movement by rotating pinions

Assemble Hypoid Pinion & Quill

1. Press pinion bearing cups against housing shoulder. Assemble rear bearing inner race inner retainer. Coat quill O.D. and race I.D with heavy grease and press race in place. Install outer retainer.
2. Lubricate all bearing journals with a few drops of engine oil and press inner bearing on pinion and quill assembly.
3. Install original spacer on inner bearing with O.D. chamfer of spacer toward outer (forward) bearing.
4. Position housing and cup assembly on pinion. Press bearing firmly against selective spacer with suitable sleeve, rotating housing to assure normal bearing contact.
5. Measure pinion bearing preload while in press under 9 tons pressure. Wrap strong cord around housing pilot, Fig. 26, and pull on a horizontal line with a pound scale. Preload should be 5 to 15 inch pounds which is equivalent to 2½ to 7½ pounds pull on scale.
6. Use a thinner spacer to increase or a thicker spacer to decrease preload. Tighten adjusting nut and recheck preload.
7. Install pinion quill rear bearing in carrier with suitable sleeve. Check location with thru-shaft ball bearing retainer.
8. Loosely install 2 guide studs in carrier if capscrews are used to hold

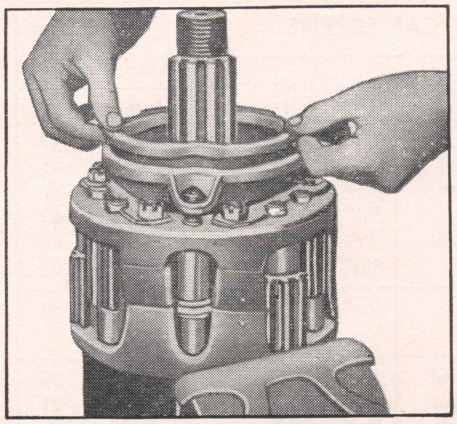

Fig. 22 Install shift collar. Tighten nuts to 65-85 ft. lbs. Be sure shift collar and shafts work up and down freely. If necessary rap assembly at several points on case to free up parts

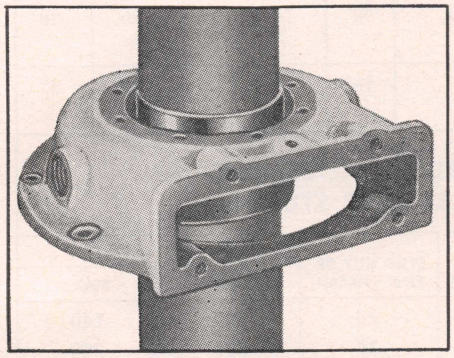

Fig. 23 Install ball bearing in housing cover.

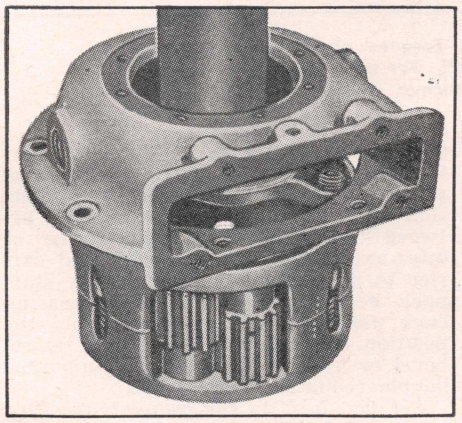

Fig. 24 Assemble cover and bearing assembly to differential. Use a small sleeve over input shaft against bearing inner race. Rotate cover to be sure it clears differential

housing in place. Position original shim pack over studs so oil holes are aligned. Carefully tap pinion, housing and gear assembly in place.

9. Install 4 equally spaced capscrews or stud nuts to hold assembly in place while checking hypoid gear tooth contact. Alter shim pack under cross shaft bearing cage and inter-axle differential housing to secure correct tooth contact.
10. Install remaining capscrews or stud nuts and secure with lock wire.

Install Inter-Axle Differential

1. Turn carrier so pinion and quill assembly is in vertical position and loosely install 3 guide studs in differential housing. Position gasket in place and install differential and cover. Revolve differential back and forth to engage splines of pinion with rear gear. Install capscrews.
2. Revolve differential to be sure it is free turning. If not, remove it and inspect parts.
3. Check position of oil scoop for interference at helix baffle at left inside housing of early models.
4. Install and tighten 2 capscrews at shift lever housing. Secure with lock wire.

Install Shift Unit Housing

1. Hold shift unit in vise and install push rod in housing and fork, Fig. 27. Be sure round button of fork faces front. Assemble push rod in place with sleeve.
2. Place copper gasket over end of push rod and install diaphragm assembly. Hold push rod with screwdriver while starting nut over lock washer. Be sure flats of push rod fit in slot of diaphragm insert as nut is tightened. Tighten nut to 4-6 ft. lbs. Install shift unit cover plug.
3. Attach assembly to cover with 2 capscrews over lock washers. Install 2 tapered dowels, special lock washers and stud nuts.

Adjust Shift Fork (Late Models)

This adjustment is for later models without shift shaft springs that have both forward and rear adjusting screws. Always check shift fork location with feeler gauge, Fig. 28, to be sure there is .010″ clearance (minimum) at guide rings or groove.

Lockout Disengaged, Forward Adjusting Screw

1. Back off adjusting screw lock nut so screw is free turning.
2. Shift assembly to disengaged position with power chamber.
3. Turn in adjusting screw until it is finger-tight against fork.
4. Turn in screw ½ revolution more to center fork in groove.
5. Tighten lock nut.

Lockout Engaged, Rear Adjusting Screw

1. Back off adjusting screw lock nut so screw is free turning.
2. Shift assembly to engaged position with power chamber. Be sure shift collar is fully engaged with rear gear.
3. Turn in screw until it is finger-tight against push rod.
4. Turn in screw ½ revolution more to center fork in groove. Tighten lock nut.

Adjust Shift Fork (Early Models)

This adjustment is for early models that have shift shaft springs and only a forward adjusting screw. With lockout disengaged, adjust as follows:

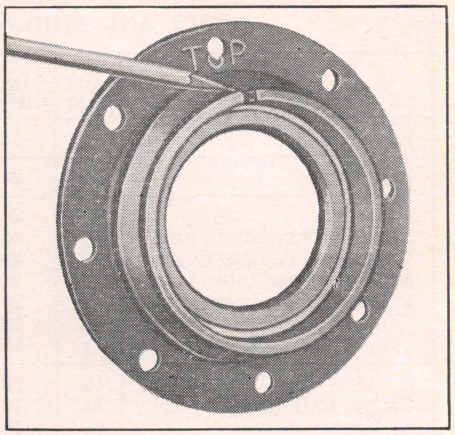

Fig. 25 Install retainer with slot indicated up, aligned with oil hole in cover

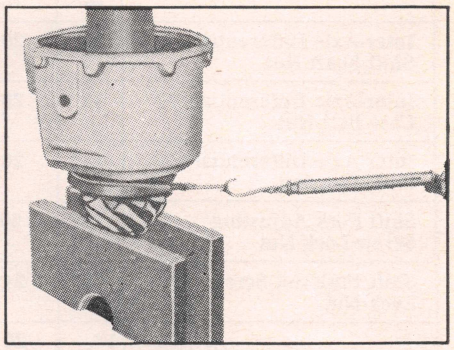

Fig. 26 Measuring pinion bearing preload

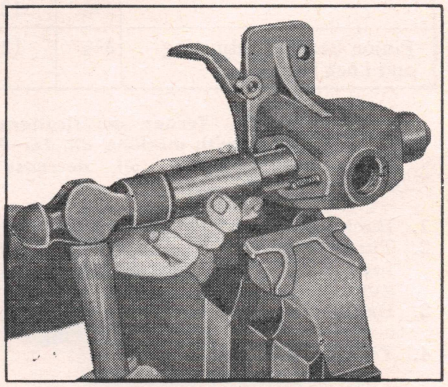

Fig. 27 Installing shift unit push rod

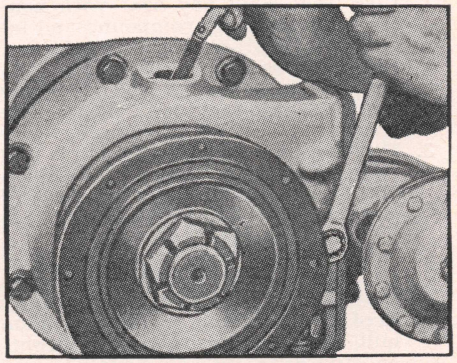

Fig. 28 Adjusting shift fork, using feeler gauge

BOLT AND STUD NUTS

LOCATION	DIAMETER	NO. THREADS	NUT THICKNESS	TORQUE—LB. FT. MIN.	TORQUE—LB. FT. MAX.
Push Rod Nut	5/16"	18		4	6
Shift Unit	3/8"	24		39	42
Pinion, Thru-Shaft and Cross Shaft Bearing Cages and Covers and Inter-Axle Differential Housings	3/8"	24		39	42
	7/16"	20		61	66
	1/2"	20	3/8"	73	80
	1/2"	20	7/16"	94	102
	1/2"	20		94	102
	9/16"	18		132	145
	5/8"	18		186	205
Carrier to Housing	1/2"	20		94	102
	5/8"	18		186	205
	3/4"	16		325	360
Axle Differential Case Bolt	1/2"	20		94	102
	9/16"	18		132	145
	5/8"	18		186	205
	3/4"	16		325	360
Inter-Axle Differential Shift Shaft Nut	1/2"	20		65	85
Inter-Axle Differential Case Bolt Nut	1/2"	20		94	102
Inter-Axle Differential Shift Housing	7/16"	20		61	66
Shift Fork Adjusting Screw Lock Nut	1/2"	20	5/16"	40	55
Shift Fork Set Screw Lock Nut	3/8"	24		30	33
Pinion Shaft, Thru-Shaft and Inter-Axle Differential Case Shaft	1".	20		300	400
	1 1/4"	18		700	900
	1 1/2"	18		800	1100
	1 1/2"	12		800	1100
	1 3/4"	12		800	1100
Pinion Bearing Adjusting and Lock Nut	3 3/8"	12		1000	1200

CAP SCREWS

LOCATION	DIAMETER	NO. THREADS	TORQUE—LB. FT. MIN.	TORQUE—LB. FT. MAX.
Differential Bearing Adjusting Nut Lock	5/16"	18	15	17
	1/2"	13	85	91
Cross Shaft Bearing Lock	7/16"	14	42	45
	1/2"	20	73	80
	9/16"	12	92	101
Inter-Axle Differential Shift Unit Housing	7/16"	14	54	58
Pinion, Thru-Shaft and Cross Shaft Bearing Cages and Covers and Inter-Axle Differential Housings	3/8"	16	26	29
	1/2"	13	85	91
	9/16"	12	120	129
	5/8"	11	168	180
Inter-Axle Differential Housing Cover and Bearing Retainer	3/8"	24	30	33
	7/16"	14	54	58
Differential Carrier Top, Rear and Side Covers	3/8"	16	26	29
Inter-Axle Differential Shift Fork Set Screw	3/8"	24	30	33

AXLE DIFFERENTIAL BEARING-CAP CAP SCREWS OR STUD NUTS

CAP SCREW OR STUD NUT DIAMETER	CAP SCREW OR COARSE STUD THREAD	STUD NUT OR FINE THREAD	TORQUE—LB. FT. MIN.	TORQUE—LB. FT. MAX.
5/8"	11	18	127	140
3/4"	10	16	230	250
7/8"	9	14	345	370
7/8"	14	14	375	415
1"	14	14	570	630

Fig. 30 Torque specifications for double reduction thru-drive tandem axles. Torques given apply to parts coated with machine oil. For dry (or "as received") parts increase torques 10%. For parts coated with multi-purpose gear oil decrease torques 10%. Nuts on studs to use same torque as for driving the stud

1. Back off adjusting screw lock nut.
2. Turn screw in finger-tight against fork. This forces fork against inner guide ring.
3. Back off screw 1/2 revolution to center fork between guide rings.
4. Tighten lock nut.

Install Thru-Shaft

1. Coat seal body and seat with non-hardening sealing compound and install in cover with suitable sleeve. Lubricate sealing element.
2. Install thru-shaft ball bearing firmly against shaft shoulder and assemble shaft and bearing in retainer.
3. Position new gasket over studs and install shaft assembly. Be sure thru-shaft splines mesh with forward gear of inter-axle differential. Do not force in place.
4. Install cover and seal with new gasket. Alternately tighten 4 evenly spaced stud nuts to draw assembly in place and correctly position pinion quill rear bearing. Install and tighten stud nuts.
5. Install thru-shaft yoke or flange.

Tooth Contact & Gear Backlash

Tooth contact may be checked as outlined in the *Single Reduction Axle* section. Spiral bevel gear first reduction units have shim packs between the forward and rear thru-shaft tapered bearing covers and the carrier to control pinion position. Hypoid gear first reduction units have a single shim pack between the pinion cage and carrier or inter-axle differential housing and carrier to control pinion position. A shim pack between the cross shaft bearing cage flange and carrier controls the position of the first reduction spiral bevel or hypoid gear in all top-mounted double reduction drive units.

Set backlash to the amount specified on gear O.D. When backlash is not specified on gear set to .006-.012".

Be sure all bearing preloads are within specified limits before checking tooth contacts. Transpose equal amounts of shims between front and rear pinion bearing covers of spiral bevel drive units to maintain correct bearing preload while adjusting tooth contact. Add or remove shims between pinion cage or inter-axle differential housing of hypoid drive gear units to alter pinion location. Change the location of spiral bevel or hypoid gear by altering the thickness of the shim pack between the cross shaft bearing cage flange and carrier.

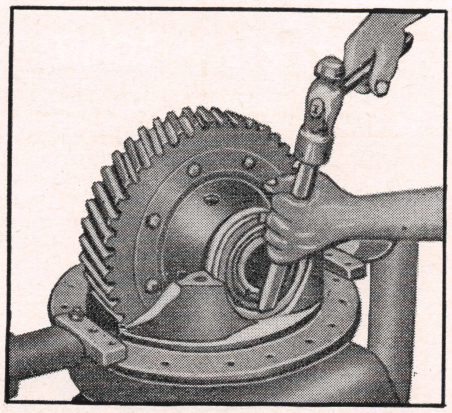

Fig. 29 Installing split ring

In hypoid gearing the actual backlash changes .008″ for each .010″ movement of the gear. In spiral bevel gearing, the actual backlash changes .007″ for each .010″ movement of the gear.

Install Axle Differential

1. Press differential bearings firmly against case shoulders. Coat inside of case and all differential parts with rear axle lubricant.
2. Assemble differential case half and gear. Install side gear thrust washers, side gears and pinion gears, thrust washers and spider.
3. Note case alignment marks and assemble opposite case half. Hold assembly together with 4 bolts and nuts and check for free rotation of parts.
4. Install remaining case bolts so heads are locked by machined relief in case half. Be sure case halves are assembled to gear so there is adequate nut clearance. Check clearance in carrier before completing assembly.
5. When a new gear or differential case is installed, the case holes must be line-reamed with the gear in order to assemble the parts, using the correct size rivets or bolts. Align case halves and hold together with 4 bolts. Line ream the holes and clean parts before assembly.

Install Differential Bearing Cups

1. Temporarily install bearing cups, threaded adjusting rings (when used) and bearing caps. Tighten capscrews securely.
2. Bearing cups must be a hand push fit in bores, otherwise bores must be re-worked with a scraper or emery cloth until a hand push fit is obtained. Use a blued bearing cup as a gauge and check fit as work progresses.

Bearings With Two Threaded Adjusting Nuts

1. Apply rear axle lubricant to bearing cups and cones. Position cups over cones and install in carrier.
2. Insert differential bearing adjusting nuts and turn hand tight against bearing cups.
3. Install bearing caps. Install and tighten stud nuts or capscrews.
4. Alternately loosen one adjusting nut and tighten the other while turning the differential to assure normal bearing contact and to keep bearing cups straight in the bores.
5. With a dial gauge, establish zero end play. Then tighten adjusting nuts 1¾ to 2½ notches (total for both nuts) tight to correctly preload bearings.
6. Install adjusting nut locks and capscrews.

Type With Two Split Rings

1. With differential and bearings installed, insert thin split rings, making certain that there is clearance between bearing cup faces and rings (do not install bearing caps).
2. With a dial indicator, measure end play of differential by shifting assembly back and forth between rings with a pair of small pinch bars placed between carrier legs and spur gears.
3. Remove and measure thickness of rings. To the total thickness of the 2 thin rings add the end play figure plus another .017″ to .022″ to obtain the total thickness of the 2 thicker rings required to obtain proper bearing preload. Split rings are available in increments of .005″.
4. Insert one split ring in carrier leg groove. Move differential over so that face of bearing cup is held tightly against inserted ring. Rings should be positioned in carrier leg grooves so that split portion will locate in center of cap.
5. Install opposite split ring by tapping it into the carrier leg, Fig. 29, tapping on I.D. of ring opposite split portion.
6. Install differential bearing caps and install capscrews.

Timken Worm Drive Axle

This type axle, Fig. 1, incorporates a forged, ground and polished worm of alloy steel and a worm wheel compounded of special phosphor-bronze. Worm drive units are usually incorporated in tandem drive vehicles where high engine horsepower is required to move heavy loads and where chassis design may be a factor limiting drive unit size.

Remove Drive Unit from Housing

1. Disconnect U-joints at ends of worm shafts. Remove plug at bottom of housing and drain lubricant.
2. Remove axle shafts.
3. Remove attaching stud nuts and break drive unit loose from axle housing with soft mallet and remove tapered dowels. Dowels must be removed before drive unit can be lifted from housing. Back out housing studs if necessary.

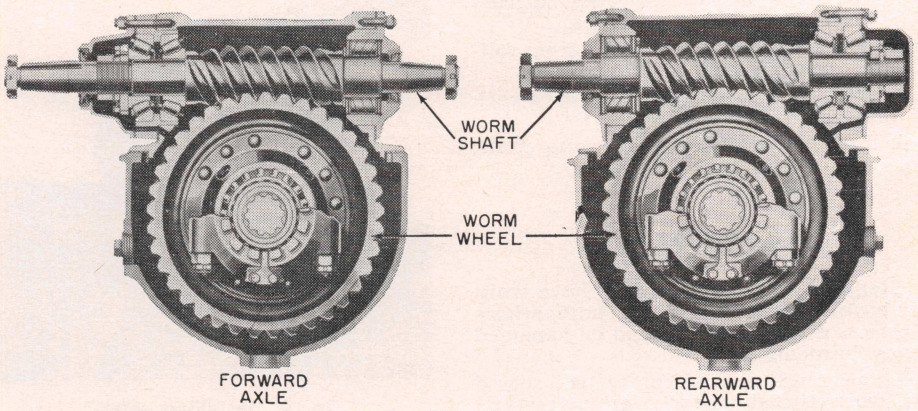

Fig. 1 Timken worm drive tandem axle units. Some units have the tapered bearing cage at the rear of both drive units. The tapered bearings shown are maintained by adjusting nuts. Units of more recent design have selective spacers to establish and maintain tapered bearing adjustment

DISASSEMBLE DRIVE UNIT

1. Remove flange nuts and stud nuts or capscrews from tapered cage cover. Hold forward yoke or flange of rear drive unit while loosening tapered bearing jam nut.
2. Pull yokes or flanges from worm shaft with suitable puller. Remove key (if used) from worm shaft.
3. Match mark one differential bearing cap and carrier leg to identify at reassembly.
4. Remove all locking wire and worm wheel baffle (if used). Remove differential bearing caps, bearing cups, adjusting nuts and differential assembly.

Disassemble Differential Unit

Two types of differential assemblies are used. One uses bolts and nuts to hold differential case halves to worm wheel; the other uses rivets.

1. To disassemble the bolt-on type, match mark differential case halves and worm wheel so parts can be correctly identified if they are to be re-used. Drive bolts from assembly with brass drift and pull assembly apart.
2. To disassemble the riveted-on type, match mark differential case halves and worm wheel for identification on reassembly if parts are to be re-used. Drill out rivets.

Tap differential case half free and remove side gear and thrust washer. Turn worm wheel over and repeat operation.

3. Match mark two halves of differential driving ring at matching lugs for reassembly. Some driving rings have a dowel and hole in respective halves to assure correct assembly.
4. Drive or press driving ring, spider, pinion and thrust washer assembly from worm wheel. Then separate halves of driving ring to disassemble spider and pinions.

Remove Worm Shaft

1. Remove worm shaft and tapered bearing cage from drive unit by tapping on end opposite tapered bearing cage.
2. Remove roller bearing or self-aligning bearing end of drive unit. Remove bearing cage or straight roller bearing cover and seal assembly. Remove roller bearing spacer (if used), roller bearing, and outer race lock screw, Fig. 2.
3. Carefully tap race from drive unit with brass drift. Remove roller bearing from cage and seal as required.
4. Remove worm shaft oil baffle (if used), Fig. 3. Identify location of one end of baffle to aid in reassembly.

Disassemble Worm Shaft & Tapered Bearing Cage

1. Remove attaching nut and related parts and press shaft out of bearing cage. Do not lose selective spacers that are between bearings.
2. Tap hardened steel spacer from roller bearing end of worm shaft.
3. Remove bearing cups from cage with suitable puller.
4. Remove seals or felts from front and rear covers or cages.

REASSEMBLY

Replace worm wheels that have worn or broken teeth and worm shafts where there is evidence of checked or damaged case hardening.

Inspect differential for pitted, scored or worn thrust surfaces of differential case halves, thrust washers, spider trunnions and differential gears. *Thrust washers must be replaced in sets. The use of a combination of old and new thrust washers will result in premature failure.* Check for wear or damage to differential gear teeth. Inspect spider trunnions for looseness in differential case or driving ring bores.

Worm & Tapered Bearing Cage

1. Press inner and outer tapered bearing cups in cage with suitable sleeve.
2. Position outer tapered bearing on suitable sleeve in press. Place cage and cup on outer bearing.
3. Position original selective spacers in cage on outer bearing, Fig. 4.

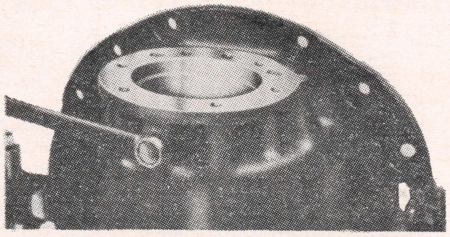

Fig. 2 Removing straight roller bearing outer race lock screw

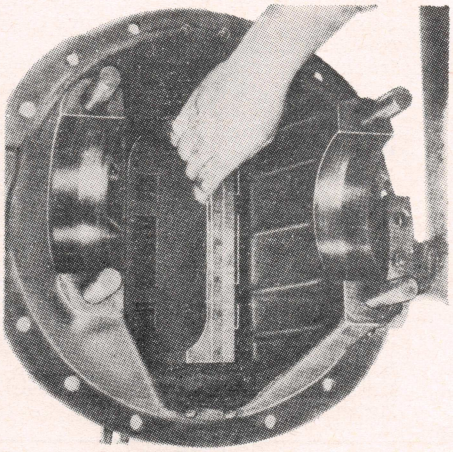

Fig. 3 Removing oil baffle (when used)

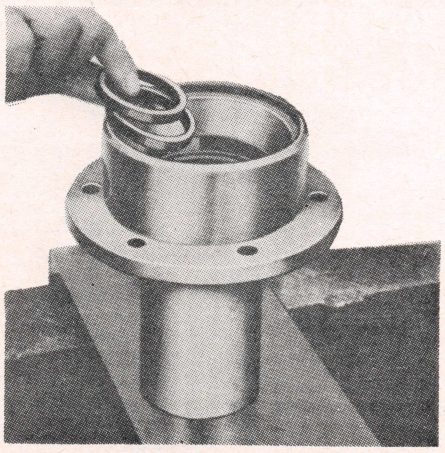

Fig. 4 Installing selective bearing spacers

4. Press worm shaft into cage and bearing as cage is rotated to assure normal bearing contact. *Begin the assembly operation in the press making sure the parts are properly aligned. Press the parts together about ¼" to ⅜", then relieve the press pressure to permit them to realign themselves to prevent distortion or damage.* Continue the pressing operation until the parts are correctly assembled.
5. Install and tighten adjusting nut.

Tapered Bearing Preload

As shown in Fig. 5, wrap strong cord around tapered bearing cage three or four times and attach a pound scale to cord end. Pull scale on horizontal line and read pounds pull. Use rotating pounds pull (not starting pull). Tapered bearing preload may be measured while the assembly is in the press under pressure. The following table gives equivalent nut torques and press pressures:

Worm Shaft Thread Size	Specified Nut Torque Ft. Lbs.	Equivalent Press Pressure In Tons
1" x 20	300-400	6
1¼ x 18	700-900	11
1½" x 12	800-1100	14
1½" x 18	800-1100	14
1¾" x 12	800-1100	14
2" x 16	800-1100	14
2⅛" x 12	800-1100	14

Compute bearing preload torque by multiplying radius of bearing cage pilot by the number of pounds pull. For example, assume diameter of cage pilot is 6", the radius is 3". If the scale reading is one pound rotating pull, the bearing preload is 3 inch pounds. Tapered bearing preload should be zero worm shaft end play to 5 inch pounds maximum torque. If in excess of 5 inch pounds when nut is correctly tightened, remove nut and outer bearing cone and substitute a thicker spacer. If less than zero worm shaft end play, remove spacer and add one thinner than the one removed. Continue this procedure until correct bearing preload is obtained.

Adjust splined worm shaft tapered bearing preload in the same manner, omitting the seal and cover assembly (where used) until correct preload is obtained.

Position nut lock and washer (where used) over adjusting nut and tighten jam nut. Check tapered bearing preload and readjust if necessary. Carefully tap steel washer on opposite end of worm shaft.

Assemble Worm Shaft In Drive Unit

1. Coat oil seals with non-hardening sealing compound and assemble in cover or cage with suitable sleeve.
2. Install roller bearing outer race (where used) in drive unit with suitable sleeve. Be sure lock screw holes are properly aligned. Install and tighten bearing lock screw.
3. Note identifying location marks previously made on worm shaft oil baffle (new baffles have stenciled installation directions).
4. Install baffle so its tangs engage notches in drive unit. Position new gasket over tapered bearing cage studs.
5. Install worm shaft and bearing cage assembly in drive unit, Fig. 6.
6. Thread two or three strands of wire through oil baffle holes and twist wire to contract baffle, Fig. 7.
7. Tap worm shaft assembly into drive unit so baffle will fit against I.D. of tapered bearing cage. *Cut and remove wire, being sure no small bits of wire drop into drive unit.*
8. Install new gasket over tapered bearing cage flange and install cage cover or cover and seal assembly. Tighten stud nuts over lock washers.

9. Install roller bearing in opposite end of drive unit, or install self-aligning bearing and cage with new gasket. Install roller bearing outer washer and dowel assembly (if used).
10. Position new gasket over cover or cage and install assembly. Tighten stud nuts or capscrews.
11. When aluminum cover and seal assemblies are used, large flat steel washers are located beneath stud nut or capscrew lock washers.

Assemble Worm Wheel & Differential

Bolt-On Type

1. Assemble worm wheel to differential case half, carefully noting case matching marks. A suitable drift can be used in aligning case half and worm wheel holes.
2. Turn assembly over and install side gear thrust washer and side gear in case half.
3. Assemble differential pinions and thrust washers on spider. Install spider and pinion assembly in case half.
4. Install opposite side gear and thrust washer. Install opposite case half, carefully noting case matching marks.
5. Install two $\frac{7}{16}$" x 4½" bolts in assembly and tighten nuts. Check assembly for free rotation of gears.
6. *When a new worm wheel or differential case is installed, the case holes must be line-reamed with the worm wheel holes to properly reassemble, using correct size bolts. Use care to prevent ream chips from falling into assembly. Case holes may be covered with masking tape, Fig. 8, or plugged wth stoppers.*
7. Remove two bolts used to hold assembly together.
8. Install differential assembly bolts so heads are locked by case half flange shoulder and safety wire holes in bolts are roughly parallel to worm wheel O.D. Install and tighten nuts.

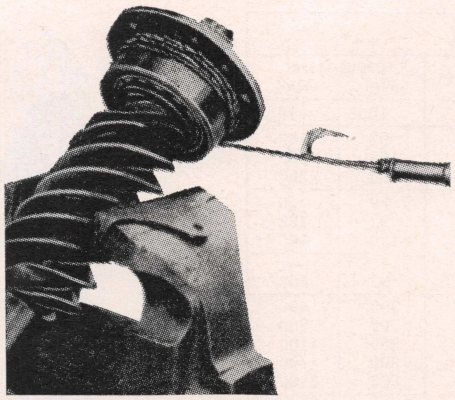

Fig. 5 Measuring worm shaft tapered bearing preload

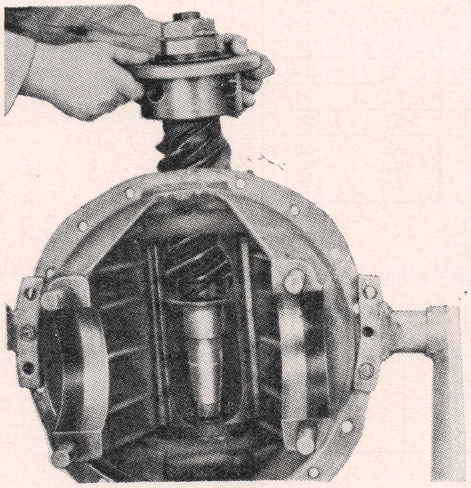

Fig. 6 Installing worm shaft assembly

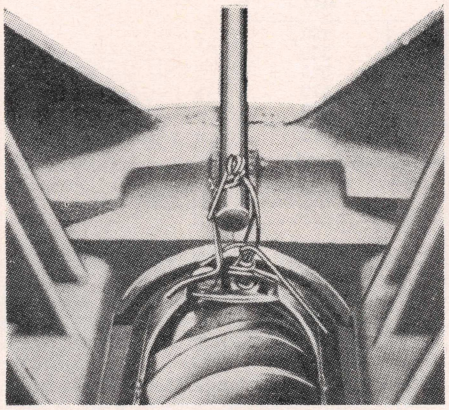

Fig. 7 Wire threaded through oil baffle holes to contract baffle

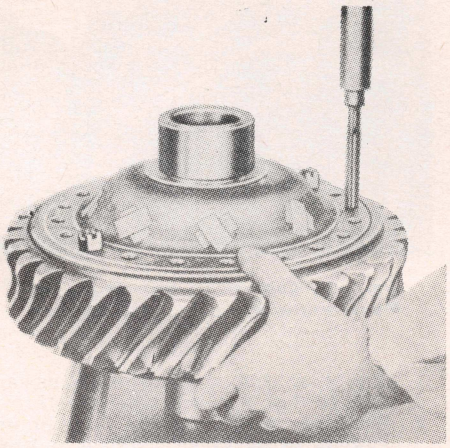

Fig. 8 Differential case holes covered with masking tape to prevent chips from falling into gear assembly when line-reaming case-to-worm wheel holes for bolt or rivet installation

The two case halves are usually identical except for width of bolt circle flange shoulder. Install bolts so that bolt heads will fit snugly against locking shoulder of one case half.

9. Lock bolts in groups of four with soft iron wire. Install differential bearings with suitable sleeve. Lubricate assembly.

Riveted Type

1. Assemble pinion and thrust washers on spider. Assemble spider assembly in half of differential driving ring.
2. Place assembly in worm wheel driving ring slots and assemble other half of driving ring, Fig. 9. Note previously made matching marks (or dowel and its hole) in matching driving ring lugs.
3. Support worm wheel on steel blocks and assemble driving ring and spider assembly to wheel by driving it in wheel slots with a soft hammer. Continue procedure until driving ring assembly is flush with machined face of worm wheel.
4. Install side gear and thrust washer. Assemble differential case half to worm wheel and driving ring assembly, noting differential case matching marks. A suitable drift can be used to aid in aligning case half-to-worm wheel holes.
5. Turn assembly over and install opposite side gear and thrust washer and case half. Note matching marks on case half.
6. Hold assembly together with two $\frac{7}{16}$" x 4½" bolts. Check for free rotation of gears.
7. *When a new worm wheel or differential case is installed, the case holes must be line-reamed with worm wheel holes to properly reassemble, using the correct size rivets. Use care to prevent rivet chips from falling into assembly. Case holes may be covered with masking tape, Fig. 8.*
8. Install rivets cold. When correct, rivet head being formed will be at least ⅛" larger in diameter than rivet hole. The formed head should not be more than $\frac{1}{16}$" lower than preformed head as excessive pressure may distort assembly and result in unsatisfactory tooth contact.
9. Install differential bearings with suitable sleeve. Lubricate assembly.

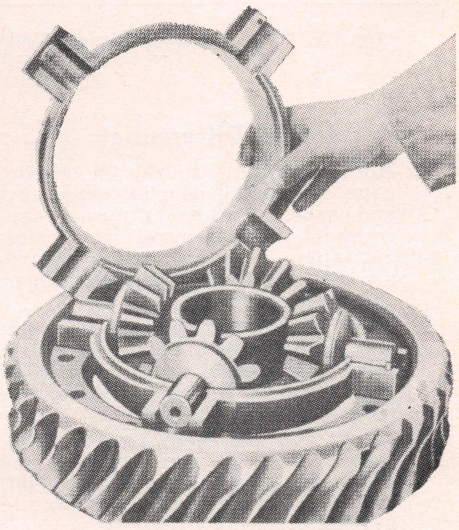

Fig. 9 Differential components used with riveted case

BOLTS AND STUD NUTS				
LOCATION	DIA.	NO. THDS.	TORQUE—LB. FT. MIN.	MAX.
Oil Baffle	5/16″	24	16	18
Carrier to Housing	½″	20	92	102
	⅝″	18	185	205
	¾″	16	320	360
Worm Shaft Covers and Cages	7/16″	20	59	66
	½″	20	92	102
	9/16″	18	130	145
Differential Assembly and Worm Wheel Bolt	½″	20	92	102
Worm Shaft Yoke or Flange Nut	1″	20	300	400
	1¼″	18	700	900
	1½″	12	800	1100
	1½″	18	800	1100
	1¾″	12	800	1100
Worm Shaft Bearing Locknut	1½″	12	800	1100
	2″	16	800	1100
	2⅛″	12	800	1100
CAP SCREWS				
Adjusting Nut Lock	5/16″	18	15	17
	5/16″	24	16	18
Oil Baffle	⅜″	16	26	29
Carrier to Housing	½″	13	82	91
Roller Bearing Race Lock	½″	13	82	91
Worm Shaft Covers and Cages	7/16″	14	52	58
	½″	13	82	91
	9/16″	12	116	129

DIFFERENTIAL BEARING CAP CAP SCREWS OR STUD NUTS (Earlier Axle Models Without Hardened Washers)

CAP SCREW OR STUD NUT DIAMETER	CAP SCREW OR COARSE STUD THREAD	STUD NUT OR FINE THREAD	TORQUE—LB. FT. MIN.	MAX.
⅝″	11	18	126	140
¾″	10	16	225	250
⅞″	9	14	330	370
⅞″	14	14	375	415
1″	14	14	375	415

DIFFERENTIAL BEARING CAP CAP SCREWS OR STUD NUTS (Later Axle Models Employing Hardened Washers)

CAP SCREW OR STUD NUT DIAMETER	CAP SCREW OR COARSE STUD THREAD	STUD NUT OR FINE THREAD	TORQUE—LB. FT. MIN.	MAX.
⅝″	11	18	160	180
¾″	10	16	290	320
⅞″	9	14	470	520
⅞″	14	14	510	570
1″	14	14	570	630

Fig. 13 Torque specifications for Timken worm drive axles

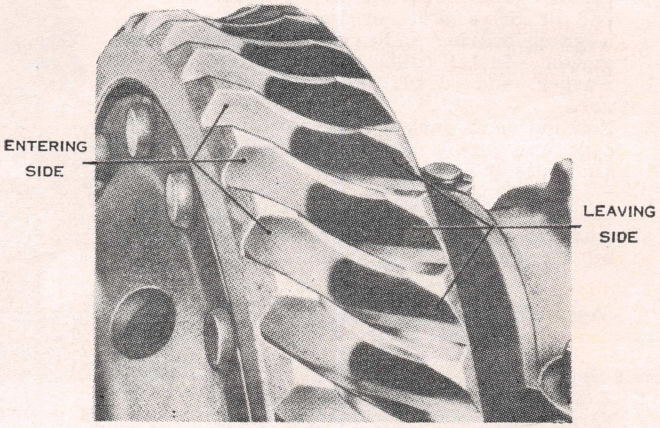

Fig. 10 Satisfactory tooth contact. Starting at leaving side 30 to 60% full tooth length

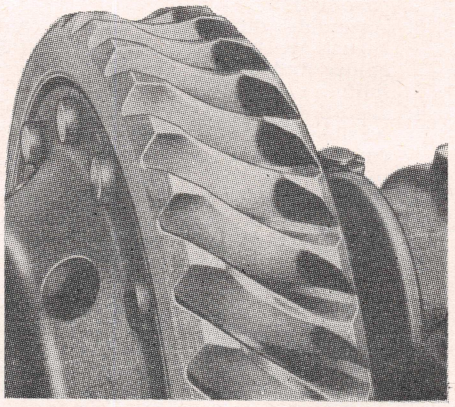

Fig. 11 Not enough leaving side contact. Move worm wheel to leaving side

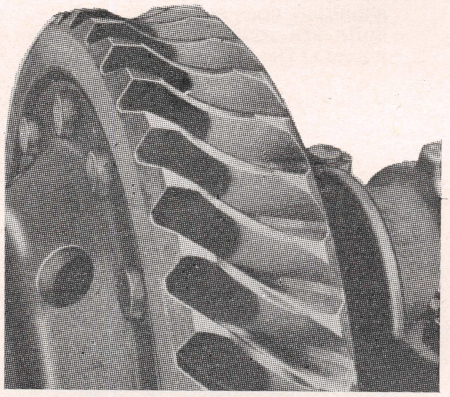

Fig. 12 Contact at entering side. Move worm wheel to entering side

Install Differential

1. Note identifying marks on bearing caps and install bearing cups, nuts and caps. Tighten nuts or capscrews. Then remove caps, cups and nuts. Lubricate parts and reassemble again, tightening nuts or capscrews securely.
2. Alternately loosen one adjusting nut and tighten the opposite nut while turning assembly to straighten bearing cups in bores and assure normal bearing contact.
3. Mount dial indicator to contact machined face of worm wheel and check end play. Establish a .000″ end play (no preload condition in bearings).
4. Tighten adjusting nuts 1¾ to 2½ notches tight (total for both nuts) to correctly preload bearings.

Worm Tooth Patterns

The worm wheel teeth have an entering side (where the worm shaft teeth enter) and a leaving side (where the worm shaft teeth leave). The entering sides of the teeth have the flattest angle while the leaving sides are almost straight or vertical.

The proper tooth contact during operation under load is approximately 80% of the tooth length, starting at the leaving side of the tooth, progressing toward the entering side of the tooth. *Do not have worm tooth patterns to have contact at the entering side.*

The correct tooth contact, when turned by hand before operation under load, should be 30 to 60% of worm wheel tooth length, starting at the leaving side of the tooth. To establish correct tooth contact, proceed as follows:

1. Apply a thin coating of Prussian blue to 6 or 8 worm wheel teeth.
2. Set the worm to its maximum amount of backlash, using a dial indicator.
3. Rotate worm shaft to wipe blue from worm wheel, indicating tooth contact.
4. Move worm wheel to one side or the other until contact, starting at the

leaving side is 30 to 60% of full tooth length, Fig. 10.

5. Always use drive side of teeth when making adjustments as coast side will automatically show a satisfactory pattern when drive side contact is correct. If tooth pattern shows as illustrated in Figs. 11 and 12, adjust as indicated. As a rule it is necessary to move the worm wheel only a few thousandths of an inch to alter tooth contact.
6. To adjust, move differential bearing adjusting nuts about ¼ turn at a time until proper tooth contact is obtained. Maintain differential bearing preload during adjustment by first loosening the adjusting nut on the side toward which the differential is to be moved and tightening the opposite adjusting nut the same amount. *Make normal wear adjustments at the left hand bearing only. This will maintain correct worm and wheel alignment.*

Final Assembly

1. Tighten differential bearing cap nuts or capscrews. Install nut locks and lock screws and secure with lock wire.
2. Install and tighten yoke and flange nuts.
3. With new gasket, install drive unit in housing. First install lock washer and stud nuts under any drive unit and housing offset. It is impossible to start these nuts after drive unit is tight in housing.
4. Install tapered dowels (where used). Alternately tighten nuts.
5. Connect U-joints at worm shaft. Install axle shafts and connect brake lines.

Split Housing Axle

The Timken split Housing Type, Fig. 1, is a single reduction, hypoid geared axle. The differential and gear assembly is mounted on tapered roller bearings with the cups assembled in the case and cover halves of the unit. The straddle-mounted pinion has two tapered roller bearings and a radial thrust bearing. The tapered roller bearings are located forward of the pinion teeth and the radial bearing at the inner end of the pinion.

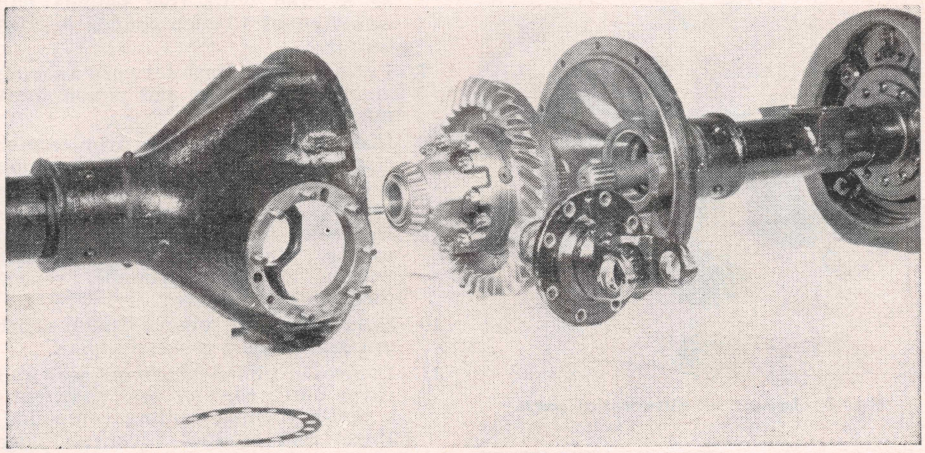

Fig. 1 Timken Unit Housing Type Axle

Removing Axle

1. Remove plug from bottom of axle housing and drain lubricant.
2. Disconnect universal at pinion shaft.
3. Disconnect brakes.
4. Remove spring clips.
5. Remove axle from under vehicle.
6. Remove axle shaft stud nuts and washers.
7. Rap axle shafts sharply in center of flange with a heavy steel hammer to free dowels. Remove taper dowels and axle shafts, and carefully remove outer oil seal assemblies.
8. Remove wheels.
9. Place axle assembly in vise, holding by the tube on the case half.

Disassemble Axle

1. Before proceeding, place length of pipe or suitable support slightly smaller than the axle shaft splines approximately two-thirds through the axle from the case side to prevent dropping the differential assembly.
2. Remove bolts, nuts and washers from case and cover and remove cover half.
3. Remove differential and gear assembly.
4. Remove support pipe.

Disassemble Differential & Gear

1. If original identification marks are not clear, mark differential case halves with a punch before disassembling for correct alignment when reassembling.
2. Cut lock wire, remove bolts and separate case halves.
3. Remove spider, pinions, side gears and thrust washers.
4. Remove rivets and separate gear and case if required. In removing rivets, carefully center punch rivets in center of head. Use drill $\frac{1}{32}''$ smaller than rivet body to drill through head. Press out rivets.
5. Use bearing puller to remove bearings if necessary.

Remove Pinion & Cage

1. Secure yoke with holding tool and remove pinion shaft nut and washer.
2. Insert puller through yoke and remove.
3. Remove pinion bearing cover and oil seal assembly.
4. Remove pinion and cage assembly, using puller screws in holes provided. Driving pinion from inner end with a drift will damage the bearing lock ring groove.

Disassemble Pinion & Cage

1. Tap shaft from cage with soft mallet or press shaft from cage.
2. Remove outer bearing from cage.
3. Remove spacer or spacer combination from pinion shaft.
4. Remove rear thrust bearing and radial bearing with bearing puller if necessary to replace.
5. Remove oil seal from bearing cover.
6. If necessary to remove differential bearing cups, wire the selective spacers which are behind the cups to their respective axle halves.

Differential Pinion Bushings

If necessary to replace these bushings, proceed as follows:

1. Split the worn bushing with a hacksaw and drive it out.
2. Remove burrs or sharp corners from inner edge of pinion bore to prevent shearing or buckling of bushing on installation.
3. Place pinion on anvil. Position bushing in inner end of pinion bore and press squarely into position. Use adapter with correct size offset to fit bushing.
4. Use bar to press burnishing ball through bushing. If desirable, the bar may be shortened to permit the use of a bench vise to install and burnish bushing.

Reassemble Pinion & Cage

When a new pinion is required, the bearing and cage assembly furnished for service purposes should be used. This

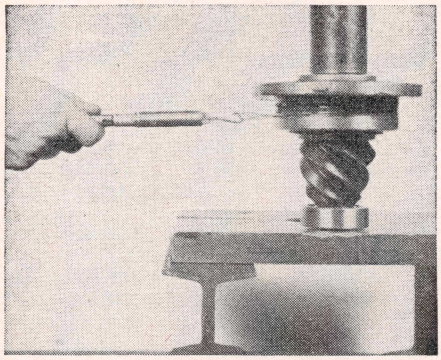

Fig. 2 Checking pinion shaft bearing preload

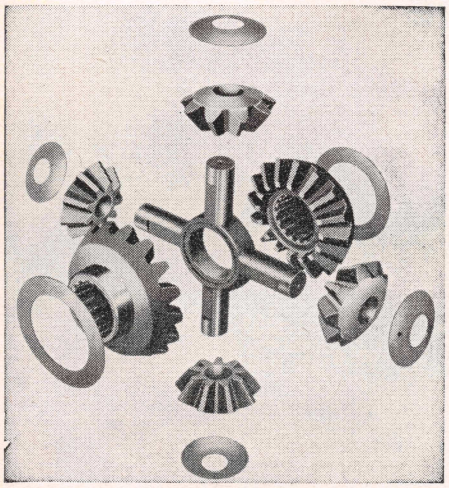

Fig. 3 Layout of differential parts

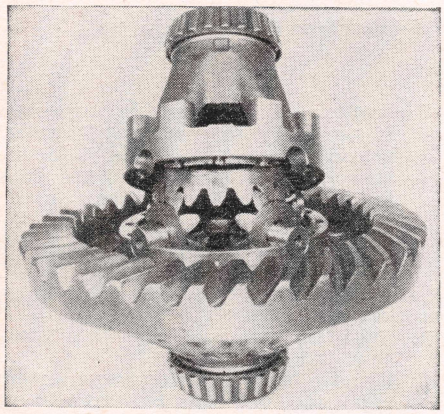

Fig. 4 Align mating marks before assembling differential case halves

includes the cage with bearing cups assembled, bearing cones and selective spacer required to obtain the correct bearing preload. The used bearing cones should be removed from the pinion shaft and the new bearings and spacer used in the assembly.

1. Press rear thrust and radial bearings firmly and squarely against the pinion shoulders with a suitable sleeve.
2. Install radial bearing lock ring and squeeze ring into pinion shaft groove with pliers.
3. If new cups are to be installed, press firmly against pinion bearing cage shoulders.
4. Lubricate bearings and cups with light machine oil.
5. Insert pinion and bearing assembly in pinion cage and position spacer or spacer combination over pinion shaft.
6. While in a press under 25,000 pounds pressure, check bearing preload torque. Wrap soft wire around cage, Fig. 2, and pull on a horizontal line with a pound scale. If a press is not available, the yoke may be installed and the pinion nut tightened to 300-400 foot pounds torque for checking. If rotating torque is not within 12-18 inch-pounds, use thinner spacer to increase or thicker spacer to decrease preload. As an example, assuming the pinion cage diameter to be 6″, the radius would be 3″ and with five pounds pull would equal 15 inch-pounds preload torque.
7. Press yoke against forward bearing and install washer and pinion shaft nut.
8. Place pinion and cage over carrier studs. Hold yoke and tighten pinion shaft nut to 300-400 foot-pounds torque.
9. Recheck pinion bearing preload torque. If rotating torque is not within 12-18 inch-pounds, repeat foregoing procedure.
10. Hold yoke and remove pinion shaft nut and yoke.
11. Lubricate pinion shaft oil seal and cover outer edge of seal body with a non-hardening sealing compound. Press seal against cover shoulder with seal driver.
12. Install new gasket and bearing cover.
13. Press yoke against forward bearing and install washer and pinion shaft nut.
14. Tighten pinion shaft nut to 300-400 foot-pounds torque and install cotter key. Do not back off nut to align cotter key holes.

Assemble Differential & Gear

1. Rivet bevel gear to case half with new rivets. If a new gear or differential case is to be used, the rivet holes in the gear and case should be checked for alignment and line-reamed if necessary. The gear must be tight on the case pilot and riveted flush with the differential case flange. Check with a .002″ feeler gauge. Rivets should not be heated but should be upset cold. When the correct rivet and rivet set is used, the head being formed will be at least ⅛″ larger in diameter than the rivet hole. The head will then be approximately the same height as the preformed head. The formed head should not exceed $\frac{1}{16}$″ less than the preformed head as excessive pressure will cause distortion of the case holes and result in gear eccentricity.
2. Lubricate differential case inner

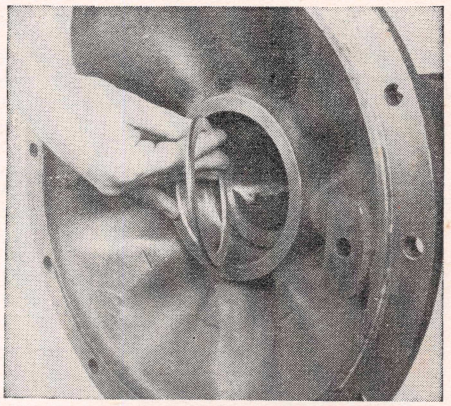

Fig. 5 Installing differential bearing spacer

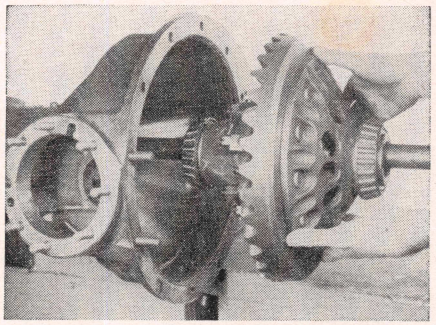

Fig. 6 Installing differential and gear into case

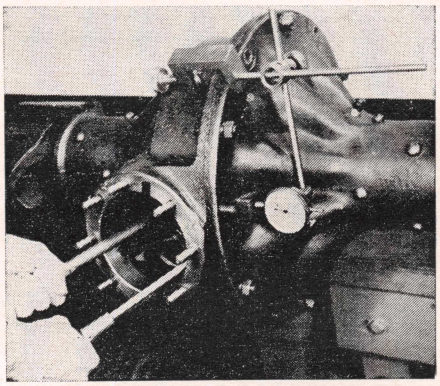

Fig. 7 Checking differential and gear end play with dial indicator through thrust block pin hole

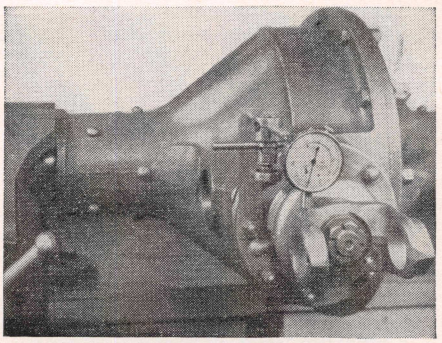

Fig. 8 Checking gear lash with dial indicator

walls and all component parts, Fig. 3, with axle lubricant.
3. Position thrust washer and side gear in bevel gear and case half.
4. Place spider with pinions and thrust washers in position.
5. Install component side gear and thrust washer.
6. Align mating marks, Fig. 4, position component case half and draw assembly together with four bolts equally spaced.
7. Check assembly for free rotation of differential gears and correct if necessary.
8. Install remaining bolts, tighten to 80-110 foot-pounds torque and thread with lock wire.
9. If bearings are to be replaced, press them firmly and squarely on differential case halves.

Adjust Differential Bearing Preload

1. Remove thrust block, using drift to drive pin out of cover.
2. Install differential bearing spacers, Fig. 5, in the original position if new bearing cups are installed. Spacers must be installed with the chamfered edge toward the machined surfaces in the housing.
3. Insert pipe used for disassembling case half.
4. Position differential and gear over pipe, Fig. 6, with gear facing the case half and slide into position.
5. Install new gasket over case flange.
6. Position cover half over pipe and draw axle halves together with six bolts equally spaced.
7. Check differential and gear assembly end play with dial indicator through thrust block pin hole against gear, Fig. 7. Both differential bearing preload and gear lash are controlled by selective spacers, available in thickness steps of .003", which are installed between the differential bearing cups and the case and cover halves of the axle housing. Bearing preload may be increased or decreased by using a thicker or thinner spacer respectively in the cover half of the assembly. The gear may be moved toward the pinion, decreasing the gear lash, by decreasing the thicknes of the spacer in the case half and increasing the thickness of the spacer by the same amount in the cover half. Reversing this transposition will move the gear away from the pinion and increase the gear lash. The correct preload of .008" to .013" tight is obtained as follows:
8. Increase or decrease the thickness of the spacer used in the cover half to obtain a freely rotating gear with from .000" to .005" end play.
9. Remove spacer in cover half and install a spacer .008" plus the end play thicker than the spacer used to obtain .008" to .013" preload.
10. If a new gear or case has been installed, check runout at back face of gear. Correct and recheck if runout exceeds .005".
11. When adjustment is satisfactory, remove cover and move differential and gear out on support sufficient to permit installation of pinion and cage assembly.
12. Install thrust block and pin.

Install Pinion & Cage

1. Coat cage flange contact surface with non-hardening sealing compound and position cage assembly over studs and tap into position with a soft mallet.
2. Install lock washers and stud nuts and tighten to 70-90 foot-pounds torque.

Check & Adjust Gear Lash

1. Install differential and gear assembly and assemble cover with six bolts equally spaced and tighten to 85-95 foot-pounds torque.
2. Check gear lash with dial indicator from a position 2" from pinion shaft center, Fig. 8. The amount indicated at this point will be twice the amount of the actual gear lash.
3. Transpose spacers used in both case and cover, decreasing the thickness of the spacer on the side in the direction which the gear is to be moved and increasing the thickness of the opposite spacer exactly the amount as required to obtain the correct gear lash of .006-.012" (.012-.024" on indicator).
4. Install remaining bolts, washers and nuts in housing and tighten all nuts in bolt circle to 85-95 foot-pounds torque.

Install Axle in Vehicle

1. Position axle under vehicle and install spring clips.
2. Clean and lubricate hub cavity and wheel bearings if required.
3. Install wheels and adjust wheel bearings.
4. Install new outer oil seal if required.
5. Install axle shafts, using new gaskets. Tighten stud nuts to 85-95 foot-pounds torque.
6. Connect brakes and universal joint.

Electric Shift Unit For Two-Speed Axles

DESCRIPTION

Basically, the shift unit, Fig. 1, consists of an electric motor, a worm shaft and wheel, an eccentric and a connecting rod. The electric motor drives the worm shaft and wheel; the eccentric is attached to the worm wheel and drives the connecting rod which operates the shift shaft.

The actual shifting is done by a double acting compressing spring contained in the push rod. This spring is mounted on the shift shaft which is attached to the connecting rod. As the connecting rod pushes (or pulls) the shift shaft, the spring cocks and, in turn, pushes or pulls on the push rod and shift collar. When the driving torque is relieved (by releasing the accelerator or clutch) the spring pressure will complete the shift.

SIDE MOUNTED TYPE

Removal

1. Disconnect electric harness at terminals at shift unit cover.
2. Remove attaching screws and filler plug from cover.
3. Screw a threaded tool into the filler plug hole and pull the cover from the housing. The tool is made from a 1/8 x 27 pipe plug welded to the end of a T handle. *Do not pry cover from housing.*
4. Drive roll pin from shift shaft, using tool having a 5/8" body and a $\frac{5}{32}$" nose section. *If the roll pin is in line with the worm shaft, it will be necessary to change the position of the shift shaft before the pin can be driven out.*
5. To change the position of the shift shaft, turn on the vehicle ignition switch. Shift the unit to the desired position by touching the hot lead of the wiring harness to the left-hand terminal on the shift unit cover. It is not necessary to attach the cover to the housing. *If the shift motor is not operating, disconnect the wires at the inner face of the cover and remove the motor as outlined under Disassembly. Then install a new motor and shift the unit to the desired position. In case a new motor is not available, use a slotted tool that fits over the tang of the worm shaft and turn it until the shift shaft changes position.*
6. Unfasten and remove shift unit. Do not damage oil seal located in flange section.

Disassembly

1. Disconnect wires from terminals on inside face of cover.
2. Remove two stud nuts and star washers that hold motor to housing.
3. Carefully break loose motor and remove it and gasket from housing.
4. Loosen jam nut and remove adjusting screw. *Do not lose ball bearing that rides in recess of adjusting screw.*
5. Remove worm shaft assembly and disassemble it if necessary. *The spring retainer at bottom of worm shaft is pressed on and cannot be removed by hand. However, it can be removed by holding it in a vise and driving the shaft out.*

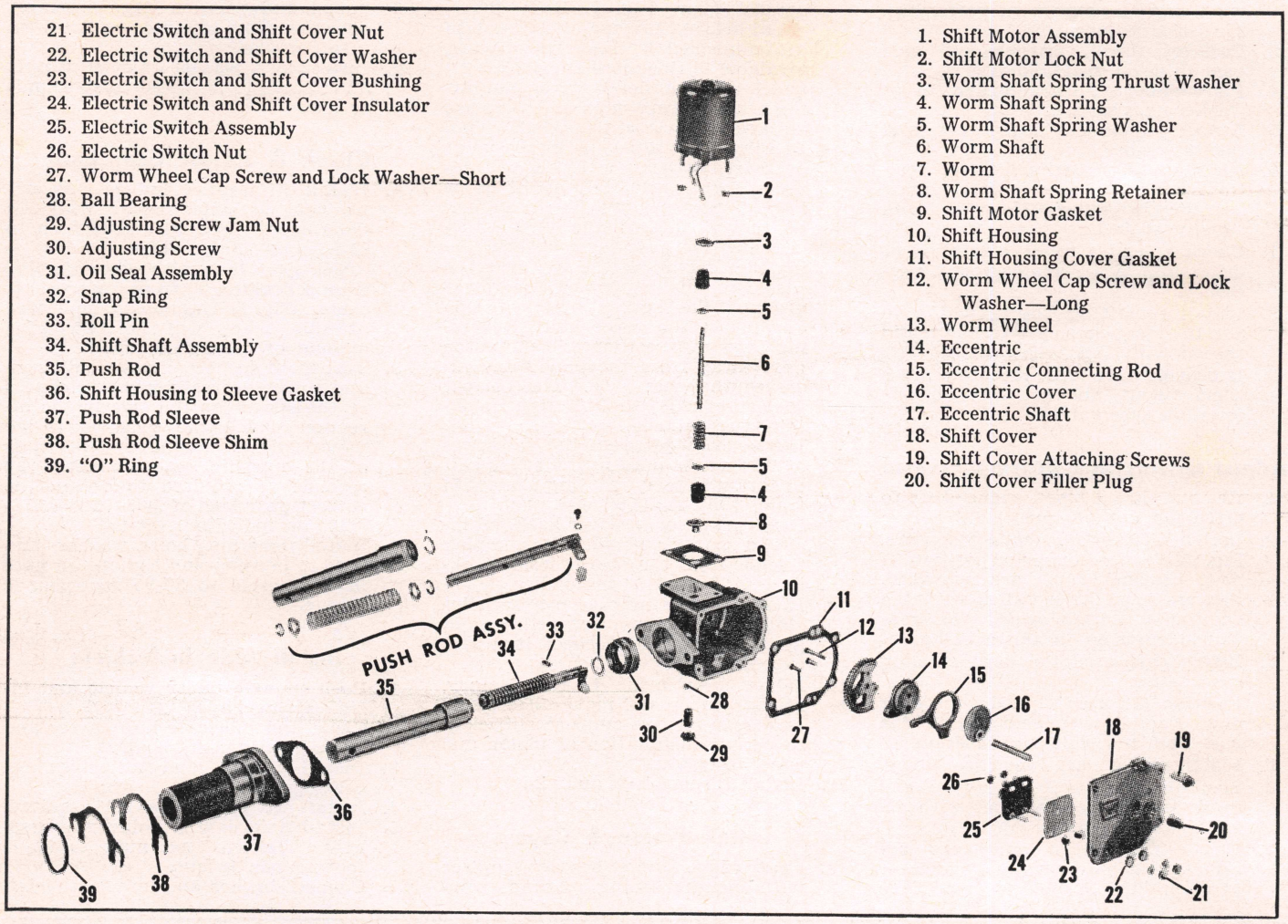

Fig. 1 Electric shift for two speed axles

6. Remove worm wheel and eccentric assembly. To disassemble, hold assembly in vise and remove three capscrews and lockwashers. Drive eccentric shaft out of assembly.

Reassembly

1. Reassemble worm shaft and position it in shift housing.
2. Install shift motor with gasket to housing. Slot in motor shaft fits over tang of worm shaft.
3. Install and tighten two locking stud nuts that secure motor.
4. Place ball bearing in recess of adjusting screw.
5. Turn adjusting screw in until the ball bearing is snug against bottom of worm shaft. Then back off screw 1/8 turn for proper adjustment. Hold adjusting screw in place and tighten lock nut. Check to see that worm shaft turns freely by hand.
6. Reassemble worm wheel and eccentric. *The eccentric shaft should protrude an equal distance at top and bottom of the assembly.* Install assembly in position shown in Fig. 2.
7. Connect electric leads on inside face of shift cover. Attach red wire to terminal closest to flange of shift unit.

Installation

1. Position shift fork in cross shaft shift collar groove.
2. Slide push rod into shift fork. Line up set screw hole in fork with recess in push rod.
3. Install shift fork set screw and tighten jam nut to 30 - 33 lb. ft. torque. Be sure set screw enters recess in push rod.
4. Lock set screw to fork with wire.
5. Remove screws from shift unit cover.
6. Remove cover from housing, using a tool made from a 1/8 x 27 pipe plug welded to the end of a T handle and screwed into filler plug hole. Do not pry cover.
7. Move shift unit to neutral position as shown in Fig. 3.
8. Move cross shaft shift collar to neutral (central) position.
9. Install new shift housing to sleeve gasket.
10. Position shift unit over mounting studs. Do not damage oil seal installed in flange section of shift housing.
11. Move connecting rod into slot in end of shift shaft.
12. Install lockwashers and mounting stud nuts. Tighten nuts to 26 - 29 lb. ft. torque.
13. Line up hole in connecting rod with hole in end of shift shaft.
14. When holes are lined up, drive roll pin into place with a suitable driver.
15. Install gasket and cover. *To install cover, shift unit and axle assembly must be in neutral position to avoid damaging the switches.*
16. Fill unit to bottom of filler hole with SAE 10 motor oil. Install filler plug.

Connect Electric System

If a vacuum or air shift unit is being replaced by the electric type, it will be necessary to install an electric hook-up from the cab of the vehicle to the electric shift unit.

If the spur pinions on the cross shaft are located in the conventional manner, with the HI speed (larger) pinion next to the drive gear, Fig. 4, connect the red wire to the terminal indicated in Fig. 5, with the black wire connected to the other terminal.

If the spur pinions are located in the wide range manner, with the LO (smaller) pinion next to the drive gear, Fig. 6, connect the red wire to the terminal indicated in Fig. 5, with the black wire connected to the other terminal.

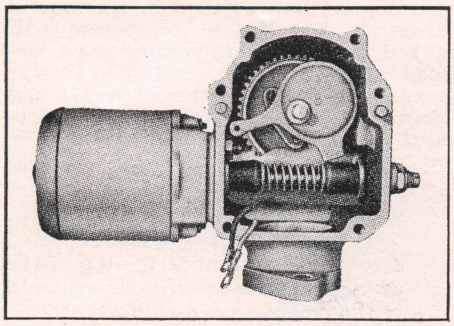

Fig. 2 Worm wheel and eccentric installed

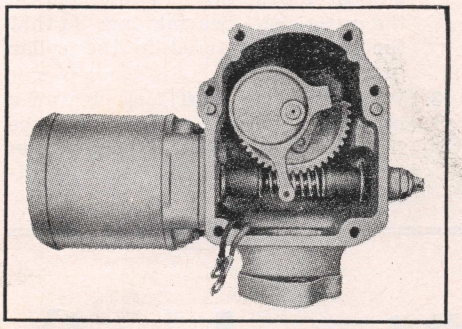

Fig. 3 Shift unit in neutral position

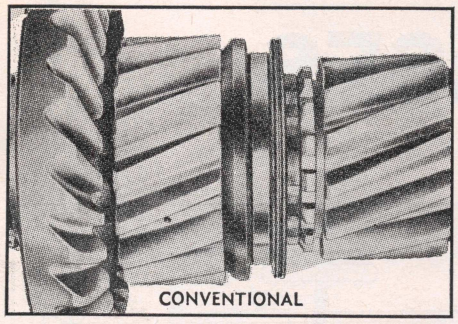

Fig. 4 Location of gears on cross shaft with conventional ratio

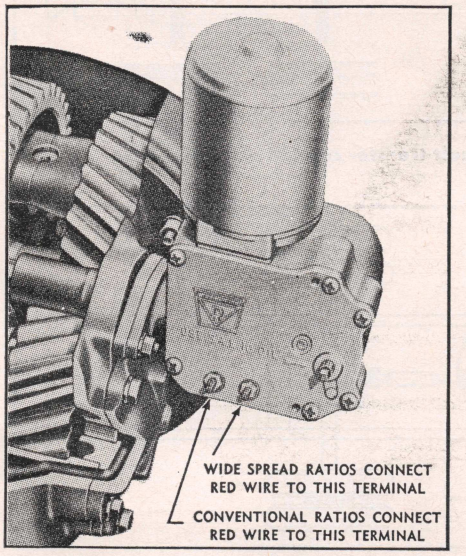

Fig. 5 Electric shift wiring hook-up

Check Operation of Shift Unit

1. Turn on ignition switch.
2. Flip switch button in cab to operate shift unit. One man can operate switch while another observes movement of shift collar on cross shaft through pinion cage bore.
3. Check to make sure shift collar completes shift into both HI range and LO range. The engaging teeth on shift collar must completely engage corresponding teeth of spur pinions. Incomplete shifts can cause serious axle failures.

Adjustments

1. Shift collar travel can be equalized by altering the shim pack installed behind flange of push rod sleeve.
2. Check clearance of shift fork pads in shift collar with feeler gauge, Fig. 7. Clearance should not be less than .010″ on each side of fork in both HI and LO speed positions. *When checking shift fork clearance, shift collar must be flush with end face of engaged spur pinion.*
3. Add or remove shims from pack under sleeve to obtain correct adjustment.

Final Assembly

1. If above adjustments are satisfactory, install shims, pinion and cage assembly, and capscrews.
2. Connect universal joint at pinion shaft.
3. Load vehicle and test operation of shift unit under actual operating conditions.

FRONT MOUNTED TYPE

Removal

1. Disconnect wires from terminals on shift cover.
2. Unfasten and remove shift unit from carrier. *The push rod must be drawn in toward shift housing before it can be removed from carrier, otherwise it will not clear bore in carrier.*
3. To move push rod to correct position, first turn on ignition switch. Then shift the unit by touching the hot lead of the wiring harness to the right-hand terminal. If shift motor is not working, see procedure under *Change Position of Shift Shaft* in the Side Mounted Type procedure. Do not attempt to force or pry shift unit from carrier.

Disassembly

1. Remove cover attaching screws and filler plug.
2. Screw a threaded tool into filler plug hole and pull off cover. Tool can be made from a 1/8 x 27 pipe plug welded to the end of a T handle. Do not pry off cover.
3. Drive roll pin from shift shaft. *If roll pin is in line with worm shaft, it will be necessary to change position of shift shaft by turning the worm.*

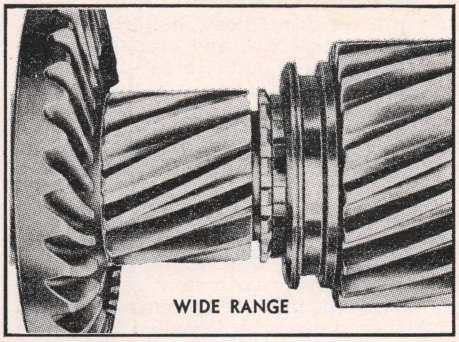

Fig. 6 Location of gears on cross shaft with wide range ratio

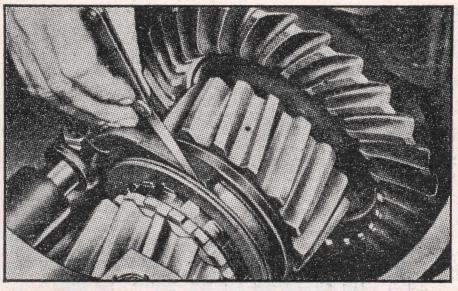

Fig. 7 Checking clearance of shift fork pads in shift collar with feeler gauge

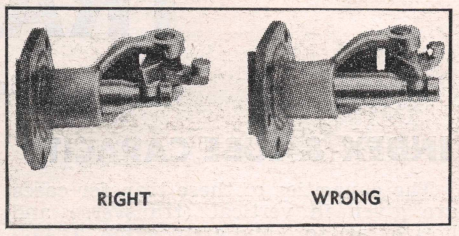

Fig. 8 Positioning push rod to permit entry in carrier bore

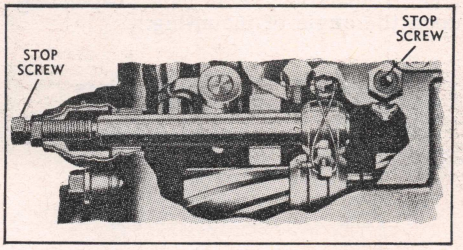

Fig. 9 Shift collar travel adjustment. Front mounted type

4. Remove two stud nuts and separate shift unit from push rod and bracket assembly.
5. Proceed with disassembly as outlined for the Side Mounted Type.

Reassembly

1. Install worm shaft assembly, shift motor, adjusting screw, and worm wheel and eccentric assembly as outlined for the Side Mounted Type.

2. Place worm shaft and worm wheel in the neutral position (see Fig. 3).
3. Install push rod and bracket assembly. Tighten nuts to 26 - 29 lbs. ft. torque.
4. Slide connecting rod into slot at end of shift shaft.
5. Line up hole in connecting rod with hole in shift shaft and install roll pin with suitable driver.
6. Connect wire leads at inside face of shift cover. Attach red wire closest to flange of shift unit.
7. Install cover with new gasket. The shift unit must be in neutral position when cover is installed to avoid damage to switches.

Installation

1. Move cross shaft shift collar to engage spur pinion opposite drive gear.
2. Shift the unit to the corresponding position (with push rod drawn in toward shift unit housing, Fig. 8). Push rod must be in "right" position, otherwise it will not fit in carrier bore. *To shift the unit, use a battery and two leads; ground one lead and touch the other to the right-hand terminal on the cover.*
3. Install new gasket and slide shift unit into carrier bore.
4. Remove inspection cover from top of carrier and look inside to guide push rod bellcrank into slot in shift shaft.
5. Install and tighten attaching capscrews to 26 - 29 lb. ft. torque.
6. Fill unit with SAE 10 motor oil to filler plug hole. Install filler plug.

Connect Electric System & Check Operation

Connect wires as outlined for the Side Mounted Type. Check the operation of the shift unit as outlined for the Side Mounted Type, observing the movement of the shift collar through the inspection hole at top of carrier.

Adjustments

Shift collar travel can be adjusted by the stop screws installed in the carrier assembly, Fig. 9. One stop screw is installed in cross shaft bearing cage, opposite the drive gear, and the other is installed in the top of the carrier. *Do not disturb settings of stop screws unless shift fork adjustments are required.*

1. If necessary to adjust, first be sure fork and collar are shifted to engage the helical pinion next to the drive gear. Then adjust the stop screw and lock nut in the top of the carrier so that the fork is centered in the collar groove within .005".
2. With fork and collar shifted to engage pinion away from drive gear, adjust stop screw and lock nut in the cross shaft bearing cage so that the fork is centered in the collar groove with .005".
3. When checking shift fork clearance in collar groove, collar must be flush with end face of spur pinion in both the HI and LO speed positions.

TIMKEN (Rockwell-Standard) TRANSFER CASES

See Willys Chapter For It's Transfer Case

INDEX & LUBE CAPACITY

The capacities of these transfer cases are given in vertical (transverse and horizontal) fore and aft position. Transfer cases may be mounted at various angles by the vehicle manufacturer and normally should be filled to the top of the filler neck or bottom of the tapped hole. Capacities will vary depending upon the angle of mounting.

Model	Oil, Pints
T-32	4
T-50	8½
T-59	2
T-70	24
T-73	24
T-76	4
T-77	7
T-79	6
T-96	7
T-98	48
T-99	2½
T-136	14
T-138	8
T-152	5
T-154	9½
T-167	10
T-179	1½
T-180	2
T-212	2
T-221	4
T-223	5
T-226	7
T-236	22

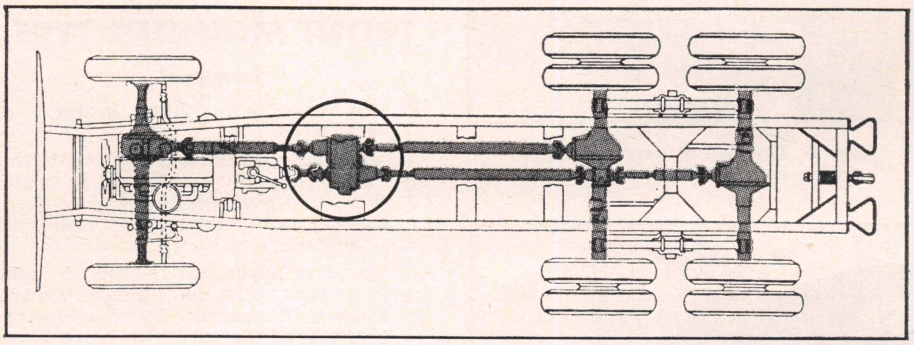

Fig. 1 Typical hook-up of a three shaft transfer case on a 6 x 6 vehicle

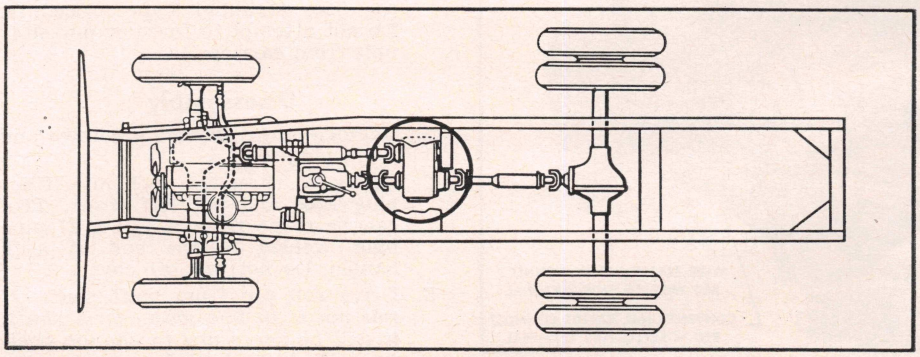

Fig. 2 Typical hook-up of a four shaft transfer case on a 4 x 4 vehicle

DESCRIPTION

A transfer case is a gear box located between the main transmission and the rear axle. Its purpose is to transfer power from the transmission to the front driving axle as well as the rear driving axle. It also provides an extra gear reduction (LO) in the power train of the vehicle.

Most units are available with a Power Take Off and a parking brake. Every unit incorporates a Front Axle Declutch which is used to drive the front axle whenever the vehicle encounters steep grades or rough terrain. These accessories are actuated by separate shift levers located in the cab of the vehicle.

Fig. 1 shows a typical hook-up of a three-shaft transfer case, while Figs. 2 and 3 illustrate a typical hook-up of a four-shaft transfer case used with a 4 x 4 and a 6 x 6 vehicle, respectively.

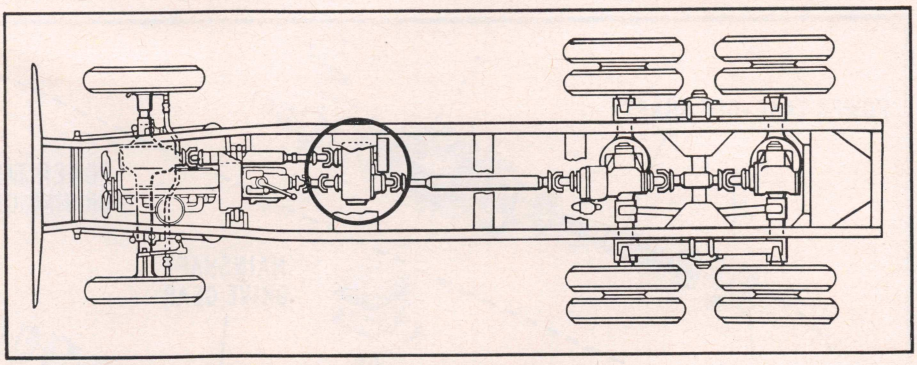

Fig. 3 Typical hook-up of a four shaft transfer case on a 6 x 6 vehicle

Three Shaft Transfer Case

DISASSEMBLY

1. Referring to Figs. 4 and 5, remove drain plug and drain lubricant.
2. Remove power take-off unit and wire shims together for reassembly.
3. Remove front axle declutch unit.
4. Remove input and output shaft yokes or companion flanges.
5. Remove range shift shaft and fork.
6. Remove shift cover. Cover is spring-loaded and should be held down during removal to prevent injury. Take out detent ball, plunger and spring.
7. Loosen shift fork nut and screw shift shaft out of fork and slide it out of case.
8. Loosen set screw in mainshaft driving clutch and remove clutch and oil dam.
9. Drive tapered pins from cover and remove cover.
10. Lift mainshaft assembly from case.
11. Lift out axle drive shaft assembly and then remove idler assembly.

Disassemble Power Take-Off

1. Remove yoke from power take-off shaft.
2. Remove oil filler plug from cage. Then remove detent capscrew, spring and ball.
3. Remove oil seal cage, shims and gasket.
4. Through oil filler plug hole, loosen shift fork set screw. Disconnect shift lever and pull shift shaft from housing.
5. Use a bronze drift and drive power take-off shaft from housing. Remove shift fork and sliding clutch. *Do not disassemble further unless bearings need replacing.*

Disassemble Front Axle Declutch Unit

1. With suitable puller, remove declutch shaft yoke.

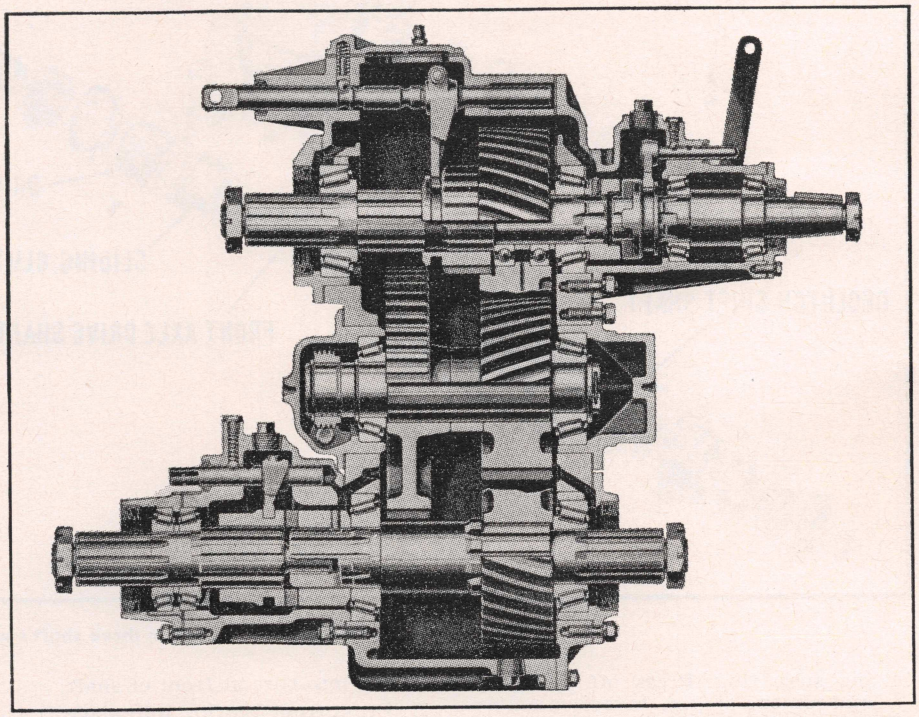

Fig. 4 Timken three shaft transfer case

2. Remove bearing cage from housing.
3. Remove detent parts from housing.
4. Unscrew filler plug and loosen shift fork set screw.
5. Slide shift shaft out of housing. If necessary, remove shift and shaft oil seal.
6. Remove sliding clutch and shift fork.
7. If necessary, press apart bearing cage assembly. Remove outer bearing cup and oil seal.

Disassemble Shaft Assemblies

1. To disassemble mainshaft, press off front bearing and remove sliding gear. Press drive gear, bearing spacer and rear tapered bearing from shaft. Remove ball bearings and spacer from drive gear.
2. To disassemble axle drive shaft, remove set screw and pull off driving clutch. Press rear bearing and gear from shaft. Press off front bearing. Remove pilot bushing from shaft with a suitable puller if necessary.
3. To disassemble idler shaft, remove snap ring at low gear end. Slide off speedometer drive gear and remove Woodruff key. Remove front bear-

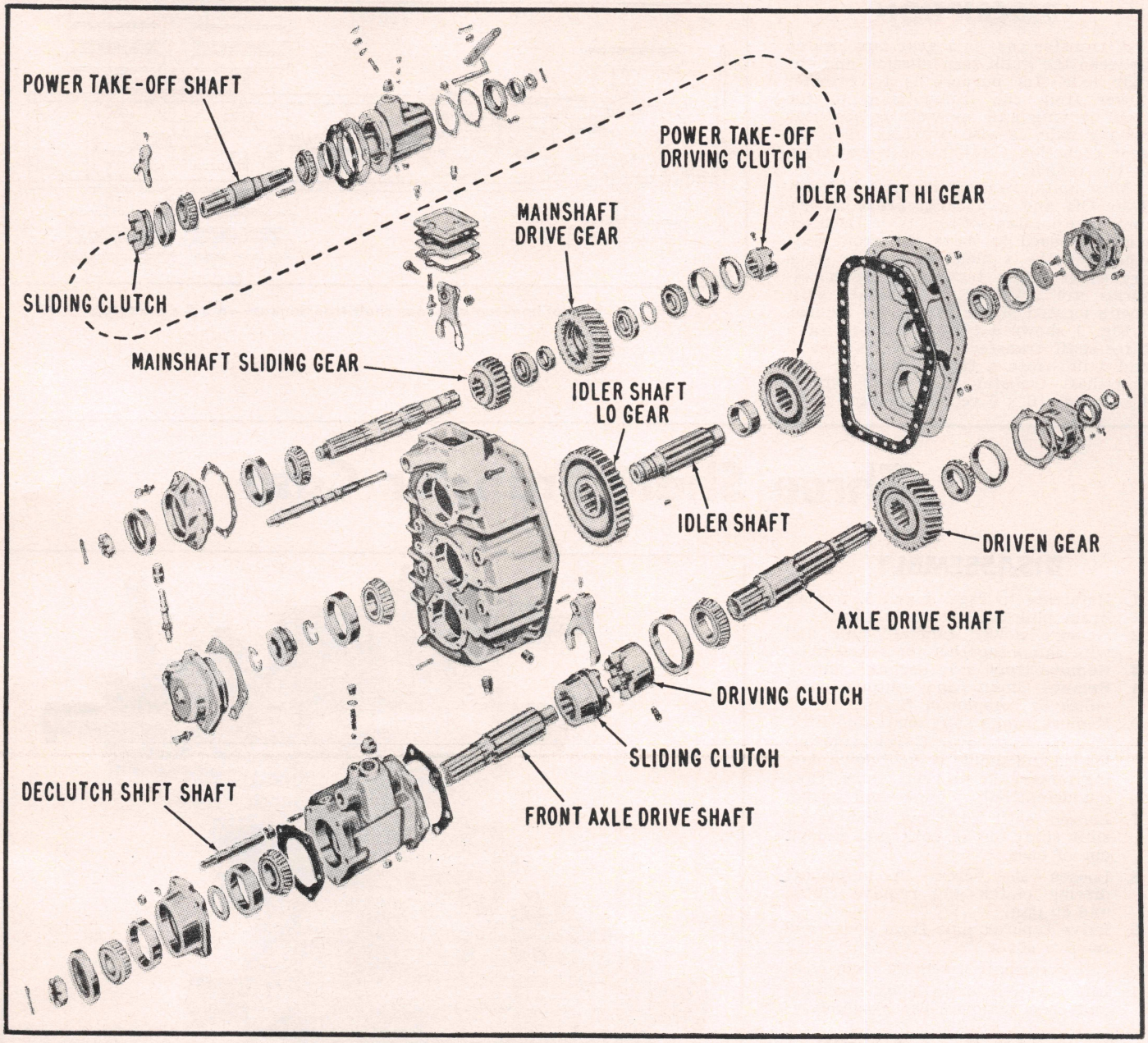

Fig. 5 Disassembled view of a Timken three shaft transfer case

ing snap ring. Press off low gear and remove spacer. Invert assembly and remove bearing retainer. Press off high gear and bearing.

Disassemble Case & Cover

1. Remove mainshaft front seal cage and idler shaft front bearing cap from transfer case housing.
2. Remove idler shaft bearing cover.
3. Pull axle drive shaft rear bearing cage, using puller screws. Wire shims together for reassembly. If necessary, press mainshaft rear bearing cup from cover.

REASSEMBLY

Assemble Axle Drive Shaft

1. Referring to Fig. 6, press pilot bushing into bore at front of shaft.
2. Press front bearing into place.
3. Press driven gear and rear bearing into place, using a suitable sleeve that bears against inner race.
4. Slide driving clutch onto shaft and install set screw. Screw must enter recess in shaft.

Assemble Idle Shaft

1. Referring to Fig. 7, press low gear and tapered bearing into place on shaft. *Use a sleeve that will clear bearing journal.*
2. Install bearing snap ring, and Woodruff key in keyway.
3. Place speedometer drive gear on shaft and install outer snap ring.
4. Invert assembly and install spacer and high gear. Place bearing on shaft and press into position. Install bearing retainer, capscrews and lock wire.

Assemble Mainshaft

1. Referring to Fig. 8, tap rear ball bearing into gear with suitable sleeve against outer race.
2. Position bearing spacer in gear and tap front ball bearing into gear.
3. Press gear assembly onto shaft until it seats against shoulder on shaft.
4. Position spacer and press rear tapered bearing onto shaft.
5. Install sliding gear and front bearing. *Do not install oil dam and power take-off driving clutch until after transfer case cover has been attached.*

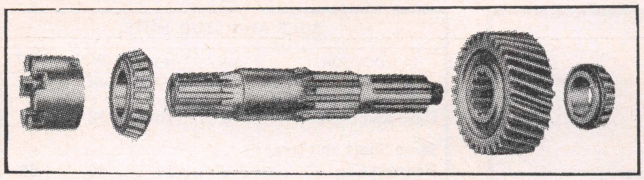

Fig. 6 Axle drive shaft components. Three shaft case

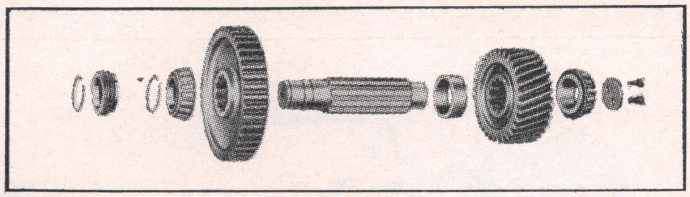

Fig. 7 Idler shaft components. Three shaft case

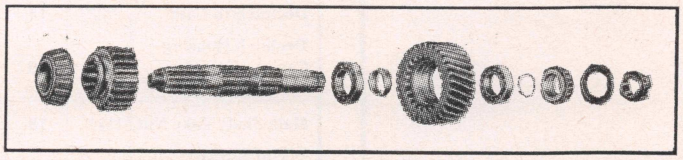

Fig. 8 Mainshaft components. 8hree shaft case

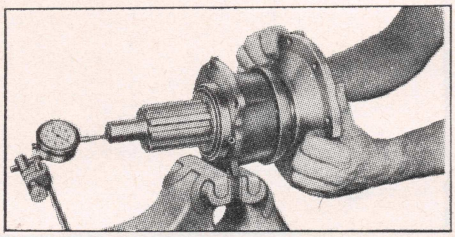

Fig. 10 Checking end play of axle drive shaft

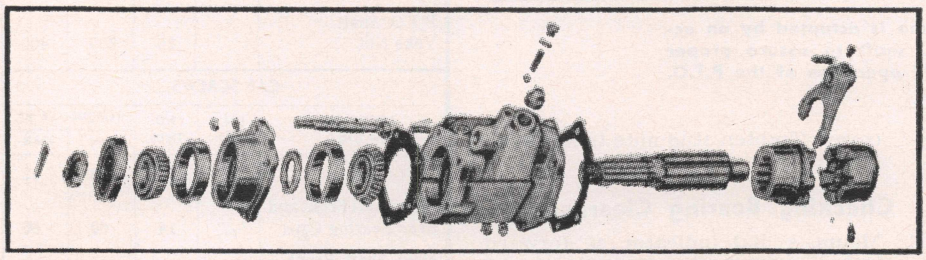

Fig. 9 Front axle declutch unit. Three shaft case

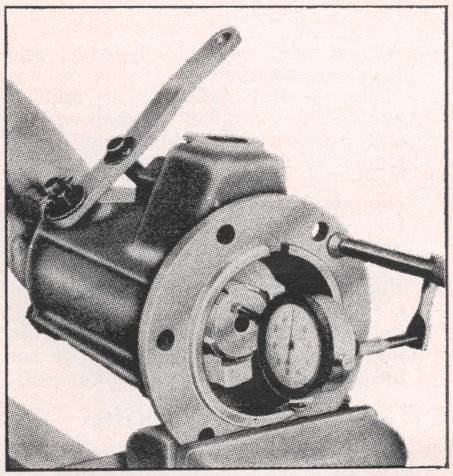

Fig. 12 Checking end play of power take-off unit

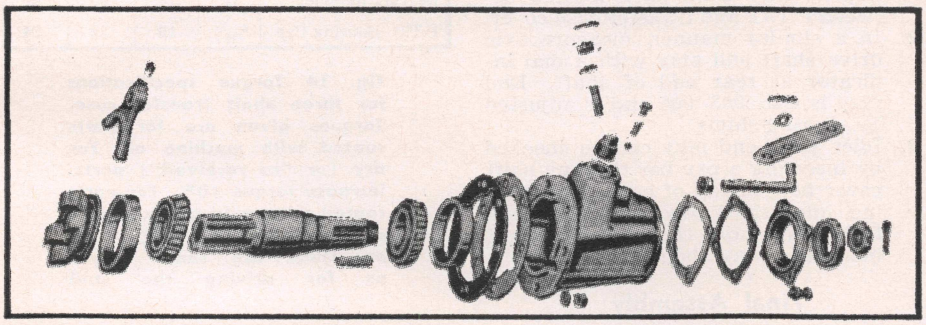

Fig. 11 Power take-off components. Three shaft case

Assemble Front Axle Declutch Unit

1. Referring to Fig. 9, hold shift fork in place inside declutch housing and install sliding clutch. Position fork in groove.
2. Slide shift shaft through housing bore and into shift fork. Install and tighten set screw. Install oil filler plug.
3. Install detent ball, spring, lockwasher and lock screw in housing. Tighten lock screw.
4. Install inner and outer bearing cups in declutch bearing cage.
5. Press inner bearing on shaft with suitable sleeve.
6. Position bearing spacer on shaft and then install bearing cage.
7. Press outer bearing onto shaft. *Do not install oil seal at this time.*
8. Mount cage in vise and install yoke or flange and tighten nut to specified torque.
9. Check bearing adjustment by using a dial indicator at the end of the shaft as shown in Fig. 10. *Since the specified bearing adjustment is zero end play and zero preload, there should be no reading on the dial gauge.*
10. If there is no end play in the assembly, turn the shaft by hand to check for bearing preload. There should be no more than a slight drag on the shaft.
11. If there is end play in the assembly, use a thinner spacer between the bearings; if there is preload, use a thicker spacer.
12. Once the proper adjustment is obtained, remove the yoke or flange and install oil seal in bearing cage.
13. Position a new gasket over studs at front of declutch housing.
14. Line up front axle shaft with sliding clutch and slide shaft and bearing cage into housing.
15. Install lockwashers and stud nuts, tightening nuts to specified torque. Install yoke or flange and tighten nut to specified torque.

Assemble Power Take-Off

1. Referring to Fig. 11, press inner bearing cup into P.T.O. housing with a suitable sleeve.
2. Hold shift fork and sliding clutch in place inside housing.
3. Slide shaft assembly (with inner and outer bearings) into housing. Check to see that shift fork is seated in sliding clutch groove.
4. Install outer tapered bearing cup with a suitable sleeve.
5. Slide clutch shaft into housing and through shift fork.
6. Line up recess in shift shaft and install shift fork set screw and tighten.
7. Install detent ball, spring, lockwashers and capscrew. Tighten capscrew.
8. Attach shift lever to shift shaft.
9. Position new gasket and install enough bearing adjustment shims to set up end play in the assembly.

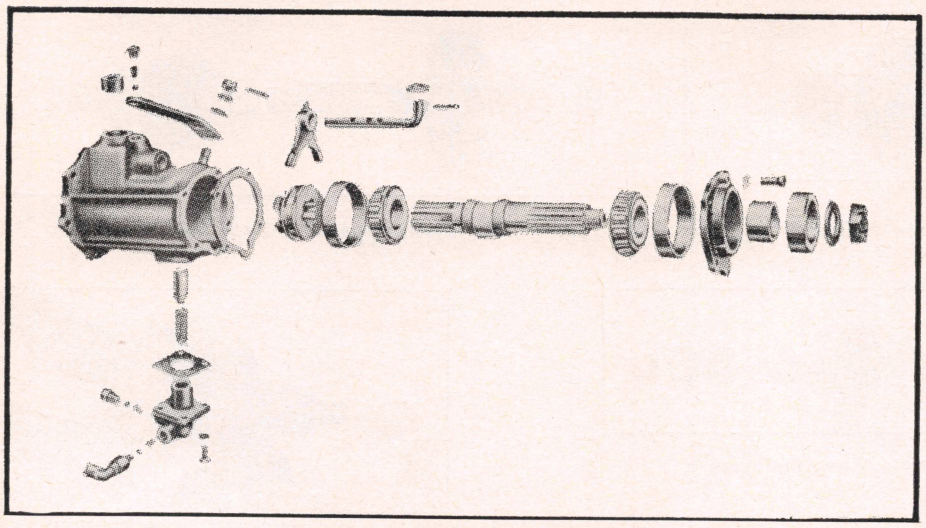

Fig. 13 Pump type P.T.O. Pump is actuated by an eccentric located on the P.T.O. shaft to assure proper lubrication during "stationary" operation of the P.T.O.

BOLT AND STUD NUTS				
LOCATION ON UNIT	DIA. INCH	NO. THDS.	TORQUE—LB FT	
			MIN.	MAX.
Case and Cover	3/8"	16	38	42
Main Shaft and Rear Bearing Cap	7/16"	14	60	66
P.T.O. to Cover	7/16"	14	60	66
Drive Shaft Rear Bearing Cap	7/16"	14	60	66
Declutch to Case	7/16"	14	60	66
Declutch Housing Cap	3/8"	16	38	42
Main Shaft Yoke Nut	1¼"	18	300	400
Declutch Shaft Yoke Nut	1¼"	18	300	400
Drive Shaft Yoke Nut	1¼"	18	300	400
P.T.O. Shaft Yoke Nut	1"	20	300	400

CAP SCREWS				
LOCATION ON UNIT	DIA. INCH	NO. THDS.	TORQUE—LB. FT.	
			MIN.	MAX.
Shift Cover	3/8"	16	38	42
Idler Shaft Front and Rear Bearing Caps	7/16"	14	60	66
Main Shaft Front Bearing Cap	7/16"	14	60	66
Idler Shaft Bearing Retainer	7/16"	14	60	66
P.T.O. Housing Cap	5/16"	18	22	24

Fig. 14 Torque specifications for three shaft transfer case. Torques given are for parts coated with machine oil. For dry (or "as received") parts, increase torque 10%. For parts coated with multi-purpose gear oil, decrease torque 10%. Nuts on studs use same torque as for driving the stud

10. Attach seal cage to housing and tighten capscrews.
11. Using a dial indicator at end of shaft, Fig. 12, check amount of end play in the assembly. End play should be .003-005".
12. Take off seal cage and remove enough shims to establish proper end play. For example, if dial reading is .009", remove .005" of shims to arrive at an adjustment of .004".
13. Reinstall seal cage and tighten capscrews to specified torque. Install yoke or flange and tighten nut to specified torque. See Fig. 13 for optional pump type power take-off.

Installation of Shafts

1. Position axle drive shaft in case.
2. Tilt axle drive shaft to one side and install idler shaft. Then work both assembles into position.
3. Position mainshaft in case and work into position.
4. Reassemble transfer case cover (if disassembled). Use original shim packs under idler shaft and axle drive shaft rear bearing caps.
5. Install transfer case cover but do not tighten nuts at this time. Install dowels; then tighten nuts to specified torque.
6. Install front axle declutch unit with new gasket. Tighten stud nuts to specified torque.
7. Position oil dam and P.T.O. driving clutch on mainshaft and install set screw.
8. Install new gasket and shim pack. Then mount P.T.O. assembly on cover. Tighten stud nuts to specified torque.

Checking Bearing Clearances

1. Mount a dial indicator at forward end of mainshaft and measure end play in assembly. Specified bearing adjustment is .003-.005" end play. To adjust, alter shim pack located between P.T.O. and transfer case cover.
2. In a similar manner, measure axle drive shaft end play with a dial indicator at rear end of shaft. End play is also .003-.005 and is adjusted by altering shims.
3. Idler shaft end play can be checked by inserting a pry bar through shift cover hole at top of case and working idler shaft low gear back and forth. No more than a very slight bit of end play should be felt.

Final Assembly

1. Position shift fork in transfer case so that it fits in groove of mainshaft sliding gear.
2. Slide shift shaft into case and screw it into shift fork.
3. Tighten bolt in shift fork and secure with lockwashers and nut.
4. Install detent ball in transfer case Position plunger in detent spring and install in case.
5. Place shift fork cover gasket, breather plate and cover on case. Press cover down to compress detent plunger spring. Hold down cover and install lockwashers and capscrews.
6. Install yoke or flange on mainshaft and tighten nut to specified torque.
7. Install companion flange at rear of axle drive shaft. Tighten nut to specified torque.

Lubrication

Install and tighten drain plug. Turn transfer case upright and pour ½ pint of recommended lubricant through filler plug opening. Add some oil to P.T.O. and front axle declutch unit. Do not fill unit to specified level until it is installed in the vehicle. Test operation of transfer case in all ranges.

Four Shaft Transfer Case

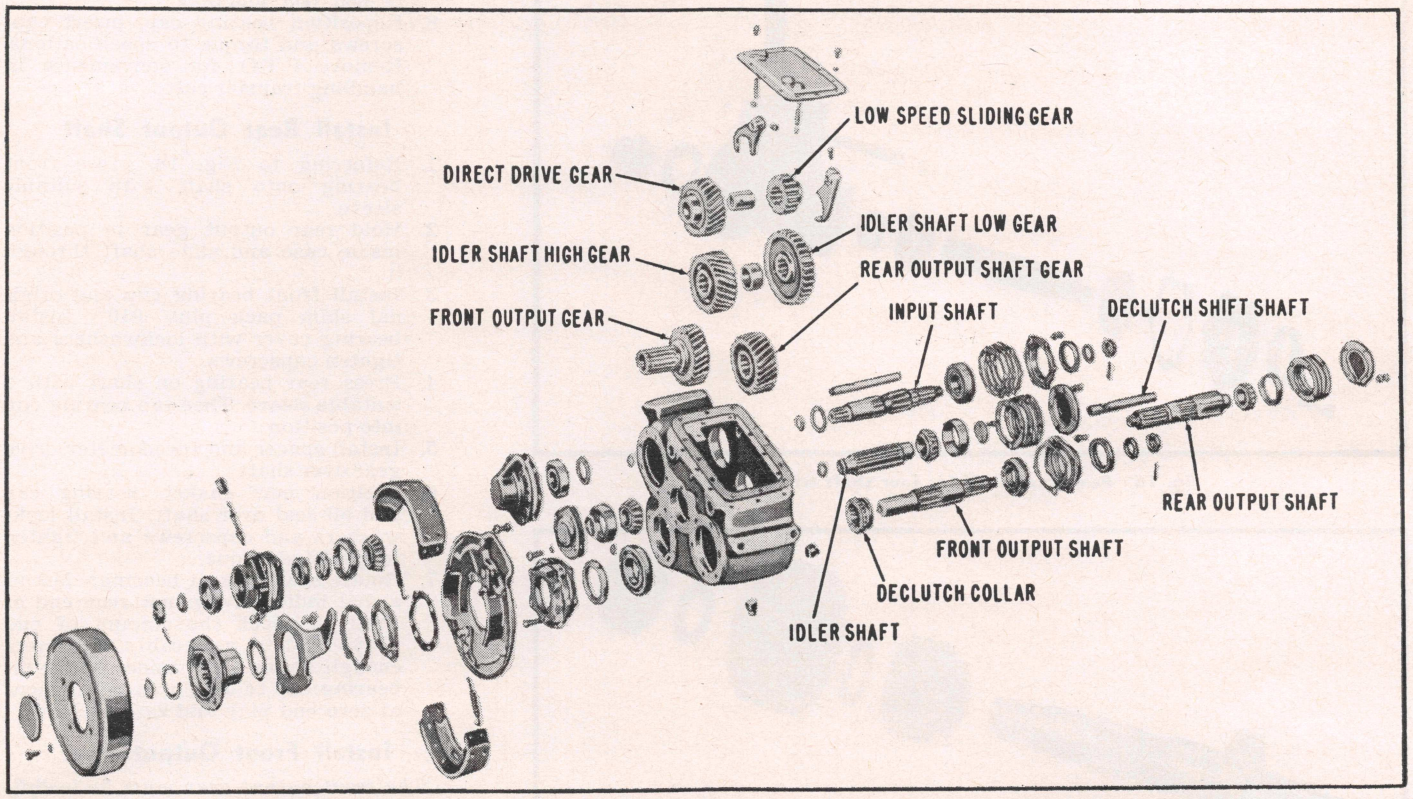

Fig. 15 Timken "clover leaf" four shaft transfer case

DISASSEMBLE

1. Referring to Fig. 15, remove all yokes or flanges.
2. Remove P.T.O. assembly or rear cover if P.T.O. is not used.
3. Remove transfer case cover.
4. Remove detent balls and springs.
5. Pull both shift shafts out through front of case if possible. Otherwise, use a soft metal drift and drive shafts and expansion plugs out through rear of case.
6. Remove oil seals from front of case if necessary.
7. Lift out range and declutch forks.
8. Pull front output shaft and declutch collar from case.
9. Slide a bar through front output shaft gear and tap out small and large expansion plugs located in brake section.
10. Remove brake drum, brake hub retaining ring and hub with a suitable puller. Remove brake shoes and lever, and brake backing plate.
11. Remove idler shaft front and rear bearing caps. Wire forward cap shims together for reassembly.
12. Remove bearing retainer plate from front end of idler shaft and press shaft out through rear of case. Lift out low gear, spacer and front bearing.
13. Remove high gear. Tap front bearing cup from case. Remove snap ring and press rear bearing from idler shaft.
14. Remove front output gear rear bearing cap and gasket.
15. Take off bearing snap ring and tap front output gear into case. Reach through cover opening and lift out gear and bearing. Press off radial bearing.
16. Take off rear output shaft front and rear bearing caps. Wire shims together for reassembly.
17. Remove input shaft front bearing cover. Wire shim pack together for reassembly.
18. Using a block of wood between sliding gear and case, press out input shaft and front bearing. Do not pound on shaft if gear becomes bound. Lift out sliding gear, drive gear and spacer. Remove front bearing from shaft.

REASSEMBLY

Assemble P.T.O. Unit

1. If this unit was disassembled, refer to Fig. 16 and proceed as follows:
2. Install ball bearings on P.T.O. shaft.
3. Position wiper against inner bearing. Install snap ring in groove of outer bearing.
4. Slide shaft into housing and install sliding clutch on inner end.
5. Position new gasket and install oil seal cage.
6. Place shift fork in groove of sliding clutch. Slide shift shaft into bore of fork.
7. Line up recess in shaft with set screw and tighten screw. Lock wire set screw to fork.
8. Install expansion plug in shift shaft hole.
9. If necessary, replace shift shaft oil seal in front of housing.

Assemble Input Shaft

1. Referring to Fig. 17, install front bearing on shaft with shielded side against shoulder.
2. Start shaft into case. Mount sliding gear, spacer and drive gear (with bushing) on shaft.
3. Tap shaft into position using a suitable sleeve against inner race of front bearing.
4. Position original shim pack plus .010" more to make sure there is end play in the assembly. Install front cover and tighten capscrews.
5. Place thrust washer on shaft and install rear bearing with shielded side toward inside.
6. Position new gasket and attach the P.T.O. or cover to rear side of case.

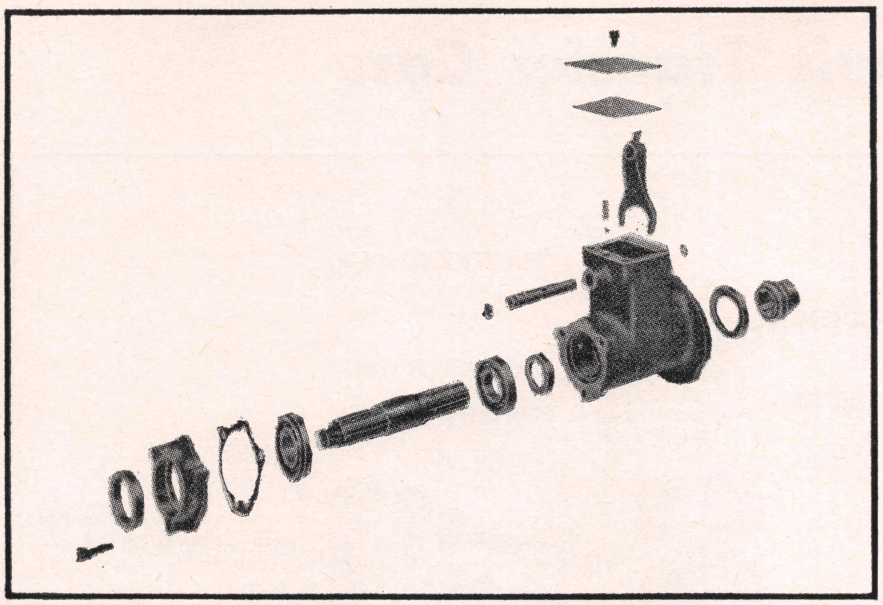

Fig. 16 Power take-off for four shaft transfer case

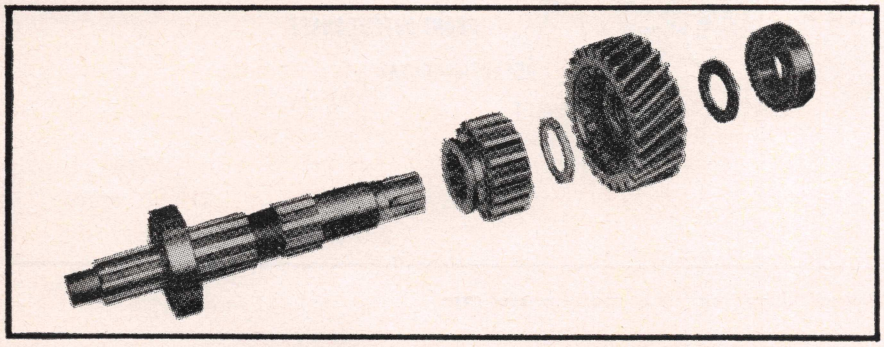

Fig. 17 Input shaft components. Four shaft case

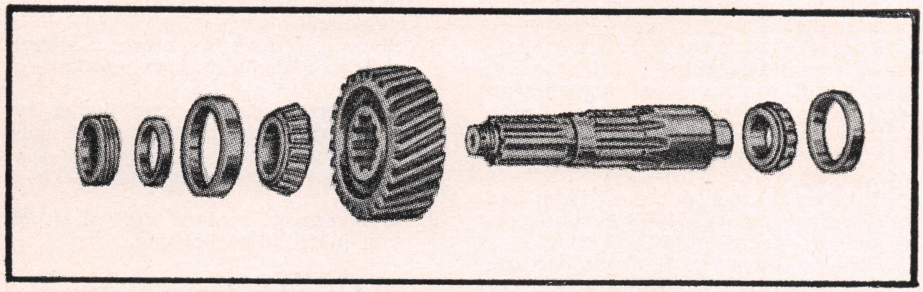

Fig. 18 Rear output shaft components. Four shaft case

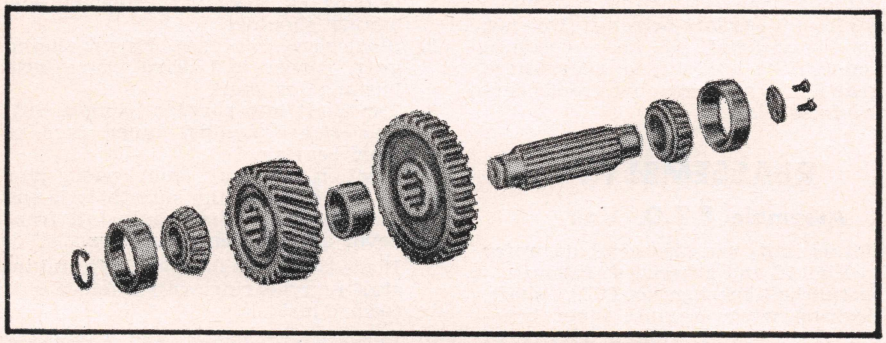

Fig. 19 Idler gear components. Four shaft case

7. Mount a dial indicator on the unit. Set the stem against the front end of the input shaft and check the amount of end play in the assembly. Remove enough shims from under the bearing cap to arrive at an adjustment of .003-.005″ end play.
8. Reposition bearing cap, insert capscrews and torque to specifications. Remove P.T.O. for convenience in handling transfer case.

Install Rear Output Shaft

1. Referring to Fig. 18, press front bearing onto shaft with suitable sleeve.
2. Hold rear output gear in position inside case and slide shaft through it.
3. Install front bearing cup and original shim pack plus .010″. Install bearing cover with lockwashers and tighten capscrews.
4. Press rear bearing on shaft with a suitable sleeve. Then tap bearing cup into position.
5. Install spacer and speedometer drive gear over shaft.
6. Position new gasket, bearing cap and oil seal over shaft. Install lockwashers and capscrews and tighten to specified torque.
7. Rotate shaft to seat bearings. Mount a dial indicator against rear end of shaft to check the amount of end play in the assembly. Remove enough shims from under the front bearing cap to obtain an adjustment of zero end play and zero preload.

Install Front Output Gear

The front output gear must be installed in the case before the idler assembly is installed.

1. Install ball bearing on hub of gear.
2. Position gear and bearing in case and install snap ring on bearing.
3. Install rear bearing cap over new gasket. Insert capscrews and lockwashers and tighten to specified torque.

Install Idler Gear

1. Referring to Fig. 19, press rear bearing on idler shaft. Install snap ring.
2. Hold high gear in position inside case and tap idler shaft through it with a soft hammer. Short hub side of gear goes to the outside (rear).
3. Install rear spacer on shaft and then install low gear with long hub toward outside (front) of case.
4. With shaft in position, install rear bearing cup in case. Use a new gasket and install rear bearing cap, lockwashers and capscrews. Tighten to specified torque.
5. Drive front bearing onto idler shaft. Hold shaft rigid to avoid damaging rear bearing and cup. Install bearing retainer plate. Lock wire capscrews.
6. Tap front bearing cup into place.
7. Install enough shims to set up end play in the idler assembly. Install front bearing cap and secure with lockwashers and capscrews.
8. Mount a dial indicator on the case with the stem set against the inside face of the low gear. Check the

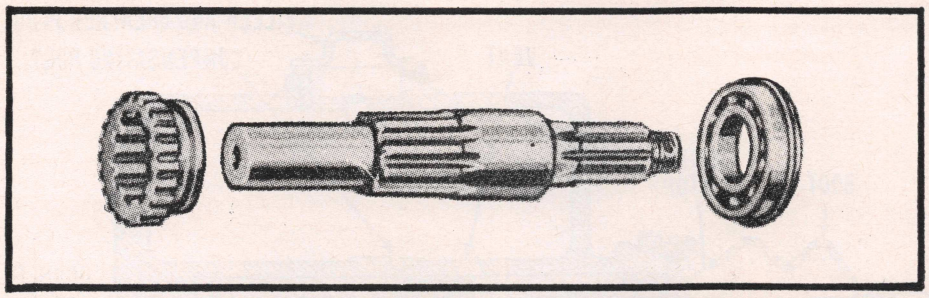

Fig. 20 Front output shaft components. Four-shaft case

LOCATION ON UNIT	DIAMETER	NO. THREADS	TORQUE—LB. FT. Min.	TORQUE—LB. FT. Max.
Top cover	3/8"	16	38	42
Bearing caps (all)	3/8"	16	38	42
Brake drum	7/16"	14	60	66
Brake mounting	7/16"	14	60	66
P.T.O. to case	3/8"	16	38	42
P.T.O. bearing cap to housing	3/8"	16	38	42
P.T.O. top cover	3/8"	16	38	42
YOKE OR FLANGE NUTS				
Input shaft	1"	20	300	400
Front output shaft	1"	20	300	400
Rear output shaft	1"	20	300	400
P.T.O. shaft	1"	20	300	400

Fig. 21 Torque specifications for four shaft transfer case. Torques given apply to parts coated with machine oil. For dry (or "as received") parts, increase torque 10%. For parts coated with multi-purpose gear oil, decrease torque 10%. Nuts on studs use same torque as for driving the stud

amount of end play by working the assembly back and forth with two pry bars. Remove enough shims to obtain .003-.005" end play.

Install Front Output Shaft

1. Referring to Fig. 20, install bearing on shaft with bearing snap ring toward outside.
2. Install sliding collar on shaft and slide shaft into case.
3. With shaft in position, install new gasket, bearing cap and oil seal, lockwashers and capscrews. Tighten to specified torque.

Install Parking Brake

1. Position new gasket and mount backing plate, deflector and stamped washer. Insert capscrews and star washers and tighten to specified torque.
2. Position brake lever on backing plate.
3. Position brake shoes on backing plate with actuating pawl in web slot.
4. Hook up brake shoe return springs.
5. Slide brake hub over splines of front output gear. Install retaining ring.
6. Install brake drum. Tighten capscrews to specified torque and lock with wire.
7. Install expansion plugs. The smaller plug goes in the bore of the front output gear and the larger in the brake drum.

Install Shift Shafts

1. If necessary, install new shift shaft oil seals in case.
2. Position declutch fork in collar.
3. Grease declutch shift shaft and slide it into case and through fork.
4. With shift shaft in position, insert and tighten set screw and lock with wire.
5. Position range shift fork in sliding gear.
6. Slide range shift shaft through fork. Install and tighten set screw and lock with wire.
7. Install expansion plugs at rear of case.
8. Place detent balls and springs in case.
9. Install cover with new gasket and tighten capscrews to specified torque.
10. Install P.T.O. with new gasket.
11. Install yokes or flanges and nuts and torque to specifications.

Lubrication

Install drain plug. Turn transfer case upright and pour ½ pint of recommended gear lubricant through filler plug opening. Add some oil to P.T.O. Do not fill unit to specified level until it is installed in the vehicle.

HYDRAULIC BRAKE SYSTEM

The hydraulic system used to actuate the brake mechanism consists of a compensating type master cylinder in which the hydraulic pressure is originated, individual wheel cylinders in which the hydraulic pressure is applied to actuate the brake shoes against the brake drums, and the fluid lines consisting of steel tubing, flexible hose, brackets and unions interconnecting the master cylinder and wheel cylinders. The master cylinder and wheel cylinders are fitted with pistons, all of which are provided with cup seals to maintain fluid pressure and prevent loss of brake fluid.

Depressing the brake pedal moves the piston within the master cylinder, thus displacing the brake fluid from the master cylinder through its outlet orifices, tubing and flexible hose connections into the wheel cylinders. The brake fluid, being non-compressible, enters each of the wheel cylinders, causing the cylinder pistons to move outward and actuate the brake shoes. As pressure on the pedal is increased, greater hydraulic pressure is built up within the wheel cylinders, and consequently greater force is exerted against the shoes.

When the pressure of the pedal is released, the brake shoe retracting springs return the brake shoes to their normal or released position. The return movement of the brake shoes, in turn, causes movement of the wheel cylinder pistons toward their released position, thus forcing the fluid back through the tubing into the master cylinder.

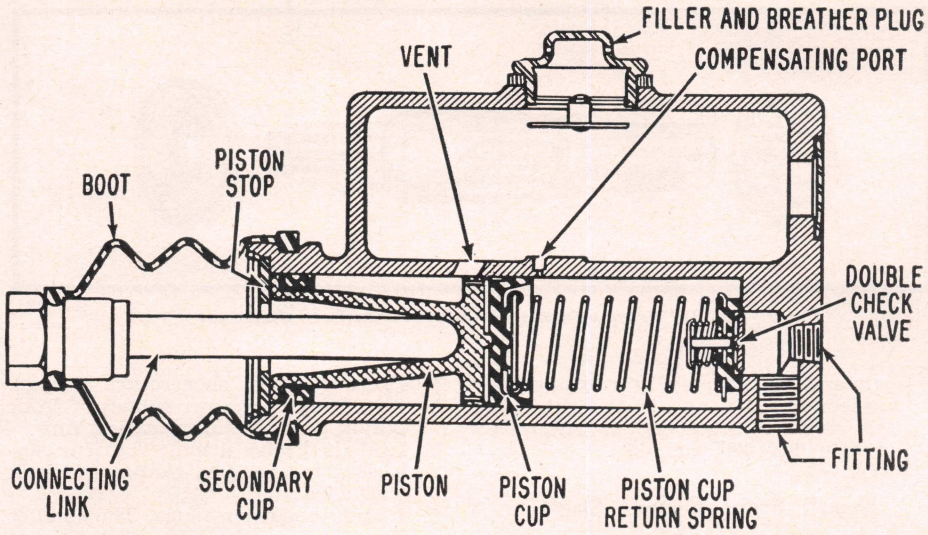

Fig. 1 Typical master cylinder

Hydraulic Fluid

Always use heavy duty hydraulic brake fluid. The use of other types of fluid or the introduction of mineral base oil into the system will cause rubber parts to swell and become inoperative.

Master Cylinders

The typical master cylinder consists of the components shown in Figs. 1 and 2. The fluid reservoir or supply tank is cast integrally over the master cylinder barrel. A combination filler and breather plug permits atmospheric pressure on the reserve fluid at all times.

Depression of the brake pedal causes the piston and cup to move forward in the cylinder barrel. A slight forward movement of the cup closes the compensating port and the pressure stroke commences. Actual pressure is not built up until the displaced fluid has caused all brake shoes to make contact with their brake drums. Additional pressure on the pedal produces hydraulic pressure within the brake system.

Release of the brake pedal after each brake application permits the brake pedal and push rod to return independently to their off positions. The return of the piston and cup is accomplished by the piston return spring.

The piston for this type of unit is designed to carry a primary cup and a secondary cup. The construction of the piston is such that reserve fluid from the tank passes through a vent in a recessed area. Thus we have fluid on both sides of the primary cup. The secondary cup is merely a seal to prevent loss of reserve fluid into the boot.

These master cylinders are also known as the compensating type. Its primary compensating function is to maintain a constant volume of fluid in the system at all times, regardless of expansion caused by heat, or contraction caused by cold. The secondary compensating function is the replacement of additional fluid into the system to counterbalance any loss due to gravity seepage.

The return to the off position of the piston and cup is much faster in displaced volume than the return of the fluid through the fitting into the master cylinder. A momentary vacuum is created in the cylinder barrel and additional fluid is drawn into the system through drilled holes in the piston and past the lip of the cup. The operating fluid returns more slowly from the wheel cylinders and lines back into the master cylinder barrel. Thus the master cylinder is full of fluid for the next brake application.

Fig. 2 illustrates a master cylinder with a bleeder valve located in the cylinder barrel. This bleeder valve is commonly used in the larger stroke master cylinders. Its purpose is to expell any air that may be trapped in the upper head end of the cylinder barrel.

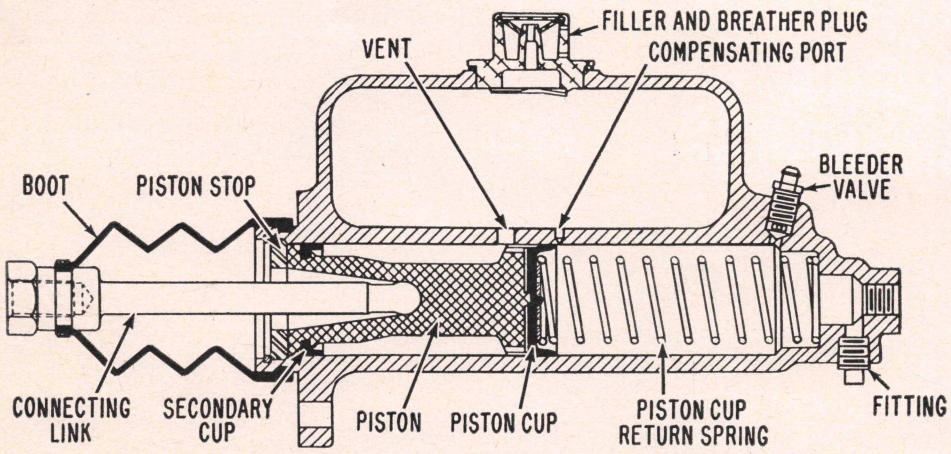

Fig. 2 Master cylinder with bleeder valve. This unit does not have a double check valve as it is used with a vacuum power cylinder having this type valve

Master Cylinder Check Valve

A double check valve is used in all master cylinders of the compensating type. It is held in the closed end of the master cylinder barrel by the piston cup return spring. The valve performs two functions:

1. It acts as a seal to prevent fluid or air being drawn into the system through the bleeder screw during the bleeding operation. Fluid passed

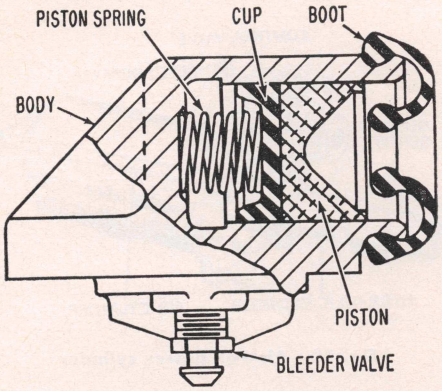

Fig. 3 Single piston type wheel cylinder

through the valve on the pressure stroke can return into the master cylinder barrel only by raising the entire valve from its seat. The valve is held in place by the cup return spring.

2. When the pressure on the returning fluid drops below 6 to 8 pounds, the spring closes the valve and the system is under a slight pressure. This pressure will not cause the brake shoes to drag; it is used to assure a positive seal at the wheel cylinder cups. The valve does not control brake pedal movement. *Do not try to remedy this complaint by changing the valve.*

Note

On vehicles equipped with certain models of power cylinders, the check valve is located in the power cylinder slave cylinder tube. Where this is the case, no check valve is used in the master cylinder.

Wheel Cylinders

Two types of wheel cylinders are used in the hydraulic brake system. Different combinations of these two types of cylinders are used on different model vehicles. Fig. 3 illustrates a single piston wheel cylinder, and Fig. 4 shows a double piston type. The wheel cylinder is the unit that changes the applied hydraulic pressure into mechanical force to actuate the brake shoes.

Master & Wheel Cylinder Repairs

It is possible to rehone the majority of cylinders and place them in good working order. However, this requires the use of honing equipment and plug gauges, which are available through auto parts jobbers.

Cylinders and parts should not be washed in gasoline, kerosene or oil. Use high grade denatured alcohol.

Fluid Level

Inspect the master cylinder at the time of making brake adjustments. Fluid should be within ¾" from the top of the filler neck. Do not fill the supply reservoir to the top of the filler neck. When removing the filler cap, extreme care must be used to prevent dirt or moisture from entering the master cylinder.

Brake Pedal Adjustment

When the brake control system is in the release position, the foot brake pedal should have ¼" free travel before the pressure stroke starts. This free travel is required to prevent blocking of the compensating port in the master cylinder. *Brakes will drag if the compensating port becomes blocked due to pressure building up in the system.* Shorten the pedal push rod to allow the piston to uncover the compensating port, allowing fluid to escape into the reservoir.

Bleeding the Lines

Any air inside the hydraulic system must be removed. Whenever a line has been disconnected at the master cylinder, the entire system must be bled at all wheels until all air is completely expelled. When a line has been disconnected at any wheel cylinder, this cylinder together with the cylinder on the opposite wheel must be bled. Air in the system will cause a springy, rubbery action of the brake pedal. Should a sufficient quantity of air be introduced into the system, the brake pedal will go to the toe-board under normal pressure.

Fill the master cylinder reservoir with heavy duty brake fluid and see that it is kept at least half-full during the entire bleeding operation.

Vehicles equipped with brake booster units (vacuum and "Air-Pak" cylinders) require bleeding these units before any other units of the hydraulic system is bled. Figs. 5 to 10 illustrate the location of the bleeder valves on the various vacuum and air-pak units. See *Brake Booster* chapter for repairs on these units.

Bleeding Instructions

Bleed the power cylinder and wheel cylinders with the engine stopped. If the master cylinder has a bleeder valve, bleed it first before bleeding the wheel cylinders. If equipped with a power cylinder, bleed the power cylinder first at the control valve (No. 1) and then in the slave cylinder (No. 2) as shown in the illustrations. The procedure is as follows:

1. Attach bleeder tube (rubber) to bleeder valve No. 1. Insert end of tube into a clean glass jar containing a small amount of brake fluid.
2. Unscrew bleeder valve ¾ turn and depress brake pedal by hand. Allow pedal to return to the off position.
3. Repeat bleeding operation at bleeder valve No. 2.
4. Finally, bleed the wheel cylinders in any convenient order.

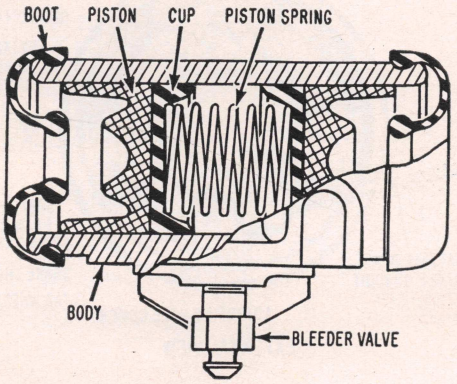

Fig. 4 Double piston type wheel cylinder

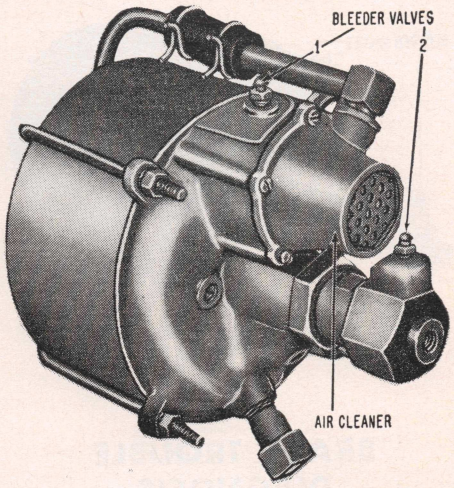

Fig. 5 Single 6¾" diameter piston power cylinder with integral air cleaner

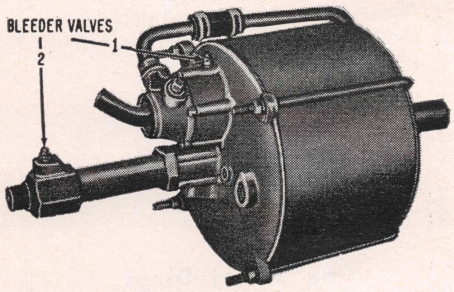

Fig. 6 Single 6¾" diameter piston power cylinder ("C" Series)

Service Note

Bleeding instructions for all vehicles having a check valve in the master cylinder are to allow the pedal to return to the off position *slowly*. However, in brake systems where the check valve is located in the slave cylinder end of the power cylinder, the pedal must be allowed to *snap back quickly*. This rapid return of the pedal allows the master cylinder barrel to receive brake fluid from the master cylinder reservoir on the return stroke and not just draw the fluid back out of the lines when the pedal is released.

Pumping the pedal forces fluid into the glass jar and carries with it any air that might be in the system. Watch the flow of fluid from the tube, the end of which should be kept below the surface of the fluid in the jar. When all air bubbles cease to appear, or when the stream is a solid fluid mass, close the bleeder valve.

Fluid withdrawn in the bleeding operation should not be used again. Fluid should be replenished in the reservoir after each valve is bled. Should the reservoir be drained during the bleeding operation, air will enter the system and the bleeding operation will have to be repeated.

HYDRAULIC BRAKE SYSTEM

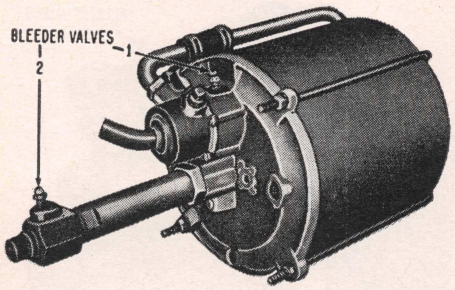

Fig. 7 Single 9½" diameter piston power cylinder ("C" Series)

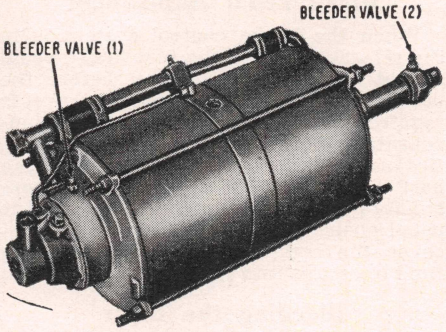

Fig. 8 Tandem 9½" diameter piston power cylinder ("C" Series)

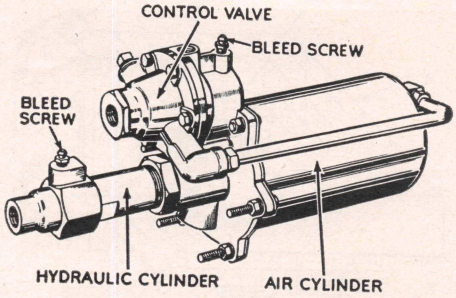

Fig. 10 Air-Pak power cylinder

BRAKE TROUBLE DIAGNOSIS

Pedal Goes to Floor

1. Normal wear of lining.
2. Brakes not properly adjusted.
3. Leak in system.
4. Air in system.
5. Pedal improperly set.
6. No fluid in reservoir.

All Brakes Drag

1. Mineral oil in system.
2. Pedal improperly set.

One Wheel Drags

1. Weak brake shoe return spring.
2. Brake shoe set too close to drum.
3. Piston cups distorted.
4. Loose wheel bearings.

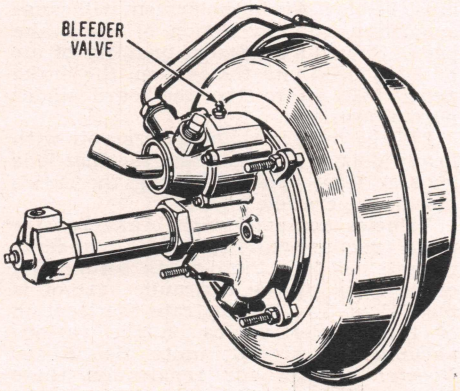

Fig. 9 Diaphragm type power cylinder. Note that only one bleeder valve is used

Pulls to One Side

1. Grease-soaked lining.
2. Shoes improperly set.
3. Backing plate loose on axles.
4. Front spring U-bolts loose.
5. Different makes of lining.
6. Tires not properly inflated.

Springy, Spongy Pedal

1. Brakes not properly adjusted.
2. Air in system.

Excessive Pressure On Pedal, Poor Stop

1. Brakes not properly adjusted.
2. Improper lining.
3. Oil in lining.
4. Lining making partial contact.

Light Pressure On Pedal, Severe Brakes

1. Brakes not properly adjusted.
2. Loose backing plates on axles.
3. Grease-soaked lining.

BRAKE ADJUSTMENTS

BENDIX DUO-SERVO BRAKE

This type brake, Fig. 1, is self-energizing in both forward and reverse. Each brake has one wheel cylinder mounted at the top of the backing plate below the single anchor pin. The anchor pin holds the wheel cylinder in place, being inserted through a flange on the wheel cylinder casting. Shoe return springs hold the upper end of the shoes against the pin with the brakes released. A guide plate, installed on the anchor pin outside of the shoe webs, holds the upper end of the shoes in alignment. Brake shoe lower guides, riveted to the backing plate, are also used on some models.

Brake adjustment is made at the adjusting screw in the adjusting link assembly. The link spring holds the shoe ends in place in the link ends. The link spring also serves as a lock for the notched adjusting screw.

Each brake shoe is held against three

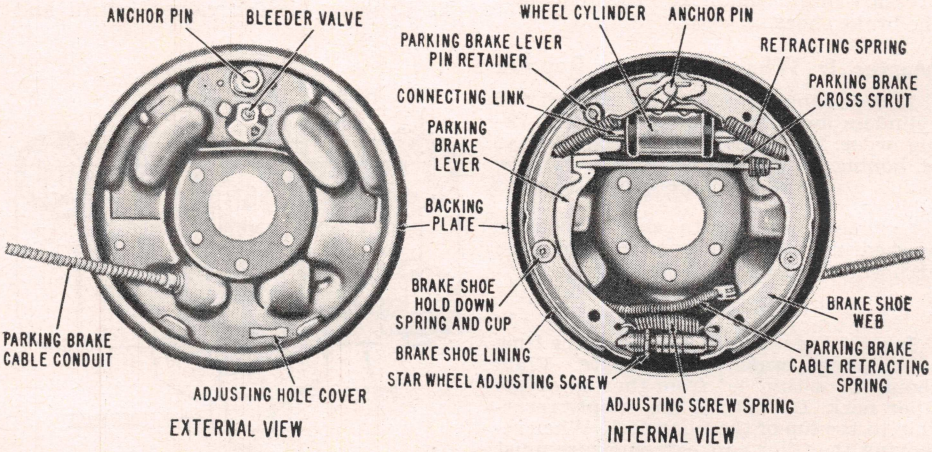

Fig. 1 Bendix duo-servo single anchor brake with star wheel adjuster

bearing surfaces on the backing plate by the hold-down pins and springs. Lining on the secondary (rear) shoe is longer than the lining on the primary (front) shoe.

Unless the vehicle has a transmission parking brake, the rear brake assemblies have a parking brake lever attached by a cable to the secondary shoes. A strut between the primary and secondary shoes assures braking action by both shoes. Parking brake action is entirely mechanical and operates independently of the hydraulic brake system.

Adjustment, Fig. 1

Before attempting to make any adjustments, be sure the wheel bearings are properly adjusted and that the brake backing plates are tight.

1. Jack up wheels clear of floor and release parking brake.
2. Remove adjusting hole covers.
3. Insert screwdriver or special adjusting tool in slot of backing plate to engage star wheel adjusting screw.
4. Move outer end of tool toward axle, expanding brake shoes to a point where the wheel can just be turned by hand.
5. Parking brake cable (if used) adjustment should be made at this time. With brake shoes still expanded, disconnect parking brake cable at intermediate lever end. With parking brake lever applied approximately one inch from fully released position, pull cables by hand to remove all slack. Then adjust cables as required at yoke ends so that clevis pins can be inserted.
6. Back off star wheel adjusting screw until brake drums turn freely. It may be necessary to tap the backing plate lightly to permit brake shoes to assume a central position.
7. Pull parking brake lever back until rear wheel can just be turned by hand. Check rear wheels for equal brake drag. If drag is unequal, loosen the tight brake until drag is equal on both rear wheels.

Anchor Pin Adjustment

On some models, an adjustable anchor pin is provided for when brakes have been relined or when brake action is unequal or severe. Some vehicles have the adjustable anchor on all four brake assemblies while others have it on the front wheels only.

1. Loosen nut on anchor pin at inner side of backing plate, then retighten nut ¼ turn beyond finger-tight.
2. Remove adjusting hole cover from backing plate and turn star wheel adjuster to expand brake shoes until a heavy drag is felt when turning the brake drum by hand.
3. While continuing to expand shoes, periodically tap backing plate adjacent to the anchor pin to cause the anchor pin to center itself. When brake drag can no longer be relieved by tapping on the backing plate, hold anchor pin and tighten lock nut securely.
4. Back off star wheel adjuster just enough to eliminate brake drag. After adjustment is completed, install adjusting hole covers.

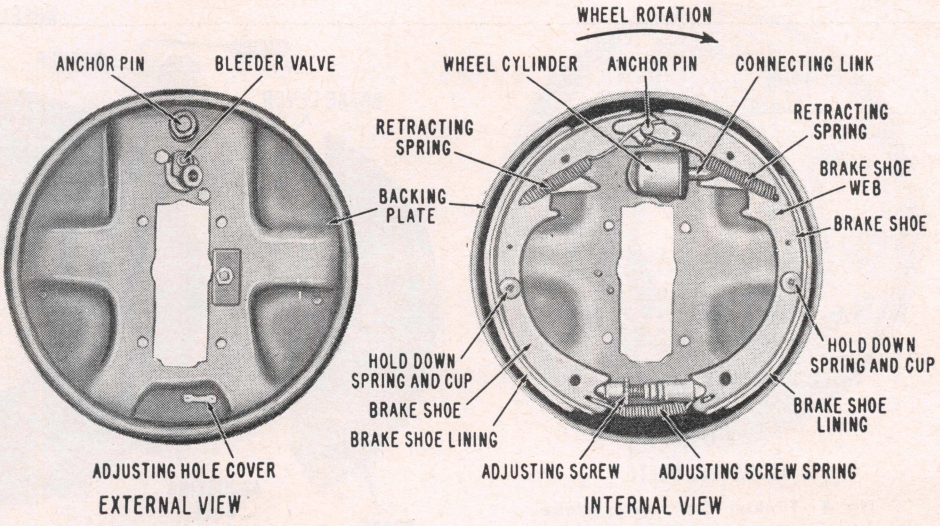

Fig. 2 Bendix uni-servo single anchor brake with star wheel adjuster

BENDIX UNI-SERVO BRAKE

This type brake, Fig. 2, is essentially the same as the duo-servo type except that a single end wheel cylinder is used instead of the double end type shown in Fig. 1. Adjustments are also the same as outlined for the duo-servo type.

It should be noted that some models of this type brake had the wheel cylinder mounted on the side of the assembly instead of the top as shown in Fig. 2.

BENDIX NON-SERVO BRAKE

This type brake, Fig. 3, has the upper end of the shoes extending through the wheel cylinder boots and contacting inserts in the wheel cylinder pistons. The shoe ends are held firmly against the pistons by the brake shoe return springs. The lower end of the shoes are held against a fixed anchor plate by the anchor spring. A hold-down spring at the center of each shoe holds the shoes in alignment. An eccentric adjustment located near the center of each shoe provides a means of compensating for lining wear and is the only shoe adjustment required.

Adjustment

1. With wheels raised clear of floor and hand brake released, turn forward shoe adjusting cam until a heavy drag occurs. Then turn the cam in the opposite direction until the drum is just free of drag.
2. Repeat with the rear shoe.

TIMKEN "DH" BRAKE

This brake, Fig. 4, commonly referred to as the Duplex Brake, is an hydraulically-actuated dual primary assembly. It features identical shoe and liner assemblies and four identical return springs which simplify assembly and disassembly, Fig. 5.

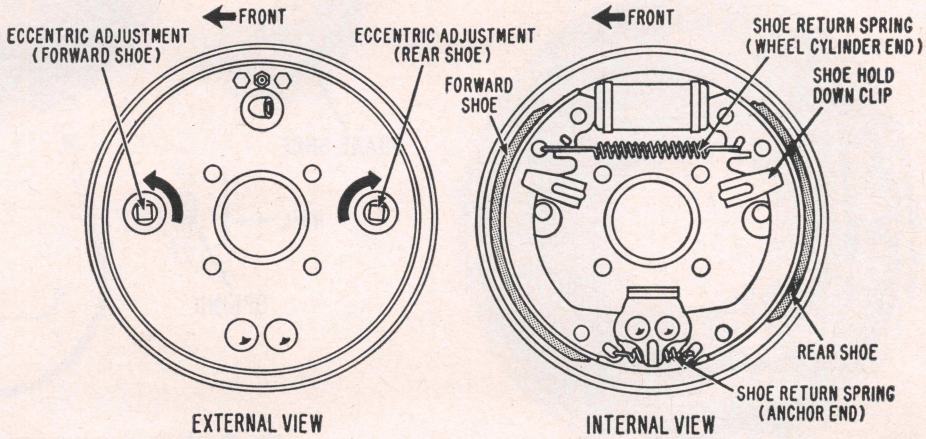

Fig. 3 Bendix non-servo brake of the floating shoe type with an eccentric cam adjustment for each shoe

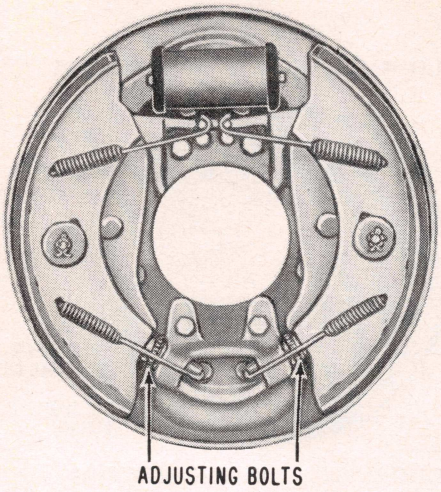

Fig. 4 Timken "DH" series brake

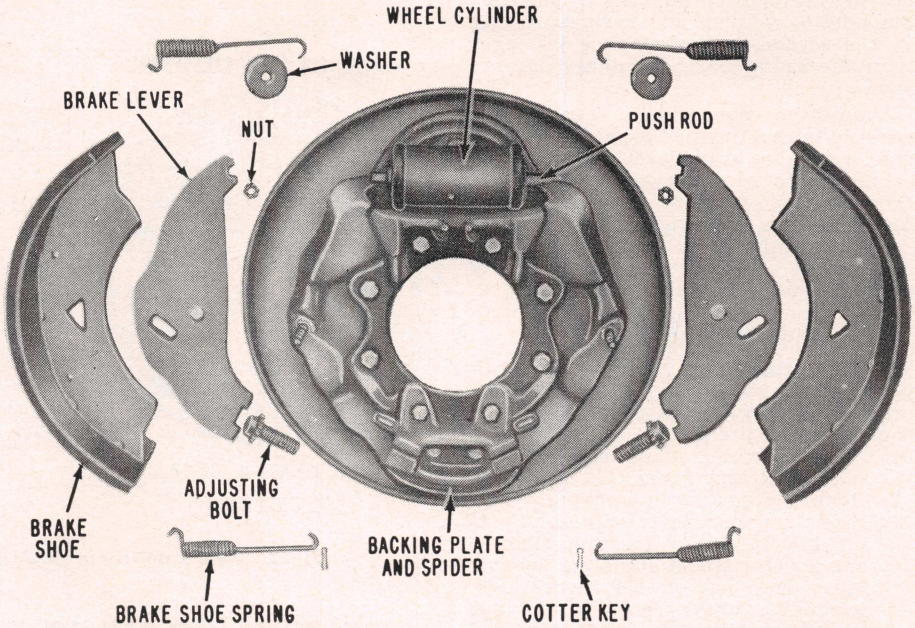

Fig. 5 Timken "DH" series brake components

Adjustment

Brake is adjusted from the back face of the backing plate at the slotted holes. Insert screwdriver through slotted hole against ratchet lugs of adjusting bolts and move end of handle up or down as a lever, depending on rotation desired.

Shoe liners should be brought out against the brake drum until a slight drag can be felt while the drum is in rotation. Adjusting bolt should then be backed off until drum can rotate freely. Brake shoes should be adjusted individually.

TIMKEN "FSH" BRAKE

This brake, Fig. 6, is a floating shoe hydraulic assembly. Actuation permits the shoes to center themselves in the drum with equal effectiveness in either direction. This brake is supplied either with or without a built-in mechanical parking brake.

This brake is also built with automatic adjustment for use on special applications. On the automatic type, one actu-

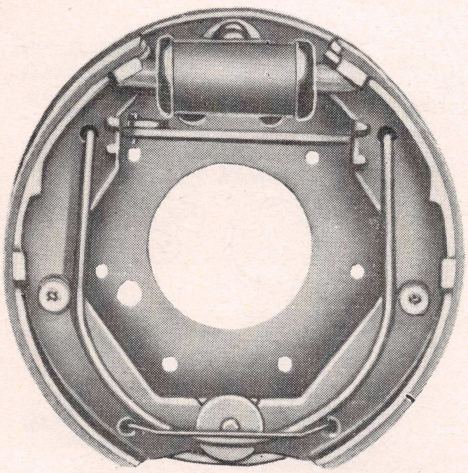

Fig. 6 Timken "FSH" series brake

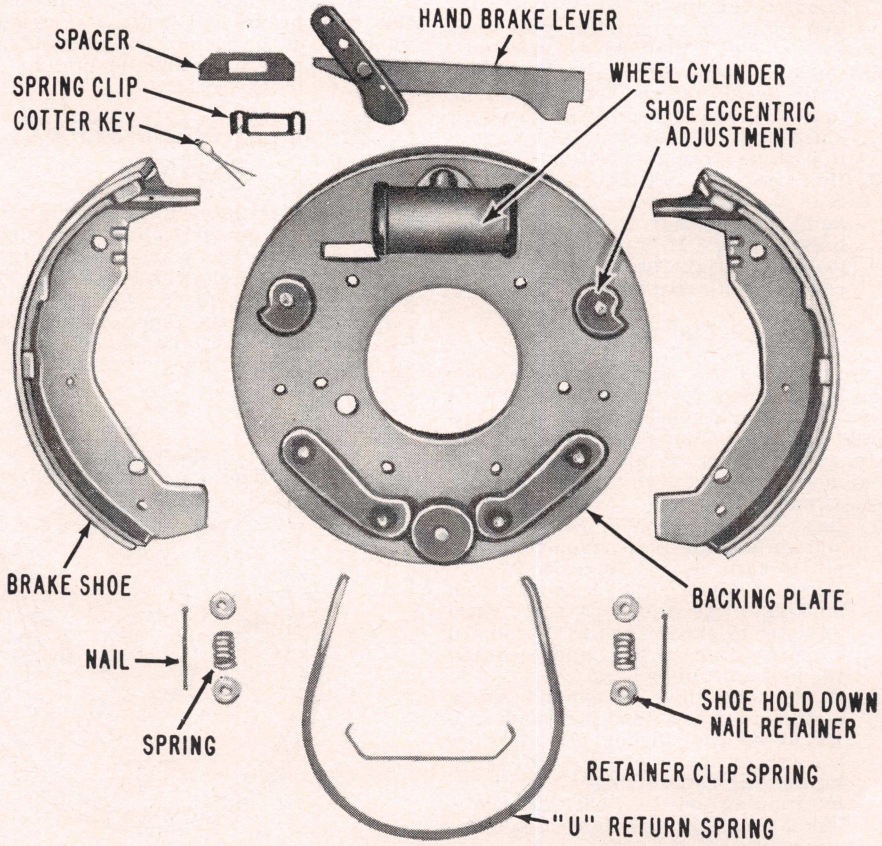

Fig. 7 Timken "FSH" series brake components. When not equipped with the parking lever feature, an upper coil spring is generally used rather than the "U" spring

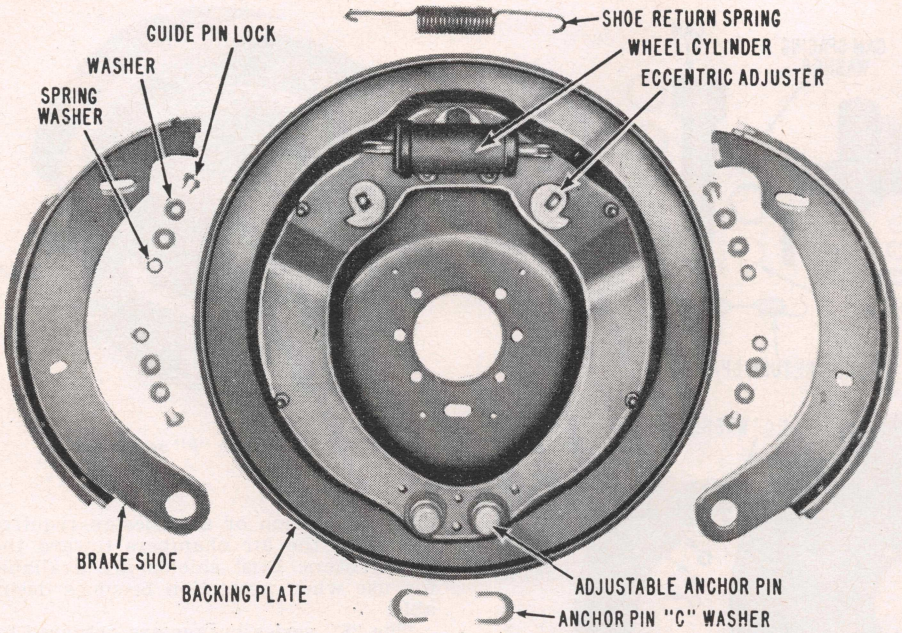

Fig. 8 Timken "H" series brake

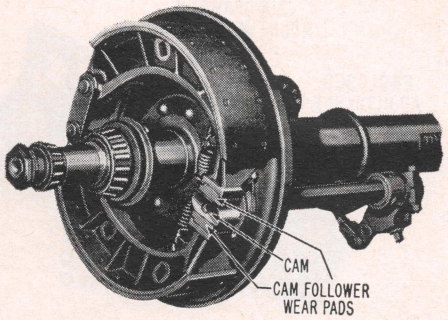

Fig. 11 Timken "T" series air actuated brake with cam follower wear pads

ation of the foot pedal sets the automatic adjustment. No further adjustment of the brake is required during the life of the brake lining. Fig. 7 shows the components that make up the assembly.

Adjustment

The adjustable type brake has two eccentric cams that may be adjusted with a wrench on the adjusting bolts at the back face of the backing plate.

Upon reassembly, first actuate the brake to center the shoes in the drum. Then adjust the liners out until a slight drag can be felt while the drum is in rotation. Back off the adjusting bolt until the drum can rotate freely.

Subsequent adjustments to compensate for lining wear may be made by moving the shoe in or out by turning the eccentric cam in the required direction.

TIMKEN "H" BRAKE

This brake, Fig. 8, is a light duty, two shoe type mounted on the backing plate which also serves as a dust shield. Adjustable anchor pins provide a means of centering the brake shoe arc in relation to the drum. Secondary or minor adjustments are made by rotating the eccentric cam which bears on the brake shoe flange or pin in the shoe web.

Adjustment

Following overhaul or when new linings are installed, the initial adjustment should be carefully made to locate properly the curvature of the lining to the drum and to obtain the proper clearance.

Each shoe must be adjusted to center the brake shoe arc in relation to the drum. Back off on both anchor pins and cams and adjust each shoe individually.

Adjust cam to bring lining into contact with drum and rotate anchor in enough to relieve drag. Repeat until additional rotation of anchor pin will no longer relieve drag, Fig. 9. Lock anchor pin lock nut and back off cam just enough to permit wheel to turn freely.

Subsequent adjustments to compensate for lining wear are made with the eccentric cam only. Turn cam to bring lining into contact with drum. Then back off just enough to permit free rolling drum. Repeat on opposite shoe.

TIMKEN "T" BRAKE

The "T" series brake, Fig. 10, is an air actuated two shoe brake, each shoe employing a one piece liner of uniform thickness. These brakes are either unit mounted with all component parts assembled on a backing plate or spider, or have inboard cam supports where operation warrants locating the air chambers toward the axle centers.

Some sizes of "T" brakes employ fabricated shoes with hardened steel cam roller followers Fig. 10, while other sizes employ either heat-treated malleable cast shoes with hardened cam follower wear pads, Fig. 11, or cam roller followers. Anchor pins of two different designs are used in various sizes of "T" series brakes. Some sizes use eccentric pins while others use fixed anchor pins.

The "T" series brakes are equipped with enclosed adjustable levers when shoe liner thickness does not exceed ⅜". The enclosed adjustable lever on these will permit the maximum liner wear. "T" series brakes with thicker liners, up to and including ½", are equipped with

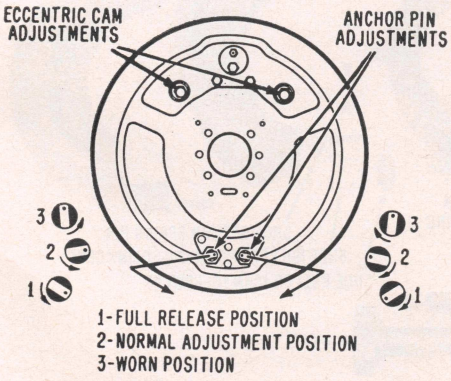

Fig. 9 Timken "H" series brake adjustments

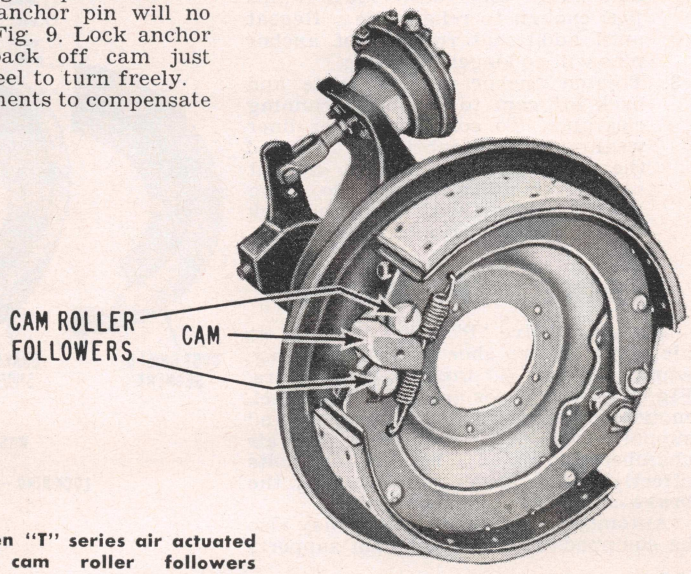

Fig. 10 Timken "T" series air actuated brake with cam roller followers

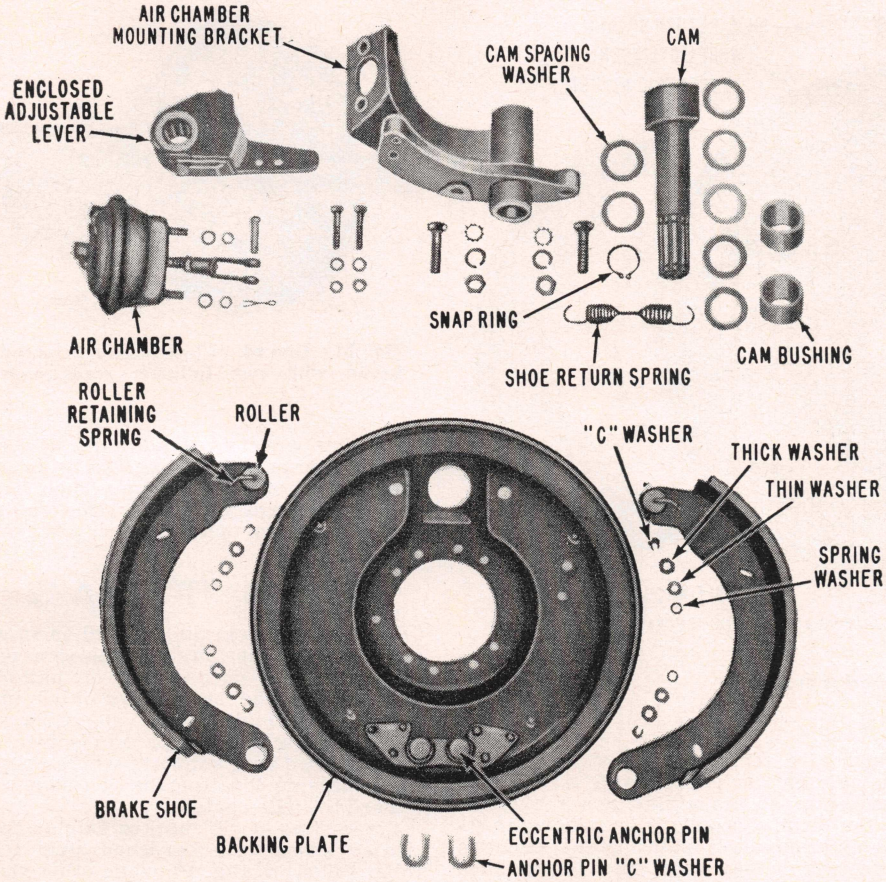

Fig. 12 Timken "T" series brake components

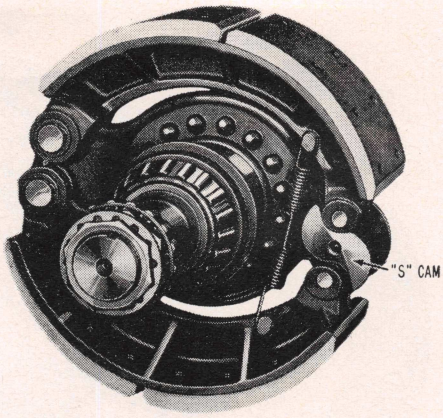

Fig. 13 Timken "P" series brake

slack adjusters. Fig. 12 illustrates the component parts of the assembly.

Adjustment

On the "T" Fabricated Steel Brake, each shoe must be adjusted to center the brake shoe arc with the drum.

1. Rotate both anchor pins to the full release position.
2. Adjust cam to bring the liners in with drum and rotate anchor pins just enough to relieve drag. Repeat until additional rotation of anchor pins will no longer free drag.
3. Tighten anchor pin lock nuts and back off cam to minimum running clearance. To compensate for liner wear on both the fabricated steel and the cast assemblies, adjust cam at cam lever adjusting bolt to bring liners in contact with drum and back off to minimum running clearance.

TIMKEN "P" BRAKE

The automotive "P" series brake is an air actuated two shoe brake, each shoe employing two ¾" tapered block liners, Fig. 13. These shoes are fabricated steel, mounted on individual anchor pins and supported by open type spiders. The air chamber mounts on a bracket that bolts directly to the spider, thus making the brake completely unit mounted.

Automotive "P" series brakes may also be equipped with inboard cam supports where operation or axle design requires mounting the air chambers toward the axle centers. Dust shields are available for use when protection becomes desirable.

The "P" series brakes are actuated by "S" type constant lift cams which are forged integrally with shaft and supported in nylon bushings. Cam pressure is applied by cam roller followers. Fig. 14 shows the brake components.

Adjustment

New liners should be circle ground to .070" less than drum diameter. Adjust cam as required to obtain 80% contact.

Adjust slack adjusters or levers to obtain ¾" travel at 60 lbs. pressure. When travel increases to 1½" due to wear, readjust to ¾".

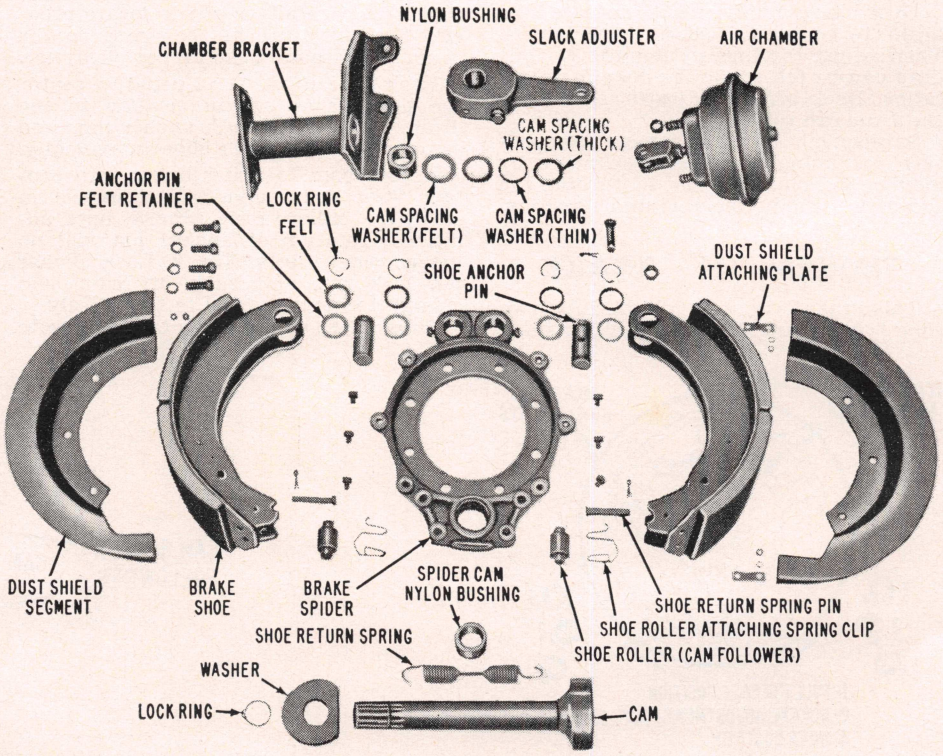

Fig. 14 Timken "P" series brake components

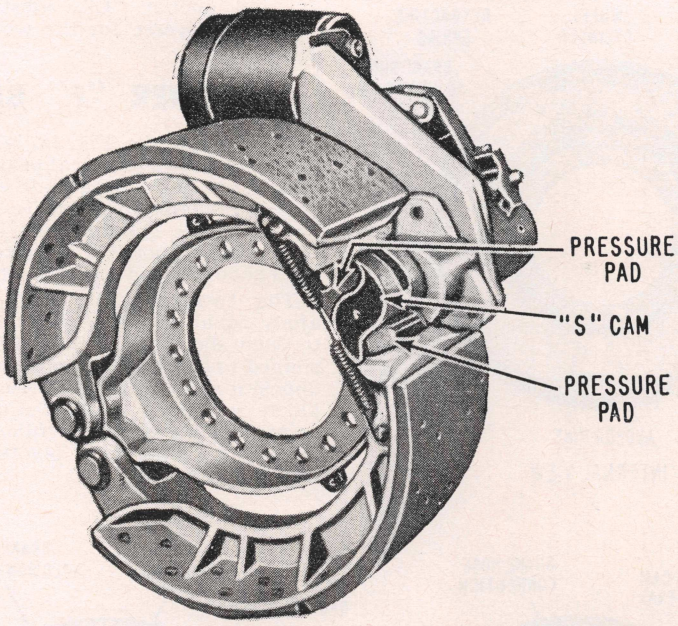

Fig. 15 Timken "P" series heavy duty brake

TIMKEN HEAVY DUTY "P" BRAKE

The Heavy Duty "P" series brake, Fig. 15, is an air actuated two shoe brake designed for heavy duty and special equipment where greater shoe and drum areas are necessary. This heavy duty series ranges from 18″ to 22″ and in width from 4″ to 7″.

The shoes are of heat treated malleable castings mounted on open spiders by individual anchor pins. Each shoe has hardened cam pressure pads and employs two ¾″ tapered block liners.

The camshaft and air chamber support bracket is mounted directly on the brake spider, making the assembly complete as a unit. However, the heavy duty brake may also be equipped with inboard cam supports where operation or axle design requires mounting the air chambers toward the axle centers.

Cam pressure is applied to the shoe hardened wear pads through the double "S" cam which is supported in needle bearings. Fig. 16 illustrates the component parts of the brake assembly.

Adjustment

New liners should be circle ground to .070″ less than the drum diameter. Adjust cam as required to obtain 80% contact.

Adjust slack adjusters or levers to obtain ¾″ travel at 60 lbs. pressure. When travel increases to 1½″ due to wear, readjust to ¾″.

WAGNER NON-SERVO BRAKE

This type brake, Fig. 17, has an adjustable anchor pin and an eccentric cam for each shoe. Note that the brake shown has a stepped type hydraulic cylinder with one end smaller than the other. However, other models have both ends of the cylinder the same diameter.

Minor Adjustment

1. With wheels raised clear of floor and hand brake in released position, rotate cam "A" outward until front shoe contacts drum and a definite drag is felt when wheel is turned by hand. Then back off adjustment until wheel is free.
2. Repeat procedure with cam "B".

Major Adjustment

1. With wheels and drums installed, rotate cam "A" until there is a brake drag felt when wheel is turned by hand.
2. Turn shoe anchor "C" in the direction of forward rotation of the wheel until a definite brake drag is felt. Note position of the anchor. Turn anchor "C" back in the opposite

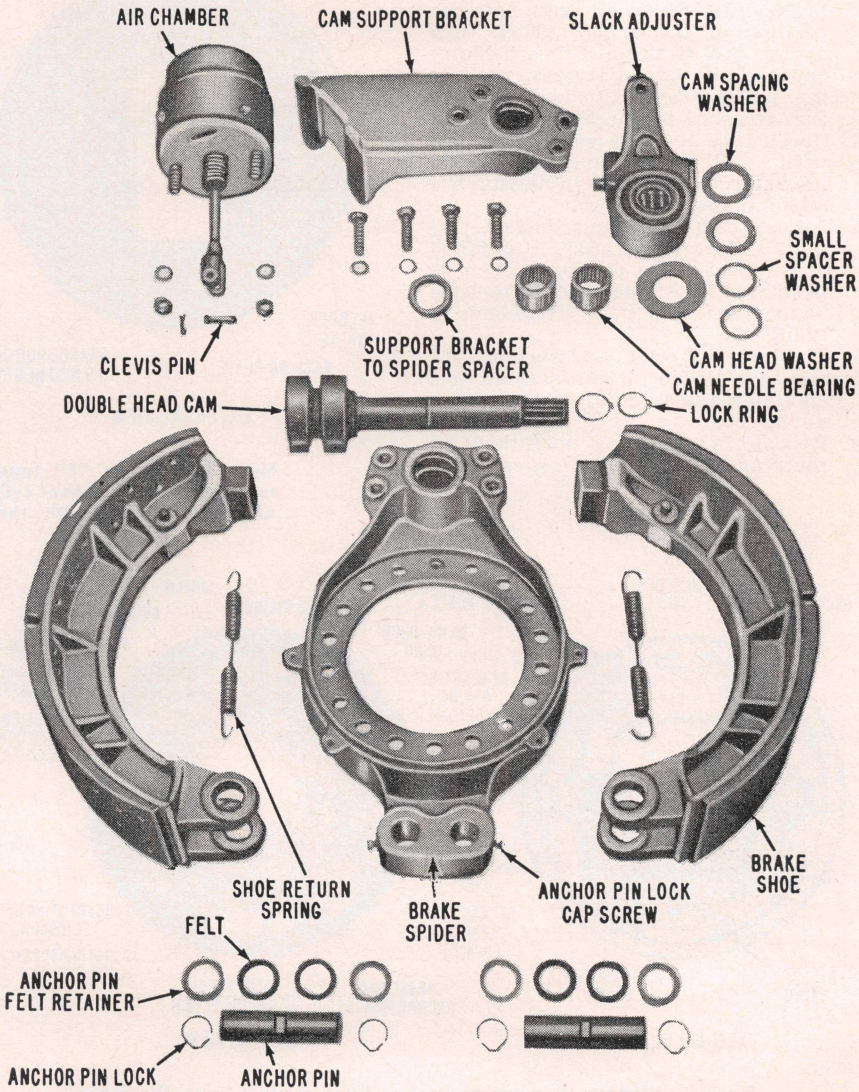

Fig. 16 Timken heavy duty "P" series brake components

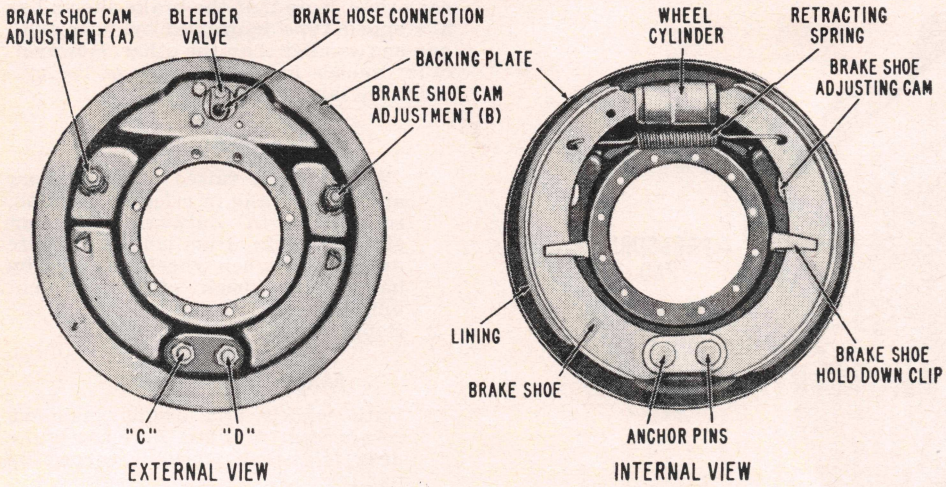

Fig. 17 Wagner brake with two adjustable anchor pins and an eccentric cam adjustment for each shoe

direction until the same amount of brake drag is felt and again note the position of the anchor. Then turn anchor "C" back until it is halfway between the two extremes, producing a free wheel. This will indicate that the shoe is roughly centralized.

3. Check both toe and heel of the shoe with a feeler gauge to determine the next steps to be taken in moving the adjustments.
4. Adjust cam "A" and anchor "C" until a clearance of .005″ is obtained at the heel and a clearance of .010″ is obtained at the toe end of the shoe as measured about 1½″ from ends of lining.
5. Tighten lock nut on anchor "C" securely. Recheck clearances at shoe ends to make sure adjustments have not altered.
6. Repeat the foregoing operations on the rear shoe by adjusting cam "B" and anchor "D", substituting the word reverse for the word forward.

WAGNER "F" BRAKE

This type brake, Fig. 18, is self-centering and has two identical brake shoes arranged on the backing plate so that their toes are diagonally opposite. Two single end hydraulic cylinders are arranged so that one cylinder is mounted between each shoe toe and the opposite shoe heel.

The two hydraulic cylinder pistons apply equal amounts of hydraulic force to each shoe toe. Each cylinder body is shaped to provide an anchor block for the opposite shoe heel. Each cylinder anchor block serves as a shoe stop centering point and provides the fulcrum around which the shoe heel pivots when the brakes are applied.

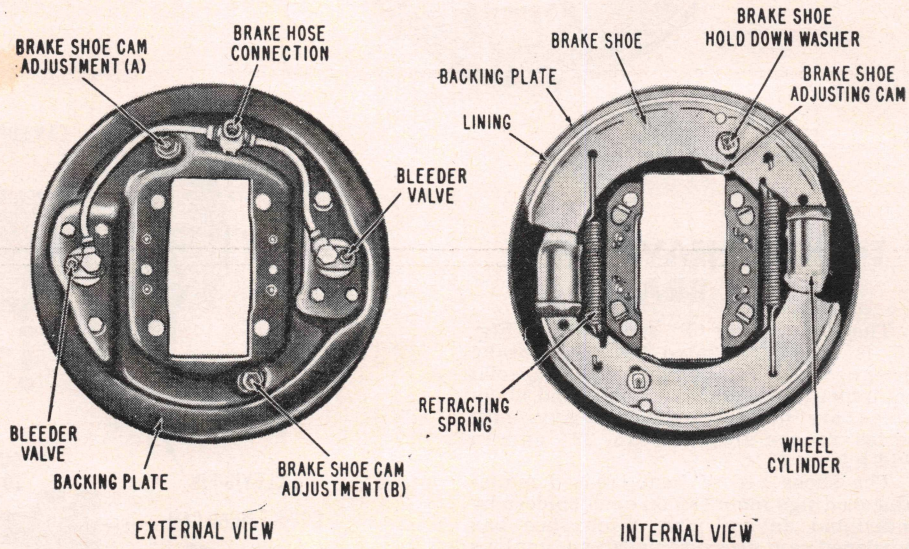

Fig. 18 Wagner "F" type brake. It should be noted that some models have the wheel cylinders mounted near the top and bottom of the assembly with the adjusting cams located at the sides

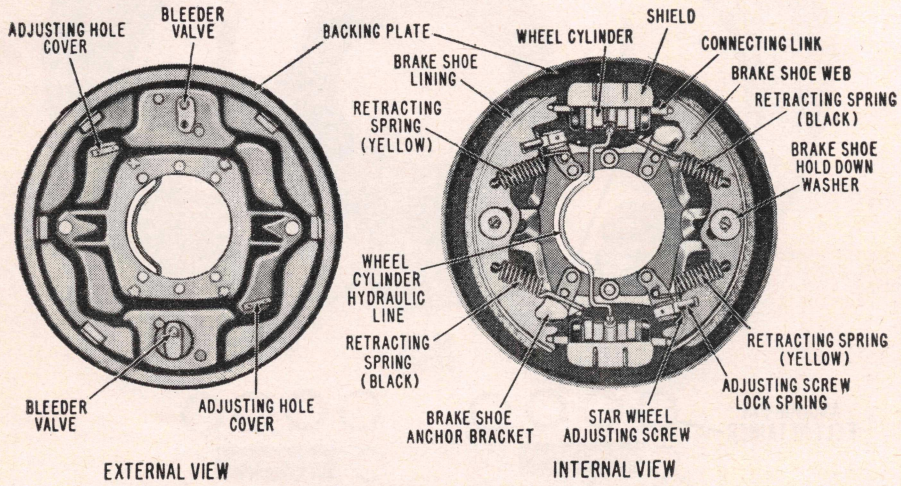

Fig. 19 Wagner twin action brake. Some models have the wheel cylinders mounted at approximately the 5 and 11 o'clock positions. Also, some have brake shoe retracting springs of unequal lengths

Adjustment

1. With wheels jacked clear of floor, place wrench on one adjusting cam stud to adjust one shoe. Rotate wrench in the direction of forward wheel rotation until lining drags on drum.
2. Move wrench slightly in opposite direction until wheel is free to turn; then move wrench an additional 7 to 10 degrees to provide running clearance (7 to 10 degrees is equal to 1″ to 1½″ of travel at end of an 8-inch wrench).
3. Place wrench on opposite adjusting cam stud and adjust second shoe in the same manner.

WAGNER TWIN ACTION BRAKE

This type brake, Fig. 19, is equipped with two double end hydraulic cylinders

which apply hydraulic pressure to both the toe and heel of two identical, self-centering shoes. The shoes anchor at either toe or heel, depending upon the direction of drum rotation. Brake anchor supports and backing plates are riveted to the axle housing flange. The supports have slotted anchor pins at the shoe heels, and adjusting screws at the shoe toes. The adjusting screws act as anchors in the reverse direction of rotation. Each adjusting screw is threaded into or out of its support by means of an adjusting wheel. The adjusting wheels are accessible through slots in the backing plate.

Adjustment

1. With wheels raised clear of floor, remove adjusting hole covers from backing plate.
2. Use a screwdriver or special adjusting tool through opening in backing plate and turn rear adjusting screw until a light drag is felt as wheel is turned. Then back off until drum turns freely.
3. Repeat adjustment at front adjusting screw. Install adjusting hole covers.

AIR BRAKES

CONTENTS

Air Brake Equipment 259
Operation Tests 267
Leak Tests 267
Trouble Diagnosis 267

AIR BRAKE EQUIPMENT

Air brake equipment on trucks and truck tractors provides a means of controlling the brakes through the medium of compressed air. The equipment consists of a group of devices as shown in Fig. 1. Some of these devices maintain a supply of compressed air, some direct and control the flow of compressed air, and others transfer the energy of compressed air into the mechanical force and motion necessary to apply the brakes.

Different sizes and types of devices are in use on different types of vehicles to meet operating requirements. Following are the devices comprising a typical air brake system with a brief description of the function of each device.

Air Compressor

The compressor supplies the compressed air to operate the brakes. Two types are in general use, the piston type and the rotary type. Both types run continuously while the engine is operating.

In the piston type, Figs. 2 and 3, the actual compression of air is controlled by the governor which, acting in conjunction with the unloading mechanism in the compressor cylinder block, starts and stops the compression of air by loading or unloading the compressor when the pressure in the air brake system reaches the desired minimum of 80-85 psi or maximum of 100-105 psi.

In the rotary type, Figs. 4 and 5, the actual compression of air is regulated by the control valve (governor) which starts or stops air compression by "loading" or "unloading" the compressor as required. This action establishes an intermittent pumping cycle which keeps reservoir tank pressure within the desired range.

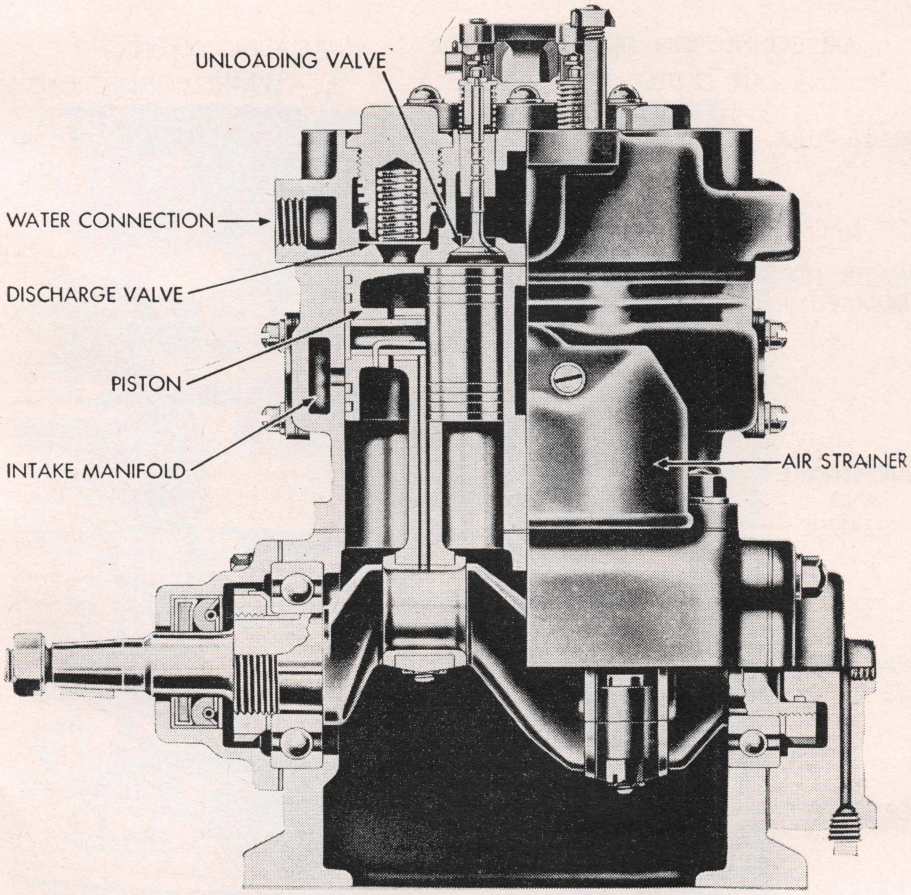

Fig. 2 Piston type air compressor

Governor

With piston type compressors two types of governors are in general use, the diaphragm type and the bourdon tube type.

The diaphragm type, Fig. 6, acting in conjunction with the compressor unloading mechanism, automatically limits system pressure to a predetermined range by opening unloading valves and stopping compression when system pressure has been built up to a maximum of 100-105 lbs, and by closing unloading valves and starting compression when system pressure has dropped to a minimum of 80-85 lbs. The governor consists essentially of a diaphragm upon which air pressure acts, a spring to control the movement of the diaphragm, and a valve mechanism controlled by the position of the diaphragm which admits air to, or exhausts air from, the unloading mechanism in the compressor cylinder heads.

The design of the type governor shown in Fig. 7 is based on the principle of the bourdon tube. This is a flattened metal tube bent to a curve that tends to straighten under internal pressure. This reaction by the tube, due to changes of air pressure in the tube, increases or decreases the spring load on the valve mechanism of the governor and makes the valve mechanism assume its "cut-in" or "cut-out" positions in accordance with the air pressure in the reservoir tank.

The control valve (governor) for rotary type compressors regulates the pumping action of the compressor to

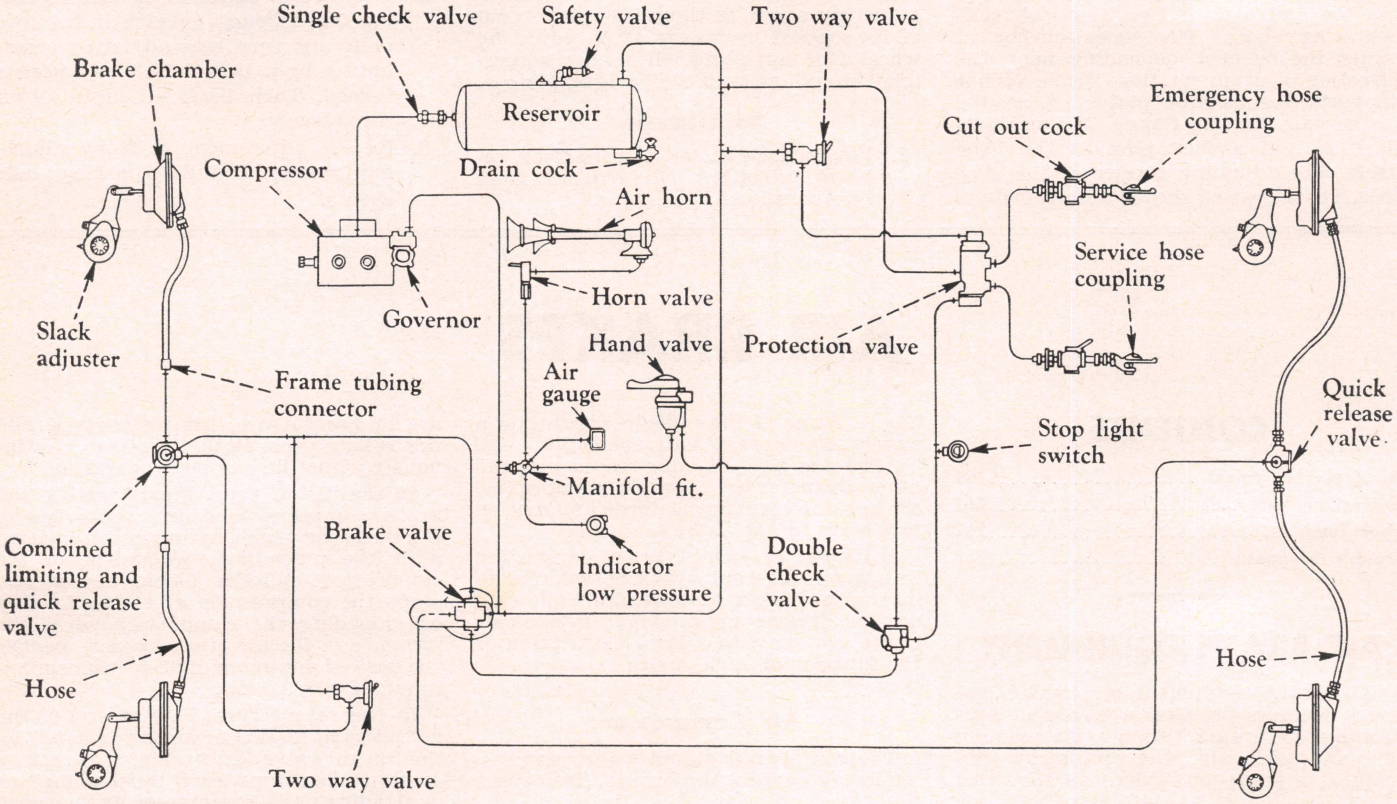

Fig. 1 Typical air brake system circuit diagram

maintain the correct pressure range in the reservoir tank.

Brake Application

The brake application valve controls the air pressure being delivered to the brake chambers and in this way controls the operation of the brakes.

Fig. 8 illustrates the integral treadle type while Fig. 9 shows the lever type which is fastened to a brake pedal or treadle.

The hand control valve, Fig. 10, is used for controlling the brakes on a trailer independently of the brakes on the towing truck. The valve is usually mounted on the steering column or on the dash and the driver may put the handle in any one of several positions between "brakes released" and "brakes applied" position so the brakes on the trailer are kept applied until the brake valve handle is returned to release position.

Relay Valve

The relay valve, Fig. 11, speeds up the application and release of air pressure from the rear wheel brake chambers. It is controlled by the brake application valve and keeps the air pressure in the rear wheel brake chambers the same as the pressure being delivered by the brake application valve. It reacts to even slight changes in pressure and raises, lowers, or completely exhausts the air pressure in

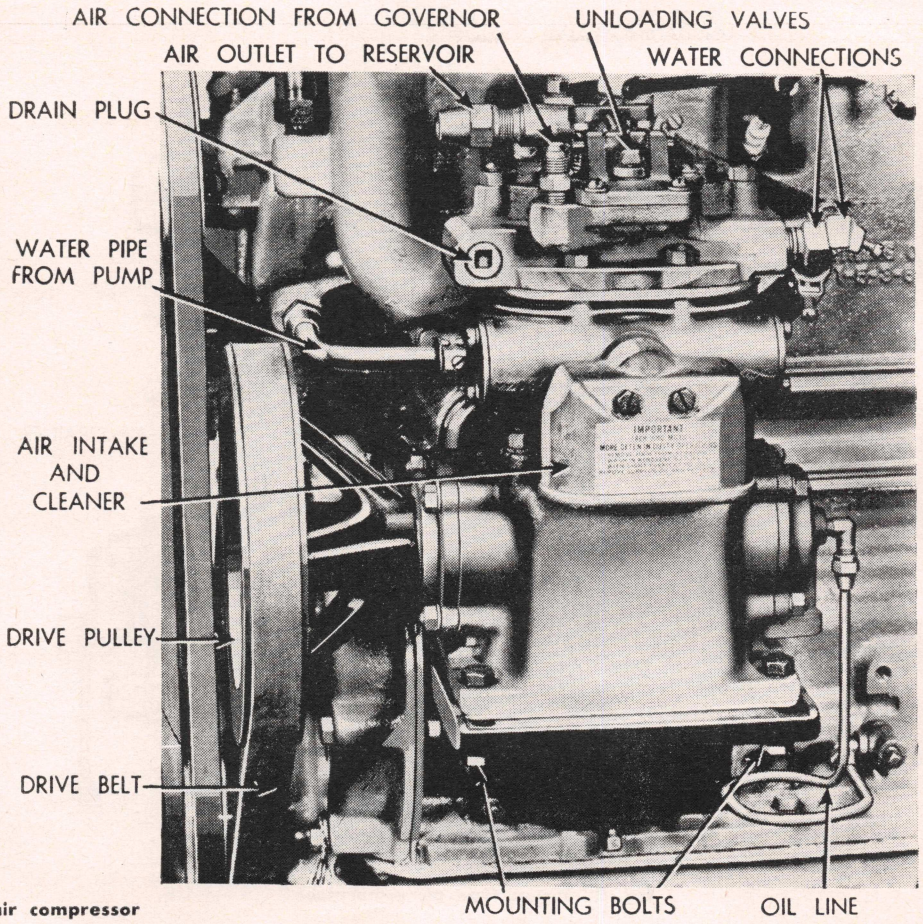

Fig. 3 Side-mounted piston type air compressor

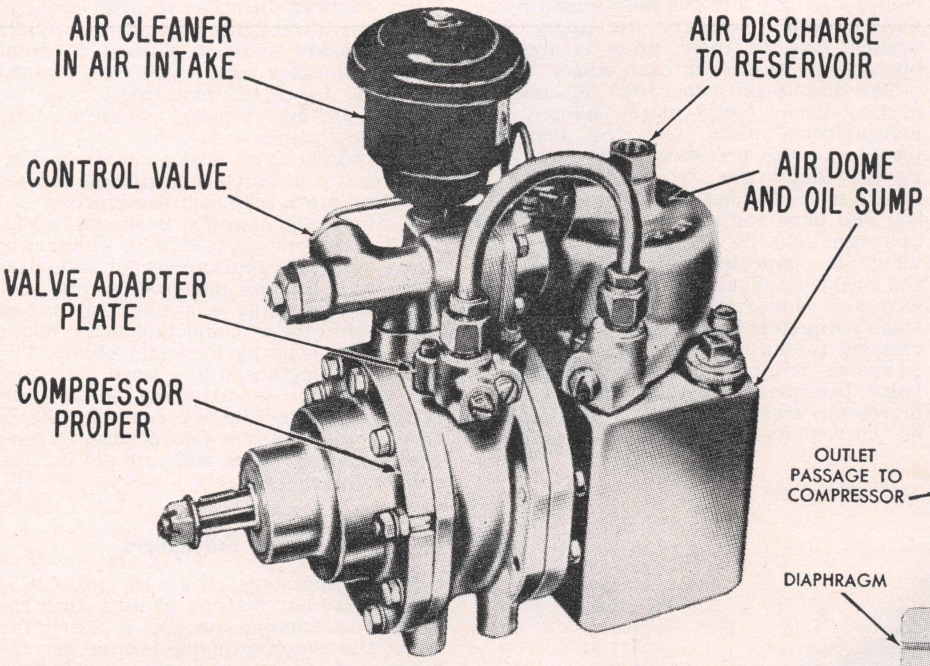

Fig. 4 Rotary type air compressor

the rear brake chambers as the brake application valve raises, lowers, or completely exhausts air pressure from it.

Rear Brake Balancing Valve

Used on late model GMC trucks, this valve is used to vary the degree of rear brake application as load on rear axle varies, Fig. 11A. A light load, for example, requires lighter brake pressure to avoid locking wheels and losing traction.

The balancing valve is located near the frame rear crossmember. It is installed in the air line between the brake application valve and the rear brake relay valve.

The balancing valve assumes three positions during normal operation. In the applying position, the air pressure is passing through the valve into the rear brake relay valve. In the holding position, the air pressure is held in the relay valve and in the rear brake chambers. In the releasing position, the control air is exhausted through the application valve and the brake chamber air is exhausted through the relay valve. Air pressure beneath the diaphragm changes only as the height control valve meters air into or out of the bellows.

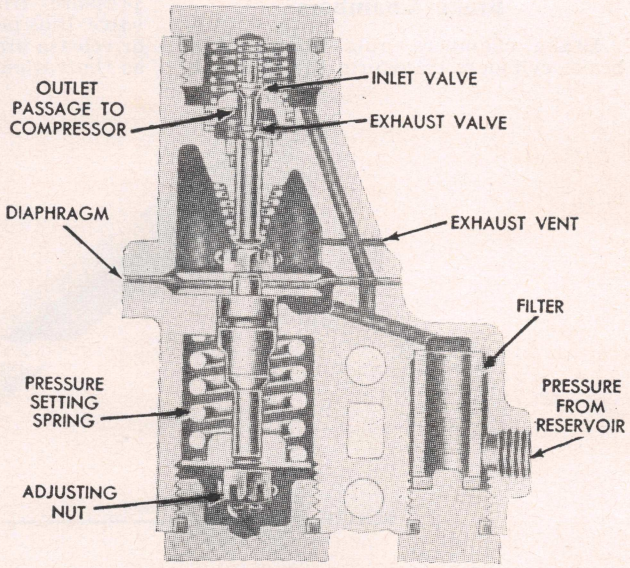

Fig. 6 Diaphragm type governor used with piston type air compressor

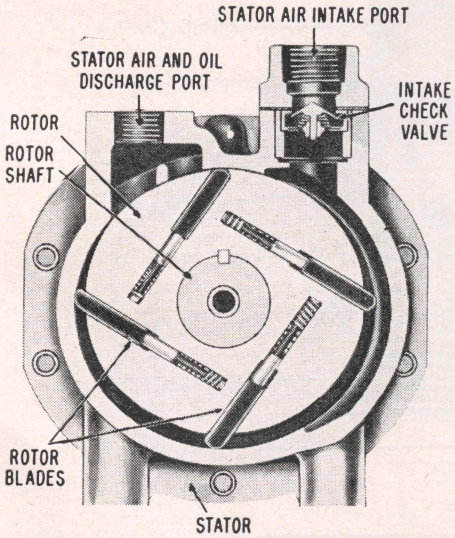

Fig. 5 Rotor and stator of rotary type air compressor

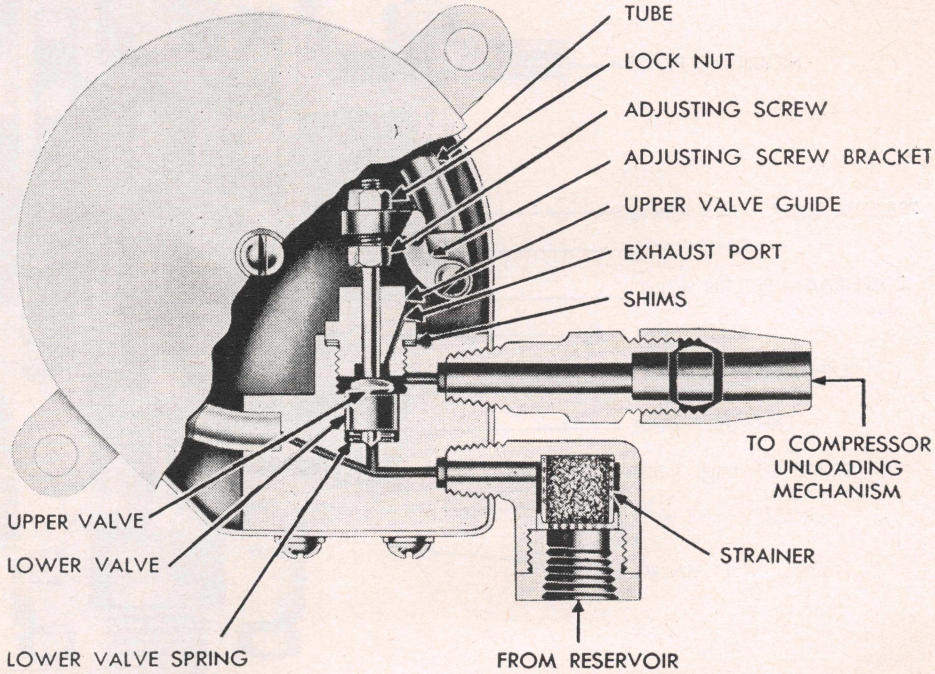

Fig. 7 Bourdon tube type governor used with piston type air compressor

Quick Release Valve

The purpose of the quick release valve, Fig. 12, is to reduce the time required to release the brakes by hastening the exhaust of air pressure from the brake chambers. It is commonly used with front wheel brake chambers.

The valve consists of a body containing a spring-loaded diaphragm so arranged as to permit air pressure to flow through the valve in one direction. But when the supply pressure is reduced, the air which has passed through the valve is permitted to escape through the exhaust port.

Brake Chambers

Brake chambers, roto chambers or brake cylinders transform the energy of compressed air into the mechanical force and motion necessary to apply the brakes. One of these units is used to operate the brakes on each wheel.

The diaphragm type, Fig. 13, consists of two dished metal plates, namely the non-pressure plate and the pressure plate, and the pressure plate separated by the diaphragm. In front of the diaphragm are the non-pressure plate, push rod and push rod spring. Behind the diaphragm is the air-tight cavity into which is connected a tubing line from the brake application valve. Due to the extreme sensitivity of the diaphragm, this arrangement permits the push rod to respond to the slightest variation of air pressure from the brake application valve, thus permitting the driver to apply or release brakes as rapidly or gradually as the various road and operating conditions warrant. In order to meet requirements for different braking forces, brake chambers are made in several different sizes. All sizes are made for several different types of mountings, such as stud mounting, bracket mounting and flange mounting.

The piston type brake chamber, Fig. 14, operates in much the same manner as the diaphragm type just described.

A roto brake chamber is shown in Fig. 15. The major parts are a cylindrical body, tubular diaphragm, inner and outer diaphragm clamps, push rod, spring, cover, mounting studs and yoke. One end of the diaphragm is connected to the inside wall of the body by the outer clamp. The push rod is attached to a push plate and the assembly is attached to the diaphragm guide. The cover is attached to the outer body and a yoke is screwed onto the end of the push rod, completing the roto chamber assembly.

Slack Adjusters

Slack adjusters, Fig. 16, provide a quick and easy method of adjusting the brakes to compensate for brake lining wear. One slack adjuster is used for the brakes on each wheel. Slack adjusters consist of a worm and gear enclosed in a body which serves as an adjustable lever. During brake application, the entire slack adjuster rotates bodily with the brake camshaft. During brake adjustment, the worm moves the gear so as to change the

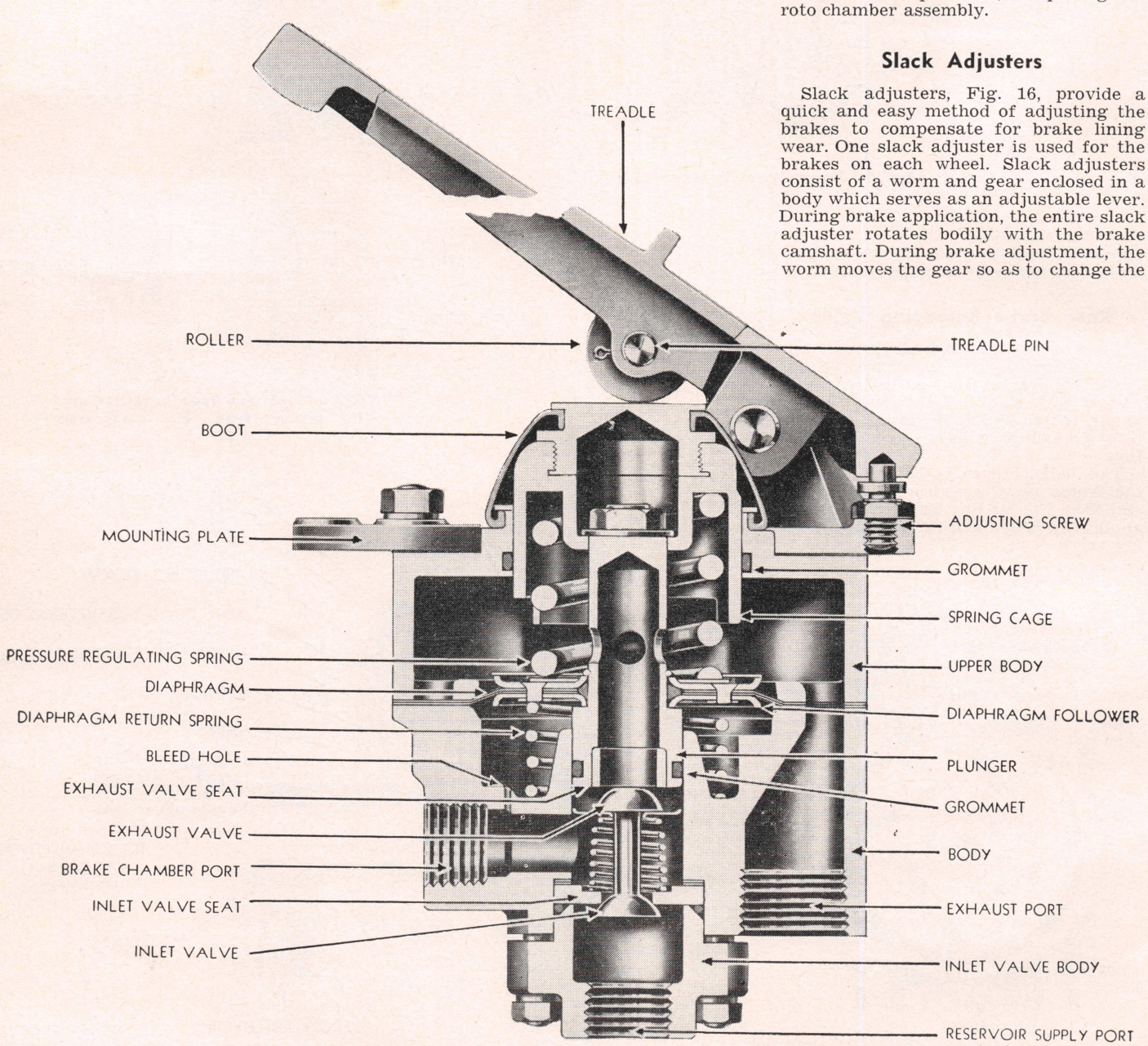

Fig. 8 Brake application valve with integral treadle

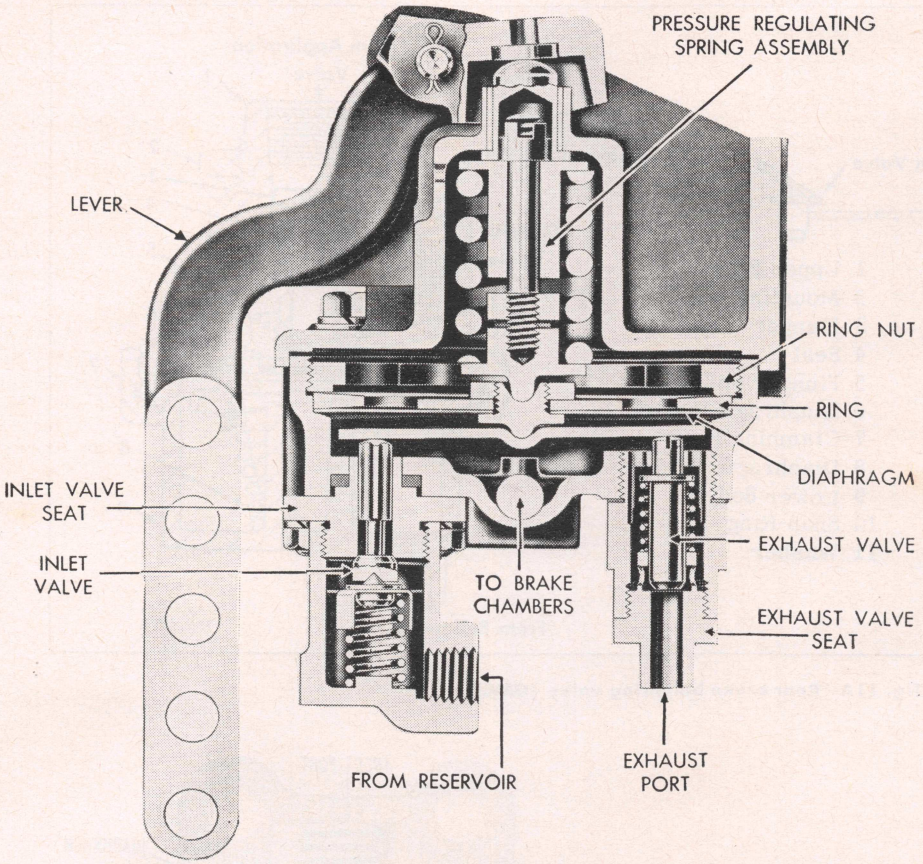

Fig. 9 Lever type brake application valve which fastens to a brake pedal or treadle

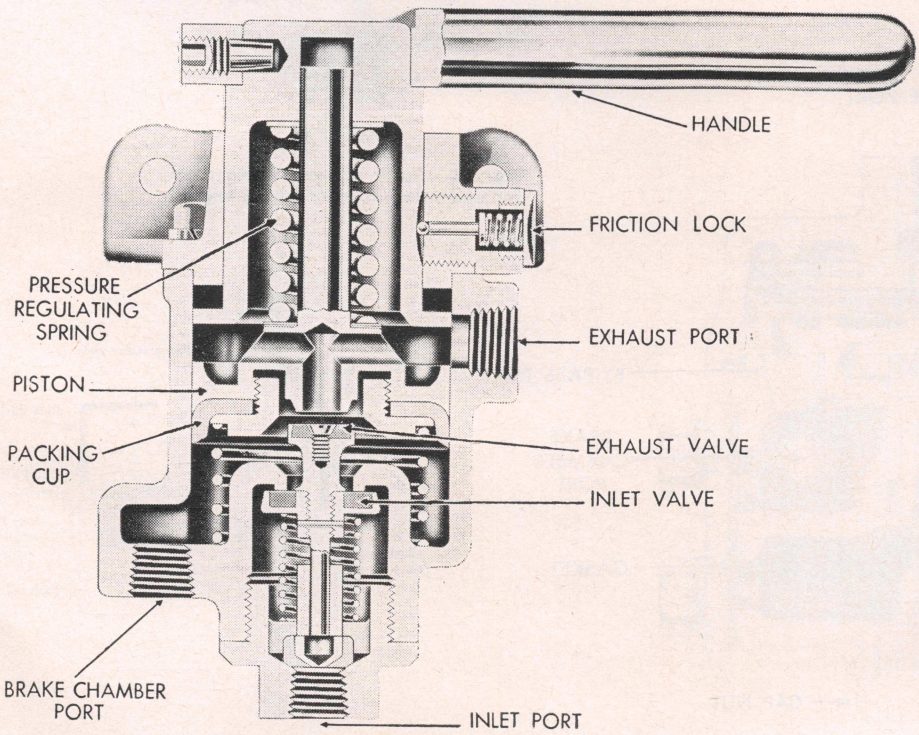

Fig. 10 Hand operated brake application valve for trailer brakes

position of the lever arm in relation to the brake camshaft.

Fig. 17 illustrates the locking sleeve in its disengaged position. Be sure this is *held in,* disengaging the adjusting screw, when making adjustments. *Never use a wrench on the sleeve portion.*

When slack adjuster movement does not give the desired brake action, adjustment of the push rod length by altering the location of the yoke may be necessary. With brakes released the angle formed by the push rod and slack adjuster must be greater than 90 deg., and all slack adjusters must be set at the same angle. With the brakes fully applied, after being adjusted, this angle should still be greater than 90 deg., Fig. 18.

Cut-Out Cocks

Cut-out cocks are used in the service and emergency lines of the tractor-truck to provide a means of closing off these lines when they are not being used.

Always open and close a cut-out cock by hand. Never strike the handle with a hammer or similar instrument as the cock will be damaged and leakage will develop.

Air Reservoirs

The purpose of the reservoirs is to provide a place to store compressed air so that there will be an ample supply available for immediate use in brake operation. They also provide storage for sufficient compressed air to permit several brake applications after the engine has stopped. Another function of a reservoir is to provide a place where the air, heated during compression, may cool and cause the oil and water vapors to condense.

Drain Cocks

Drain cocks are installed in the bottom of each reservoir, Fig. 19, in the air brake system to provide a convenient means of draining the condensation which normally collects in the reservoirs.

Always open a drain cock by hand. Never strike the handle with a hammer or similar instrument as the cock will be damaged and develop a leak.

Safety Valve

The purpose of the safety valve, Fig. 20, is to protect the air brake system against excessive air pressure. Should the air pressure in system rise above the setting of the safety valve at 150 lbs., the valve opens and permits the excess pressure to be exhausted. The valve consists of a spring-loaded ball check valve which is set to "blow off" at 150 lbs. air pressure.

Low Pressure Indicator

The low pressure indicator, Fig. 21, is a safety device designed to give an automatic warning whenever the air pressure in the system is below approximately 60 lbs. Operating as an air-controlled switch of an electrical circuit, the low pressure indicator automatically sounds a buzzer when the air pressure drops too low. On

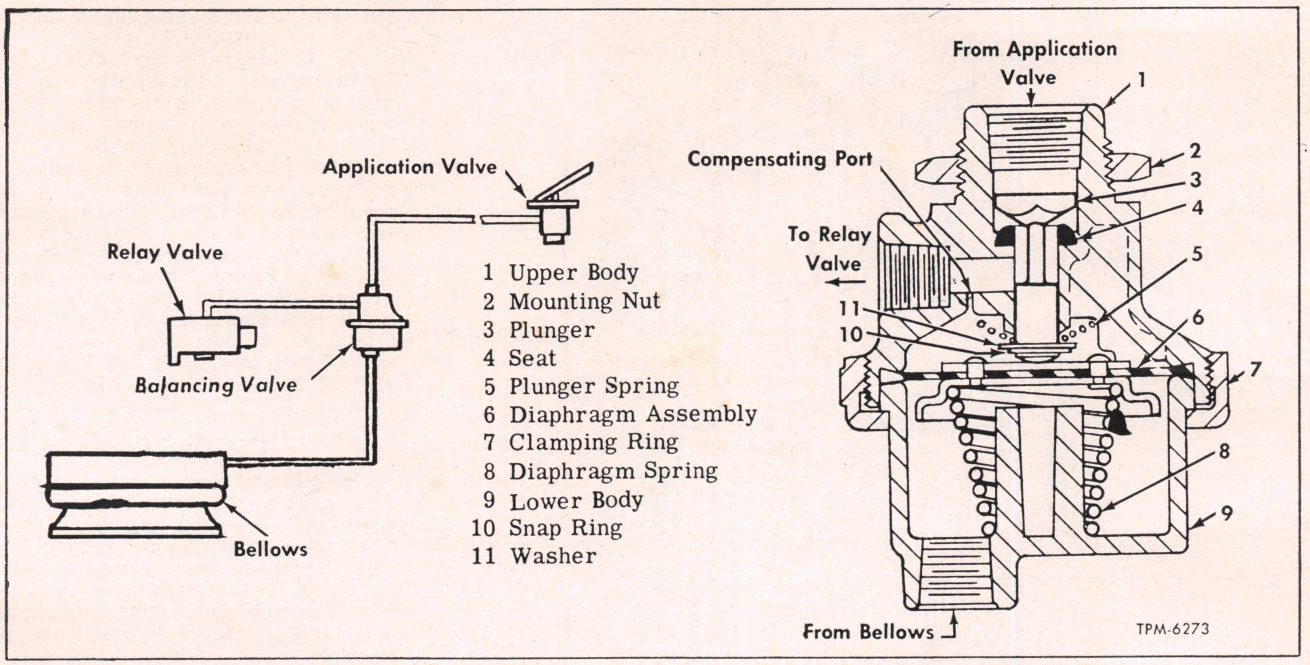

Fig. 11A Rear brake balancing valve (GMC)

some vehicles a light is used to indicate low pressure in place of the buzzer.

Double Check Valve

Double check valves are used in an air brake system where it is necessary to automatically direct the flow of air pressure into a common line from either of two lines.

There are two types of double check valves, the shuttle type shown in Fig. 22, and the disc type.

The shuttle type consists of a die cast body and two end caps. Inside the valve

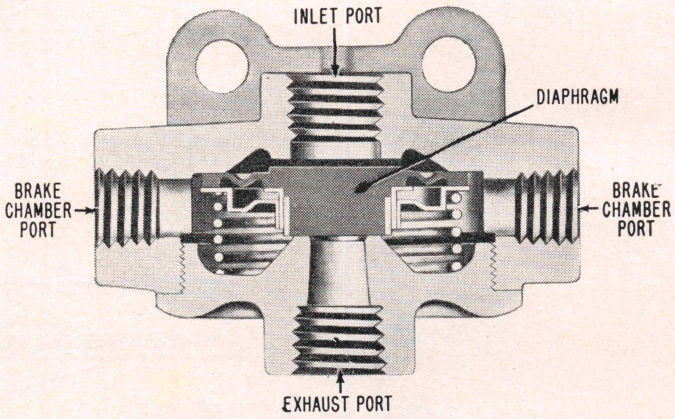

Fig. 12 Quick release valve used for operation of front wheel brakes

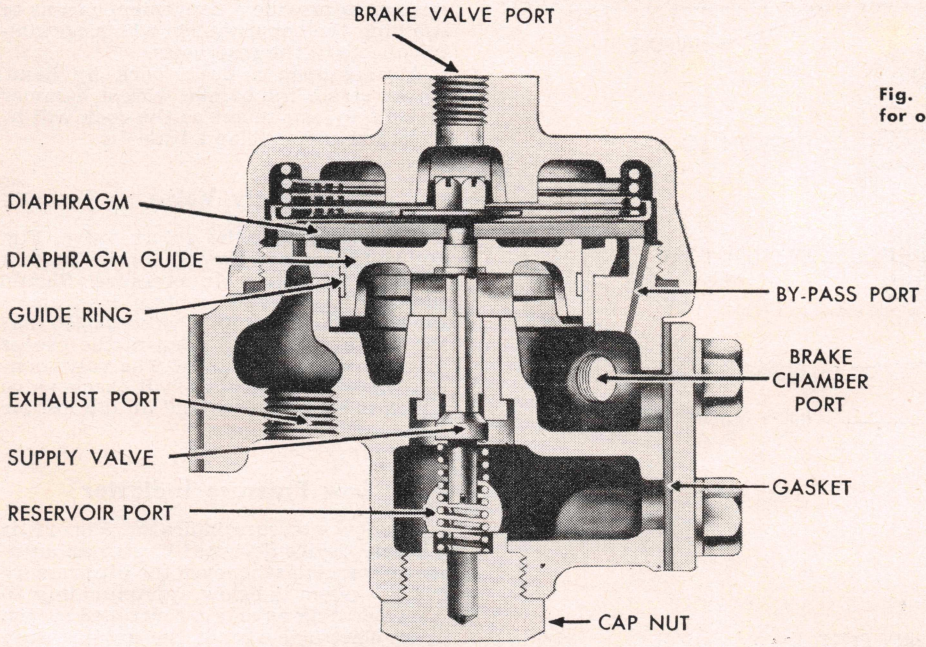

Fig. 11 Relay valve for rear wheel brake operation

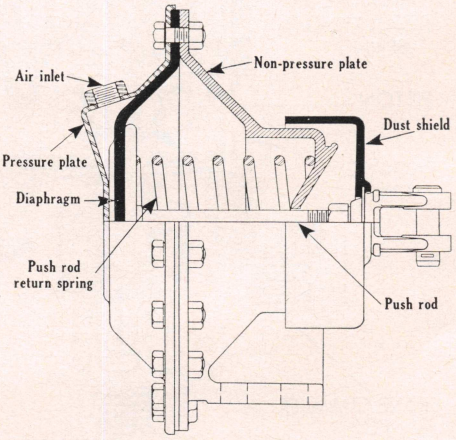

Fig. 13 Diaphragm type brake chamber

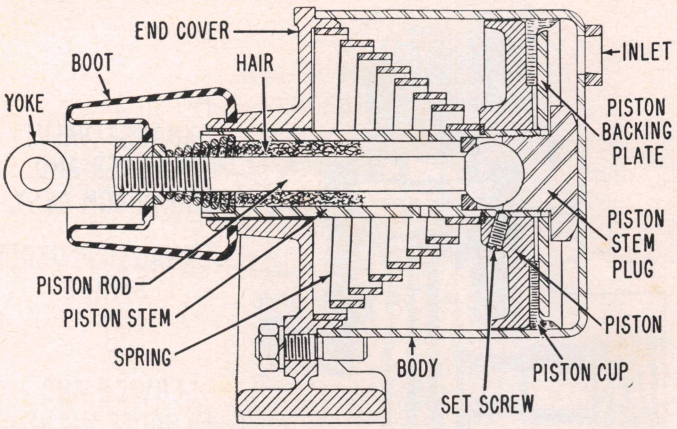

Fig. 14 Piston type brake chamber

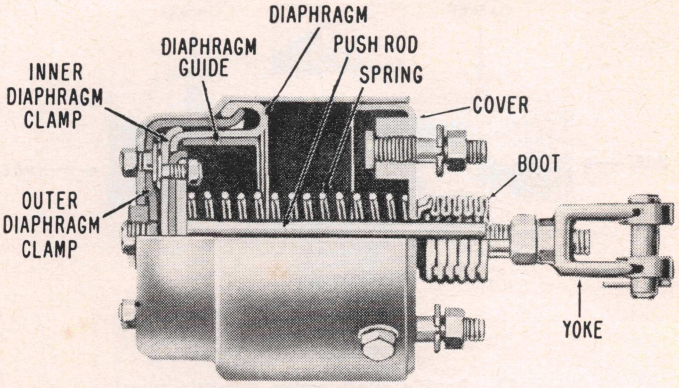

Fig. 15 Roto brake chamber

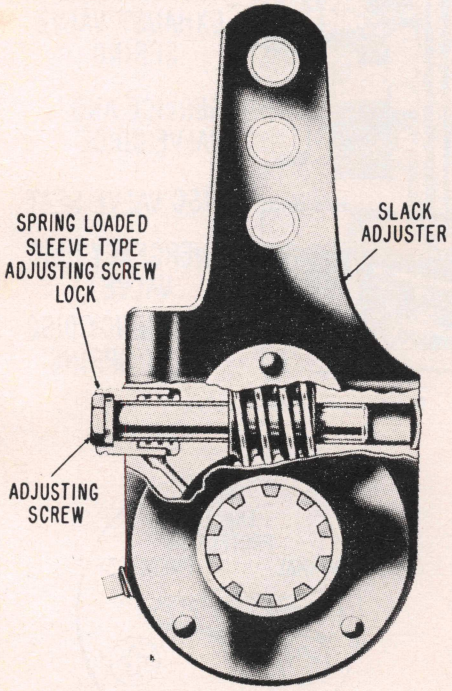

Fig. 16 Slack adjuster

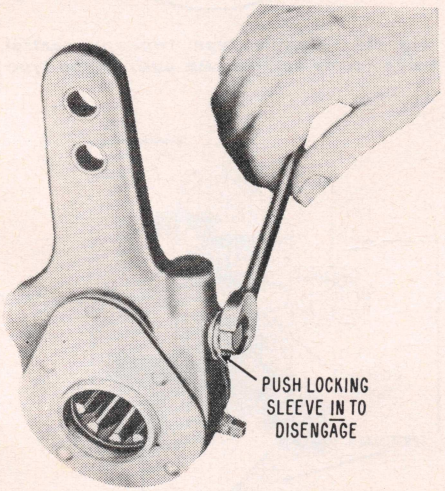

Fig. 17 Locking sleeve on adjusting nut of slack adjuster

are two rubber seal gaskets and a brass metal shuttle.

The disc type consists of a cast body and one end cap. Inside the valve is a rubber disc and a disc guide. One end of the end cap serves as a disc seat, the other end is tapped for air line connections.

Fundamentally, the only difference in the design of the two valves is that the shuttle type has a movable metal shuttle which contacts rubber seats to seal off the line not being used, whereas the disc type has a movable rubber disc which contacts metal seats.

Single Check Valve

The single check valve is a small device placed in an air line when it is important to allow air passage in one direction only and prevent passage in the reverse direction.

The check valve contains a spring-loaded disc which normally seats against the air inlet in one end of an inner chamber. Air flow in the normal direction moves the check valve from its seat and the flow is unobstructed. Flow in the reverse direction is prevented by the seating of the disc, which is caused by the action of the spring and assisted by the air pressure.

Tractor Protection and Two Way Valves

The purpose of the tractor protection valve, Fig. 23, is to provide extra brake protection for towing vehicles. It provides for complete braking control of the truck or tractor by permitting closure of service and emergency lines leading to the trailer hose lines in the event of a trailer breakaway or other malfunction in the tractor or trailer air brake system.

The manually controlled type consists of a two-way control valve, Fig. 24, and the tractor protection valve.

For all normal operating conditions the two-way control valve handle is placed in the normal position which permits reservoir pressure to enter the tractor protection valve and act on the diaphragm and plunger assembly. During initial charging, the emergency valve and service disc valve in the tractor protection valve remain closed until 30-40 lbs. air pressure is reached in the tractor reservoir and up to that pressure no air is supplied to the trailer through the trailer emergency line.

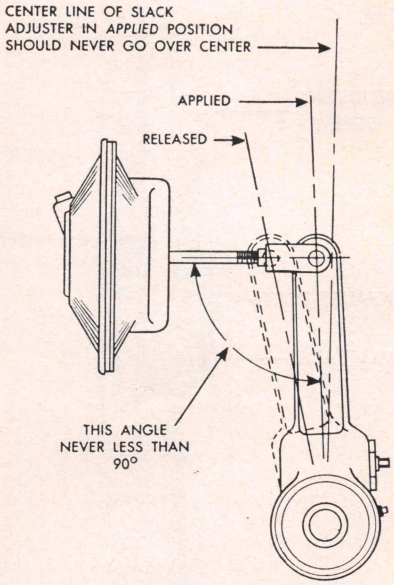

Fig. 18 Showing correct travel of slack adjuster when properly adjusted

When 30-40 lbs. air pressure is reached in the tractor reservoir, the emergency valve and service disc valve in the tractor protection valve open and remain open, allowing air pressure to be de-

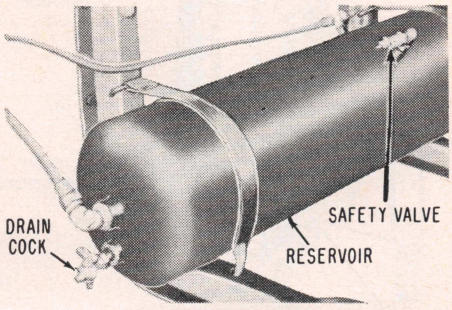

Fig. 19 Reservoir, drain cock and safety valve

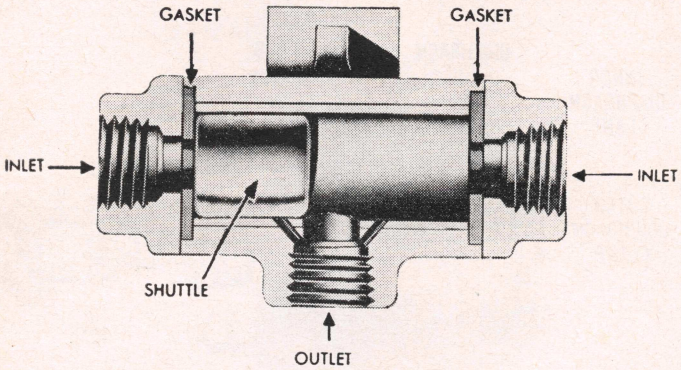

Fig. 22 Double check valve (shuttle type)

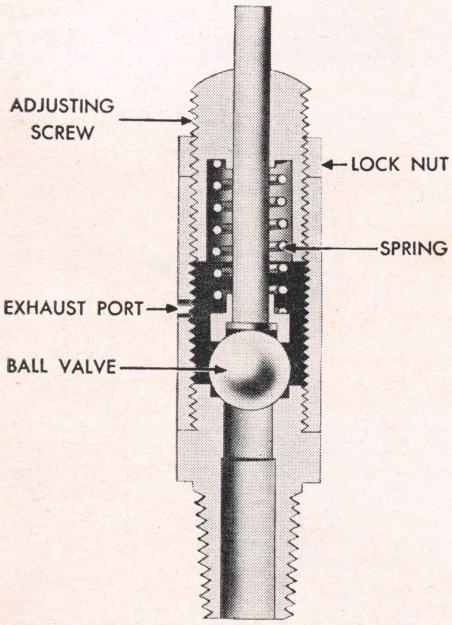

Fig. 20 Safety valve

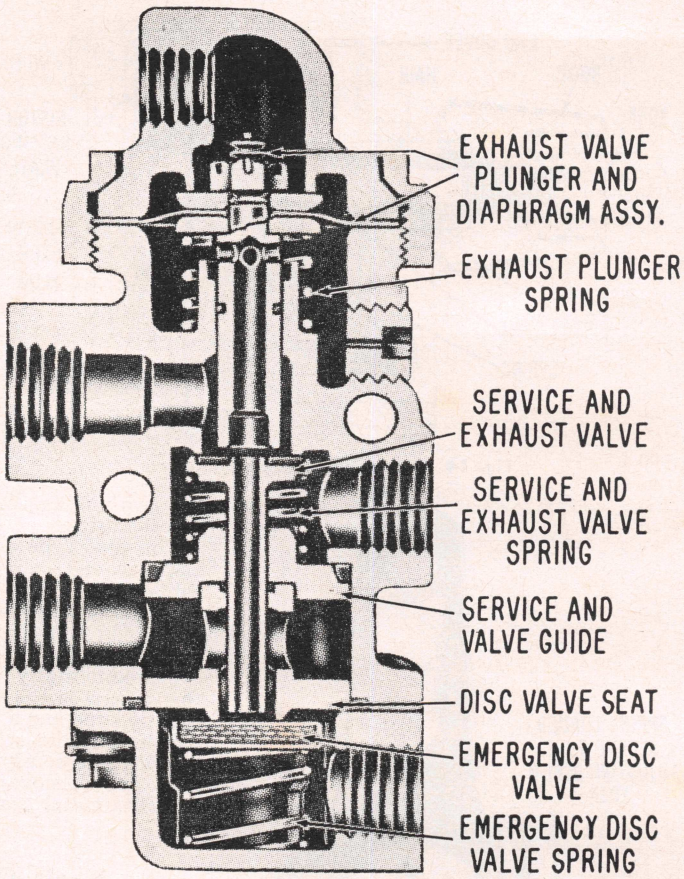

Fig. 23 Tractor protection valve

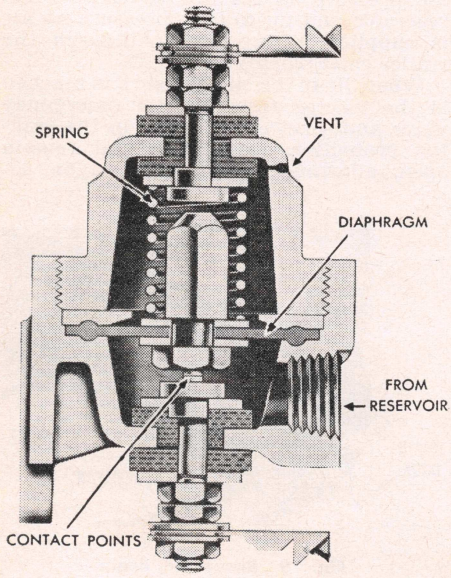

Fig. 21 Low pressure indicator

livered through the emergency line charging the trailer reservoir. All normal braking and emergency functions for both truck-tractor and trailer are retained as long as the tractor reservoir pressure is above 30-40 lbs.

Air Supply Valve

In some cases the air supply valve is included to provide an easy means of obtaining compressed air from the air brake system for such purposes as tire inflation.

Air Pressure Gauge

The purpose of the dash-mounted air pressure gauge is to register the amount of air pressure in the system. While air pressure gauges of this type are commercially accurate, they must never be confused with or substituted for test gauges which are intended primarily for accurately checking air pressure in the air brake system.

Test gauges differ from ordinary dash gauges in respect to material and workmanship just as an expensive watch differs from a cheaper one. Due to these differences they are more accurate over the entire range and maintain their accuracy over longer periods.

Stop Light Switch

The stop light switch, Fig. 25, is mounted on or near the brake application valve. Stop light switches are electro-

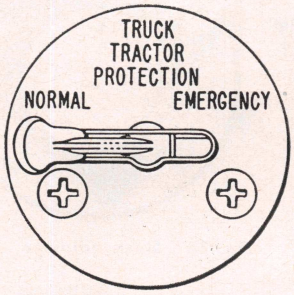

Fig. 24 Toggle type two-way control valve (some vehicles use push button type)

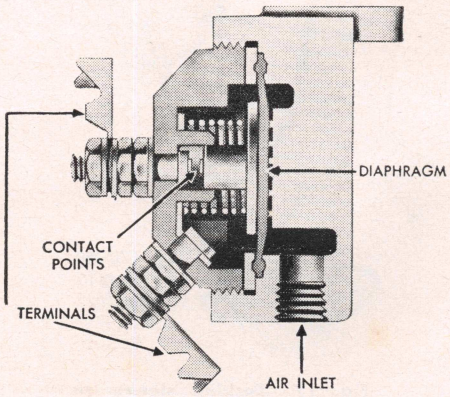

Fig. 25 Stop light switch

pneumatic switches which close the stop light electrical circuit when the brakes are applied.

Alcohol Evaporator

On some vehicles an alcohol evaporator is included to prevent moisture freezing in the air brake system.

OPERATION TESTS

If the air brake system is not operating properly the following tests will help in locating the source of trouble.

Drain Reservoirs

With the air brake system charged, open the drain cocks in each reservoir. Close the drain cocks after all moisture is drained from reservoirs.

Check Stoplight Switch

With all air pressure exhausted from the air brake system, start the engine and move the brake valve to the applied position. Stop lights should light before the dash gauge registers 10 psi pressure. Release the brakes.

Low Pressure Indicator

Exhaust the brake system pressure and observe the pressure at which the warning buzzer sounds. The contacts in the indicator should close the circuit to the buzzer when reservoir pressure is between 54 psi minimum and 66 psi maximum. If the buzzer does not start to sound within this pressure range during discharge, or if the sounding buzzer does not stop within this pressure range during the pressure build-up, the electrical connections are loose or the indicator valve is defective.

Governor

With the engine running, build up air pressure in the system and observe at what pressure reading on the dash gauge the pressure stops climbing. This is the point of governor cutout, which should be between 100 and 105 pounds.

With the engine still running, slowly reduce the air pressure in the system by applying and releasing the brakes. Observe the pressure reading on the dash gauge at the point where the pressure starts to build up again. This is the point of governor cut-in which should be between 80 and 85 pounds.

If the governor does not cut the compressor in and out according to these specifications, adjust the governor pressure settings. Before adjusting the governor, check the accuracy of the dash gauge with a test gauge.

Quick Release Valve and Relay Valve

With the air brake system fully charged, apply the brakes. Inspect the brake action on the wheels controlled by the quick release valve or relay valve in question. The brakes should apply promptly. Release the brakes and inspect to be sure that the air pressure exhausted rapidly from the exhaust port. Be sure the exhaust port is not restricted.

Rear Brake Balancing Valve

In a serviceability test (without trailer), disconnect the air line to the brake chamber and attach an air pressure gauge. A light, easy brake application should register about 13 psi. The gauge pressure should not exceed 17 psi, however.

Reservoir Safety Valve

To determine if the safety valve is operative, pull the exposed end of the valve stem. If the safety valve does not "blow off" when the stem is pulled, the valve ball is probably stuck in its seat. In such a case, remove and disassemble the valve for cleaning.

Check Pressure Build Up

With the engine running at fast idle speed, observe the time required to raise system pressure from 50 to 90 pounds. If more than five minutes is required, perform the leak tests as outlined in the following paragraphs.

LEAK TESTS

With the engine stopped and brakes *released,* watch the rate of drop in air pressure as registered by dash gauge. If the pressure drops faster than two pounds per minute, check the items outlined under *Compressing System.*

With the engine stopped and brakes fully *applied,* watch the rate of drop in air pressure as registered by the dash gauge. If the pressure drops faster than three pounds per minute, check the items listed under *Braking System.*

Compressing System

Compressor—With the engine stopped, discharge valve leakage can be detected by carefully listening at the compressor for the sound of escaping air. With air pressure applied to the unloader cavity (with governor cut out) remove the air filter and check for air leaks by squirting oil around the unloader plunger and stem. If excessive air leaks are found, replace the unloader piston seal.

Governor—With the governor in the "cut-out" position, test for leakage at the exhaust valve by applying soap suds to the exhaust vent in the body.

With the governor in the "cut-in" position, test for leakage at the inlet valve by applying soap suds to the exhaust vent in the body.

In either of the foregoing tests, leaking in excess of a one-inch soap bubble in three seconds indicates a defective governor.

Coat the entire governor with soap suds to detect diaphragm, gasket and cap screw leakage. No leakage is permissible.

Safety Valve—Coat the end of the safety valve with soap suds. Leaks causing not more than a three-inch soap bubble in three seconds are permissible.

Braking System

Brake Valve—With the pedal fully released, coat the exhaust port with soap suds to check for leaks. With the pedal fully applied, coat the exhaust port with soap suds and check for leaks. Leaks causing not more than a three-inch bubble in three seconds are permissible.

Brake Chambers—With the brakes fully *applied,* coat the clamp ring and bolt flanges holding the diaphragm in place with soap suds. Coat the rubber boot with soap suds. No leaks are permissible.

Quick Release Valve—With brakes *applied,* coat the exhaust port with soap suds to detect leakage. Leakage in excess of a three-inch soap bubble in three seconds is permissible.

Relay Valve—With the brakes *released,* coat the exhaust port with soap suds and observe the leakage.

With brakes fully *applied,* coat the exhaust port with soap suds and observe the leakage.

Leakage in either of the foregoing tests should not exceed a three-inch soap bubble in three seconds.

Rear Brake Balancing Valve—Coat the valve with soap suds to test for leaks at connections and around the diaphragm at the clamp ring. Tighten connections or clamp ring as necessary to stop leaks.

With pressure gauge connected to the brake chamber, apply brakes and hold. If pressure gradually builds up toward full brake pressure, plunger seat is leaking. Leak may be caused by dirty seat groove, a worn or damaged seat, or an improperly installed seat.

TROUBLE DIAGNOSIS

This diagnosis lists the more common causes of brake problems and their possible causes.

Insufficient Braking Action

1. Low reservoir pressure.
2. Brakes need lubrication, adjustment or relining.
3. Foot control valve delivery pressure too low due to malfunction in the valve or incorrect adjustment of treadle linkage.

Slow Brake Application

1. Lack of lubrication at brake shoe camshafts.
2. Low reservoir pressure.
3. Excessive lubrication during brake application.
4. Restricted or damaged pipes or hoses.
5. Defective foot control valve and treadle linkage.

Slow Brake Release

1. Restricted port, weak return spring or other defect in foot control valve.

2. Brakes require lubrication or adjustment.
3. Restricted or damaged pipes or hoses.
4. Defective or restricted quick release valve or relay valve.
5. Broken retraction springs or binding hold pins.

Brakes Do Not Apply

1. Low reservoir pressure.
2. Restricted or broken pipes or hoses.
3. Defective foot control valve.

Brakes Do Not Release

1. Restricted brake lines.
2. Weak return spring or other defect in foot control valve.
3. Broken brake shoe retracting springs or rusted front anchor pins.

Brakes Grab

1. Grease on brake lining.
2. Out-of-round brake drums.
3. Bind in brake shoe mountings.
4. Defective foot control valve.
5. Wet brakes.

Uneven Brakes

1. Brakes need adjustment, lubrication or relining.
2. Grease on brake linings.
3. Out-of-round brake drums.
4. Leaking brake chambers.
5. Broken brake chamber piston return spring.
6. Wet brakes.

Air Pressure Will Not Rise To Normal

1. Defective air gauge.
2. Governor out of adjustment.
3. Compressor worn out.
4. Compressor discharge valve leaking.
5. Slipping compressor drive belt.
6. Open reservoir drain cock.
7. Excessive leakage at lines and fittings to reservoir tank.

Slow Air Pressure Build Up

1. Excessive air leakage.
2. Slipping compressor drive belt.
3. Low engine speed.
4. Worn out compressor.
5. Excessive carbon in compressor head or discharge line.
6. Compressor discharge valve leakage.
7. Clogged compressor air strainer.

Abnormal Air Pressure

1. Defective or improperly adjusted governor.
2. Restriction in passage between governor and compressor unloading mechanism.
3. Compressor inlet valves stuck closed.
4. Leak at compressor unloading piston seal.
5. Defective air gauge.
6. Carbon deposits in cavities beneath unloading piston and passages in compressor cylinder head.

Quick Air Pressure Drop With Brakes Released and Engine Stopped

1. Excessive leakage at foot control valve, governor, compressor discharge valve, or at other points in the system.

Quick Air Pressure Drop With Brakes Applied and Engine Stopped

1. Excessive leakage in brake chambers, brake chamber diaphragms, tube and hose connections, or foot control valve.

Continuous or Intermittent Compressor Knocks

1. Loose drive pulley.
2. Worn or burned out compressor bearings.
3. Excessive carbon deposits in compressor cylinder head.

Safety Valve "Blows Off"

1. Governor cut-out setting adjusted too high.
2. Above normal system pressure.
3. Defective or improperly adjusted safety valve.

Excessive Oil or Water In Brake System

1. Worn compressor piston rings.
2. Dirty compressor air strainer.
3. Failure to drain reservoirs at regular intervals.

BRAKE BOOSTERS

BENDIX HYDROVAC

The Hydrovac, Figs. 1 and 2, consists of three basic units which have been so combined that they function as a single unit, all of which are controlled by hydraulic pressure developed within the hydraulic master cylinder of the vehicle brake system. The three basic units are:

1. A hydraulically actuated vacuum control valve which controls the degree of brake application or release. The control valve consists of a hydraulic actuated piston, a diaphragm, and a vacuum and atmospheric poppet.
2. A vacuum power cylinder which contains either a single or tandem piston and a push rod that connects the vacuum piston to the hydraulic piston of the hydraulic cylinder.
3. A hydraulic slave cylinder which contains a piston with a check valve. Some models incorporate a residual line pressure check valve.

Operation

As the brake pedal is depressed, the hydraulic pressure developed within the master cylinder is transmitted to the hydraulic piston of the control valve and to the hydraulic cylinder. With pressure applied to the control valve piston, the vacuum valve closes and the atmospheric valve opens to admit air to the control side of the vacuum power cylinder. As air is admitted, the forces acting upon the vacuum power cylinder pistons are transmitted directly to the hydraulic piston through the push rod. As the hydraulic piston starts to move, the piston check valve closes, Fig. 3, trapping fluid under pressure ahead of the piston.

The total hydraulic pressure created and transmitted to the wheel cylinders is the sum of the pressure developed as a result of the vacuum power cylinder push rod thrust and the pressure received by the Hydrovac from the master cylinder.

As the brake pedal is released, the pressure within the control valve hydraulic piston chamber is reduced, allowing the atmospheric poppet to close and reopen the vacuum poppet. The vacuum power cylinder piston is again balanced in vacuum and returns to release position. When the hydraulic piston nears the release end of its stroke, its check valve reopens, Fig. 4, thus permitting the full release of the brakes.

Single Piston Types

Disassembly

Fig. 5. Loosen hose clamps (1) and (2) and slide hose off tube. Loosen lock nut (3) and unscrew hydraulic cylinder (4) from end plate. Hold end cap (7) in vise and unscrew hydraulic cylinder, using open-end wrench on flat part of cylinder. Remove gasket (5) and bleed screw (6) from end cap. If unit has a residual line pressure check valve (11), remove this valve by taking out snap ring (8), washer (9) and spring (10).

Fig. 6. Remove control valve housing and valve parts. Scribe a line across cylinder shell and end plate so these can be reassembled in their original position. Remove hook bolts and then cylinder shell.

Fig. 7. Compress piston return spring by pressing down on end plate and install hook clamps as shown (dimensional sketch shows how to make these clamps). Remove hydraulic piston (2) from push rod by sliding snap ring or retainer spring back and removing pin. Remove hook clamps which will allow vacuum piston and spring to come out. If vacuum piston leather or any other part of the piston is damaged, disassemble piston. Disassemble hydraulic piston

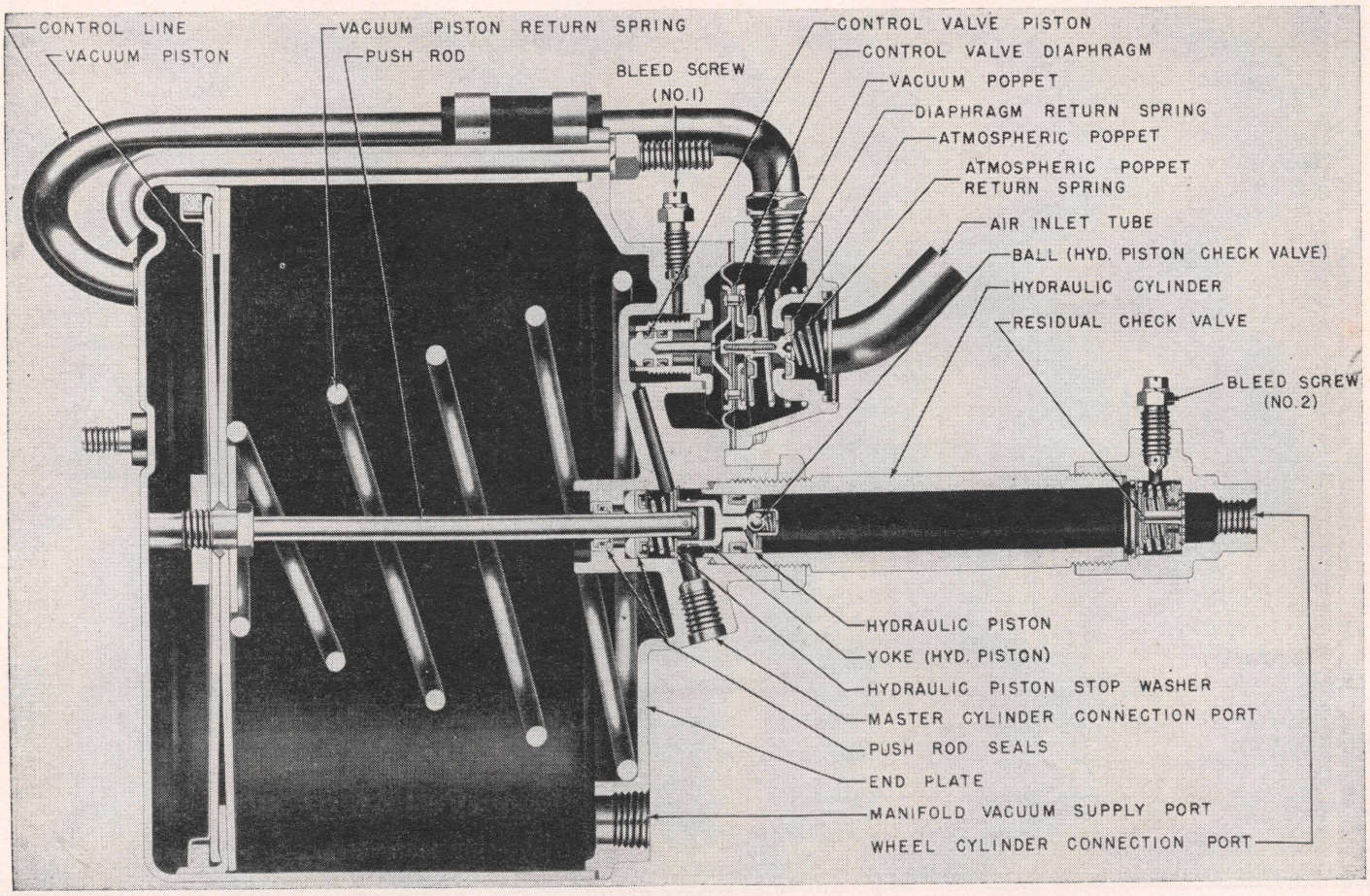

Fig. 1 Sectional view of Third Series Hydrovac with single piston

by first removing snap ring (1). Then remove spring cup, spring and ball.

Fig. 8. Place end plate over pins of end plate holding fixture (inset shows dimensions for making this fixture). Clamp fixture in vise. Remove retainer ring (4), using special tool T-25254, and stop washer (3). Using 1⅛" socket wrench, remove hydraulic valve piston fitting (2). Press out valve piston (1) and remove cup (or cups) from valve piston.

Fig. 9. Remove hydraulic cylinder end seal (3). Remove snap ring (2) and push rod seal cup parts. Lift end plate from fixture and place it upon two wooden blocks. Drive out push rod leather seal (1), using a flat end rod or drift.

NOTE—Immerse all metal parts in Bendix Metalclene Parts Cleaner. Dip all metal parts in the hydraulic system in alcohol before assembly. Use all parts furnished in the Hydrovac Repair Kit for the particular unit being serviced. Repair kits include new rubber parts. Old rubber parts should be discarded. If the bore of the vacuum cylinder shell is corroded or rusted, polish with fine emery cloth or steel wool; if badly pitted or scored, the shell should be replaced.

Assembly

Fig. 10. Press push rod leather seal into end plate with lip of leather toward hydraulic cylinder side of end plate. Assemble push rod hydraulic seal parts (1) as illustrated; stop washer (2) with chamfered side down, seal cup (3) with lip of cup up, retainer washer (4) with flat side next to cup, small end of spring

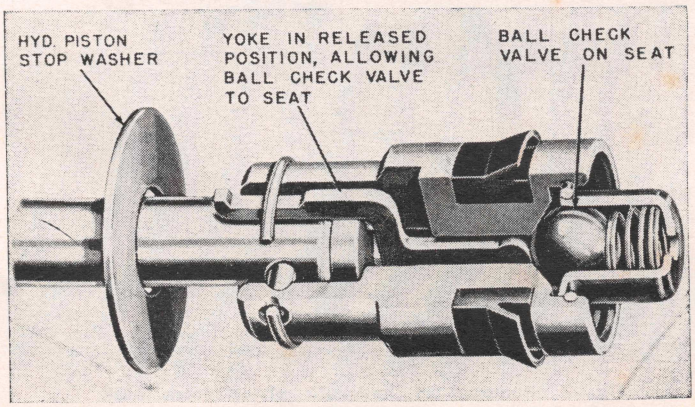

Fig. 3 Hydraulic check valve in applied position

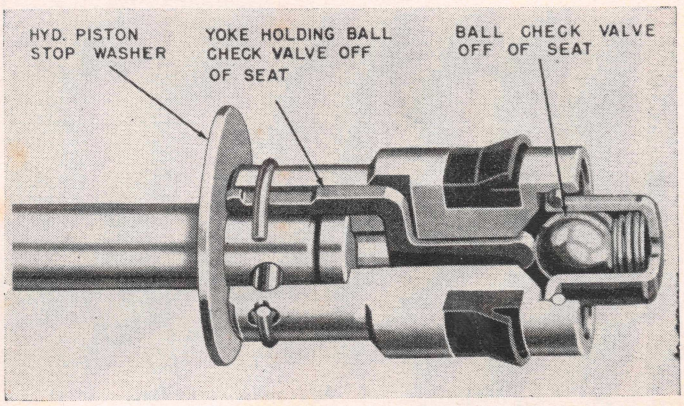

Fig. 4 Hydraulic check valve in released position

Fig. 2 Sectional view of Third Series Hydrovac with tandem piston

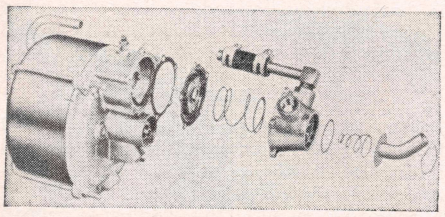

Fig. 6 Disassembly of vacuum control valve

down. Place stop washer against spring and assemble snap ring in groove.

Fig. 11. Assemble stop washer (4) and retainer ring (5), using special tool T-25254. Dip piston cup or cups in brake fluid and assemble on piston (1). Insert piston into fitting (3) with hole end of piston next to stop washer (4). Place end plate on holding fixture. Use new copper gasket (2) on hydraulic fitting (3) without groove. Use new rubber seal gasket (2) on hydraulic fitting with groove. Assemble fitting into end plate and securely tighten with 1⅛" socket wrench. When copper gasket (2) is used, fitting (3) should be tightened to 1100-1300 inch-pounds of torque.

Fig. 12. If vacuum piston has been disassembled to replace leather piston

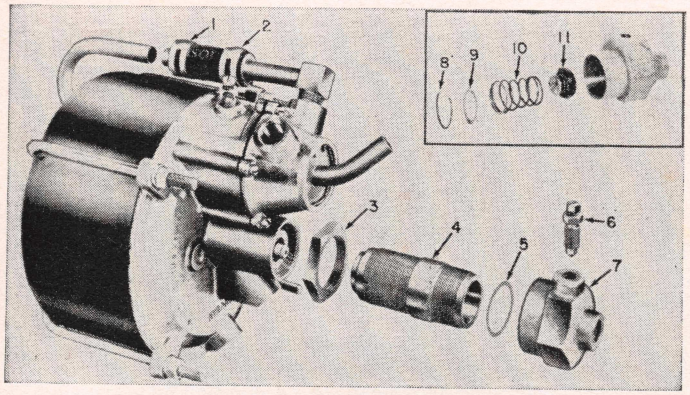

Fig. 5 Disassembly of hydraulic cylinder. Inset shows end cap with residual line pressure check valve

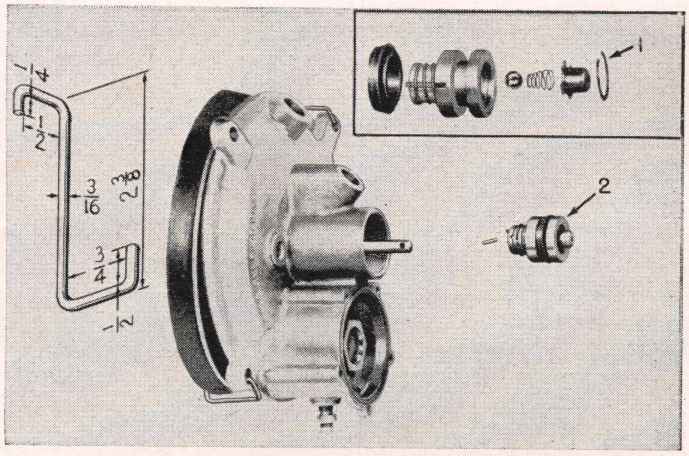

Fig. 7 Removal of hydraulic piston from push rod. Inset shows disassembly of hydraulic piston

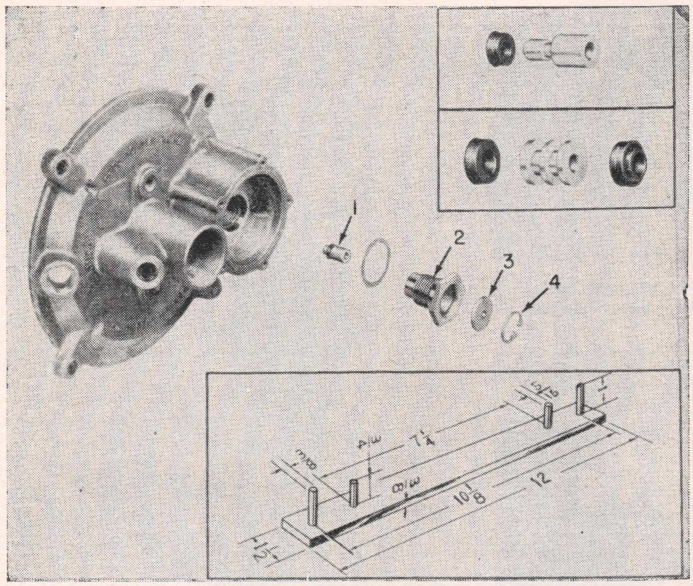

Fig. 8 Removal of hydraulic control valve piston assembly. Inset shows types of pistons

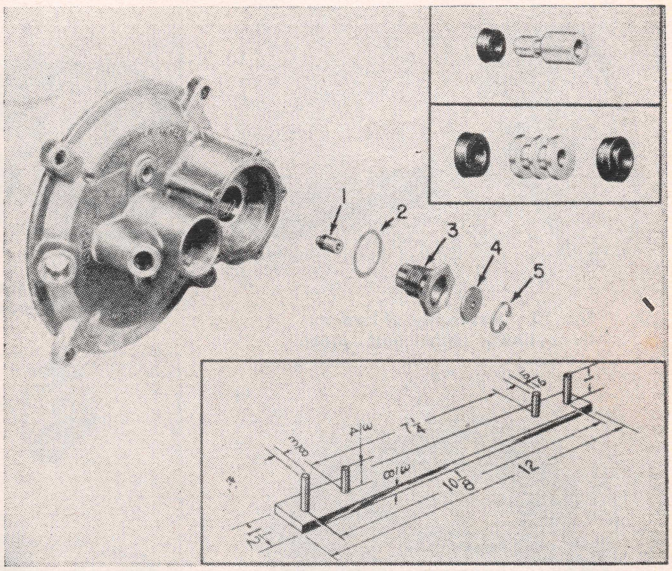

Fig. 11 Assembly of hydraulic control valve piston. Inset shows types of pistons

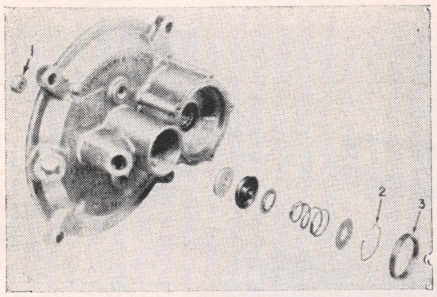

Fig. 9 Removal of hydraulic cylinder end seal, hydraulic and vacuum push rod seals

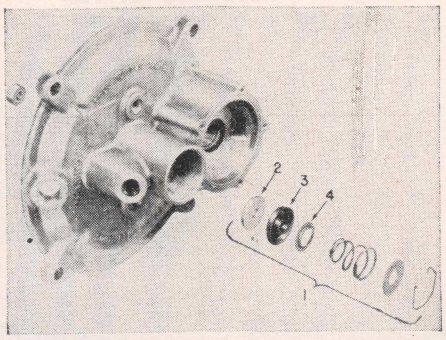

Fig. 10 Installing guide washer, hydraulic push rod seal and piston stop washer

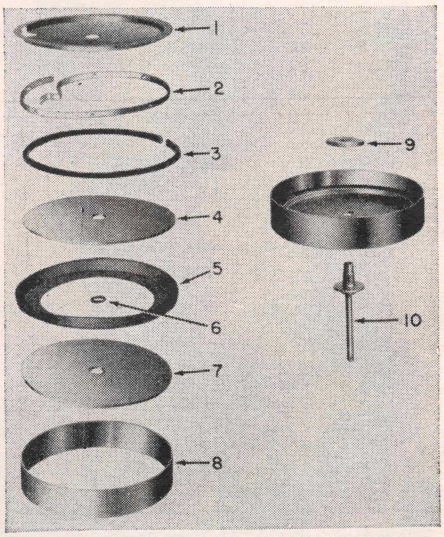

Fig. 12 Assembly of vacuum piston push rod

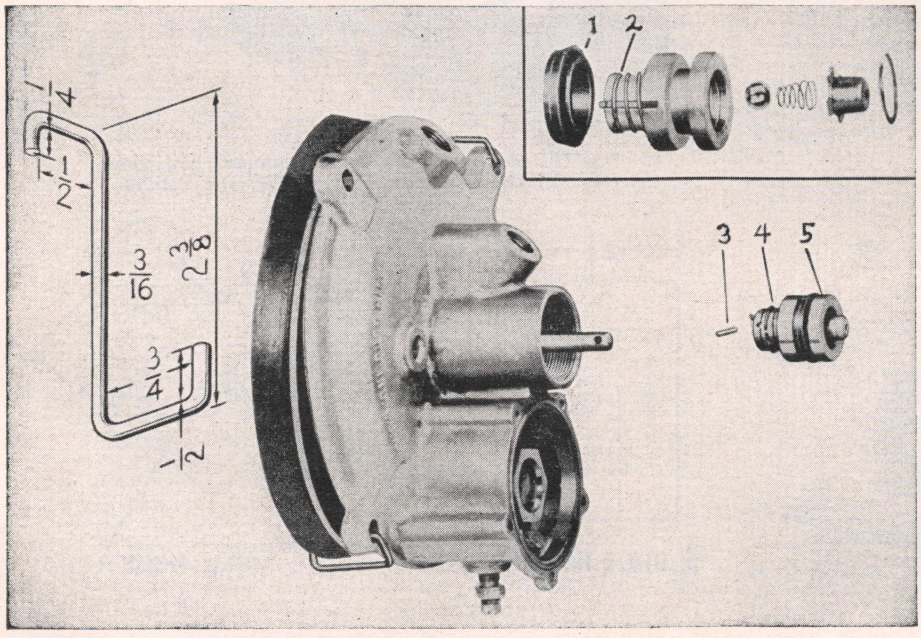

Fig. 13 Assembly of vacuum piston, piston return spring, end plate and hydraulic piston

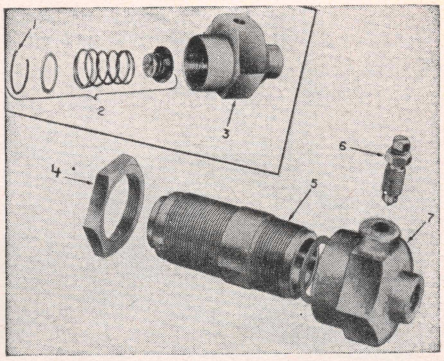

Fig. 14 Assembly of hydraulic cylinder and end cap. Inset shows end cap with residual pressure check valve

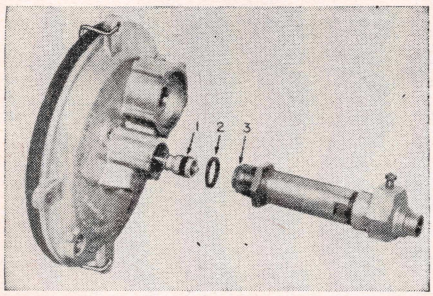

Fig. 15 Assembly of hydraulic cylinder into end plate

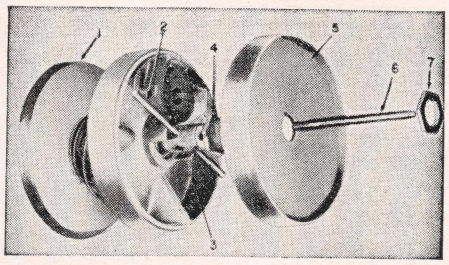

Fig. 22 Disassembly of push rod, vacuum pistons and center plate

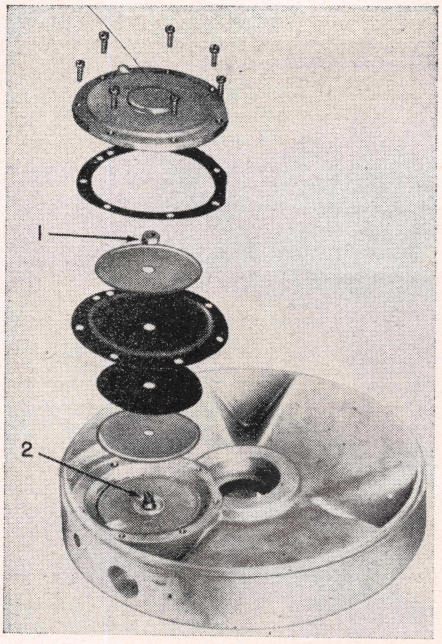

Fig. 23 Disassembly of fast application valve cover and diaphragm assembly

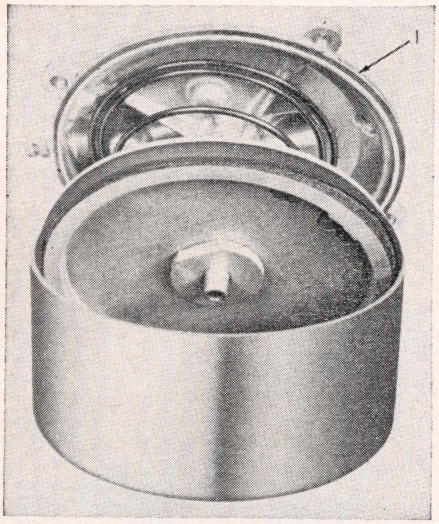

Fig. 16 Assembly of vacuum piston into cylinder shell

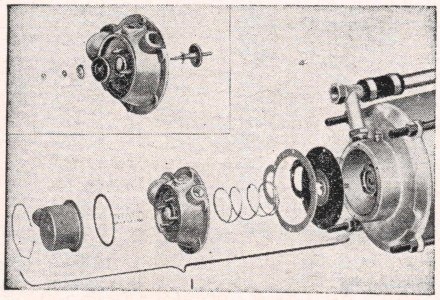

Fig. 18 Disassembly of vacuum control valve and poppets

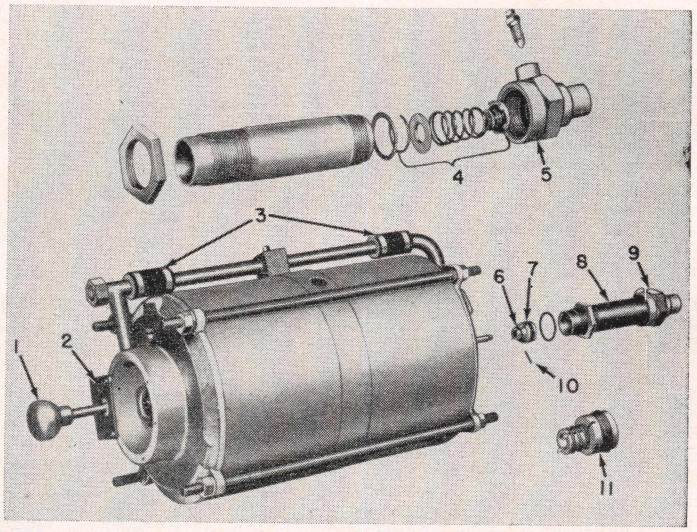

Fig. 19 Removal of hydraulic cylinder and piston (No. 11 shows piston with spring type retainer)

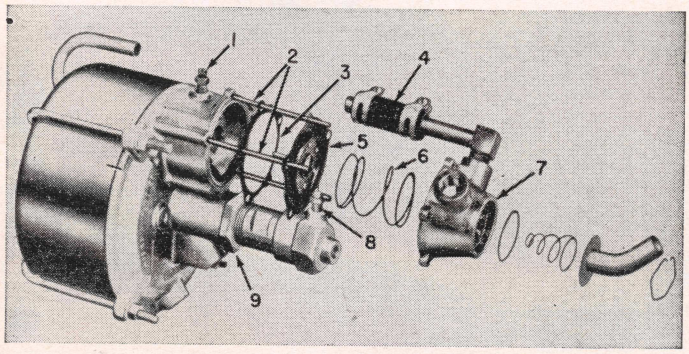

Fig. 17 Assembly of diaphragm, control valve housing and air cleaner tube

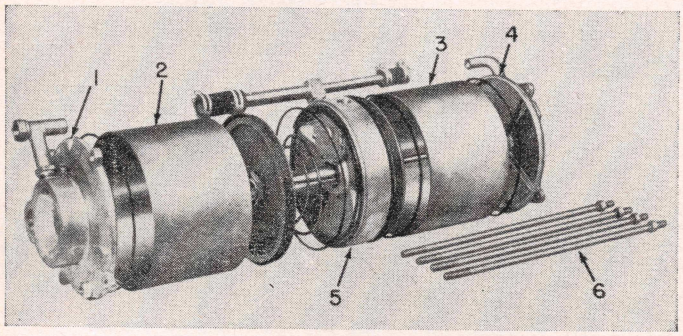

Fig. 21 Removal of cylinder studs, end plates, cylinder shells, center plate and pistons

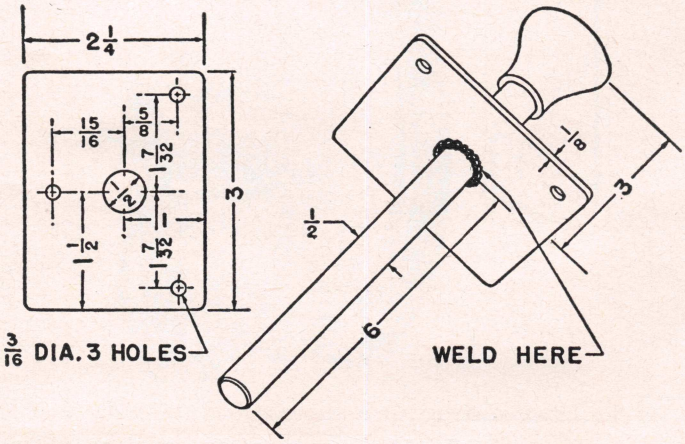

Fig. 20 Vacuum piston return spring compressing tool

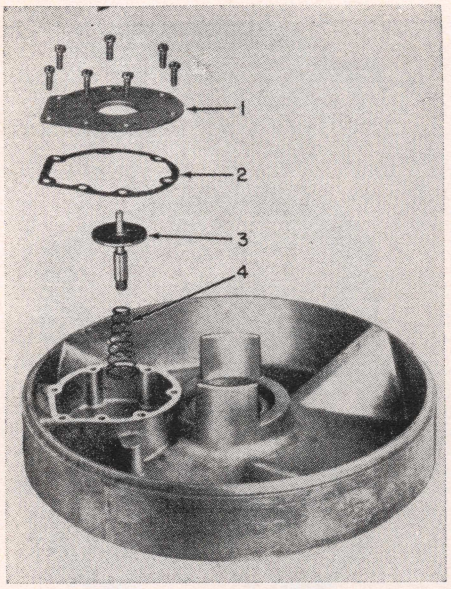

Fig. 24 Disassembly of fast application valve seat and poppet

packing or other parts, reassemble piston and push rod as illustrated. Drill $\frac{5}{16}$" hole in bench and place push rod (10) in hole with threaded end up. Assemble piston parts as follows: Flat washer over threaded end of push rod. Larger diameter piston plate (7) with chamfered side of hole up. Guide rubber seal ring (6) over threads. Place assembly ring (8) of correct size over piston plate and assemble following parts: Leather packing (5) with lip of packing up; smaller diameter piston plate (4) with chamfered side of hole down. Cut cotton wicking (3) to required length and assemble against inner face of lip of leather packing; assemble expander ring (2) inside of felt with gripper points up and notch at loop end of expander ring under clip located near opposite end of expander ring; retainer plate (1) with cut-out portion over loop of expander ring; thread nut (9) onto push rod finger tight. Clamp hexagonal section of push rod in vise and securely tighten nut. Care must be taken to prevent retainer plate from shifting while tightening nut. Stake nut at two places.

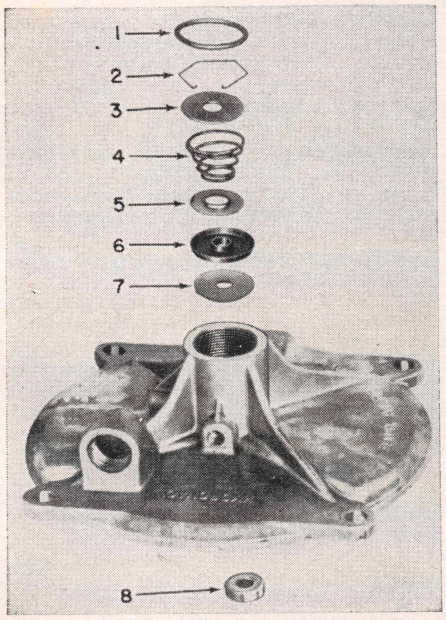

Fig. 25 Disassembly of hydraulic cylinder end seal, hydraulic and vacuum push rod seals

Fig. 13. Place vacuum piston return spring over push rod with small end of spring next to vacuum piston and carefully guide push rod through leather seal in end plate. Use hook clamps illustrated to hold end plate and piston together. Wash hydraulic cylinder piston parts in alcohol and assemble parts as shown in inset. Dip hydraulic piston cup (1) in brake fluid before assembly. Lip of piston cup extends toward check valve end of piston. Attach hydraulic piston (5) to push rod by means of retainer pin (3). Slide snap ring (4) or pin retaining spring (2) over hole in piston to hold retainer pin in place.

Fig. 14. If the Hydrovac is of the type having a residual line pressure check valve, assemble check valve parts (2) into end cap (3) as illustrated in inset. Be sure lock ring (1) is in its groove. Place new gasket into end cap (7) and thread hydraulic cylinder (5) into end cap with milled flats next to end cap. Securely tighten. Assemble bleed screw (6) and thread lock nut (4) on cylinder to limit of threads.

Fig. 15. Place hydraulic cylinder end seal (2) in end plate against shoulder and guide lip of piston cup (1) into bore of cylinder (3). Thread cylinder in by hand until end of cylinder bottoms firmly against end seal. Do not tighten cylinder or lock nut at this time.

Fig. 16. Place gasket (1) on end plate. The rubber ring gasket furnished in the repair kit is for use with Hydrovacs having a gasket retaining groove in the end plate; if the end plate is not grooved, use Vellumoid gasket of the correct size. Dip piston leather in vacuum cylinder oil and allow excess to drain off. Coat inside of cylinder shell with vacuum cylinder oil. Insert piston into cylinder by tipping piston as shown. Line up end plate with scribed marks previously made before disassembly. Attach hook bolts and tighten each bolt evenly until all are uniformly tight.

Fig. 17. Place guide pins (2) in end plate as shown and carefully assemble control valve parts. Remove guide pins one at a time and replace with a screw and lock washer. When assembling diaphragm (5), return spring (6) and control valve body (7), extreme care should be taken not to distort the diaphragm in compressing the spring. Assemble vacuum hose (4) in place and tighten clamps. Tighten hydraulic cylinder to align bleed screw (8) in end cap with bleed screw (1) in end plate. Tighten lock nut (9) securely.

Tandem Piston Types

Disassembly

Fig. 18. Remove control valve cover and valve parts (1). Some Hydrovacs have a vacuum by-pass tube which must be removed before the valve housing can be taken off. The inset shows removal of control valve poppets.

Fig. 19. Force vacuum cylinder pistons forward by inserting the special return spring compressing tool (1) through opening in end plate. Attach flange (2) of tool to end plate, using three of the valve cover screws. (Details for making tool shown in Fig. 20.) Loosen hydraulic cylinder check nut and remove cylinder (8). Remove hydraulic piston (7) from push rod by sliding snap ring (6) or push rod pin retaining spring back on piston, then remove retainer pin (10). Hold end cap (9) in vise and remove hydraulic cylinder. Disassemble residual line pressure check valve parts (4). Loosen vacuum hose clamps (3) and slide both hoses toward center of vacuum tube. Remove hydraulic by-pass tube (opposite side of Hydrovac from that illustrated).

Fig. 21. Remove four cylinder studs (6) and disassemble end plates (1) and (4), cylinder shells (2) and (3), and center plate (5).

Fig. 22. Compress piston return spring by forcing center plate and vacuum piston (1) together. Insert rod (2) through hole in piston rod to hold spring compressed as shown. Place assembly ring (SER-434) over piston (5) and remove piston rod nut (7), push rod pin (3) and push rod (6). Lift off piston assembly, keeping piston parts assembled within the assembly ring. Remove piston rod nut (4), press down on center plate to remove rod (2). Then remove center plate and piston return spring from piston and piston rod (1).

Fig. 23. This operation and the one shown in Fig. 24 apply only to Hydrovacs having the fast application valve in the center plate. Remove fast application valve cover. Hold valve shaft (2) with screw driver in slot provided when loosening nut (1) and disassemble diaphragm parts.

Fig. 24. Continue on Hydrovacs having fast application valve in center plate as follows: Turn center plate over and

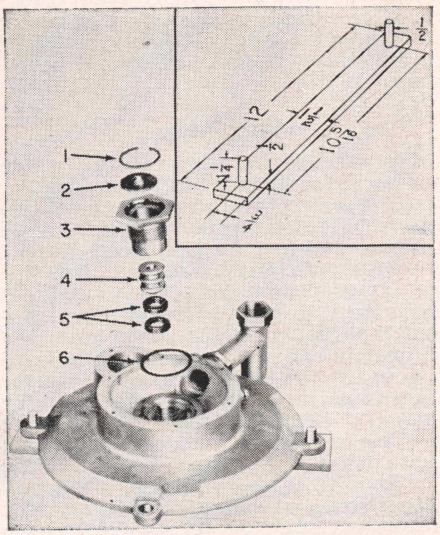

Fig. 26 Disassembly of hydraulic control valve fitting and piston

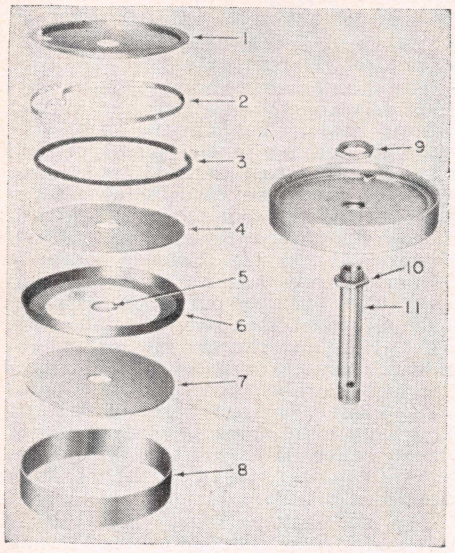

Fig. 27 Assembly of vacuum piston and piston rod

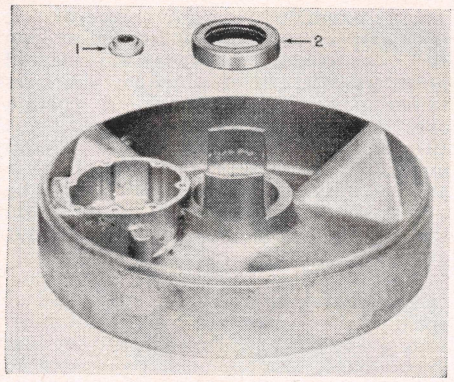

Fig. 28 Installing fast application valve and piston rod seals in center plate

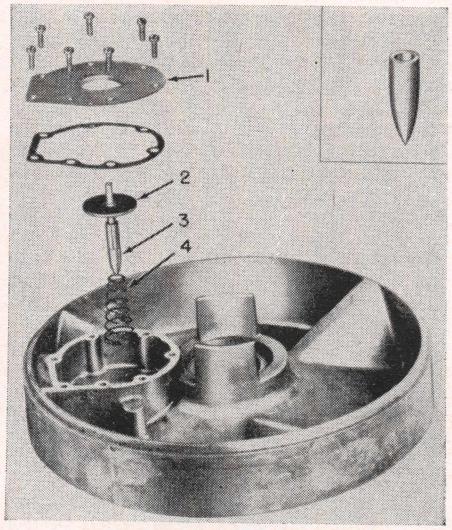

Fig. 29 Assembly of fast application valve poppet and seat

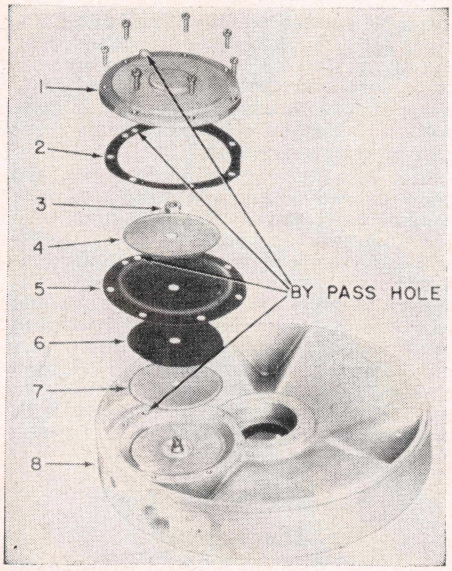

Fig. 30 Assembly of fast application valve diaphragm and cover

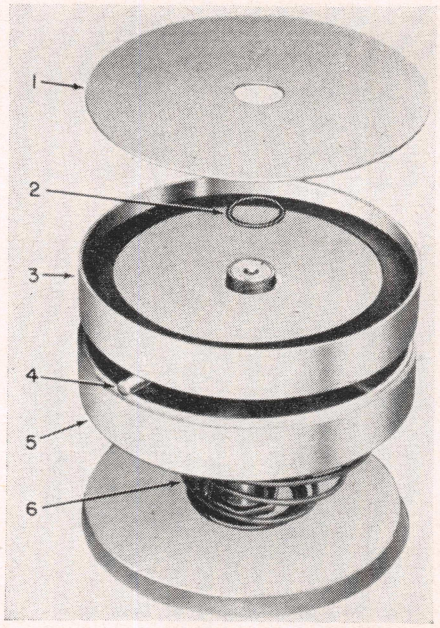

Fig. 31 Assembly of rear vacuum piston, piston return spring and center plate

remove valve seat plate (1), gasket (2), poppet valve (3), and spring (4).

Fig. 25. On all models, place front end plate on bench, flat side down, and remove ring seal (1), snap ring (2), retainer washer (3), push rod seal spring (4), flange washer (5); push rod rubber cup seal (6), and guide washer (7). Drive out push rod leather seal (8).

Fig. 26. Place end plate over pins of holding fixture (inset). With holding fixture clamped in vise, remove retainer ring (1), using special tool T-25254, and remove stop washer (2). Using a 1⅞" socket wrench, remove hydraulic valve fitting (3), push out hydraulic piston (4), and remove piston cups (5). Remove gasket (6) from fitting.

NOTE—Clean all metal parts in Bendix Metalclene Parts Cleaner. Dip all metal parts used in hydraulic system in alcohol before assembly. Use all parts furnished in Hydrovac Repair Kit for the model being serviced. Discard old rubber parts. If bore of vacuum cylinder shell is corroded or rusted, polish with fine emery cloth or steel wool. If badly pitted or scored, the cylinder shell should be replaced.

Assembly

Fig. 27. If the rear vacuum piston has been disassembled to replace leather piston packing or other piston parts, reassemble piston as illustrated. Drill a 1⅜" hole in bench for piston rod. Thread nut (10) onto piston rod with flat side up. Drop piston rod (11) in hole of bench with by-pass hole end down. Assemble larger diameter piston plate (7) on piston rod with chamfered side of hole up. Guide rubber seal ring (5) over threads of piston rod. Place assembly ring (8) (SER-434) over piston plate and assemble piston parts as follows: Leather packing (6) with lip of packing up; smaller diameter piston plate (4) with chamfered side of hole down. Cut cotton wicking (3) to required length and assemble against inner face of lip of leather packing; assemble expander ring (2) inside of wick with gripper points up and notch at loop end of expander ring under clip located near opposite end of expander ring; retainer plate (1) with cut-out portion over loop of expander ring; thread nut (9) onto piston rod until flush with end of piston rod. Stake nut securely at two places. Clamp outer or staked nut in vise and securely tighten inner nut (10) against piston plate.

Fig. 28. Press leather seals (1) and (2) into place in center plate. Seal (1) should be flush with bottom of hole and seal (2) should rest against shoulder in center plate. On Hydrovacs without fast application valve seal (1) is not used and seal (2) should be pressed into center plate until flush with bottom of hole.

Fig. 29. Assemble fast application valve poppet into center plate. Be sure small end of return spring (4) is up. Place bullet nose tool (3) (T-25265) on poppet valve shaft at threaded end to prevent shoulder on valve shaft from damaging leather seal when assembling shaft. Install gasket, valve seat plate (1) with seat down and replace screws and lock washers.

Fig. 30. Turn center plate over and assemble diaphragm parts as illustrated, noting the following: Rounded edge of diaphragm plate (7) is up; place diaphragm gasket (6) on plate; assemble diaphragm (5) so that screw holes and by-pass hole lines up with holes in center plate (8); rounded edge of diaphragm plate (4) is down. Assemble nut (3), hold valve shaft with screw driver as nut (3) is tightened; stake nut at two places. Assemble cover gasket (2) and cover plate (1) with screws and lock washers.

Fig. 31. Place piston return spring (6) over piston rod with small end of spring next to piston. Carefully guide piston rod through leather seal in center plate (5), having piston stop flanges of

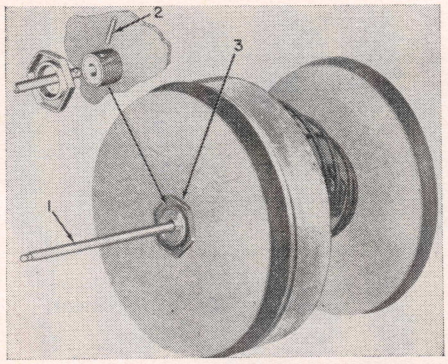

Fig. 32 Assembly of front vacuum piston and push rod

center plate up. Press down on center plate and insert rod (4) through hole in piston rod. Thread piston rod nut onto piston rod to limit of threads with flat side of nut up. If forward piston has been disassembled to replace leather piston packing or other parts, reassemble piston parts in assembly ring as shown in Fig. 27. Hold piston parts in assembly ring and turn assembly ring over. Remove outer or larger diameter piston plate (1) and seal ring (2). With assembly ring (3) still in place, guide remaining piston parts over end of piston rod up against piston nut. Carefully guide seal ring (2) over threads of piston rod and assemble larger diameter piston plate (1) over piston rod with chamfered side of hole down.

Fig. 32. Assemble large end of push rod (1) in end of piston rod and replace retainer pin (2). Thread piston rod nut (3) onto piston rod with flat side down until nut is flush with end of piston rod. Stake nut securely in two places. Hold piston rod nut (3) in vise or with wrench and tighten inner nut securely against piston. Care must be taken when tightening nut to prevent expander ring retainer plate from shifting. Remove assembly ring and then rod which was used to hold the return spring compressed during operations shown in Figs. 31 and 32.

Fig. 33. Hold end cap (4) in vise and assemble parts as shown. The small end of spring (2) must be placed inside clips of check valve (3). Hydraulic cylinder should be assembled with milled flats next to end cap. Thread lock nut up to limit of threads on hydraulic cylinder. Replace bleed screw in end cap.

Fig. 34. Press push rod leather seal (7) into front end plate (from side opposite to that shown). The lip of leather seal should be toward hydraulic cylinder end of end plate. Assemble push rod hydraulic seal parts as shown, noting the following: Chamfered side of stop washer (6) is down. Lip of cup (5) is up. Flat side of washer (4) is next to cup. Small end of spring (3) is down. Place washer (2) against spring. Install snap ring (1) into second (inner) groove of end plate.

Fig. 35. Assemble stop washer (2) with flat side into fitting (3) and retainer ring (1) using special tool T-25254. Dip piston cups (5) in brake fluid and assemble on piston (4) with lips of cups away from each other. Insert piston (4) into fitting (3) with hole end of piston next to stop washer (2). Place end plate on holding fixture. Use new copper gasket (6) on hydraulic fitting (3), without groove. Use new rubber seal gasket (6) on fitting (3) with groove. Securely tighten fitting into end plate with 1⅞" socket wrench. Where copper gasket (6) is used, fitting (3) should be tightened to approximately 4,000 inch-pounds of torque.

Fig. 36. Assemble poppet valves and related parts into control valve housing. Stake nut (1) at two places after assembly. If poppet valves are disassembled, always replace lead washer.

Fig. 37. Hold hydraulic cylinder end cap (2) in a vise and assemble parts. Thread hydraulic cylinder into front end plate—plate nearest to cylinder. Place gasket (1) on ledge of end plate, then place cylinder shell into position. Coat inside of cylinder shell with vacuum cylinder oil. Dip piston leathers in vacuum cylinder oil. Place gasket (3) on ledge of center plate. Guide push rod (4) carefully through seal in end plate. Align vacuum tube on center plate with vacuum tube on front end plate.

Fig. 38. Assemble rear cylinder shell and related parts. Assemble gasket (2)

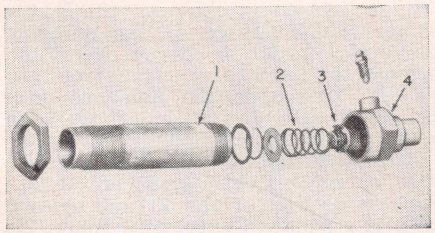

Fig. 33 Assembly of residual pressure check valve, hydraulic cylinder and end cap

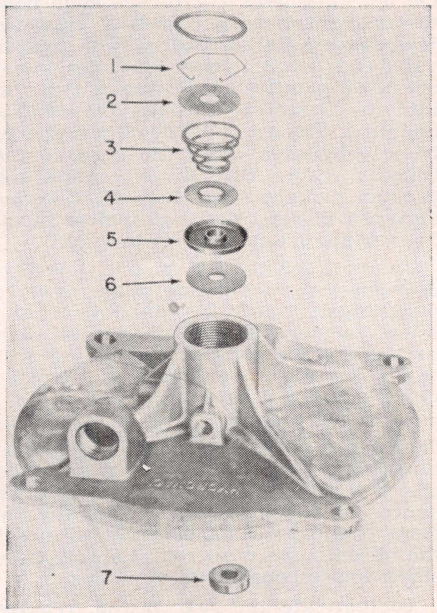

Fig. 34 Assembly of push rod seals, guide washer and piston stop washer

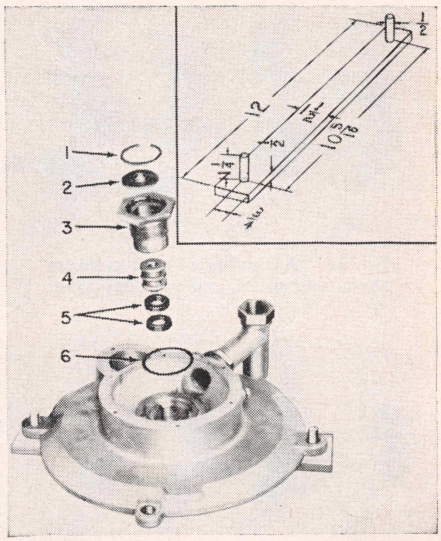

Fig. 35 Assembly of hydraulic control valve fitting and piston

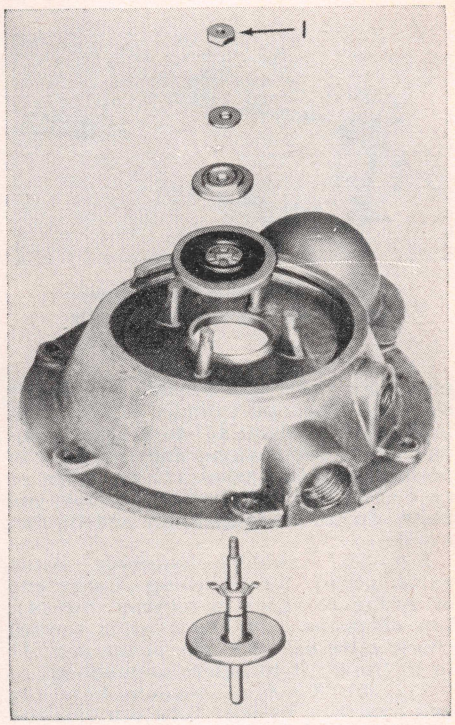

Fig. 36 Assembly of vacuum control valve poppets

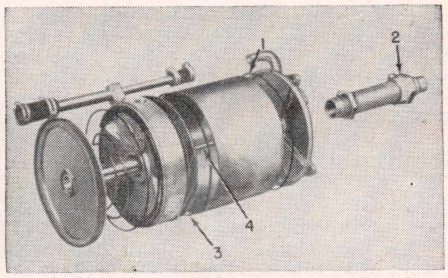

Fig. 37 Assembly of hydraulic cylinder, front end plate, front cylinder shell, center plate and pistons

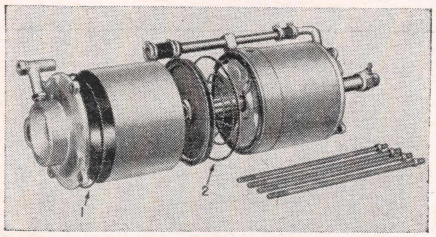

Fig. 38 Assembly of rear cylinder shell, end plate and cylinder studs

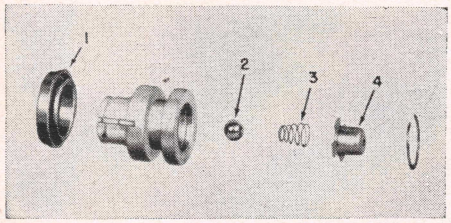

Fig. 39 Assembly of hydraulic piston check valve and piston cup

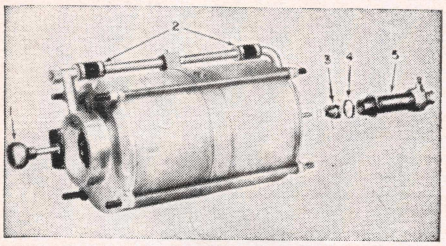

Fig. 40 Assembly of hydraulic piston and cylinder assembly

on center plate. Coat inside of cylinder shell with vacuum cylinder oil. Tip cylinder shell to about 45° to prevent damage to leather packing and assemble in position. Place gasket (1) on ledge of rear end plate. Align and assemble end plate. Install cylinder studs and tighten evenly.

Fig. 39. Assemble hydraulic piston parts, noting the following: Large end of spring (3) goes in retainer cup (4). Lip of piston cup (1) extends toward check valve ball (2). Dip piston cup (1) in hydraulic fluid before assembling.

Fig. 40. Assemble vacuum hose (2) and hydraulic by-pass tube (on opposite side of Hydrovac from that shown). Remove hydraulic cylinder (5) and insert spring compressing tool (1). Attach flange of spring compressing tool with three screws. Assemble hydraulic piston (3) to push rod, being careful that lock ring or retaining spring is in position over retainer pin. Assemble hydraulic cylinder end seal (4) in groove of end plate.

Fig. 41. Thread hydraulic cylinder into end plate by hand until dimension "A" corresponds to the measurement given for the Hydrovac being serviced. For Atlas models the dimension is $7\frac{51}{64}$"; Mogul models $8\frac{51}{64}$"; Dreadnaught models $10\frac{5}{8}$"—all measurements to be correct within plus or minus ½ turn. Align bleed screw located in end cap with bleed screw located in control valve, holding dimension "A" to the nearest half-turn. Securely tighten lock nut. Remove spring compressor tool.

Fig. 42. Place guide pins (3) in end plate and carefully assemble parts. Remove guide pins one at a time and replace with a screw and lock washer. When assembling diaphragm (5), diaphragm gasket (4), return spring (2) and control valve body (1), extreme care should be taken not to distort the diaphragm in compressing the spring. Diaphragm stem (6) fits into hole of hydraulic control piston (7). If Hydrovac being repaired has a fast application valve, replace the fast application valve vacuum control tube.

Lubrication

Do not lubricate a Hydrovac until it is permanently installed on the vehicle. If lubricated beforehand, handling of the Hydrovac may cause oil to flow into the hydraulic portion of the unit and ruin the rubber parts. Have engine shut off and brakes released when adding vacuum cylinder oil.

All Model C single or tandem piston Hydrovacs should be lubricated on a mileage or time basis. Lubricate all 6¾" Model C Hydrovacs every 20,000 miles or once a year whichever occurs first; all 9½" single piston Hydrovacs every 10,000 miles or every six months whichever occurs first; all 9½" tandem piston Hydrovacs every 20,000 miles or once a year whichever occurs first. Early type Model C Hydrovacs do not have lubrication plugs.

To lubricate single piston Hydrovacs with lubrication plugs, remove lubrication plug and inject vacuum cylinder oil through the fitting up to the point where the oil begins to run out of the port—See Fig. 43. Replace and tighten plug.

To lubricate single piston Hydrovacs without lubrication plugs, loosen hose clamps and slide hose on tube connecting control valve with vacuum cylinder shell. On 6¾" diameter Hydrovacs slide hose toward control valve. On 9½" diameter Hydrovacs slide hose away from control valve end. Using gun type of oiler, inject specified quantity of vacuum cylinder oil into the Hydrovac through the control line tube. The spout of the oil gun should be inserted well down the bend of the tube to insure that all oil enters the vacuum cylinder—See Fig. 44. Use one ounce in all 6¾" and two ounces in all 9½" single piston type Hydrovacs.

To lubricate tandem piston type Hydrovacs with lubrication plugs, remove pipe plugs (1) and (2)—See Fig. 45, and inject vacuum cylinder oil through each port up to the point where the oil just begins to run out of the port. Replace pipe plugs and securely tighten.

To lubricate the forward piston of tandem piston Hydrovacs without lubrication plugs, remove the vacuum line tube elbow—See Fig. 46, and inject two ounces of vacuum cylinder oil into the front chamber, using care not to direct the oil onto the push rod. Replace tube elbow and reconnect vacuum line.

To lubricate the rear piston, remove the control valve housing—See Fig. 47, and inject two ounces of vacuum cylinder oil through the passage in the rear end plate. Replace the control valve housing.

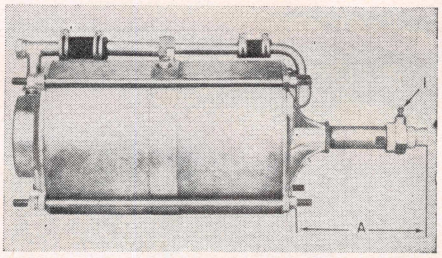

Fig. 41 Cylinder stud to hydraulic cylinder end measurement

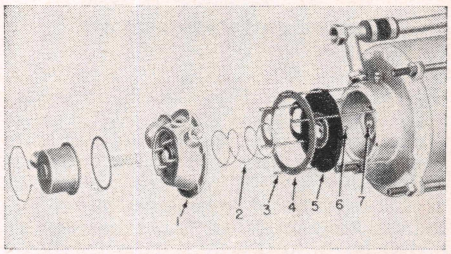

Fig. 42 Assembly of vacuum control valve diaphragm, valve housing and air cleaner cover

Air Cleaner Service

The air cleaner should be inspected every 1,000 miles and disassembled for cleaning. Where operating conditions are unusually dirty, perform this service more frequently.

Remove air cleaner cover screw, remove hair filter element and screens and wash in cleaning solvent. Dry, then saturate with light engine oil. Reassemble and install.

Air cleaner hose should be inspected for damage, and hose clamps secured to prevent leakage.

Vacuum Connections

Remove vacuum connection fitting from the intake manifold every 10,000 miles and inspect the elbow and vacuum line or tubing for possible obstruction. Also inspect hose fittings each 10,000 miles for tightness, and vacuum hose for damage or deterioration due to extreme conditions.

Bleeding Hydrovac, Manual

Manual bleeding requires filling the master cylinder reservoir and pumping the brake pedal to force the fluid through the lines to expel air from the system. This operation must be done with the engine shut off and no vacuum in the power brake system.

With the master cylinder reservoir filled, open No. 1 bleed screw on the Hydrovac (see Figs. 1 and 2) and depress the brake pedal to expel air. When the brake pedal has reached the toe board, close the bleed screw before returning pedal to release position. Repeat this procedure until solid fluid, free from

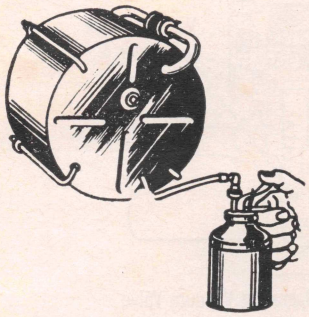

Fig. 43 Single piston with lubrication port

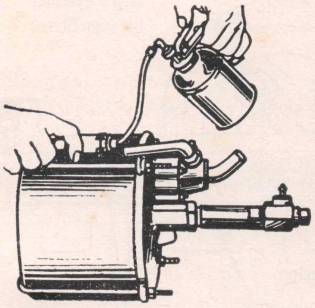

Fig. 44 Single piston without lubrication port

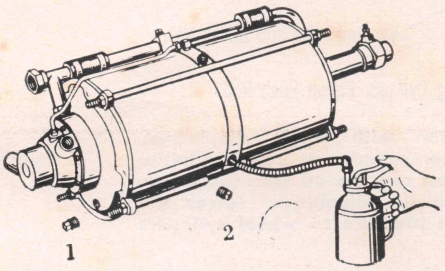

Fig. 45 Tandem piston with lubrication ports

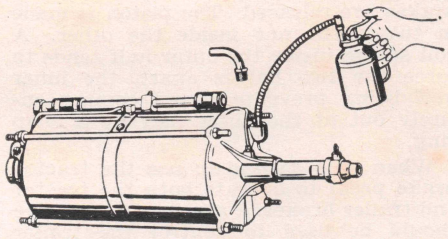

Fig. 46 Tandem piston without lubrication ports (lubrication of forward piston)

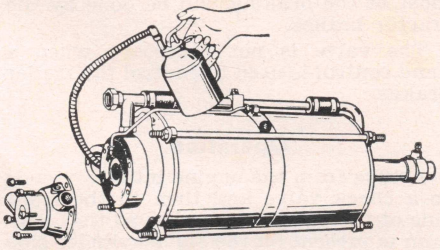

Fig. 47 Tandem piston without lubrication ports (lubrication of rear piston)

bubbles, comes from the bleed screw. Check the master cylinder frequently to insure an ample supply of fluid.

Using this method, bleed No. 1 and No. 2 bleed screws on the Hydrovac and then proceed to the vehicle wheel cylinders.

Pressure Bleeding

This operation must be done with the engine shut off and no vacuum in the power brake system. Make certain there is sufficient brake fluid in the bleeder tank before starting and that the pressure is from 10 to 30 pounds per square inch.

With bleeder tank prepared, fill master cylinder reservoir before attaching hose from bleeder tank to the reservoir. With pressure from the bleeder tank applied to the master cylinder, bleed the Hydrovac first, starting with the bleed screw on the control valve (bleed screw No. 1). When a solid stream of fluid (free from bubbles) is obtained, close bleed screw securely and then bleed the Hydrovac hydraulic cylinder (bleed screw No. 2). Finally, proceed to the vehicle wheel cylinders and bleed them in like manner.

MODEL "C" DIAPHRAGM TYPE HYDROVAC

This device, Fig. 48, is a self-contained hydraulic-vacuum unit which consists of:

1. A vacuum power chamber which consists of a power diaphragm and a push rod that connects the power diaphragm to the hydraulic piston.
2. A hydraulic cylinder which contains a hydraulic piston and check valve.
3. A vacuum control valve which controls the power output of the vacuum power chamber in accordance to the hydraulic pressure developed within the brake master cylinder.

Disassembly

Use care in handling hydraulic system parts to prevent their coming into contact with mineral oil or greases. Do not handle hydraulic cups and seals with greasy hands.

Loosen check nut and unscrew hydraulic cylinder from end plate. Remove piston, cup and spring. Clamp end cap in vise to loosen hydraulic cylinder. Then remove check nut seal, check nut, hydraulic cylinder and gasket from end cap.

Scribe lines across two halves of diaphragm chamber and across end plate and control valve housing to assure correct reassembly.

Loosen hose clamps on control tube and slide hose toward control valve end. Remove end plate attaching nuts and lockwashers. Separate end plate assembly from vacuum power chamber and remove return spring. Remove snap ring, guide bearing, tube seal, push rod seal and stop washer from end plate.

Remove control valve housing and valve parts starting with lock ring. Remove control valve piston fitting lock ring and washer. With a socket wrench, remove fitting and press out piston. Re-

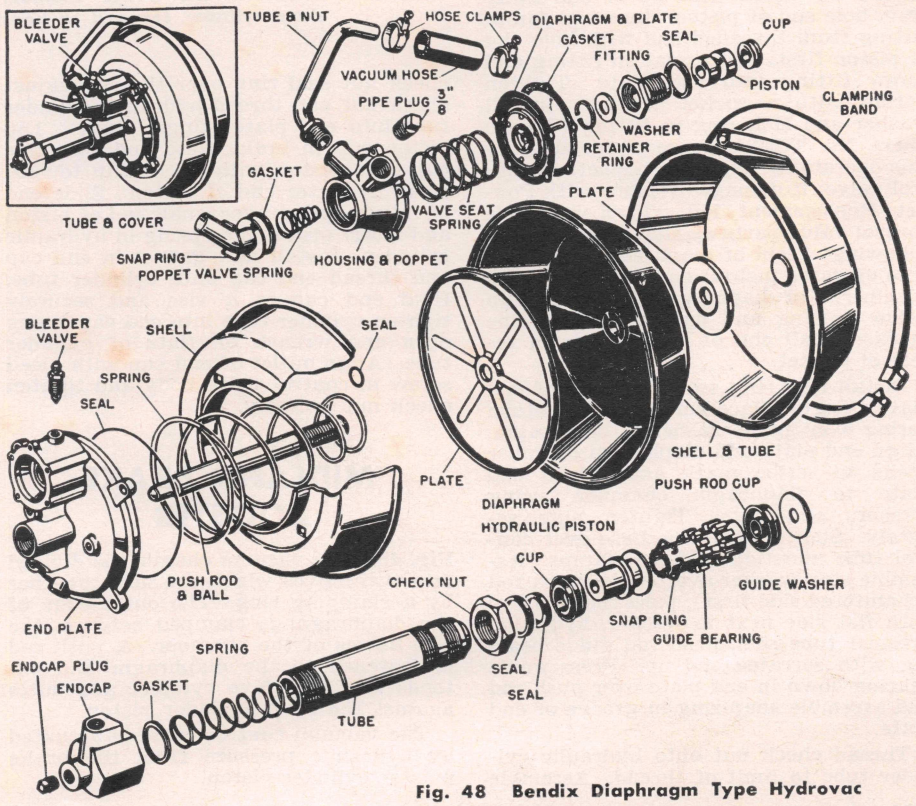

Fig. 48 Bendix Diaphragm Type Hydrovac

move cup from piston and seal ring from fitting.

Remove nut, lockwasher and bolt from clamp band and remove band. Remove diaphragm shell, diaphragm and push rod. Drive out attaching bolts and remove seals.

Clamp push rod nut in vise and remove nut, cupped washer, diaphragm, diaphragm plate and guide washer. If replacement of push rod is necessary, remove nut from push rod.

Cleaning

All parts that are to be reused should be thoroughly cleaned by immersion in an approved parts cleaner. After cleaning, those parts which come into contact with hydraulic brake fluid should be rewashed in clean alcohol before assembly. Use all parts furnished in the Hydrovac Repair Kit. Discard all old rubber parts.

Reassembly

Thread push rod nut onto push rod to limit of thread. Assemble guide washer; diaphragm plate with flat side next to diaphragm; diaphragm with cupped side next to diaphragm plate; large washer with concave side next to diaphragm and nut. Securely tighten nut and stake in place.

Install new rubber seals on bolts and assemble bolts in shell; stake bolts in shell. Place rear shell on bench and assemble diaphragm and push rod assembly and front shell. Align shells to scribe marks and bead on diaphragm with rim of shells. Assemble clamp band over rim of shells and assemble bolt, washer and nut. Securely tighten nut.

Dip piston cup in brake fluid and assemble on piston with lip of cup away from hole end of piston. Insert piston in fitting from threaded end with hole end of piston first. Place seal on fitting and screw fitting into end plate. Tighten fitting with a socket wrench. Install washer and lock ring in fitting (Truarc pliers No. T-25254 is recommended for this operation). Examine poppets in control valve; if damaged replace with Poppet Replacement Kit. Then assemble control valve parts as shown, noting the following: Stem of diaphragm goes into hole of valve piston; end of spring goes within rim of diaphragm flange; line up valve housing and end plate to scribe marks; small end of spring goes in recess of poppet.

Install new ring seal in groove of end plate flange. Place small end of return spring over guide washer of diaphragm. Align end plate and diaphragm chamber shells to scribe mark and attach end plate to diaphragm chamber, using washers and nuts. Tighten nuts securely. Slide control line hose over control tube and tighten hose clamps. Assemble stop washer over end of push rod (chamfered side first), push rod seal cap with flat side next to washer, hydraulic cylinder tube seal, push rod guide bearing with serrated end up. Press guide bearing down in end plate over push rod and assemble snap ring in groove of end plate.

Thread check nut onto hydraulic cylinder tube to limit of thread. Assemble check nut seal ring over thread against check nut and thread hydraulic cylinder tube into end plate (finger tight). Dip piston cup in brake fluid and assemble cup onto piston with lip of cup toward small diameter end of piston. Slide end of return spring over small end of piston and insert piston and spring in hydraulic cylinder. Install new gasket in end cap and thread end cap onto cylinder tube. Hold end cap in a vise and securely tighten cylinder tube into end cap, using open end wrench on flats of cylinder tube. Align outlet of end cap with bleed screw in control valve body and tighten check nut securely.

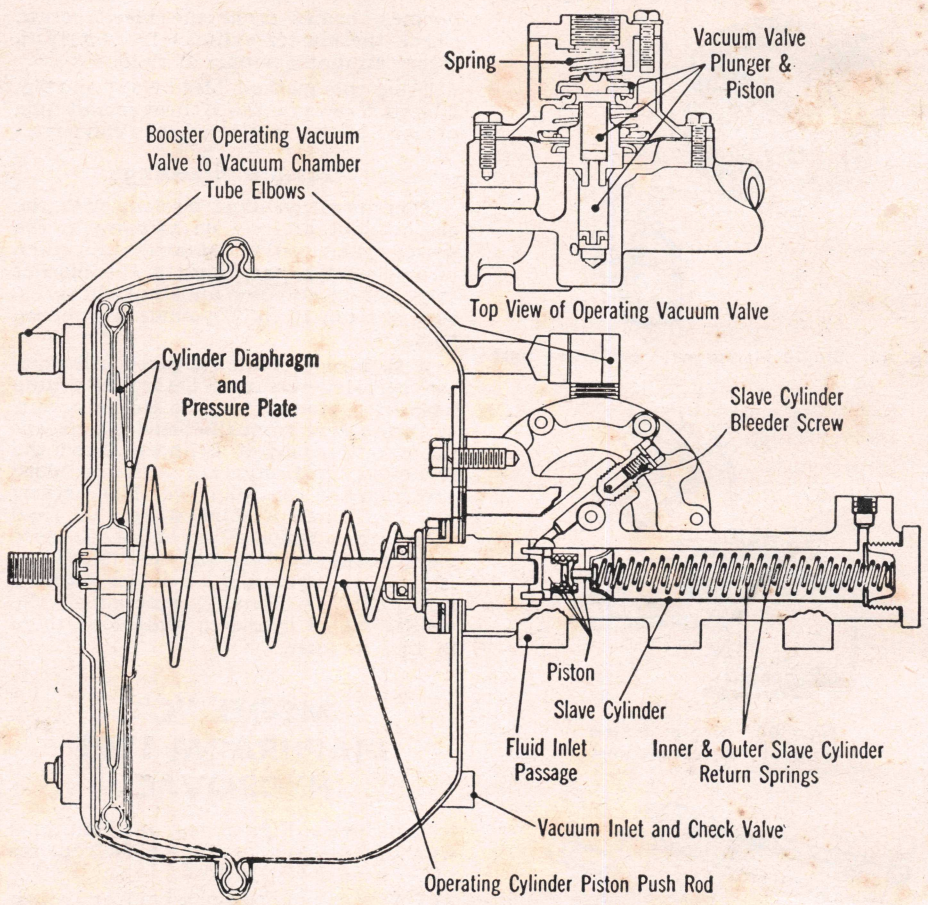

Fig. 49 MIDLAND vacuum booster with single diaphragm. This device allows the vehicle master cylinder to perform initial braking. After pressure in the system reaches 40 lbs., air is admitted to the power chamber and the diaphragm forces the slave cylinder forward to boost the pressure to wheel cylinders

MIDLAND BRAKE BOOSTER

Fig. 49—The vacuum chamber is divided into two halves which are held together by a clamping ring. The outer edge of the diaphragm is clamped between the two halves of the chamber. A push rod is fastened to the diaphragm and extends into the slave cylinder and butts against the slave cylinder piston.

The vacuum control valve is actuated by hydraulic pressure from the brake master cylinder piston.

The slave cylinder is somewhat similar to the brake master cylinder in that it contains a piston, piston cup and a spring to force the piston back when the brakes are released. The piston is made in two parts, one inside the other. A coil spring inside the outer half tends to force the two halves apart, the inner half being prevented from coming entirely out of the outer half by a snap ring.

When it is desired to use the tractor brake pedal to operate both the tractor and trailer brakes, a synchronizing valve should be used to control the trailer brakes. This valve properly synchronizes the tractor and trailer brakes. If it is not used, the tractor brakes will not only start to brake before the trailer but also most of the braking will be done by the tractor brakes.

The valve is not necessary when a hand control is used to control the trailer brakes.

Operation

A tube from the engine intake extends to a check valve and then to the front side of the vacuum chamber so that vacuum is present on the slave cylinder side of the vacuum chamber diaphragm at all times that the engine is running.

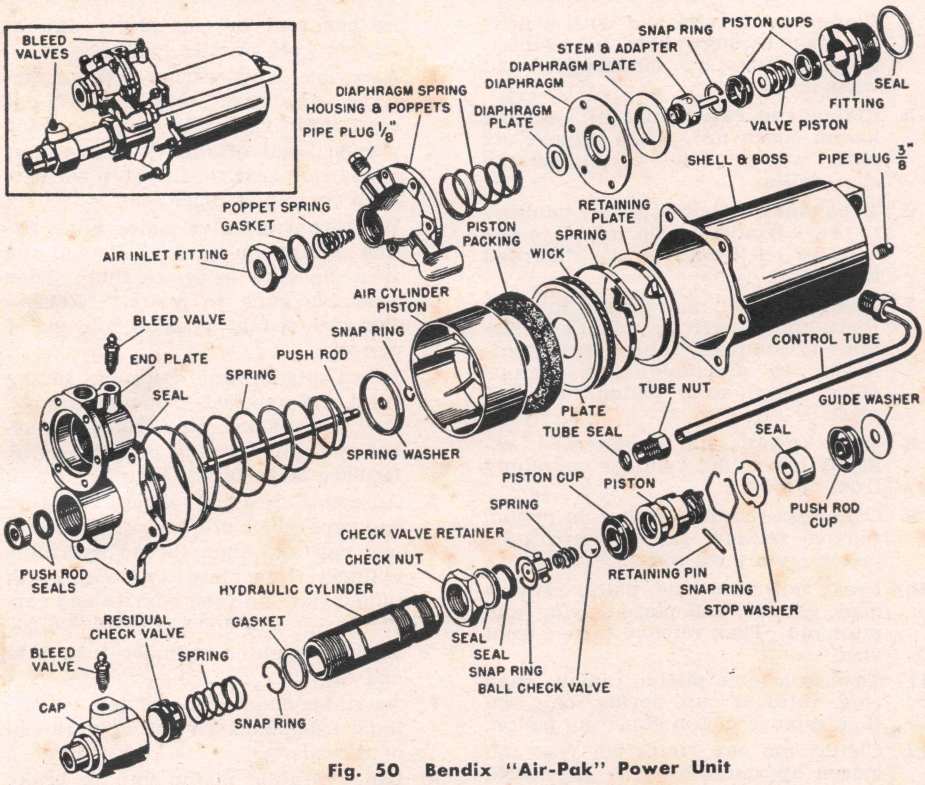

Fig. 50 Bendix "Air-Pak" Power Unit

A tube from the rear side of the vacuum chamber extends to the vacuum control valve and, when the brakes are not applied, there is an open passage through the control valve to the front side of the chamber. Thus, when the brakes are not applied, the two sides of the chamber are directly connected and there is vacuum present on each side of the diaphragm.

A brake tube extends from the regular master cylinder to the vacuum control valve. When the brakes are applied, brake fluid is forced through a passage in the control valve to a space under the control valve diaphragm piston. The pressure then moves the piston against the air intake valve, closing the vacuum passage and opening up an air passage to the rear side of the vacuum chamber.

The difference in pressure on each side of the chamber diaphragm—vacuum on one side and air on the other—forces it toward the slave cylinder.

At the time the brakes are first applied, brake fluid is forced through passages in the control valve and slave cylinder into the space between the two halves of the slave cylinder piston and through a hole in the piston into the slave cylinder and brake lines to the wheel brake cylinders.

As the chamber diaphragm push rod moves into the slave cylinder, it presses the inner half of the piston into the outer half, closing the hole in the piston and trapping the brake fluid in the slave cylinder and brake lines. Then as the chamber diaphragm push rod continues to move the piston, the brakes are applied.

If at any time the booster does not function when the brake pedal is depressed, the brake fluid will simply pass through the hole in the slave cylinder piston and pressure can be applied through the master cylinder the same as if there was no booster on the vehicle.

When the brake pedal is released, a spring forces the vacuum control piston back, closing the air passage and opening the vacuum passage to the rear side of the vacuum chamber. The diaphragm is pushed to the rear end of the chamber by a spring, thus relieving pressure on the slave cylinder piston and releasing the brakes.

Testing for Leakage

1. Depress brake pedal with full pressure and, while holding the pedal in this position, start the engine. The pedal should then move downward. If not, disconnect the manifold-to-booster chamber tube at the booster. Insert a vacuum gauge and reconnect the tube. Start the engine and check the vacuum—which should be 18 to 21 inches. If normal, the difficulty is located in the booster unit.
2. Remove the pipe plug from the rear half of the booster chamber and install a vacuum gauge.
3. With engine running, depress brake pedal with sufficient pressure to show a zero reading on the vacuum gauge. Shut off the engine and hold the pedal in this position for one minute. A kickback of the pedal indicates a vacuum leak. Do not attempt to locate the leak until step No. 4 has been completed.
4. Start the engine to create vacuum in the system. Then stop the engine and observe the vacuum gauge—the drop in vacuum should not be more than one inch per minute. If more than this, a vacuum leak is present.

Leakage in test No. 3 but not in No. 4 indicates that the booster unit itself is at fault. Leakage in tests 3 and 4 may be located in the check valve on dash, vacuum tube connections, or booster unit itself.

Disassembly

1. Remove large nut at end of slave cylinder and remove piston spring and metal cup.
2. Scratch mark both halves of vacuum chamber so that they can be assembled together in their original position.
3. Punch mark flanges of control valve and slave cylinder (marks opposite each other) so that they can be assembled together in their original position.
4. Remove control valve-to-vacuum chamber tube.
5. Remove ring which clamps two halves of vacuum chamber together and remove rear half of vacuum chamber and diaphragm.
6. Remove screws which fasten front half of vacuum chamber to slave cylinder. Remove seal retainer and front half of vacuum chamber.
7. Remove screws holding valve cover to control valve and take off cover. Lift out valve spring and air valve.
8. Remove control valve. Lift off diaphragm spring and diaphragm.
9. Remove rubber piston seal from rear end of slave cylinder.
10. Using the vacuum chamber diaphragm push rod, push slave cylinder piston and rubber piston cup out of front end of cylinder.

Reassembly

Reverse the order of the disassembly procedure to reassemble, being sure to line up the two halves of the vacuum chamber as well as the control valve and slave cylinder according to the marks made prior to disassembly.

The control valve diaphragm and vacuum chamber diaphragm can be installed in any position.

BENDIX AIR-PAK POWER UNIT

The Bendix Air-Pak is a combination compressed air, hydraulic power brake unit for use on vehicles having hydraulic brakes and a source of compressed air for brake operation. The device consists of three basic units, Fig. 50.

1. A compressed air cylinder, which includes an air pressure-operated piston and a push rod.
2. A hydraulic cylinder, which includes a hydraulic piston with a built-in check and a residual check valve at the output end of the cylinder.
3. An air pressure control valve, which includes a hydraulic pressure-operated piston, an air pressure poppet valve, an atmospheric pressure pop-

pet valve, and an air pressure control diaphragm.

Principles of Operation

As the brake pedal is depressed, fluid is displaced under pressure by the master cylinder piston to the hydraulic cylinder and to the hydraulic piston chamber of the control valve of the "Air-Pak". When sufficient pressure develops, the hydraulic piston of the control valve moves, closing off the atmospheric poppet valve and opening the air pressure valve to admit air under pressure to the air pressure side of the "Air-Pak" air cylinder.

The air pressure, acting upon the air cylinder piston, is transmitted through the push rod to the hydraulic cylinder piston, moving the piston in the applied direction. As soon as the piston begins to move, the check valve in the hydraulic piston closes to prevent the return of fluid to the master cylinder.

Any increase in fluid pressure or piston travel is transmitted to the wheel cylinder pistons to actuate the brakes. The hydraulic pressure at the wheel cylinder piston is the sum of the pressure developed by the air power cylinder piston.

A diaphragm in the control valve, which is subject to atmospheric and application air pressure, controls the degree of braking by setting up an opposing force which resists the movement of the control valve hydraulic piston in the applied direction.

With the release of pressure applied to the brake pedal, the hydraulic pressure within the master cylinder and control valve piston cavity decreases, causing the air pressure poppet to close and the atmospheric poppet to reopen. As the atmospheric poppet opens, the pressure on both sides of the air cylinder pistons are again balanced. The return spring then returns the air cylinder and hydraulic cylinder pistons to their released positions.

As the hydraulic cylinder piston approaches its fully released position, the check valve in the hydraulic piston reopens to permit the fluid displaced by the hydraulic piston of the "Air-Pak" to return to the master cylinder, releasing the brakes.

Disassembly

Use extreme care in handling hydraulic system parts to prevent their coming in contact with mineral oil or greases. Do not handle hydraulic piston cups or seals with greasy hands.

1. Loosen control tube nuts and remove control tube and gasket.
2. Scribe marks across end plate and cylinder shell and also across end plate and control valve housing to assure correct reassembly.
3. Remove end plug, gasket and spring from control valve housing. Then remove six capscrews, lift or pry off housing and remove return spring, diaphragm assembly and stop washer.
4. Clamp nut in vise and with a drift inserted through hole in adapter, remove adapter, diaphragm and washer.
5. Clamp end cap firmly in vise and loosen check nut. Then remove six nuts, washers and bolts and the short bolts.
6. Tap cylinder shell with soft hammer to break bond between end plate and cylinder shell and remove shell and air piston.
7. Clamp nut of air piston in vise. Place end of push rod in hole of piston and compress return spring sufficient to assemble hook clamps (5⅜" long) over piston and end plate.
8. With spring held compressed, remove hydraulic cylinder assembly from end plate.
9. Compress retainer spring on piston, remove retainer pin and hydraulic piston from push rod.
10. Press down on end plate, remove hook clamps, end plate, spring and push rod. Then remove piston from vise.
11. To disassemble piston, remove snap ring, retainer cup, spring, ball and then remove piston cup from piston.
12. Clamp end cap rigidly in vise and loosen hydraulic cylinder tube with an open end wrench. Then remove check nut seal, check nut, hydraulic cylinder tube and copper gasket.
13. To dismantle the residual check valve, remove snap ring, stop washer, return spring, residual check valve and bleed screw.
14. Loosen control valve piston fitting with a suitable offset wrench. Then remove lock ring, fitting and gasket.
15. Remove hydraulic tube seal, snap ring, stop washer, seal retainer, push rod cup and stop washer.
16. Remove push rod leather seal and gasket.
17. To remove seal, thread a ¼" pipe top into seal and drive seal out from opposite end.
18. Press out control valve piston from fitting and remove cups from piston.

Cleaning & Inspection

Clean all metal parts except the control valve housing and poppets in an approved parts cleaner. After cleaning, wash all hydraulic system parts in clean alcohol before assembly. When overhauling an "Air-Pak", always use a repair kit.

Inspect all parts for excessive wear or damage. If the bore of the air cylinder shell is corroded or rusted, polish with fine emery cloth or steel wool. When cylinder shell is badly scored or pitted, it should be replaced.

Inspect the condition of poppets and seat in control valve housing. If either are damaged, replace the control valve housing and poppets assembly.

Reassembly

1. Assemble new rubber gasket and leather seal in end plate. Lip of leather goes next to gasket.
2. Assemble stop washer with chamfered side next to seal; push-rod cup, with flat side next to stop washer; seal retainer with counterboard side next to cup; stop washer; snap ring and rubber seal.
3. Wash control valve piston cups, fitting and piston in clean alcohol and then dip cups in brake fluid. Then assemble cups on piston. **NOTE**—Cut with red dot goes on hole end of piston.
4. Insert piston and cups in fitting from end opposite lock ring groove. Use new gasket on fitting and securely tighten fitting into end plate. Replace lock ring in fitting.
5. Assemble residual check valve in end cap. Place new copper gasket in end cap and then thread hydraulic cylinder tube into end cap with milled flats on tube next to end cap.
6. With end cap held firmly in vise, securely tighten cylinder tube into end cap.
7. Assemble check nut and seal on cylinder tube and turn nut down to end of threads.
8. Dip hydraulic piston cup in brake fluid and assemble cup into piston with lip of cup toward check valve.
9. Clamp air piston nut firmly in vise and insert lock ring end of push rod in hole of piston.
10. Assemble retaining washer on push rod with cup side up and assemble return spring with small diameter end next to retainer washer.
11. Guide end plate over push rod, compress return spring and hold spring compressed with the hook clamps used for disassembly.
12. Compress retainer pin spring on piston and attach piston to push rod with retainer pin. Make certain pin is held in position by spring.
13. Carefully guide hydraulic cylinder over lip of piston cup and thread cylinder into end plate (hand tight only).
14. Compress return spring and remove hook clamps.
15. Saturate air piston leather and cotton wicking in Bendix Vacuum Cylinder oil. Allow excess oil to drain off. Also apply a light coating of oil to inside of cylinder shell.
16. Install new end plate gasket in groove of end plate. Place piston on end of push rod.
17. Assemble air cylinder over piston and align to scribe marks. Attach air cylinder to end plate. Tighten each bolt evenly until all bolts are uniformly tight.
18. With check nut loose, adjust length of hydraulic cylinder to the following dimensions, measuring from extreme end of end cap to end plate:

Part No.	Dimension*
375440	7½"
375756	7½"
375757	10¼"
375817	7½"
375844	10¼"
375901	7½"

*Plus or minus ⅛".

19. Assemble nut, washer, diaphragm and adapter (flat side of washer goes next to nut, concave side of diaphragm goes next to washer). Hold nut in vise and securely tighten adapter.
20. Thread two guide pins into end plate (make from ¼-20 screw, 2½" long). Place stop washer in recess of end plate (flat side out) and assemble diaphragm, return spring and control valve housing, with housing aligned to scribe marks.
21. Assemble capscrews and lockwashers. Tighten screws uniformly.
22. Place new gasket on fitting. Assemble small end of spring over end of air poppet and thread fitting into end plate and tighten fitting.
23. Place new gasket on air control tube and attach tube to control valve and air cylinder, securely tightening nuts.

Lubrication

Do not lubricate "Air-Pak" until it has been permanently installed on the vehicle. This is a safeguard against lubricating oil entering the hydraulic section of the "Air-Pak" which might cause damage to the rubber cups and seals.

The "Air-Pak" should be lubricated every 10,000 miles or every six months, whichever occurs first, with Bendix Vacuum cylinder oil.

To lubricate the "Air-Pak", remove the ⅛" pipe plug from the air cylinder shell and inject the oil through the fitting up to the point where the oil begins to run out of the port. Replace and tighten the plug.

During lubrication, the engine should be shut off and the "Air-Pak" should be in the released position.

POWER BRAKE TROUBLE DIAGNOSIS

Hard Pedal

1. Vacuum failure due to faulty vacuum check valve, collapsed vacuum hose, or plugged vacuum fittings.
2. Bound-up pedal shaft.
3. Glazed linings.
4. Grease on linings.
5. Power cylinder troubles.

Grabby Brakes

1. Grease on linings.
2. Scored brake drums.
3. Anchor pins bound-up.
4. Power cylinder valve trouble.

Pedal Goes to Floor

1. Brakes need adjustment.
2. Air in hydraulic system.
3. Hydraulic leak.
4. Low master cylinder fluid level.
5. Cracked brake drum.
6. Power cylinder leakage.

Brakes Fail to Release

1. Master cylinder compensating port covered or plugged.
2. Anchor pins bound-up.
3. Bound-up brake pedal shaft.
4. Faulty hydraulic check valve (at master or power cylinder).
5. Brakes improperly adjusted.
6. Power cylinder valve or ball check trouble.

ALLISON AUTOMATIC TRANSMISSION

CONTENTS

PAGE NO.

Description 281
Driving Instructions 282
Trouble Shooting 283
Oil Pressure Checks 285
Air Pressure Checks 285

Maintenance

Adding Fluid 286
Changing Fluid 286
Linkage Adjustments ..... *

Transmission Repairs

"In Truck" Repairs 286
Transmission, Replace ..... *
Transmission, Disassemble 287
Transmission, Assemble 288

Sub-Assemblies, Overhaul

Converter Pump Cover and Lockup Clutch 291
Converter Pump 291
Converter Stators 291
Converter Housing and Front Pump 293
Splitter Mechanism, High Clutch and PTO Drive Gear 293
Transmission Rear Sub-Assemblies 294
Hydraulic Control Valve 297

*See Truck Chapters

DESCRIPTION

This transmission, Fig. 1, called Powermatic by Chevrolet and Transmatic Drive by Ford, and Torqmatic by Dodge, is a hydraulically-operated automatic transmission with six forward gear ratios and one reverse ratio. It is made in two versions, a lighter unit for medium duty trucks and a heavier one for heavy duty trucks. The two models differ chiefly in the hydraulic control system.

The transmission consists basically of a torque converter, a planetary gear train and a hydraulic control system for shifting gears.

The torque converter operates as a hydraulic torque multiplier and a fluid coupling between the truck's engine and the gear train. The torque multiplying phase of the converter operates when the truck starts moving from a standstill and when a heavy load slows down the truck. When no torque multiplication is needed, the fluid coupling phase starts operating automatically.

If the truck should slow down and the converter turbine resists turning, such as when climbing hills or driving in stop-and-go traffic, the converter operation automatically changes from a fluid coupling phase to a torque multiplication phase. This phase occurs after the gears have shifted into third gear ratio (when driving in Drive or Intermediate ranges) or first gear ratio (when in Low range).

At certain engine speeds when the action of the torque converter is no longer needed, an automatic lockup clutch in the converter locks the engine directly to the gear train for greater efficiency, Fig. 2. The hydraulic system which operates the lockup clutch automatically disengages the clutch each time an automatic or manual upshift or downshift is being made.

A pedal-operated hydraulic retarder in the transmission assists the service brakes in controlling the truck's speed during long downhill braking or when slowing down in stop-and-go traffic. When the retarder pedal is depressed and the retarder valve opens, transmission fluid flows into the retarder cavity located between the converter and transmission housings. The cavity contains a rotor, which is connected to the turbine output shaft, and stationary reaction vanes on both sides of the rotor. When the fluid fills the cavity, it churns against the reaction vanes and slows down the rotor. The retarding effort is transmitted to the drive line and slows down the truck.

The retarder will continue to operate as long as the retarder pedal is depressed. However, heat is generated in the fluid by the retarder action, and the fluid

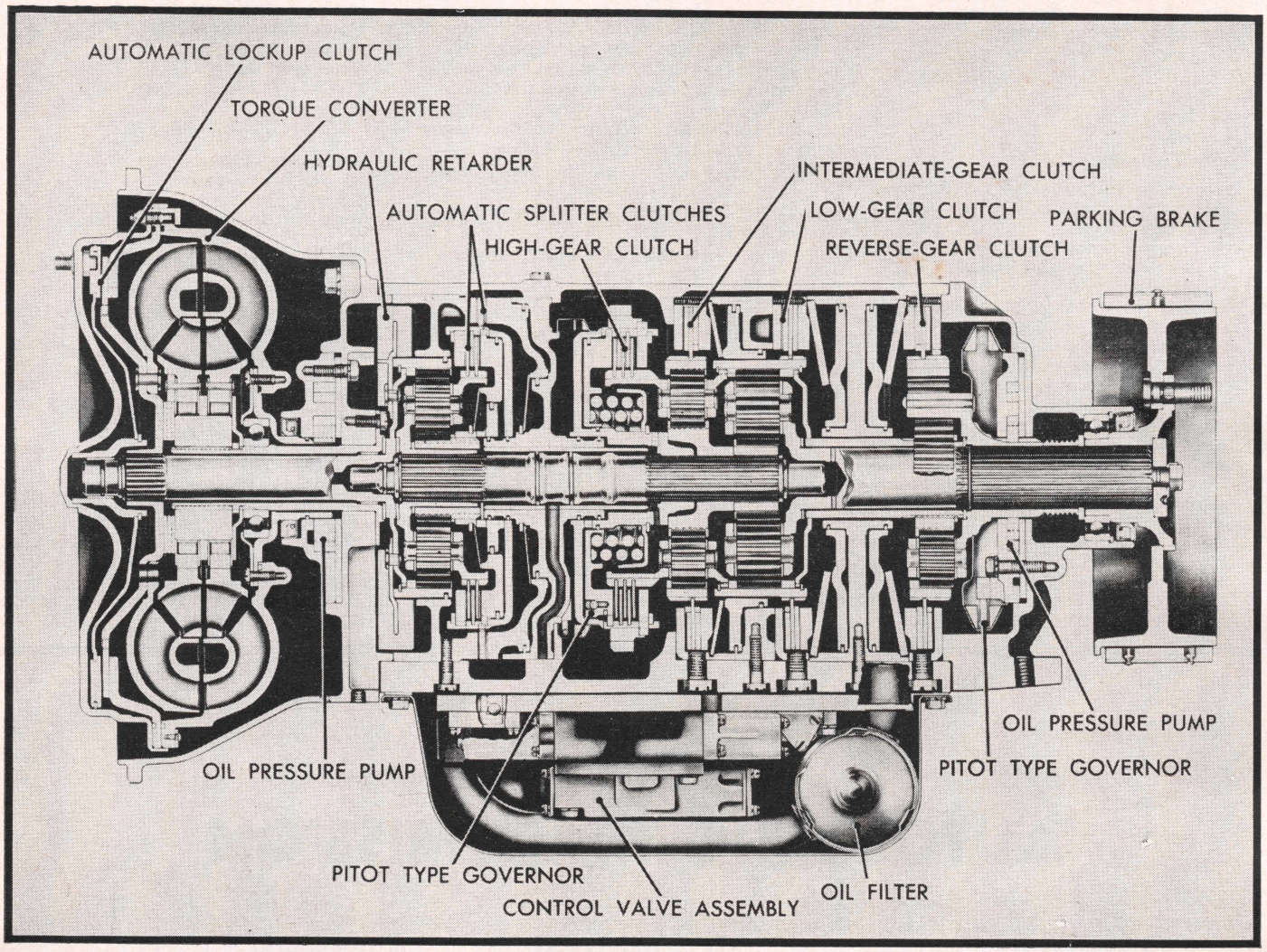

Fig. 1 Sectional view of Allison six-speed automatic transmission

temperature may rise faster than it can be cooled if the retarder is operated continuously. A warning light on the instrument panel indicates that the retarder operation should be discontinued until the fluid cools and the warning light goes out. When the pedal is released and the retarder valve closes, the fluid in the cavity automatically discharges and permits the rotor to turn without drag.

The transmission gear train contains four sets of constant-mesh planetary gears which are operated by hydraulically-actuated clutches. All forward gear shifts, except the upshift and downshift between second and third gear ratios, are fully automatic and are controlled, through a system of hydraulic valves, by throttle position and truck speed.

The four planetaries are arranged in series to permit one of them to become a "splitter" for the others. The splitter planetary, located between the torque converter and the range gears, has two ratios that are used when the low, intermediate or high clutch is applied. A reduction ratio, or low splitter, operates in neutral, first, third, fifth and reverse gears. A direct drive ratio, or high splitter, is used in second, fourth and sixth gears.

Two separate fluid-velocity governors in the transmission provide the fluid pressures needed to operate the hydraulic control system and make the shifts.

Two regular duty power take-off openings are located at the sides of the transmission housing.

DRIVING INSTRUCTIONS

The manual controls needed to operate the transmission are a range selector lever, an accelerator pedal, and a pedal for the hydraulic retarder.

A neutral position (N), three forward speed positions (Dr, Int and Lo) are provided for the range selector lever to control the various automatic gear ratio shifts in the transmission.

The selector lever must be at N to start the engine. When the lever is at Dr, the transmission can be operated in 3rd, 4th, 5th and 6th gear ratios. The Int (intermediate range) position permits the use of only 3rd and 4th gear ratios. When the lever is in Lo (low range) the transmission will operate only in 1st and 2nd gear ratios. The reverse gear ratio can be used when the selector lever is at R.

When the truck is moving forward, the selector lever can be moved from one forward speed to another to obtain gear ratios in the other ranges. However, the lever should not be moved from Dr to Int when the truck is moving faster than 30 mph, or from Dr or Int to Lo at speeds faster than 15 mph. *Do not move the lever between ranges when the hydraulic retarder is operating. The truck should always be completely stopped when shifting the selector lever from Dr, Int or Lo to R. Severe damage to the transmission may result from shifting the selector lever at road speeds faster than those specified for the shifts.*

The gear ratios within the selected range are upshifted or downshifted automatically to meet changing road and load conditions. When the accelerator is depressed to provide maximum or full throttle, each gear ratio shift point should occur at the highest speed for the shift. When the throttle is partly open, the shift points should occur at lower speeds.

A detent at full-throttle position of

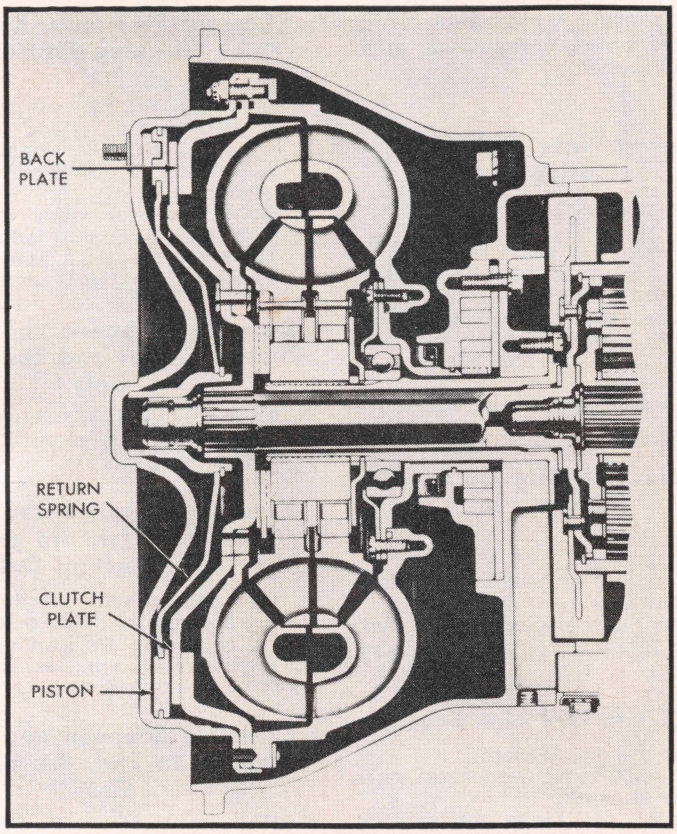

Fig. 2 Lockup clutch

the accelerator pedal permits the driver to control certain shifts. When the pedal is pushed through the full-throttle detent, the transmission will remain in the same gear ratio during acceleration or will immediately downshift to a lower gear ratio to provide the best engine performance for the driving conditions. The transmission cannot upshift when the accelerator is pushed through the full-throttle detent. The pedal must be released until it comes back through the full-throttle detent to obtain an upshift.

Driving On Glare Ice

To start the truck moving from a standstill on glare ice when traction is poor, place the selector lever at Dr or Int and depress the accelerator pedal as lightly as possible to avoid spinning the wheels. *Do not downshift to Lo.*

"Rocking" Out of Deep Ruts

To "rock" the truck out of deep ruts, move the selector lever back and forth between Lo and R while keeping the engine running at a steady speed. Time the movement of the lever to take advantage of the "rocking" momentum of the truck.

Pushing or Towing To Start The Engine

If the truck has to be pushed or towed to start the engine, place the selector lever at N and turn on the ignition switch. When the truck's speed reaches about 25 mph, move the selector lever to Dr and hold the accelerator pedal about halfway down. If the truck is being towed, be careful not to run into the towing truck when the engine starts.

Towing The Truck

To tow a truck when the transmission is not functioning properly, raise the rear wheels off the ground or disconnect the drive shaft.

When the transmission is functioning properly but has not been driven more than 1000 miles, or when mechanical trouble exists elsewhere in the truck, place the selector lever at N and maintain a towing speed between 15 and 35 mph. Check the transmission fluid level after each three miles of towing, and add fluid if the level falls more than ¼" below the full mark.

Operating The Hydraulic Retarder

The hydraulic retarder is not a substitute for the service brakes but is designed only to slow down the truck. It assists the brakes and relieves them from excessive use and wear during long downhill braking and when slowing down in stop-and-go traffic.

To slow down the truck, push down and hold the hydraulic retarder pedal. The retarder operates most effectively in the intermediate and low ranges at engine speeds of 2800-3500 rpm.

Trouble Shooting & Maintenance

TROUBLE SHOOTING

Shift Points High on 1st and 2nd and all Lockup Shifts

1. G-1 Pressure insufficient.
2. Lube pressure low.
3. Anchor bolts holding diaphragm in housing loose.
4. G-1 circuit leakage.
5. Front fluid velocity governor damaged.
6. Front pitot tube loose or damaged.

Lockup Shift Points High and Transmission Won't Shift to 2nd Gear

1. G-1 pressure insufficient.
2. Lube pressure low.
3. G-1 circuit leakage.
4. Lockup shift valve sticking.
5. Anchor bolts holding high range clutch diaphragm in housing loose.
6. Front fluid velocity governor damaged.
7. Front pitot tube loose or damaged.

Low-Main Pressure In All Ranges

1. Air leak at oil transfer tubes or seals in oil pan.
2. Oil filter element clogged.
3. Main pressure regulator valve primary and secondary springs weak or improper.
4. TV pressure low at full throttle; normal at closed throttle.
5. TV spring weak or broken.
6. Range selector valve body leakage.
7. Oil transfer plate gasket blown or damaged.
8. Rear pump ball not in range selector valve body.
9. Valves sticking.
10. Front pump worn or damaged.

Low Main Pressure In Low Range

1. Low range circuit of range selector valve body leaking.
2. Leakage between low range piston housing and transmission housing.
3. Excessive leakage at low range piston seals.
4. Gasket at oil transfer plate leaking.

Misses 2nd Gear On Downshift to Low Range

1. Shifting manually at too low vehicle speed.
2. G-1 pressure insufficient.
3. Rear oil pump malfunctioning.

Transmission Will Not Shift to 4th Gear In Int or Dr Ranges

1. G-2 pressure insufficient.
2. Rear pitot tube loose.
3. Rear pitot (G-2) splitter plug sticking.
4. Rear fluid velocity governor damaged.
5. Rear oil pump malfunction or orifice in pump housing clogged.
6. Rear pitot tube damaged or improperly installed.

All Shift Points Too Low At Full Throttle

1. TV pressure low at full throttle.
2. Throttle valve spring weak or broken.
3. Main pressure leaking into governor circuit.

All Shift Points Too High Except Lockup and 1st and 2nd Shift At Part Throttle

1. G-2 pressure insufficient.
2. Rear pitot tube loose.
3. Rear fluid velocity governor damaged.
4. Rear pitot tube damaged.

Buzzing Noise Occurring Intermittently

1. Low oil level.
2. Oil filter element clogged.
3. Air leak at oil transfer tubes or seals in oil pan.

Insufficient G-2 Pressure

1. Rear pitot tube loose.
2. Rear fluid velocity governor damaged.
3. Rear pitot tube damaged or improperly installed.
4. Rear oil pump malfunction.
5. Oil transfer plate gasket blown or damaged.

Insufficient G-1 Pressure

1. Lube pressure low.
2. G-1 circuit leak or obstruction.
3. Anchor bolts holding high range clutch diaphragm in housing loose.
4. Front fluid velocity governor damaged.
5. Front pitot tube damaged or loose.

Low Lube Pressure

1. Oil lines restricted.
2. Cooler lines or fittings leaking.
3. Lube regulator valve ball or spring in hydraulic retarder control valve body faulty.
4. Oil filter element clogged.
5. Pump overage regulator malfunction.
6. Front oil pump malfunction.
7. Converter pressure regulator valve ball malfunction.
8. Oil level low.

Oil Leakage Into Converter Housing

1. Engine crankshaft rear oil seal leaking.
2. Torque converter seals leaking.
3. Front oil pump lip-type seal faulty or seal drain restricted.
4. Hook-type seal ring on converter pump hub broken.
5. Drive studs in converter pump cover loose.
6. O-type seal ring at front oil pump leaking.

Transmission Heating Up In All Ranges

1. Oil level low.
2. Oil level high.
3. Engine cooling system malfunction.
4. Oil cooler lines restricted.
5. Hydraulic retarder partially applied.
6. Bushing in converter ground sleeve worn.

Lockup Clutch Will Not Engage

1. G-1 pressure insufficient.
2. Lockup shift valve or lockup cutoff valve sticking.
3. Hook-type seal rings on splitter shaft or turbine shaft broken.
4. Lockup clutch piston seal ring leaking.
5. Excessive internal leakage.

No Response to Movement of Shift Lever

1. Oil filter clogged.
2. Oil level low.
3. Range selector linkage defective.
4. Main pressure low.
5. Low splitter clutch failure.
6. Clutch piston seals leaking.

High Stall Speed

1. Oil level low.
2. Clutch pressure low.
3. Converter pressure low.
4. Range clutches failure.
5. Low splitter clutch failure.

Low Stall Speed

1. Engine not performing efficiently.
2. Converter stators functioning improperly due to improper assembly or failure of components.

Rough Shifting

1. Manual selector linkage out of adjustment.
2. Throttle valve linkage out of adjustment.
3. Valves sticking.

Engine Overspeeds On Full Throttle Shift Out of Low Range

1. Downshift timing valve sticking.
2. Seals on intermediate range clutch piston excessively worn.

Loss of Hydraulic Retarder Braking Effect

1. Oil level low.
2. Hydraulic retarder valve linkage out of adjustment.
3. Oil filter element clogged.
4. Air leaks at oil transfer tubes or seals in oil pan.
5. Lube regulator valve in hydraulic retarder valve body failure.
6. Hook-type seal ring on outside diameter of splitter ring gear faulty.

Excessive Slippage and Clutch Chatter In 1st and 2nd Lockup Only

1. Low range clutch failure.
2. Excessive leakage of low range clutch piston seals.

Excessive Slippage and Clutch Chatter In 1st, 3rd and 5th Gear Lockup Only

1. Low splitter clutch failure.
2. Anchor bolts holding high range clutch diaphragm in housing loose.
3. Excessive leaking of low splitter clutch piston seals.

Excessive Slippage and Clutch Chatter in 2nd, 4th and 6th Gear

1. High splitter clutch slipping.
2. Anchor bolts holding high range clutch diaphragm in housing loose.
3. Excessive leaking of high splitter clutch piston seals.

Excessive Slippage In 3rd and 4th Gear Lockup Only

1. Intermediate range clutch failure.
2. Intermediate range clutch piston seals leaking excessively.

Dirty Oil

1. Failure to change at specified interval.
2. Oil filter element faulty.
3. Excessive heat.
4. Clutch failure.

Slippage In 5th and 6th Gear Lockup Only

1. High range clutch slippage.
2. High range clutch piston seals leaking excessively.

Slippage In All Gears

1. Oil level low.
2. Clutch pressure low.
3. Lockup clutch slipping.

Excessive Slippage In Reverse Range Lockup Only

1. Reverse range clutch failure.
2. Reverse range clutch piston seals leaking excessively.

Vehicle Moves Forward In Neutral

1. Range selector linkage out of adjustment.
2. Range clutch failure or dragging.

3. Insufficient range clutch clearances.

Vehicle Moves Backward In Neutral

1. Range selector linkage out of adjustment.
2. Reverse range clutch failure or dragging.

Vehicle Will Not Push Start

1. Engine trouble.
2. Oil level low.
3. Rear oil pump malfunction.
4. Also refer to troubles concerning excessive clutch slippage and failure of vehicle to move when engine is running and selector is shifted to forward ranges.

Throws Oil Out of Transmission Filler Tube

1. Dipstick loose.
2. Breather line clogged, disconnected or pinched.
3. Oil level too high.

Oil Leak At Rear Bearing Retainer

1. Bearing retainer bolts loose.
2. Retainer gasket blown.
3. Gasket of improper thickness installed.

OIL PRESSURE CHECKS

Plugged holes are provided for checking oil pressures, Fig. 3. These plugs can be removed for the installation of oil pressure gauges.

CAUTION—*Do not install any gauges while the engine is running. By using these oil pressure check points, abnormal oil pressures that will cause malfunction of the hydraulic-controlled components can be found. The following data applies to the medium duty unit. Full throttle pressures for the heavy duty unit are 10% higher.*

Gear	*Operation*	*P.S.I.**
1st	Converter	
	closed throttle	185
	full throttle	220
	Lockup	
	closed throttle	70
	full throttle	82
2nd	Lockup	
	closed throttle	70
	full throttle	82
3rd	Converter	
	closed throttle	185
	full throttle	220
	Lockup	
	closed throttle	85
	full throttle	100
4th	Lockup	
	closed throttle	70
	full throttle	82
5th	Lockup	
	closed throttle	70
	full throttle	82
6th	Lockup	
	closed throttle	70
	full throttle	82
Reverse	Converter	
	closed throttle	185
	full throttle	220
	Lockup	
	closed throttle	70
	full throttle	82

*The above data are for medium duty units; full throttle operation on heavy duty units are 10% higher.

AIR PRESSURE CHECKS

Compressed air may be used to check the operation of the various clutches in the transmission and to find leaks that may be caused by broken, damaged or omitted seals.

To make the air pressure checks, remove the oil pan, valve body and oil transfer plate from the transmission. Then apply 80-100 lbs. (psi) air pressure at the appropriate holes in the mounting pad at the bottom of the transmission housing, Figs. 3 and 4.

When compressed air is applied as directed, listen for the noise that occurs when the clutch is applied. If no clutch application noise is heard, a leak may exist in the hydraulic system. Refer to the fluid leakage data below to determine the cause of the leaks at any of the check points.

Low Splitter Clutch

1. Leak between diaphragm and case:—Bottom two anchor bolts loose or not drawing diaphragm to case.

High Splitter Clutch

1. Leak between diaphragm and case:—Bottom two anchor bolts loose or not drawing diaphragm to case.
2. Leak at piston I.D.: — Broken or omitted hook-type oil seal.
3. Leak at piston O.D.: — Broken, nicked or omitted synthetic seal.
4. Air comes out of lube hole in retarder valve body pad:—Front hub hook-type seal ring broken or omitted.
5. Air comes out of retarder feed:—Rear hub hook-type seal ring broken or omitted.

High Range Clutch

1. Leak between diaphragm and case:—Bottom two anchor bolts loose or not drawing diaphragm to case.
2. Air escapes at front pitot hole (8) or at lube hole in retarder valve body pad:—Inner hook-type seal ring on rear hub broken or omitted.
3. Air escapes at lube hole in retarder valve body pad:—Rear hook-type seal ring on rear hub broken or omitted.
4. Air may escape around clutch piston spring:—Hook-type seal ring for clutch I.D. broken or omitted.
5. Air may escape around high range clutch hub:—Synthetic seal at piston O.D. broken, nicked or omitted.

Intermediate Range Clutch

1. Leak between case and intermediate clutch piston housing:—Anchor bolts loose. Intermediate clutch housing not tight against hole in case.
2. Leak at piston I.D.: — Hook-type ring broken or omitted.
3. Air escapes around low range clutch plate:—Hook-type ring broken or omitted.
4. Leak at piston O.D.:—Synthetic seal at piston O.D. broken, nicked or omitted.

Low Range Clutch

1. Leak between case and low-reverse piston housing:—Anchor bolt loose. Low-reverse clutch housing not tight against case.
2. Leak at piston I.D.:—Hook-type seal broken or omitted.
3. Air escapes around clutch I.D.:—Hook-type seal broken or omitted.
4. Leak at piston O.D.:—Synthetic seal broken, nicked or omitted.

Reverse Clutch

1. Leak between case and low-reverse

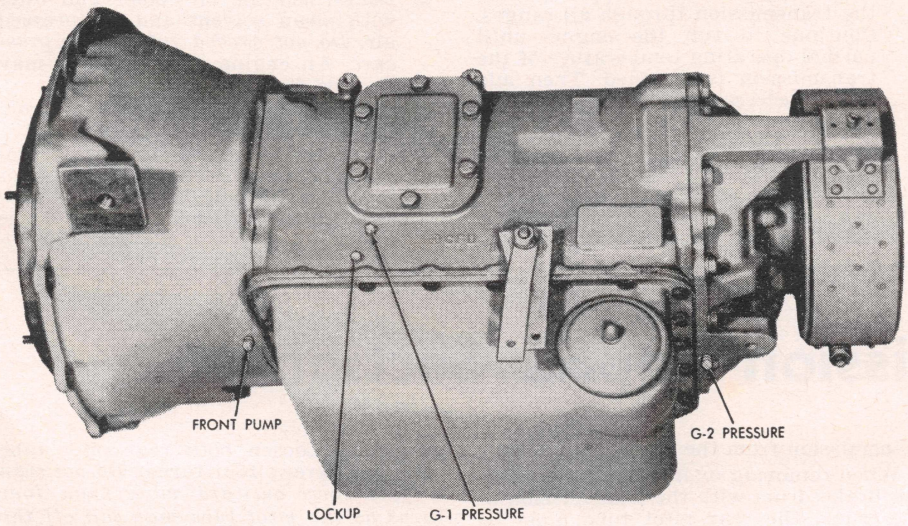

Fig. 3 Pressure check point locations

piston housing:—Anchor bolt loose. Low-reverse clutch housing not tight against case.
2. Leak at piston I.D.:—Hook-type seal broken or omitted.
3. Air escapes around clutch I.D.:—Hook-type seal broken or omitted.
4. Leak at piston O.D.:—Synthetic seal broken, nicked or omitted.

Lockup Clutch

1. Leak at piston I.D.:—Synthetic seal broken, nicked or omitted.
2. Leak at O.D. of converter cover:—Synthetic seal between reaction plate and cover, or between plate and converter pump flange damaged or omitted.
3. Leak at turbine shaft:—Broken or omitted hook-type rings at front end of turbine shaft, front end of splitter shaft, or center of splitter shaft.

MAINTENANCE

Adding Fluid

The oil level should be checked every 1000 miles and oil added as necessary as outlined below:

1. Transmission oil should be at normal operating temperature of 150 to 200°.
2. Apply hand brake and service brakes securely. *Do not apply the hydraulic retarder while checking the oil level.* Applying the hydraulic retarder while in a stalled condition will aerate the oil, making an accurate oil level check impossible.
3. Place range selector lever in Dr range and run engine at normal idle speed.
4. Before removing dipstick clean the area around the dipstick opening as a precaution against dirt entering transmission.
5. The oil level should be at the "Full" mark on the dipstick. If the oil level it at the "Add" mark, or below it, add enough oil to bring the level up to the "Full" mark. If the oil level is higher than the level specified above, drain the oil back to the correct level.
6. Securely seat the dipstick in the filler tube.

Changing Fluid

The oil should be changed every 5000 miles under normal operating conditions for off-highway or urban operation. The oil should be changed at 10,000 mile intervals for normal highway operation. Replace the oil filter at each change.

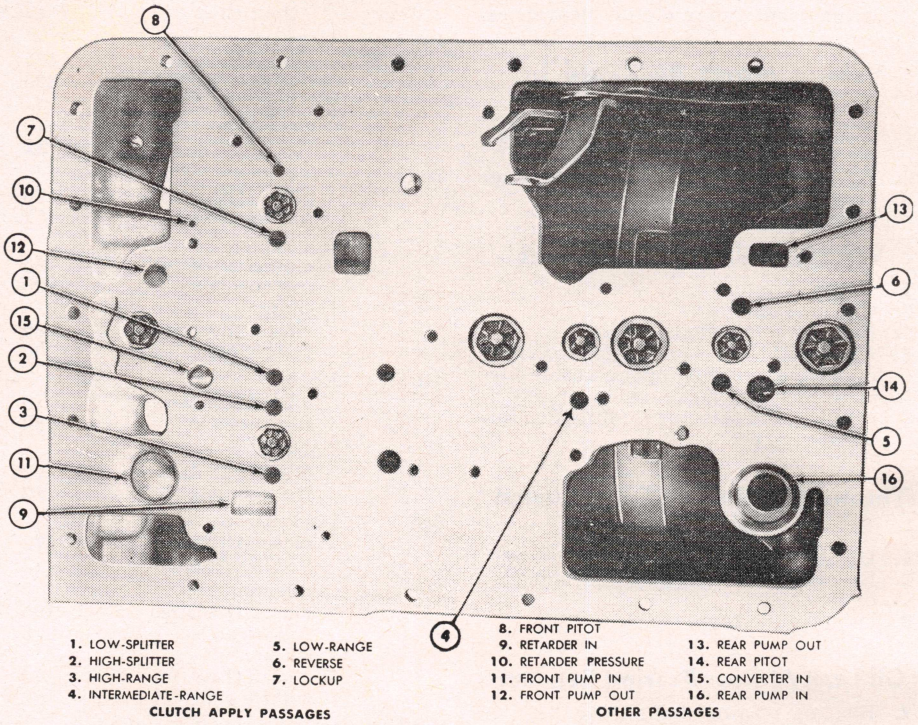

Fig. 4 Transmission housing fluid passage holes

1. Drain oil immediately after operation while the oil is still warm.
2. Loosen the transmission oil filter cover and allow oil to drain thoroughly. Do not completely remove the cover until drainage is complete.
3. Remove cover and filter and install new filter.
4. Pour eight quarts of Hydraulic Transmission Fluid "Type A" or Automatic Transmission Fluid "Type C" into the transmission.
5. Apply parking brake and position range selector in N and start engine.
6. Move range selector lever to Dr.
7. Run engine at normal idle speed and add sufficient oil to bring the level up to the "Add" oil mark on the dipstick.
8. With service brakes applied, shift the transmission through all ranges. Continue to run the engine until normal operating temperature of the transmission is attained. Then add oil, if necessary, to bring the level up to the "Full" mark.

Oil Cooler

The oil cooler (heat exchanger), through which the transmission oil is circulated before returning to the oil pan, dissipates the heat created by normal operation of the torque converter, transmission and hydraulic retarder. The cooling medium is the engine coolant.

When a clutch failure or other internal trouble has occurred in the transmission, any metal particles or clutch plate material that may have been carried into the oil cooler should be removed from the system by flushing the cooler before the transmission is put back into service. Foreign matter in the oil cooler could block off the front pitot feed hole, get into various gears and clutches, or block off the output shaft bushing lubrication orifice in the splitter shaft.

1. Disconnect both oil cooler lines at the fittings in the hydraulic retarder valve body.
2. Back-flush the oil cooler and lines with clean solvent and compressed air. *Do not exceed 100 psi air pressure.* An engine de-sludge gun may be used for flushing.
3. Remove all remaining solvent from the system with compressed air.
4. Flush the system again with Automatic Transmission Fluid. If, after the final flushing, there is no flow through the cooler, or if the flow is restricted, replace the radiator.

Transmission Repair Section

"IN TRUCK" REPAIRS

Servicing the fluid filter, oil pan, valve body, oil transfer plate and hand brake may be performed without removing the transmission from the truck.

When removing or installing the parking brake drum with the transmission in the truck, the rear pitot tube must be loosened to prevent damage to the rear governor. Loosen both rear pitot tube retaining screws four turns. *Do not turn these screws outward more than four turns as the pitot tube may fall off the screws.* Be sure that the screws and

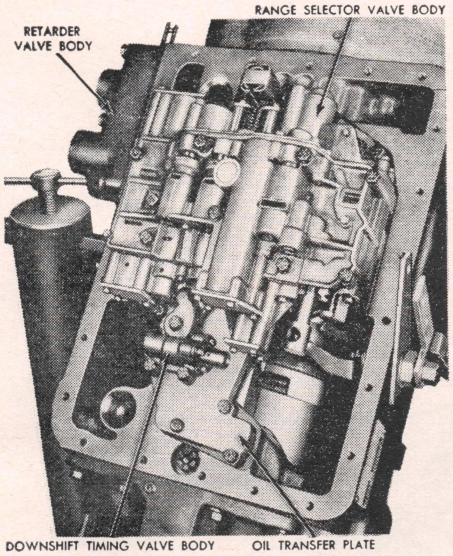

Fig. 5 Valve body and oil transfer plate

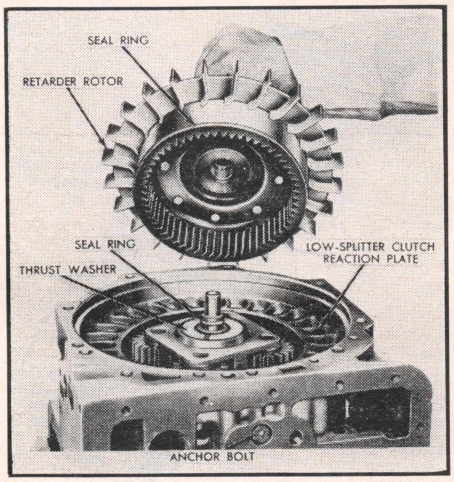

Fig. 6 Hydraulic retarder rotor

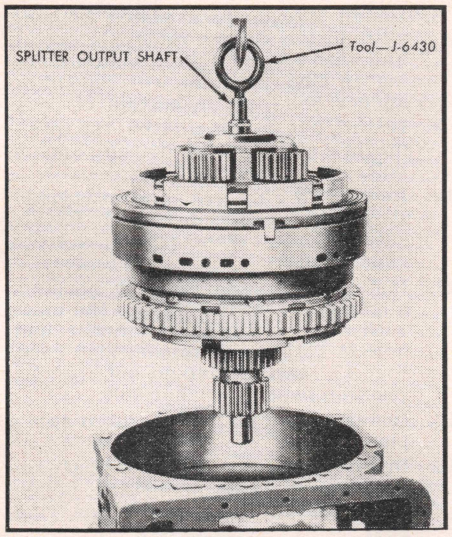

Fig. 7 Splitter mechanism

pitot tube are not binding or sticking on the housing.

TRANSMISSION, DISASSEMBLE

After removing the transmission from the truck, mount the transmission in a suitable repair stand and disassemble as follows:

1. Remove fluid filter.
2. Remove oil pan.
3. Remove range selector valve body, Fig. 5. *The shift valve steel detent ball and spring and the rear pump nylon ball are free to fall out of the valve body when it is removed from transfer plate.*
4. Remove downshift timing valve body.
5. Remove oil transfer plate. *A nylon ball in the plate is free to fall when the plate is removed.*
6. Remove hydraulic retarder valve body. *Remove nylon ball from housing.*
7. Remove converter pump cover, lock-up clutch back plate and clutch plate.
8. Remove hook-type seal and snap ring from turbine shaft and then remove turbine.
9. Remove first stator. *Each stator contains eight springs and eight rollers which may fall out when stator is removed.* Remove bronze spacing washer.
10. Remove second stator and roller race.
11. Remove snap ring and spacer from converter ground sleeve, then lift out converter pump.
12. Lift off converter housing, being careful to avoid dropping the retarder rotor and shaft. *If this assembly lifts with the housing, tap the end of the shaft to dislodge it from the housing so it will remain in the transmission.*
13. Remove thrust washer from rear face of converter ground sleeve.
14. Lift out retarder rotor and shaft, Fig. 6.
15. Loosen bolt at top of transmission housing which anchors diaphragm in housing.
16. Remove low spitter clutch reaction plate, Fig. 6.
17. Remove splitter mechanism, Fig. 7.
18. Remove parking brake band.
19. Remove speedometer driven gear fitting from rear bearing retainer.
20. Remove two rear pitot tube mounting bolts (near brake anchor). *These bolts must be removed to allow the pitot tube to drop into the rear pitot collector ring before loosening the output flange retaining bolt and bearing retainer bolts to prevent damage to governor valves.*
21. Remove parking brake drum, Fig. 8.
22. Remove rear bearing retainer and rear pump. *Do not remove the reverse planetary carrier and rear pitot collector ring with the retainer; be sure they remain on the output shaft.*
23. Remove rear pitot tube from collector ring.

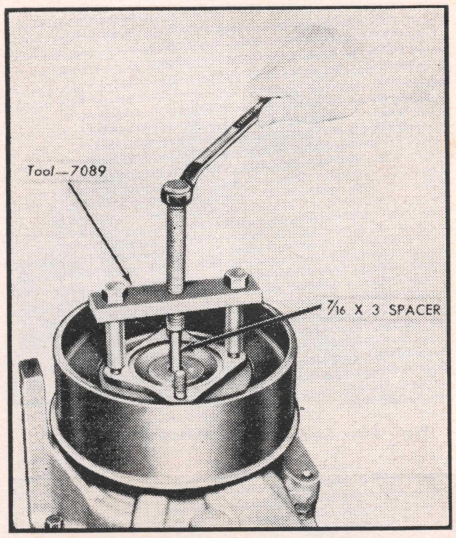

Fig. 8 Brake drum removal

24. Remove reverse planetary carrier and rear pitot collector ring from output shaft. *Various clutch parts are color coded, and should be assembled in the same locations when the transmission is serviced to insure proper fitting.*
25. Remove reverse sun gear after removing thrust washer and snap ring.
26. Remove reverse clutch pressure plate and backing plate, and Belleville spring.
27. Working through openings in transmission housing, remove low range and reverse clutch piston housing, Fig. 9.
28. Remove low range clutch Belleville spring.
29. Remove reverse range sun gear shaft after removing snap ring.
30. Remove thrust washer and take out output shaft assembly.
31. Remove low clutch apply plate and low clutch plate.
32. Remove low clutch reaction housing after removing anchor bolt, Fig. 10.
33. Remove low ring gear and intermediate planetary carrier, Fig. 11.
34. Remove intermediate clutch piston housing after removing anchor bolt, Fig. 11.

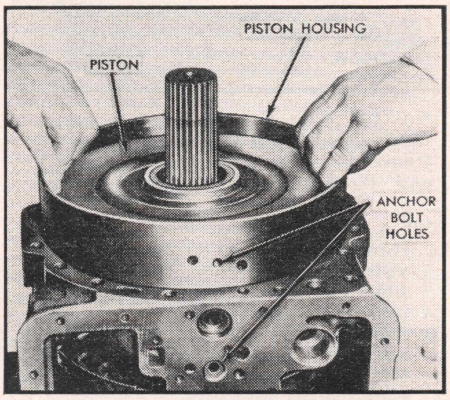

Fig. 9 Low and reverse clutch piston housing

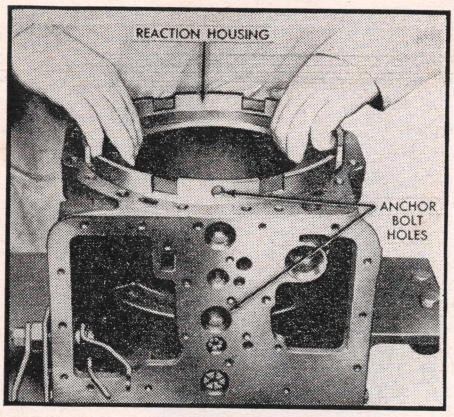

Fig. 10 Low clutch reaction housing

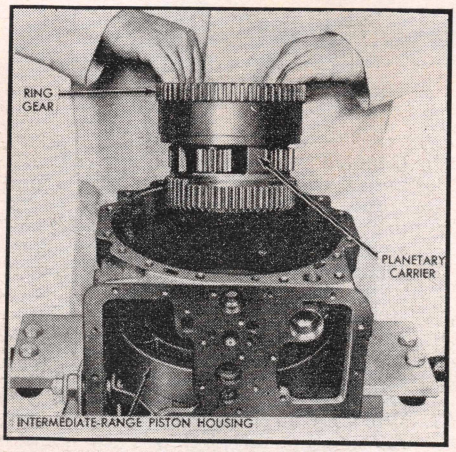

Fig. 11 Low ring gear and intermediate planetary carrier

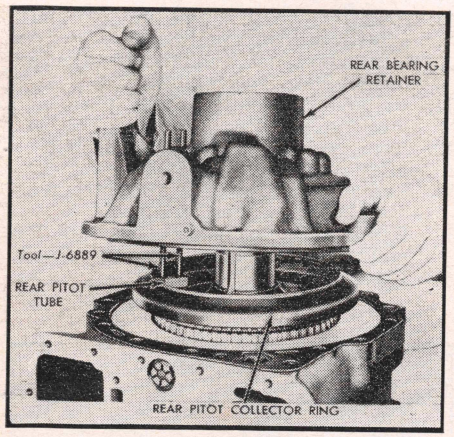

Fig. 13 Rear bearing retainer installation. Guide bolts shown may be made from 1/4" brazing rod 6" long and threaded for a length of 3/8"

35. Remove intermediate clutch Belleville spring. Then remove apply plate, clutch plate and ring gear as a unit.
36. Remove reaction housing after removing anchor bolt from bottom of transmission.
37. Remove oil collector.
38. Remove range selector and throttle control levers as required.

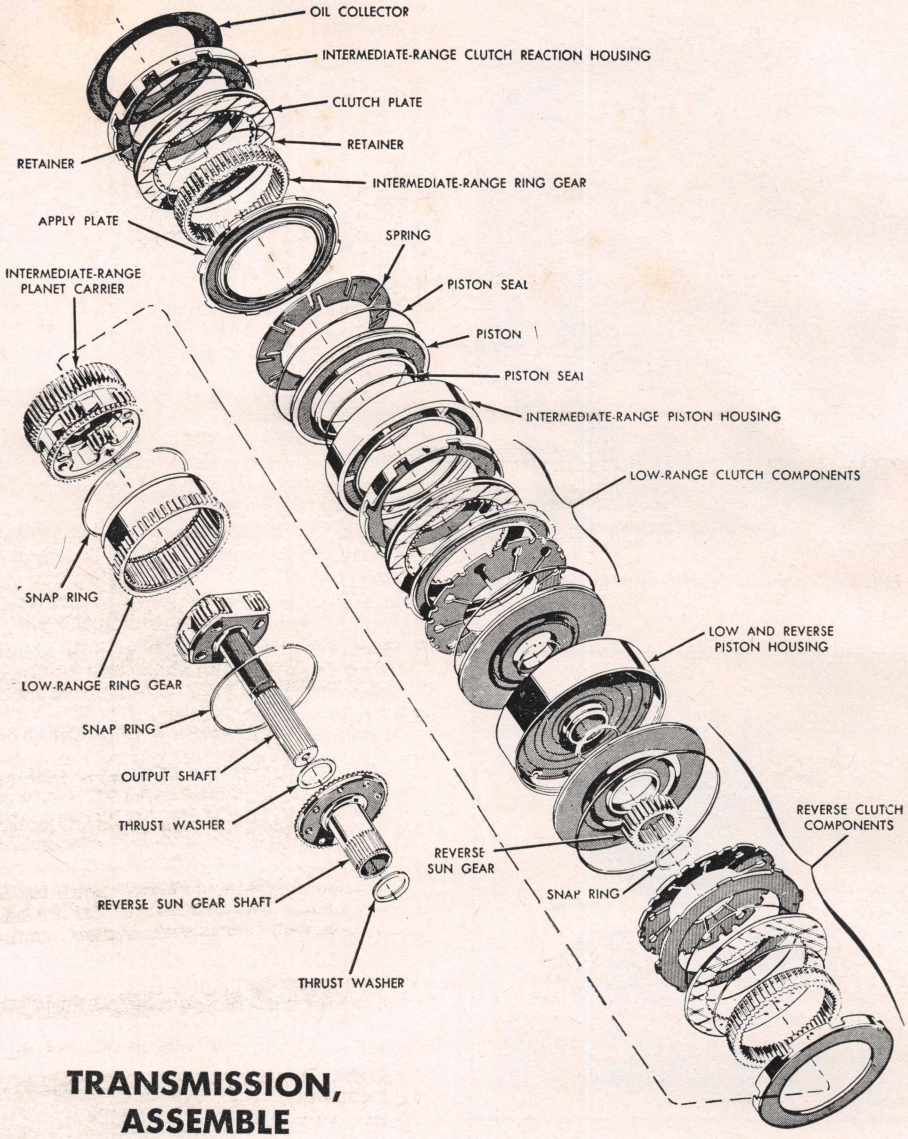

Fig. 12 Clutches and gears

TRANSMISSION, ASSEMBLE

Low and Intermediate Clutches and Gears and Low and Reverse Clutch Piston Housing

1. If a housing shim was removed during disassembly, install the same shim.
2. Install oil collector with conical portion facing toward front of housing.
3. Install intermediate clutch reaction housing so that threaded anchor bolt hole is aligned with hole in bottom of transmission case.
4. Install intermediate ring gear with longer section of gear toward front of transmission and toward reaction plate, Fig. 12.
5. Install intermediate clutch apply plate. This plate has an oil collector ring installed at its inner diameter.
6. Install, *but do not tighten,* the intermediate clutch reaction housing anchor bolt.
7. Install intermediate clutch Belleville spring with convex side toward rear of transmission. *Make sure spring is centered pefectly on clutch apply plate on which it seats so the piston housing will seat properly around it.*
8. Install intermediate piston housing with piston facing Belleville spring and with tapped hole in piston housing in line with the corresponding anchor bolt hole in bottom of case.
9. Install, *but do not tighten,* the intermediate clutch piston housing anchor bolt.
10. Install low ring gear and intermediate planetary carrier, Fig. 11. Rotate assembly until planetary pinion teeth engage internal teeth of ring gear.
11. Install low clutch reaction housing, aligning the tapped hole in the plate with its corresponding anchor bolt hole in bottom of transmission case, Fig. 10. Install, *but do not tighten,* reaction housing anchor bolt.
12. Install clutch plate and clutch apply plate.
13. Install transmission output shaft assembly, engaging planetary pinion teeth with internal teeth of low ring gear.
14. Install bronze thrust washer on out-

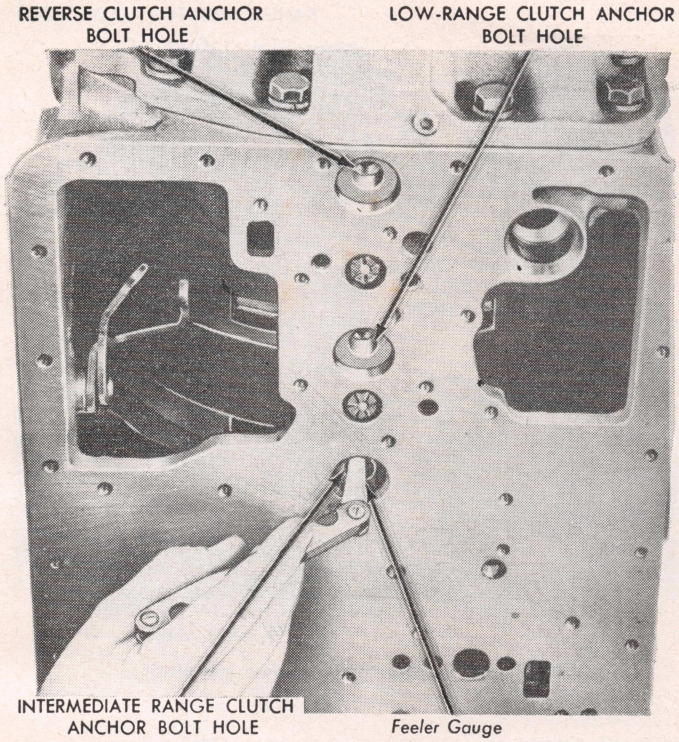

Fig. 14 Checking reverse, low and intermediate clutch plate clearances

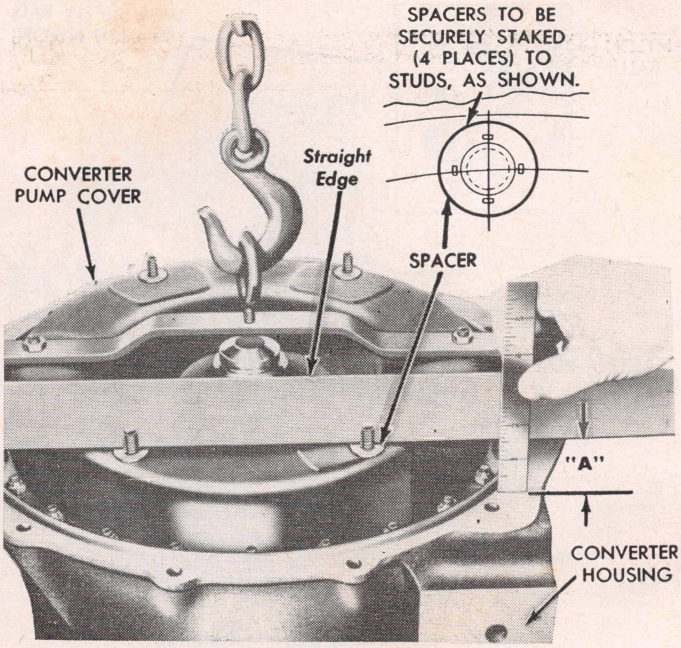

Fig. 16 Converter stack control spacer measurement

put shaft. Then install reverse sun gear shaft over output shaft. Mesh teeth on flange with internal teeth of ring gear.

15. Install new snap ring in internal groove of low ring gear. Then install low clutch Belleville spring with convex side toward rear of transmission. *Make sure spring is centered perfectly on clutch apply plate on which it seats so low and reverse piston housing will seat around it.*
16. Install low and reverse clutch piston housing, aligning tapped hole in piston housing with corresponding anchor bolt hole in bottom of transmission case, Fig. 9. *Do not install anchor bolt at this time.*

Reverse Planetary Gearing and Clutch

1. Install reverse clutch Belleville spring with concave side toward rear of transmission.
2. Before installing reverse clutch pack in housing, assemble it as follows: Place clutch apply plate on bench with flat surface up. Position reverse ring gear and clutch plate assembly on apply plate with longer section of ring gear external teeth up. Over these two parts position reverse reaction housing with slots down so slots engage clutch apply plate tangs. Install this assembly in transmission case, aligning tapped hole in reaction housing with corresponding anchor bolt in bottom of transmission case. *Do not install anchor bolt at this time.*
3. Install reverse sun gear on sun gear shaft and secure with new snap ring.
4. Install bronze thrust washer over output shaft.
5. Install reverse planetary carrier and rear pitot collector ring on output shaft. Make sure planetary pinions mesh with sun gear and reverse ring gear.

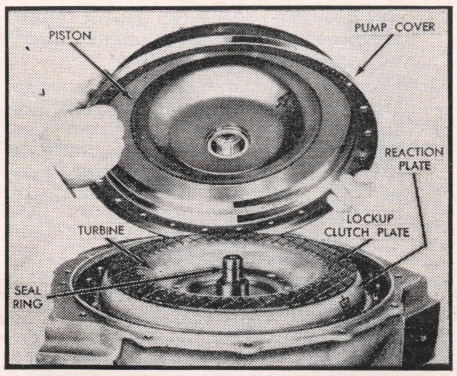

Fig. 15 Converter pump cover installation

Selecting Proper Rear Bearing Retainer Gasket

1. With rear pump and speedometer drive gear removed, install rear bearing retainer, *without gasket,* on rear of transmission case.
2. Install four bearing retainer mounting bolts at 90° intervals, and tighten them to 85 *inch-pounds* torque.
3. Check clearance between bearing retainer and rear surface of transmission case near points where bolts are installed. This clearance will determine which gasket or gaskets to use. Gaskets are available in .012″, .016″ and .021″ thickness.

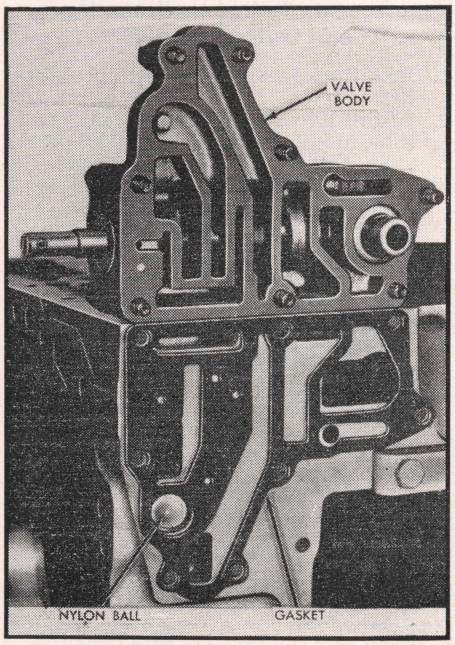

Fig. 17 Hydraulic retarder valve installation

4. If the measured clearance is .005-.015″ use .012″ gasket. If clearance is .016-.021″ use .016″ gasket. If clearance is .022-.027″ use .021″ gasket. If clearance is .028-.029″ use one .012″ and one .016″ gasket.
5. Install, *but do not tighten,* low and reverse clutch piston housing anchor bolt and reverse clutch reaction housing anchor bolt.
6. Remove bearing retainer.
7. Tighten five anchor bolts installed in bottom of transmission case to a torque of 10 lbs. ft.

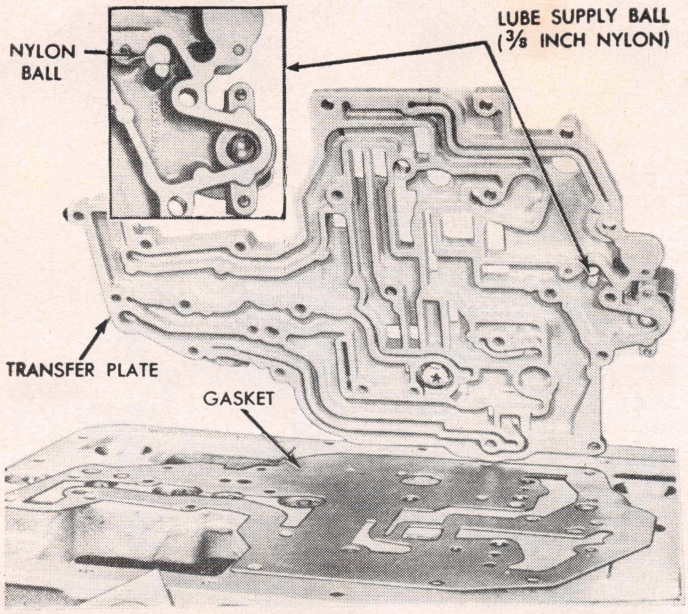

Fig. 18 Oil transfer plate installation

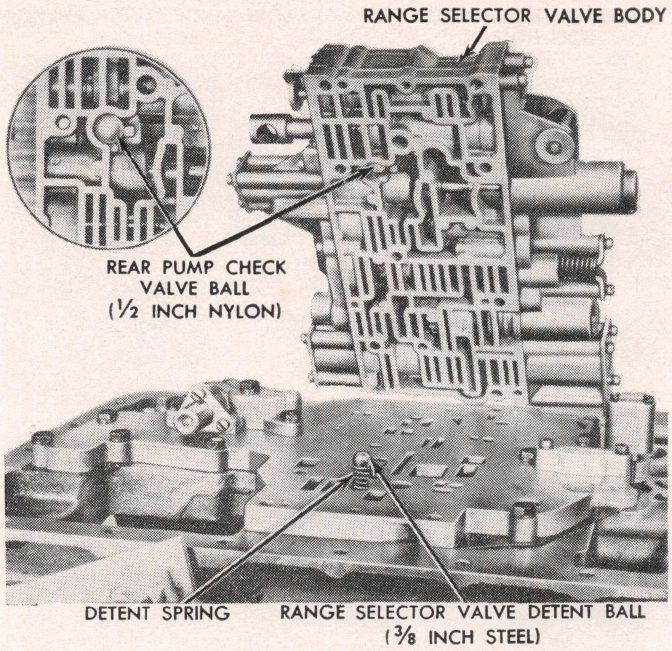

Fig. 20 Range selector valve body installation

Rear Bearing Retainer, Brake Drum and Output Flange

1. Install correct bearing retainer gasket.
2. Install two guide bolts in rear pitot tube, making sure open (drilled port) side of pitot tube is toward bolts.
3. Place pitot tube in rear pitot collector ring with tube portion toward vanes and guide bolts toward rear of transmission, Fig. 13.
4. Carefully lower rear bearing retainer over output shaft while guiding guide bolts through pitot tube mounting bolt holes in retainer. It also will be necessary to guide rear pump drive lugs into driving slots in reverse planetary carrier and to start speedometer drive gear and spacer on output shaft. *Do not remove guide bolts at this time. Do not turn output shaft until flange retaining bolt is installed, otherwise damage to pitot tube and governor vanes may result.*
5. Install rear bearing retainer bolts and torque to 42-50 lb. ft.
6. Remove low and intermediate and reverse clutch reaction housing anchor bolts and, using a narrow feeler gauge in bolt holes and narrow screwdriver, separate apply plates and friction clutch plates in each range and measure clearance between them, Fig. 14. Clearance for intermediate range should be .020-.030″. A minimum clearance of .008″ in the low and reverse clutches and .018″ in intermediate clutch is allowable. If clearances are correct, install anchor bolts removed and torque them to 35-40 lb. ft.
7. Torque two piston housing anchor bolts to 17-20 lb. ft.
8. Remove one pitot tube guide bolt and start one mounting bolt, while holding out firmly on remaining guide bolt. Now, hold out firmly on mounting bolt, which has just been started, and remove remaining guide bolt. Then start other mounting bolt. *Do not tighten mounting bolts at this time.* The bolts should protrude $\frac{1}{16}$″ or more.
9. Install output flange and parking brake drum. *Do not turn output shaft while installing these parts; if shaft is turned, pitot tube or governor may be damaged.*
10. Install O-type ring seal, tab washer and output shaft bolt. Tighten bolt to 10 lb. ft. torque, being careful not to allow drum to rotate while tightening.
11. Torque pitot tube bolts to 10-12 lb. ft.
12. Torque output flange bolt to 83-100 lb. ft.
13. Install speedometer fitting in rear bearing retainer.

Splitter Mechanism, High Clutch and Power Take-Off Gear

1. Position transmission with front surface facing upward.
2. Install splitter mechanism, Fig. 7. The three anchor bolt holes in the high clutch diaphragm must align with the three transmission case holes, two in the bottom and one hole in the top of the housing.
3. Install three anchor bolts, the shorter one at top of transmission. Tighten two bottom bolts to a torque of 17-20 lb. ft. *Do not tighten the top bolt at this time; failure to tighten bolts in the correct order may cause internal oil leakage.*

Hydraulic Retarder

1. Install low splitter reaction plate with vanes toward front of housing and anchor bolt hole in line with hole in bottom of housing.

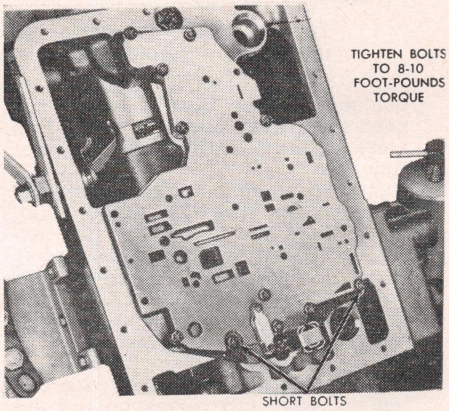

Fig. 19 Oil transfer plate attaching bolts

2. Install reaction plate anchor bolt and torque to 17-20 lb. ft.
3. Tighten diaphragm anchor bolt at top of housing to 17-20 lb. ft.
4. Install hook-type ring seal around splitter ring gear of turbine shaft and retarder rotor, Fig. 6.
5. Make sure thrust washer is in front of splitter planetary carrier and that the hook-type seal ring is in the groove at front of splitter output shaft. Oil the thrust washer and hook seal, then install turbine shaft and retarder rotor.

Torque Converter

1. Place converter housing gasket on transmission case.
2. Remove converter pump and hub. *Converter pump should be installed within one hour after removal while seal is still pre-stretched.*
3. The bronze thrust washer should

be checked to be sure it is being held in place at the rear of the ground sleeve by oil soluble grease. Install converter housing on transmission case and torque mounting bolts to 42-50 lb. ft.

4. Install hook-type seal ring on converter pump hub.
5. Install converter pump. Make sure slots in hub mate with front pump drive lugs and that hook-type ring seal on hub passes through front pump seal without damage to seal ring or seal.
6. Install seal in groove just inside bolt circle.
7. Install freewheel race spacer on ground sleeve with concave side up.
8. Install new snap ring to retain freewheel race spacer, then install freewheel roller race on ground sleeve.
9. Carefully install second stator. When installed, stator should freewheel in direction of arrow on converter pump, and lock when turned in opposite direction.
10. Install bronze spacer washer, then install first stator over roller race so that springs and rollers do not fall out. The first stator, when installed, should freewheel in the direction of the arrow on the converter pump, and should lock when turned in the opposite direction.
11. Install turbine on turbine shaft, Fig. 15.
12. Install snap ring and hook-type ring seal on turbine shaft, Fig. 15.
13. Install seal ring in groove just inside bolt circle on front of lockup clutch reaction plate.
14. Install reaction plate, Fig. 15. *If inked balance marks are found on reaction plate, converter pump, lockup piston and pump cover, assemble the parts with the marks aligned.*
15. Install lockup clutch plate on reaction plate with internal teeth engaging turbine splined ring, Fig. 15.
16. Install pump cover on converter pump studs. *If balance marks are on cover and pump, align balance marks.* Install four nuts at 90° intervals and tighten alternately to 10 lb. ft. to prevent synthetic seal from being forced out of its groove. install remaining nuts and torque all nuts to 19-23 lb. ft.
17. If any of the parts listed below are replaced in the course of the work, the dimension indicated by "A" in Fig. 16 must be checked. The required dimension is 1.572-1.592". Parts replacement which may affect dimension "A" are: Converter pump cover assembly, lockup clutch reaction plate, converter pump, converter pump hub, converter ground sleeve assembly and converter housing. Dimension "A" may be checked by fastening a sling as shown and applying a pull of 100 lbs. or more to remove all end play. If the dimension is not within specified limits, install or remove converter stack control spacers as needed. Spacers are furnished in five thicknesses ranging from .027" to .101".

Oil Transfer Plate, Valve Bodies, Oil Pan and Filter

1. Install hydraulic retarder valve body and nylon ball, Fig. 17. Tighten mounting bolts to 15-18 lb. ft.
2. Install oil transfer plate as shown in Figs. 18 and 19. Tighten bolts to 8-10 lb. ft.
3. Install downshift timing valve body on oil transfer plate and torque bolts to 8-10 lb. ft.
4. Install range selector valve body as shown in Fig. 20 and torque bolts to 4-6 lb ft.
5. Place new seals on both pump pickup tubes and install oil pan, torqueing bolts to 8-10 lb. ft.
6. Install fluid filter and tighten nut to 8-10 lb. ft.

Sub-Assemblies, Overhaul

CONVERTER PUMP COVER & LOCKUP CLUTCH

Disassemble

1. Remove lockup clutch reaction plate, Fig. 21, and lift out clutch plate. Tap edge of cover against wooden block, if necessary, to remove reaction plate.
2. Remove seal ring from front flange of reaction plate.
3. Remove snap ring which retains lockup clutch piston in pump cover.
4. Remove piston from pump cover by tapping edge of cover against a wooden block.
5. Remove seal from outer groove in piston.

Assemble

1. Install seal ring in outer groove in lockup clutch piston, then apply a light coat of oil to the seal.
2. Install piston in converter pump cover so that dowel holes in piston engage dowels in cover, Fig. 22. Be sure that balance marks on both parts are also aligned. *If the dowels do not enter the dowel holes, the lockup clutch will not disengage and the converter will not function.*
3. Install snap ring. If piston does not push far enough into the pump cover to install the snap ring, use a suitable sleeve and press ram to compress the piston.

CONVERTER PUMP

Disassemble

1. Remove large seal ring from converter pump, Fig. 23.
2. Tap out all damaged or worn converter pump bolts. Only damaged bolts should be removed from the pump. *Do not lose the positions of the balance weights.*
3. Remove bearing retainer from pump.
4. Tap hub from pump.
5. Remove synthetic seal ring from pump and hook-type seal ring from hub.
6. Drive bearing from hub, using a soft drift and light hammer.

Assemble

1. If any pump cover bolts were removed, insert new bolts and press them in place. Install balance weights in their proper positions.
2. Install new synthetic seal ring in outer groove of pump face just inside pump circle.
3. Install new seal ring on hub mounting surface groove of pump.
4. Install bearing in pump hub and position hub in pump.
5. Install bearing retainer on hub, align mounting holes, and install bolts, tightening them to 9-11 lb. ft. torque. *Do not install the hook-type seal ring in the pump hub at this time as the converter pump hub is to be used to pre-fit the front pump oil seal.*

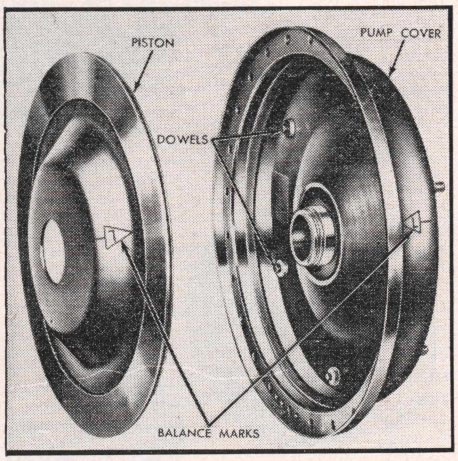

Fig. 22 Lockup clutch piston and converter pump cover balance marks and dowels

CONVERTER STATORS

Disassemble and Inspect

Remove the springs or rollers which did not fall out of the stators during removal.

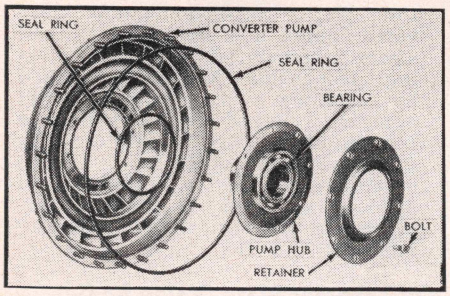

Fig. 23 Converter pump

Check both stators for cracks or excessive wear. Check springs and rollers for nicks, burrs or other damage.

Assemble

1. Apply oil soluble grease in stator cam pockets, then place roller springs in openings with open ends facing stator bore.
2. Compress springs with a small screwdriver to allow roller to be inserted in shallow end of each cam pocket. Install one spring and roller in each of the eight cam pockets in each stator. *Be sure springs and rollers are properly installed in roller race so that stators lock when they are turned in opposite direction*

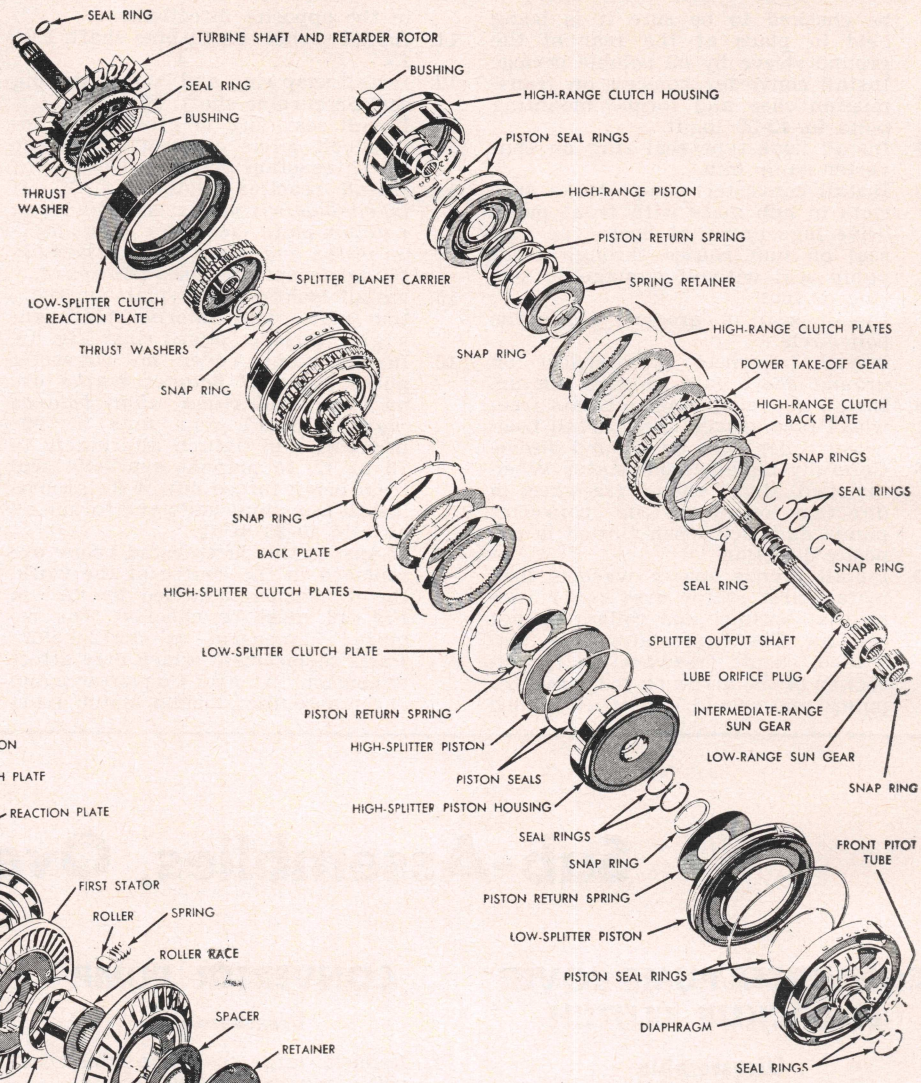

Fig. 25 Splitter mechanism, high clutch and power take-off drive gear

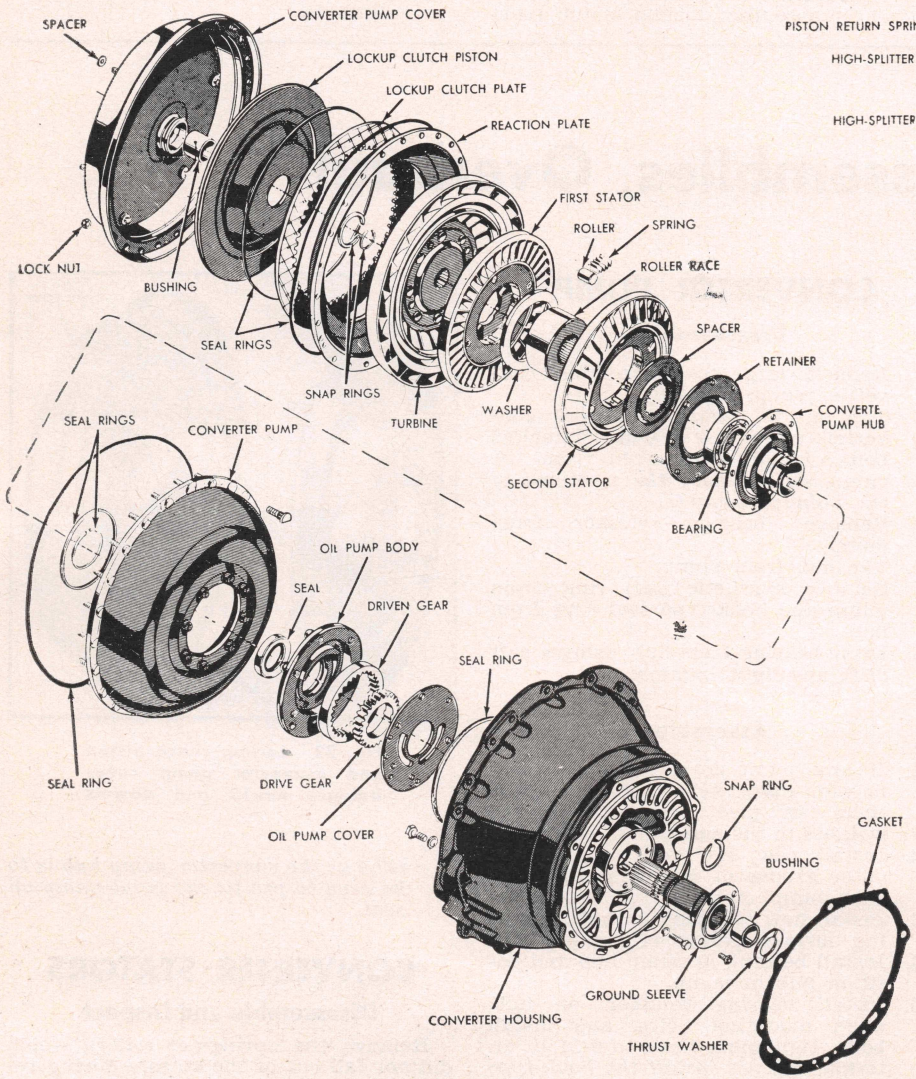

Fig. 21 Torque converter, lockup clutch and front pump

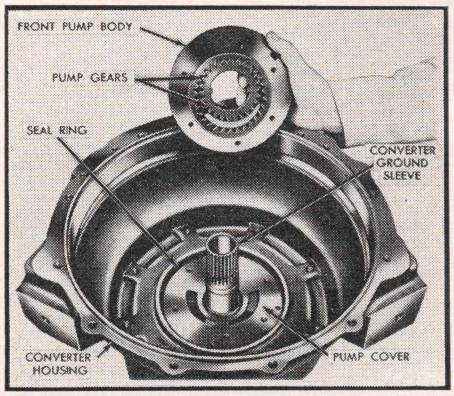

Fig. 24 Front pump body

of engine rotation, and that they freewheel when turned in direction of engine rotation.

CONVERTER HOUSING & FRONT PUMP

Disassemble

1. Remove front pump body and gears from housing, Fig. 24.
2. Lift pump cover and seal ring out of converter housing.
3. Remove gears from pump body and drive seal ring out the front of pump body.
4. Unfasten converter ground sleeve from converter housing, using a wood block to drive sleeve from housing.

Assemble

1. Align the holes in the ground sleeve with the holes in the converter housing by installing two headless bolts in the converter housing.
2. Place the sleeve through the rear of the housing so the bolt holes slip over the headless bolts.
3. Using a wood block against the rear of the sleeve, drive the sleeve tight against the housing.
4. Remove the headless bolts and install the retaining bolts, tightening them to a torque of 17-20 lb. ft.
5. Coat a new front pump seal with Permatex on the outer diameter. Start seal into front bore of pump body.
6. Support machined rear face of pump body on a flat surface and press seal into body. *Use a hand press for this operation as a hydraulic press may damage the seal.* Press seal into body until there is 1.595-1.605" from front surface of seal to rear machined surface of pump body.
7. Place gears in pump body.
8. Position pump cover and install two guide bolts in body.
9. Install square section O-type seal ring aroung pump cover.
10. Place pump in front of converter housing and insert guide bolts through proper holes in housing and install four bolts with lock washers through rear of converter housing into pump body.
11. Remove guide bolts, install two remaining bolts and tighten all bolts to a torque of 15-18 lb. ft.
12. With hook-type seal ring removed from converter pump hub, align slots in hub with pump drive lugs and insert hub through seal. *Leave these parts assembled in this manner until ready for final assembly.*
13. Using oil soluble grease to hold bronze thrust washer in place, position washer in rear of ground sleeve.

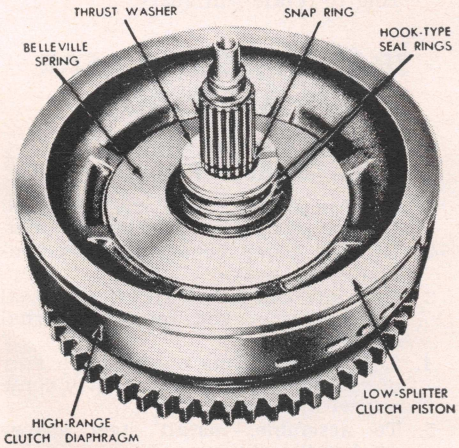

Fig. 26 Low splitter clutch piston

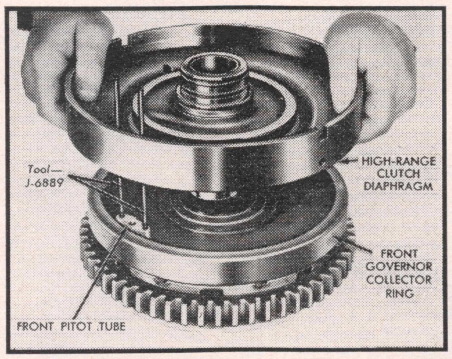

Fig. 27 High clutch diaphragm installation

SPLITTER MECHANISM, HIGH CLUTCH & PTO DRIVE GEAR

Disassemble, Fig. 25

1. Remove low and intermediate sun gears after removing snap ring.
2. Grasp unit with fingers under high clutch and the thumbs over low splitter clutch friction plate to prevent it falling apart; then place it on blocks.
3. Remove thrust washer and snap ring. Then remove splitter planetary carrier and thrust washer.
4. Remove high splitter clutch and low splitter clutch friction plate.
5. Remove high splitter clutch back plate after removing snap ring.
6. Remove clutch plates and low splitter clutch friction plate.
7. Place high splitter clutch housing in press, supporting rear of housing and compress piston Belleville spring and remove snap ring. *When releasing Belleville spring pressure be sure that spring does not catch in snap ring groove.*
8. Remove Belleville spring and tap forward edge of clutch housing against wood block to remove high splitter piston.
9. Remove synthetic seal ring from piston and hook-type seal ring from housing.
10. Remove thrust washer and two hook-type seal rings from diaphragm, Fig. 26.
11. Remove splitter output shaft assembly, doing so slowly so that hook ends of seal rings do not break off.
12. If necessary, remove two wire snap rings and three hook-type seal rings.
13. Support rear of high clutch housing in a press and compress low splitter clutch piston Belleville spring and remove snap ring. Carefully release pressure on Belleville spring to keep its inner edge from catching in snap ring groove. *Do not attempt to lift diaphragm from assembly at this time as the vanes in the front fluid velocity governor may be damaged by the pitot tube.*
14. Remove assembly from press and lift out Belleville spring.
15. Remove low splitter clutch piston from high clutch diaphragm and remove synthetic seal ring from piston and hook-type seal ring from diaphragm. *Do not attempt to remove diaphragm from assembly.*
16. Remove the two front pitot tube mounting screws and lockwashers from front surface of diaphragm to allow pitot tube to drop into front governor collector ring. Lift diaphragm from assembly and remove two hook-type seal rings from rear of diaphragm. Remove pitot tube from collector ring.
17. Support front surface of high clutch housing assembly in a press, using a suitable block in center of housing so that governor collector ring will not be damaged. Compress piston return spring retainer and remove snap ring. *Release pressure on piston return spring retainer slowly, making sure inner edge of spring retainer does not catch in snap ring groove as spring expands.*
18. Remove assembly from press and lift off retainer and spring.
19. Remove large internal snap ring from high clutch housing.
20. Remove high clutch reaction plate, three internal splined plates, two external splined plates and the power take-off gear.
21. Tap rear of housing on a wood block to loosen high clutch piston. Remove piston, then remove synthetic seal from piston and hook-type seal ring from housing.

Assemble, Fig. 25

1. Install hook-type seal ring on high clutch housing and synthetic seal ring on high clutch piston. Coat seals lightly with oil.
2. Install piston in housing.

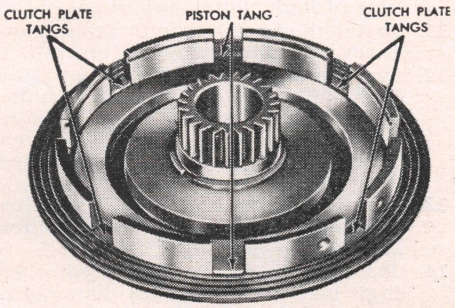

Fig. 28 Low splitter clutch plate installation

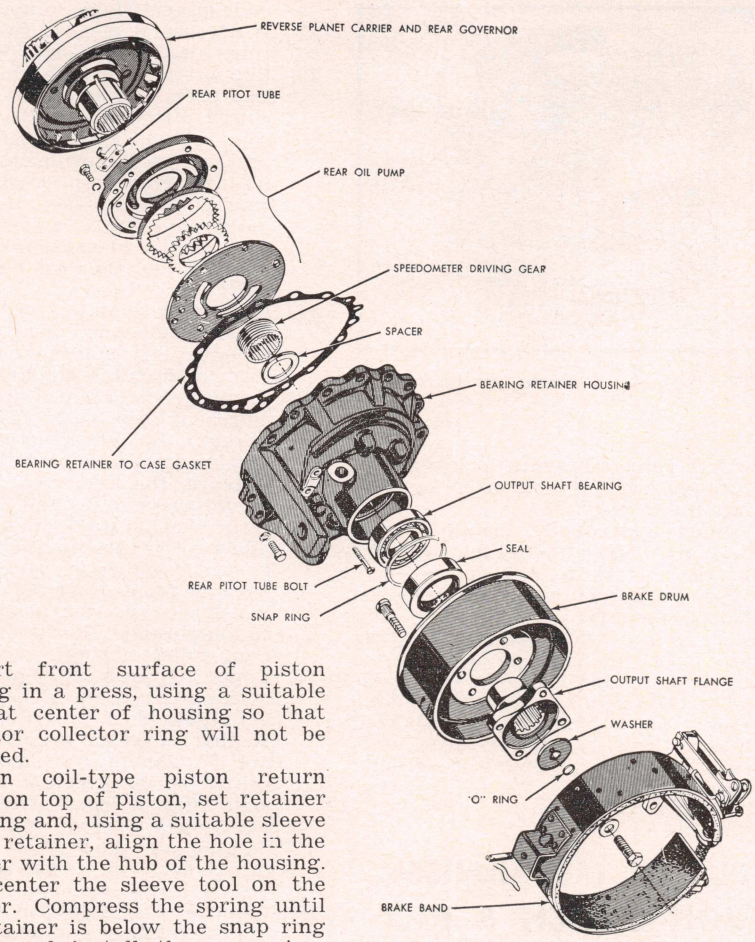

Fig. 29 Rear bearing retainer and rear pump

3. Support front surface of piston housing in a press, using a suitable block at center of housing so that governor collector ring will not be damaged.
4. Position coil-type piston return spring on top of piston, set retainer on spring and, using a suitable sleeve on the retainer, align the hole in the retainer with the hub of the housing. Then center the sleeve tool on the retainer. Compress the spring until the retainer is below the snap ring groove and install the snap ring. *Make sure the inner edge of the retainer does not catch in the snap ring groove.*
5. Install snap ring in housing hub groove and slowly release pressure on retainer. *Make certain snap ring is fully seated and that the retainer is straight and returns firmly against snap ring.* Remove assembly from press.
6. Install power take-off gear, aligning drive slots with slots in high clutch housing.
7. Install high clutch plates.
8. Install high clutch reaction plate so that the two longer tangs engage drive slots in power take-off gear.
9. Install large internal snap ring in high clutch housing to retain high clutch reaction plate.
10. Install two hook-type seal rings on rear of high clutch diaphragm.
11. Install high clutch with front governor collector ring facing upward.
12. Install two guide bolts in front pitot tube on the side of pitot tube that the drilled port is located, Fig. 27. (Guide bolts can be made from two 5-inch lengths of $\frac{3}{16}$" brazing rod threaded with a 10-32 die a distance of $\frac{3}{8}$".)
13. Place pitot tube in governor collector ring with intake port toward outer diameter of ring.
14. Install high clutch diaphragm over high clutch. Make sure diaphragm enters high clutch housing without damaging hook-type seal rings at rear of diaphragm. At the same time, direct guide bolts through pitot tube mounting screw holes, Fig. 27.
15. While holding up firmly on one of the guide bolts, remove other guide bolt and install pitot tube mounting screw and lockwasher. Tighten screw just enough to keep pitot tube from moving. Remove other guide bolt and install other mounting screw. Tighten both screws 38-48 lb. ft. torque. *Do not separate this assembly while pitot tube is in position.*
16. Install synthetic seal ring on low splitter clutch piston and the hook-type seal ring on low splitter piston housing side of diaphragm.
17. Lightly coat seal rings with oil and carefully install low splitter piston into diaphragm so that seal rings are not damaged.
18. Place assembly in press with low splitter clutch piston up. Then install the Belleville return spring on piston with convex side up. Compress spring carefully far enough to install snap ring. *Do not allow Pelleville spring to catch in snap ring groove while compressing spring.*
19. Place high clutch and diaphragm assembly on blocks. Install two wire snap rings and three hook-type seal rings on splitter output shaft. Lightly coat seal rings with oil and carefully install splitter shaft so that seal rings are not damaged.
20. Install hook-type seal ring on inner diameter of high splitter clutch housing and gear.
21. Install synthetic seal on outer diameter of high splitter piston.
22. Lightly coat seals with oil and install piston in housing, being careful not to damage seals.
23. Place piston and housing assembly in a press with piston up. Then install Belleville spring on piston with convex side up. Compress the spring carefully and only far enough to install the snap ring. Remove from press.
24. Install low splitter clutch friction plate on high splitter clutch housing so that the six internal tangs do not engage the slots in the housing where the high splitter piston tangs are located, Fig. 28. If the tangs through error are installed in the same slots, both splitter clutches would be applied when the high splitter piston is actuated.
25. Install two internal splined plates and one external splined plate.
26. Install high splitter clutch back plate, retaining it with large snap ring.
27. Install two hook-type seal rings and the bronze thrust washer on the front face of the diaphragm, then apply a light coat of oil to these parts.
28. Install high splitter clutch and low splitter clutch friction plate, being careful not to damage seal rings.
29. Coat bronze thrust washer with oil soluble grease and install in splitter planetary carrier.
30. Install splitter planetary, splining it on splitter output shaft and meshing with external teeth of high splitter clutch plates. Install snap ring on splitter shaft.
31. Lightly coat bronze thrust washer with oil and install on splitter planetary carrier.
32. Remove splitter assembly from blocks and place it on its side. *Be careful in handling the low and intermediate sun gears until they are installed and retained by snap rings so that the front pitot tube will not damage the front governor collector ring.*
33. Install low and intermediate sun gears. Then while holding splitter shaft by opposite end, install snap ring to retain sun gears.

TRANSMISSION REAR SUB-ASSEMBLIES

Rear Bearing Retainer & Rear Pump

1. To disassemble, Figs. 29, 29A, and remove pump from bearing retainer.
2. Remove pump cover and speedometer drive gear.
3. Pry out output shaft flange seal from retainer and remove internal snap ring.
4. Drive ball bearing out through rear of retainer; spacer washer will come out with retainer.
5. To assemble, install steel spacer washer in retainer.
6. Press ball bearing in retainer until

it is tight against shoulder in retainer.

7. Install bearing retainer snap ring.
8. Coat outside diameter of output shaft flange oil seal with Permatex and install seal so it is 1/32-3/64" above rear surface of retainer. *Do not assemble rear bearing retainer further until it has been used in the selection of the proper retainer-to-transmission gasket; this procedure is outlined under Transmission, Assemble.*
9. Install speedometer drive gear.
10. Install two guide bolts in rear bearing retainer. Then place pump cover over guide bolts. Install gears in pump body and slip pump body over guide bolts.
11. Start two of the pump retaining bolts, remove guide bolts and install other three bolts. Tighten all bolts to a torque of 15-18 lb. ft.

Reverse and Intermediate Clutch Plates and Ring Gears

1. To disassemble, straighten the clutch plate retainer ring at either side of the plate and remove the ring. Lift plate off gear. Then straighten and remove other ring.
2. To assemble, position clutch plate between the two grooves cut around the outside diameter of the ring gear. Place a new clutch plate retainer ring in one of the two grooves and crimp the ring at five evenly spaced intervals around the gear. Turn assembly over and install the other ring in the same manner as the first ring. *Do not crimp rings where cutouts are made in friction facings.*

Low, Reverse or Intermediate Piston Housing

1. To disassemble, tap edge of housing on wood block to loosen pistons and remove pistons from housings. Remove synthetic seal ring from outer groove of piston and hook-type seal ring from housing (or from piston in the case of the intermediate piston).
2. Assemble in the reverse order, lightly coating seals with oil and pushing them all the way into the housings.

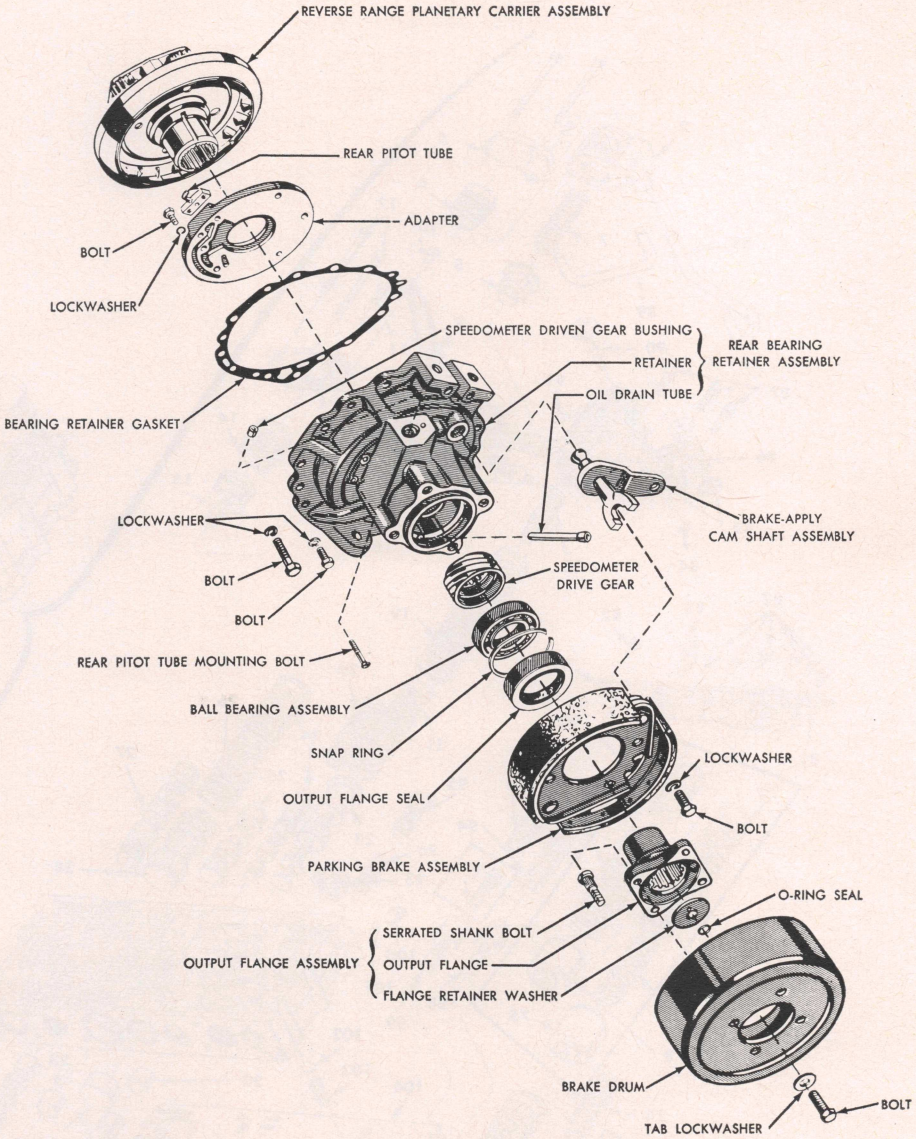

Fig. 29A Rear bearing retainer and parking brake. Note that no rear pump is used with this assembly

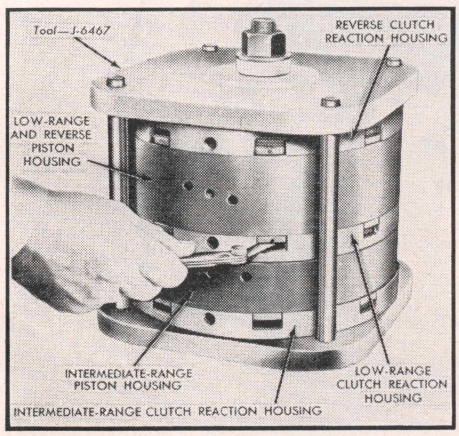

Fig. 30 Checking range clutch clearances

Low Ring Gear and Intermediate Planetary Carrier

1. To disassemble, remove snap ring from low ring gear and lift out intermediate planetary carrier.
2. To assemble, mesh the teeth of the carrier with the teeth of the ring gear and push the carrier into the ring gear. Install the snap ring to hold the assembly together.

Checking Clutch Clearances

It will be necessary to check the clutch clearances if any pistons, piston housings, apply plates, reaction housings, Belleville springs, or clutch plates have been replaced in the low, intermediate or reverse clutches. This check is performed before assembly of the clutches in the transmission housing, using the tool shown in Fig. 30. It is advisable to check these clutches on every rebuild or teardown to be certain the clutches meet the proper clearance specifications.

Assemble the clutches in the tool as shown in Fig. 30. Then check the clearances as follows:

1. Use a small screwdriver to separate the plates. Then measure the clearances between the clutch friction plates and apply plates of the reverse clutch with a feeler gauge. This clearance should be .010-.015".
2. Repeat this operation on the low clutch, the clearance of which should also be .010-.015".
3. Use the same procedure to check the intermediate clutch, the clearance of which should be .020-.030".
4. If the clutches do not have the specified clearances, it will be necessary to replace the apply plates, which are available in three thicknesses for

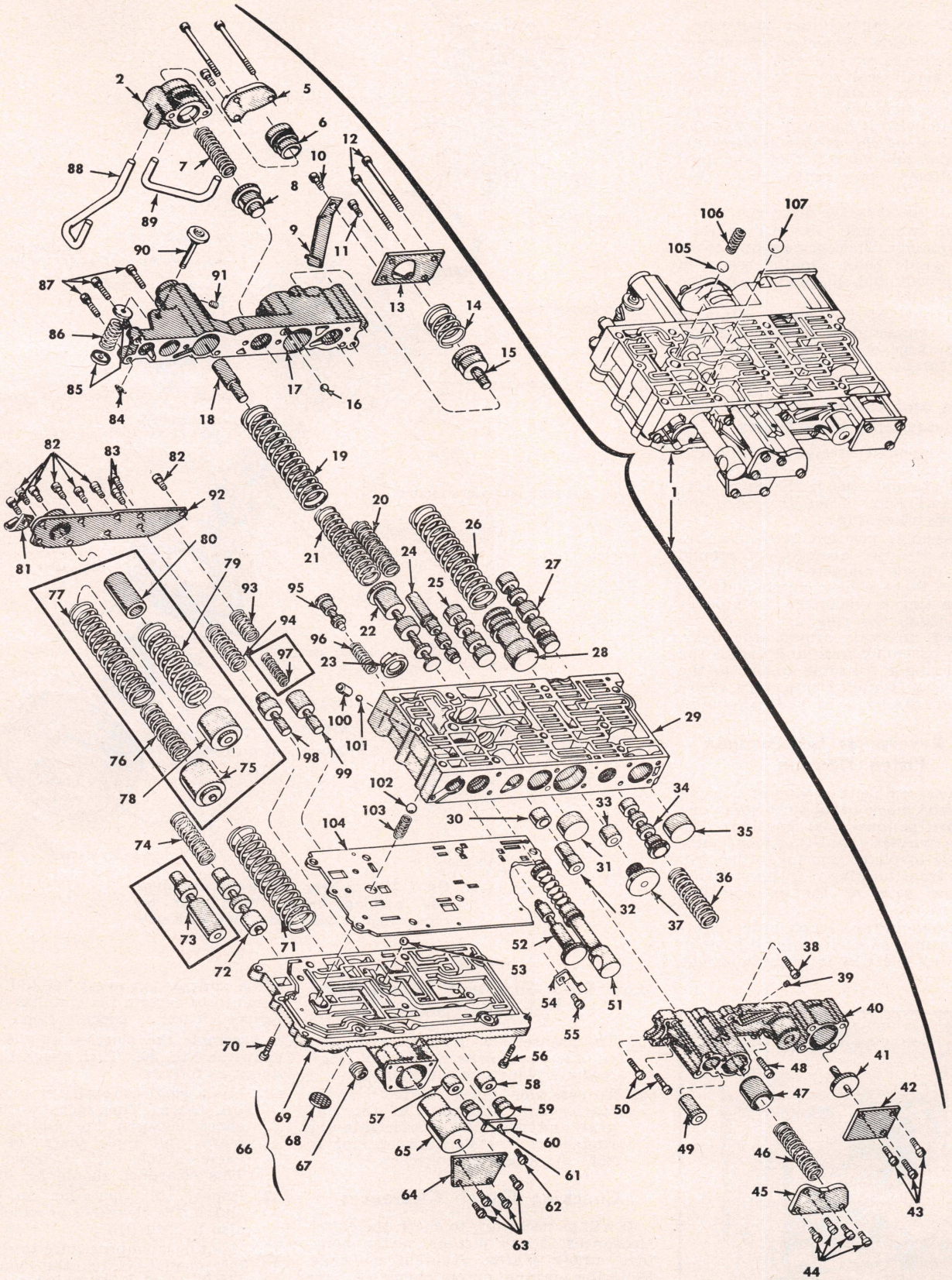

Fig. 31 CONTROL VALVE BODY
(boxed-in parts used on school bus)

each clutch: .338-.342", .345-349" and .352-356".

5. Measure the maximum thickness of the apply plate from the clutch stack and, by considering the clearance measurement taken while the stack is assembled, choose the correct plate to bring the clearance within specifications.
6. Establish the correct clutch clearances for the three ranges. Then remove the clutch pack from the fixture and stack them on the bench in the reverse order. Now, each part may be selected in the correct order for assembly in the transmission housing.

HYDRAULIC VALVES OVERHAUL

Oil Transfer Plate

Referring to Figs. 31, 32, remove lube supply cover, converter pressure regulator valve retainer, spring, seat and steel ball. The low range clutch exhaust regulator valve is pressed into the oil transfer plate and should not be removed unless it is to be replaced with a new one. Check the operation of the valve while cleaning the transfer plate. The valve should retain the cleaning solvent on the side opposite the spring for at least 15 seconds.

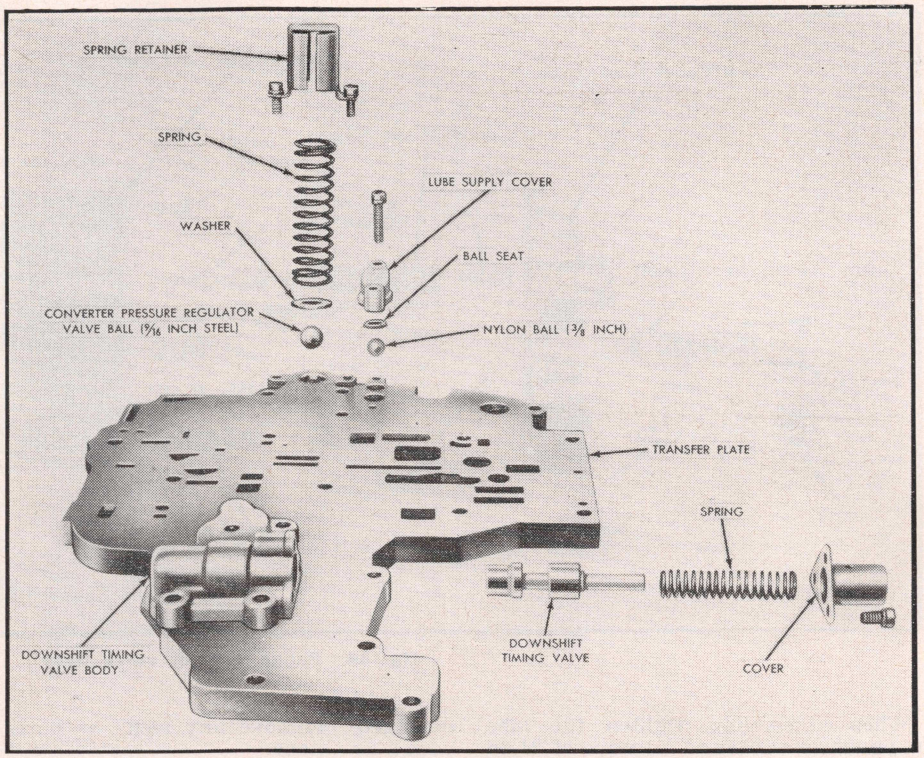

Fig. 32 Oil transfer plate

CONTROL VALVE BODY

1. Control valve body
2. Overcontrol valve body
3. Screw (10-24 x 7/16)
4. Screw (10-24 x 2 3/8)
5. Overcontrol valve cover
6. Overcontrol valve
7. Splitter rear pump plug spring
8. Splitter rear pump plug
9. High-transfer tube clip
10. Screw (10-24 x 7/16)
11. Screw (10-24 x 7/16)
12. Screw (10-24 x 2 3/8)
13. Intermediate-to-high shift valve cover
14. Intermediate-to-high shift valve spring
15. Intermediate-to-high blocker plug
16. Nylon ball (1/4")
17. Valve body front cover
18. Throttle valve plug
19. Main-pressure regulator primary spring
20. Lockup shift valve spring
21. Main-pressure regulator secondary spring
22. Main-pressure regulator valve
23. Reverse exhaust pressure regulator valve
24. Lockup shift valve
25. Splitter shift valve
26. Splitter relay valve spring
27. Intermediate-to-high shift valve
28. Splitter relay valve
29. Control valve body
30. Hydraulic retarder regulator plug
31. Lockup plug
32. Regulator plug
33. Front splitter shift (G1) plug
34. Low-to-intermediate shift plug
35. Intermediate-to-high shift plug
36. Intermediate shift valve spring
37. Rear splitter shift (G2) plug
38. Screw (10-24 x 3/4)
39. Oval point set screw
40. Valve body rear cover
41. Accelerator plug
42. Accelerator plug cover
43. Screw (10-24 x 1 5/8)
44. Screw (10-24 x 7/16)
45. Regulator cover
46. Accumulator valve spring
47. Accumulator valve
48. Screw (10-24 x 3/4)
49. Lockup knockdown plug
50. Screw (10-24 x 3/4)
51. Manual selector valve
52. Throttle valve
53. Steel ball (1/4)
54. Throttle valve retainer
55. Screw (10-24 x 3/8)
56. Screw (10-24 x 3/4)
57. Low splitter exhaust regulator spring
58. Intermediate-exhaust regulator plug
59. Intermediate-exhaust regulator stop plug
60. Plug retainer
61. Low-splitter exhaust regulator stop plug
62. Screw (10-24 x 7/16)
63. Screw (10-24 x 7/16)
64. Exhaust feed plug cover
65. Exhaust feed plug
66. Exhaust regulator valve body
67. Pipe plug (1/4")
68. Exhaust feed filter
69. Exhaust regulator valve body
70. Screw (10-24 x 3/4)
71. Exhaust feed plug spring
72. Lockup cutoff valve (truck)
73. Lockup cutoff valve (school bus)
74. Lockup cutoff valve spring
75. Trimmer valve (school bus)
76. Trimmer valve inner return spring (school bus)
77. Trimmer valve outer return spring (school bus)
78. Trimmer plug (school bus)
79. Trimmer spring (school bus)
80. Trimmer stop (school bus)
81. Drive transfer tube clip
82. Screw (10-24 x 7/16)
83. Screw (10-24 x 3/8)
84. Retainer spring
85. Exhaust check valve spring retainer
86. Pump overage regulator spring
87. Screw (10-24 x 3/4)
88. Drive transfer tube
89. High transfer tube
90. Exhaust check valve
91. Oval point set screw
92. Exhaust regulator valve cover
93. Intermediate exhaust regulator valve spring
94. Low-splitter exhaust regulator valve spring
95. Throttle regulator valve
96. Throttle valve (TV) spring
97. Intermediate exhaust regulator valve auxiliary spring (school bus)
98. Low-splitter exhaust regulator valve
99. Intermediate exhaust regulator valve
100. Reverse lockup inhibitor check valve retainer
101. Nylon ball (7/32")
102. Selector valve detent ball (3/8")
103. Selector valve detent spring
104. Valve body separator plate
105. Selector valve detent ball (3/8")
106. Selector valve detent spring
107. Nylon ball (1/2")

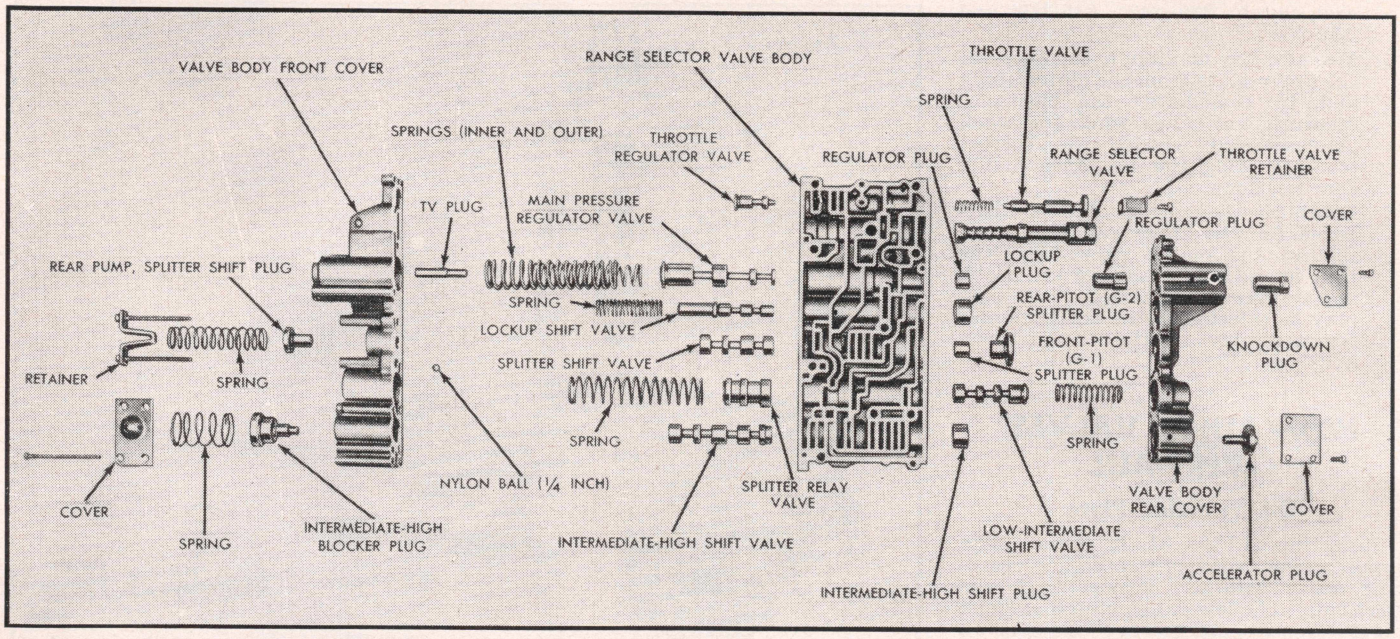

Fig. 34 Range selector valve body

When assembling, tighten the lube supply cover screws to a torque of 24-36 inch-lbs. *The nylon ball is installed from the other side of the oil transfer plate when the plate is assembled to the transmission.* Tighten converter pressure regulator valve retainer screws to a torque of 24-36 inch-lbs.

Downshift Timing Valve

Remove this valve as indicated in Fig. 32. When assembled, tighten the cover screws to a torque of 24-36 inch-lbs.

Range Selector Valve Body

In servicing this valve, refer to Figs. 33 and 34. Also do not mix the various springs located in the valve body. Fig. 35 identifies the springs and balls and their dimensions.

When disassembled, wash all parts in cleaning solvent and dry thoroughly with air pressure. Check all parts and castings for cracks, nicks or burrs. Replace any cover or casting that is cracked or damaged. Remove any nicks or burrs with a fine stone.

Do not sand or polish any radius on the valves or plugs. The valves and plugs are manufactured with a sharp edge to prevent dirt from sticking in the valve bore.

All valves and plugs should be installed dry and must move in the valve body bore by their own weight. Do not attempt to force any valves into the bores as damage to the casting will result. If any valve or plug sticks, remove it and recheck for nicks or burrs.

When installing the front cover to the range selector valve body, check the mating surfaces between these parts. Be sure there is a tight seal and that none of the springs are caught between the housings. The front cover should not protrude above the main valve body face since it assembles against the oil transfer plate. Tighten all screws to a torque of 24-36 inch-lbs.

Check the mating surface between the valve body rear cover and range selector valve body. Be sure there is a tight seal and the intermediate shift valve spring is not caught between the housings.

If the rear cover and range selector valve body are in proper position (not distorted), tighten the screws to a torque of 24-36 inch-lbs., starting at the center of the cover and working toward the ends.

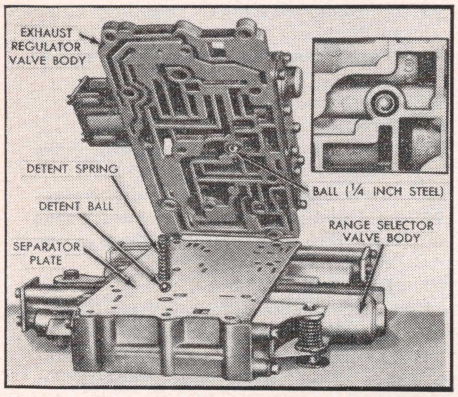

Fig. 33 Range selector and exhaust regulator valve bodies

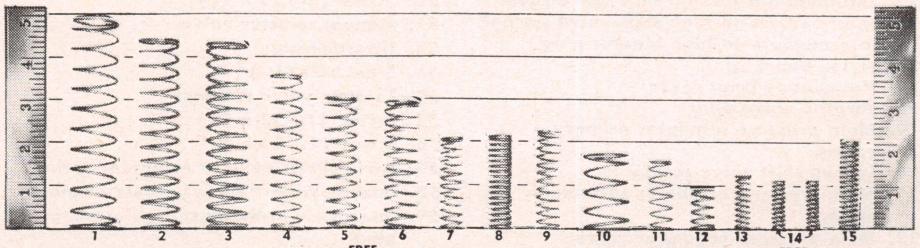

SPRING	FREE HEIGHT (Inches)	NUMBER OF COILS
1. EXHAUST FEED PLUG	5.00	12½
2. SPLITTER RELAY VALVE	4.59	15½
3. MAIN PRESSURE REGULATOR VALVE (Outer)	4.46	16
4. MAIN PRESSURE REGULATOR VALVE (Inner)	3.67	13½
5. SPLITTER SHIFT VALVE	3.25	13
6. CONVERTER PRESSURE REGULATOR VALVE (Ball)	3.14	13½
7. LOCKUP CUT-OFF VALVE	2.50	12½
8. LOCKUP SHIFT VALVE	2.22	18½

SPRING	FREE HEIGHT (Inches)	NUMBER OF COILS
9. LOW-TO-INTERMEDIATE SHIFT VALVE	2.34	13½
10. INTERMEDIATE-TO-HIGH SHIFT VALVE	1.82	6
11. LOW-SPLITTER EXHAUST REGULATOR VALVE	1.72	8½
12. INTERMEDIATE EXHAUST REGULATOR VALVE	93	6
13. THROTTLE VALVE	1.210	11
14. RANGE SELECTOR VALVE DETENT	1.161	12
15. DOWNSHIFT TIMING VALVE	2.15	17

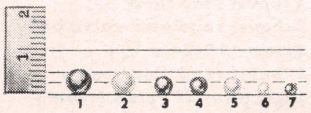

1. CONVERTER PRESSURE REGULATOR VALVE (STEEL) 5/16 INCH
2. REAR PUMP CHECK VALVE (NYLON) ½ INCH
3. and 4. RANGE SELECTOR VALVE DETENT (STEEL) ⅜ INCH
5. LUBRICATION SUPPLY CHECK (NYLON) ⅜ INCH
6. SPLITTER RELAY CHECK (NYLON) ¼ INCH (INSTALLED IN RANGE SELECTOR VALVE BODY FRONT COVER)
7. EXHAUST FEED PLUG PASSAGE CHECK (STEEL) ¼ INCH

Fig. 35 Control valve body spring and ball identification

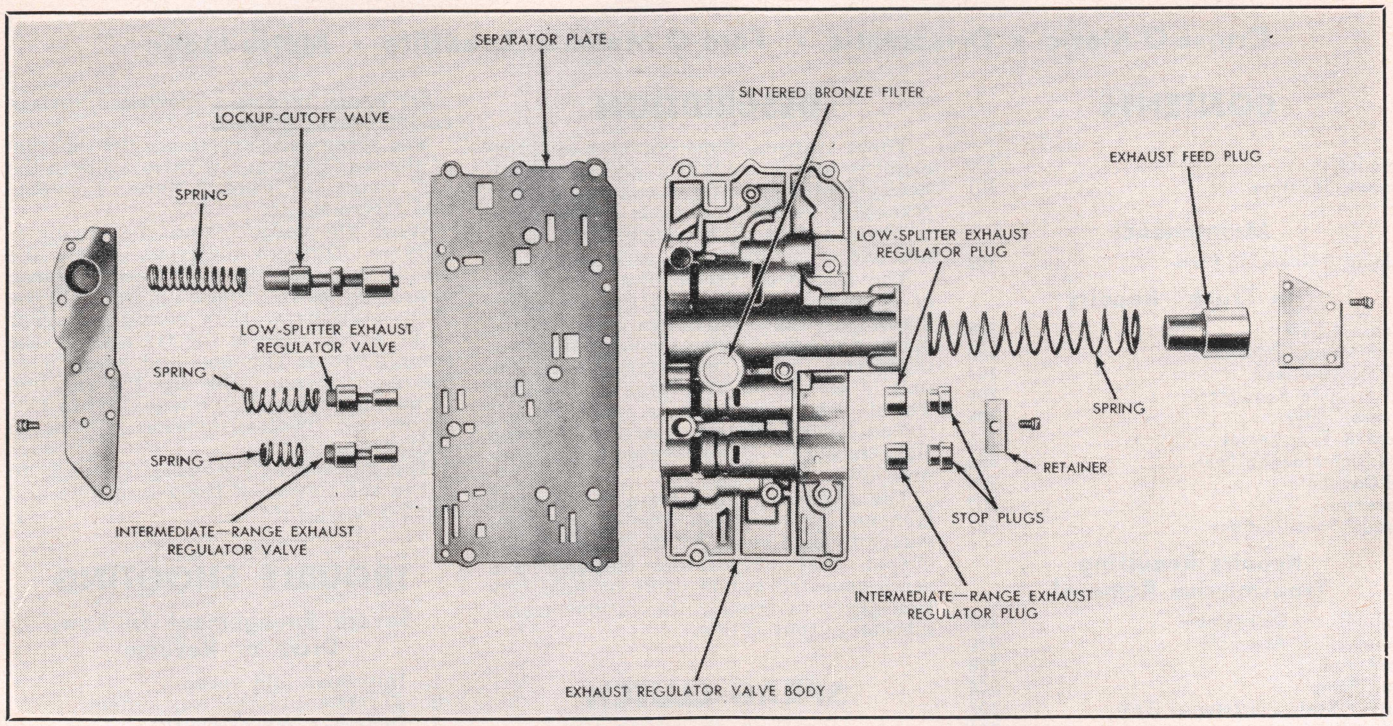

Fig. 36 Exhaust regulator valve body for trucks. See Fig. 31 for school bus

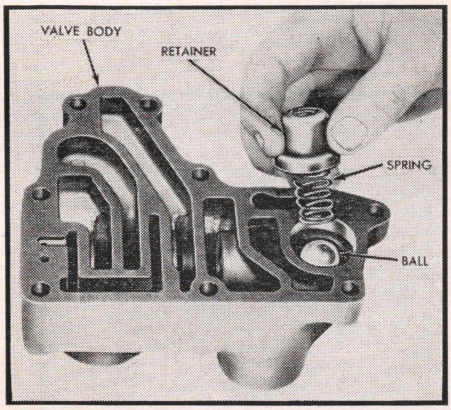

Fig. 37 Lube regulator valve retainer, spring and ball

The range selector valve body must now be checked with a straight edge. Place the straight edge on the surface that mates to the oil transfer plate (only the pump overage should be above the surface). If any of the cover assemblies protrude above this surface, the screws will have to be loosened and the cover shifted to a position below the range selector valve body surface.

Exhaust Regulator Valve

Refer to Fig. 36 when servicing this valve. When disassembled, do not tamper with the bronze exhaust feed filter since the valve body is easily damaged. Wash all parts with cleaning solvent and dry thoroughly with compressed air. Remove nicks or burrs with a fine stone. Replace any cover or casting which is cracked or damaged. Do not sand or polish any radius on valves or plugs as they are made with a sharp edge to prevent dirt from sticking in the valve bore.

All valves and plugs must be installed dry and must move in their respective bores by their own weight. If a valve or plug sticks, remove it and recheck for nicks and burrs. When completely assembled, tighten all screws to a torque of 24-36 inch-lbs.

Hydraulic Retarder Control Valve

1. To disassemble, place the valve body on wood blocks with the mounting surface down. Drive the pin out of the valve body, Fig. 37.
2. Place the valve body on a wood surface with valve pointing up. Then, using a soft hammer and rapid, light blows, drive the valve against the spring in the body.
3. Remove seal, valve and spring from valve body.
4. Loosen the lube regulator valve retainer by tapping lightly around the edge of the retainer. Then remove retainer, spring and steel ball, Fig. 37.
5. Assemble the valve in the reverse order of removal, referring to Fig. 38. The lube regulator valve retainer should be pressed in until the large diameter is flush with the mounting surface to .030″ maximum below the surface of the valve body.
6. Coat the outer shell of the new oil seal with Permatex and start the seal straight into the vlave body. Press the seal in until it is flush with the valve body.
7. After the assembly is completed, the valve must be in its normal position, against the retaining pin, after actuation.

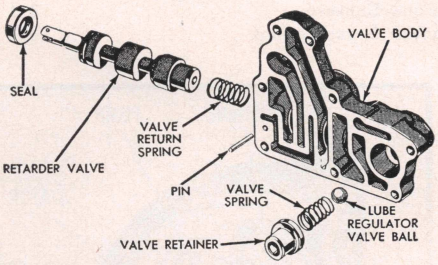

Fig. 38 Hydraulic retarder valve

WARNER AUTOMATIC TRANSMISSION

Cruise-O-Matic • Divcomatic • Ford-O-Matic • Loadflite • Metro-Matic

CONTENTS

PAGE NO.

Description 300
Trouble Shooting 301

Maintenance

Adding & Changing Fluid 302

"In Truck" Repairs

Bands, Adjust 303
Air Pressure Checks 303
Oil Pressure Tests 304
Oil Pressure Regulator 305
Control Valve 305
Front & Rear Servos 306
Extension Housing Seal 306
Oil Distributor 306
Governor 307
Torque Specifications 307

Repairs Requiring Transmission Removal

Transmission, Disassemble 307
Transmission, Assemble 310
Front Pump 308
Rear Pump 308
Output Shaft and Internal Gear 308
Pinion Carrier 308
Center Support 308
Front Clutch 308
Rear Clutch and Primary Sun Gear 310
Transmission Case and Linkage 310
Torque Converter 311
Torque Specifications 307

DESCRIPTION

These transmissions combine a three-element torque converter and a hydraulically-controlled three-speed and reverse planetary gearbox, Figs. 1, 2. The drive is always through the torque converter and one of the planetary gear ranges.

The torque converter, Fig. 3, consists of an impeller (pump), a turbine and a stator. All these parts are enclosed and operate in a fluid-filled housing. When an aluminum torque converter is used the unit is air cooled by means of the fins. The steel torque converter, when used, is cooled by circulating the transmission fluid through a cooler located in the radiator lower tank.

The planetary gear train in all units transmit power from the torque converter turbine shaft to the transmission output shaft. Hydraulic clutches and servo-operated bands drive or hold certain gears to provide the various transmission output ratios.

SPRAG CLUTCH

Dual Range Units

The sprag clutch, Fig. 4, is incorporated in the pinion carrier on dual range transmissions, such as the Cruise-O-Matic. The outer race is fitted in the pinion carrier and is held in place by a snap ring. The inner sprag race is a machined surface on the center support.

The sprag clutch performs the function of the rear band in low ratio while in the "D" range on Ford-O-Matic, Loadflite and Metro-Matic.

When the torque from the engine is delivered through the front clutch, the torque reaction of the one-way sprag clutch causes it to lock up and hold the drum stationary, thus giving low gear ratio. At the time of the 1-2 upshift, the front servo is engaged and as soon as the front band picks up the reaction torque, the sprag clutch will start to free wheel and the transmission will be in second gear ratio.

The purpose of the sprag clutch is to aid in the timing of the 1-2 upshift and the 2-1 downshift.

TROUBLE SHOOTING

Severe Engagement In Low, Drive or Reverse

1. Improper idle speed.
2. Throttle linkage adjustment.
3. Incorrect oil pressure.
4. Defective valve body.
5. Oil pressure regulator.
6. Rear Band Adjustment.

Rough Start In Reverse

1. Improper idle speed.

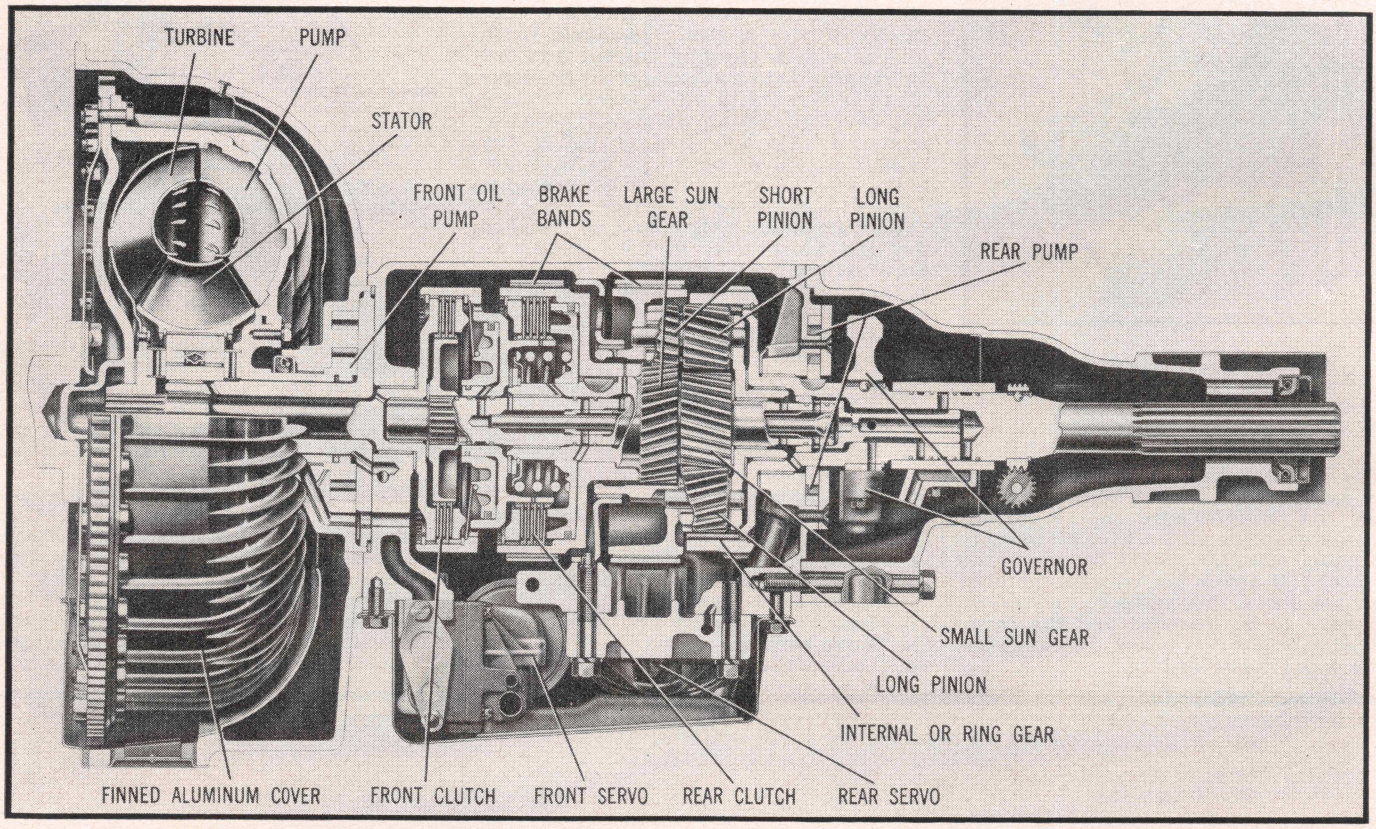

Fig. 1 Sectional View of Transmission With Air-Cooled Torque Converter

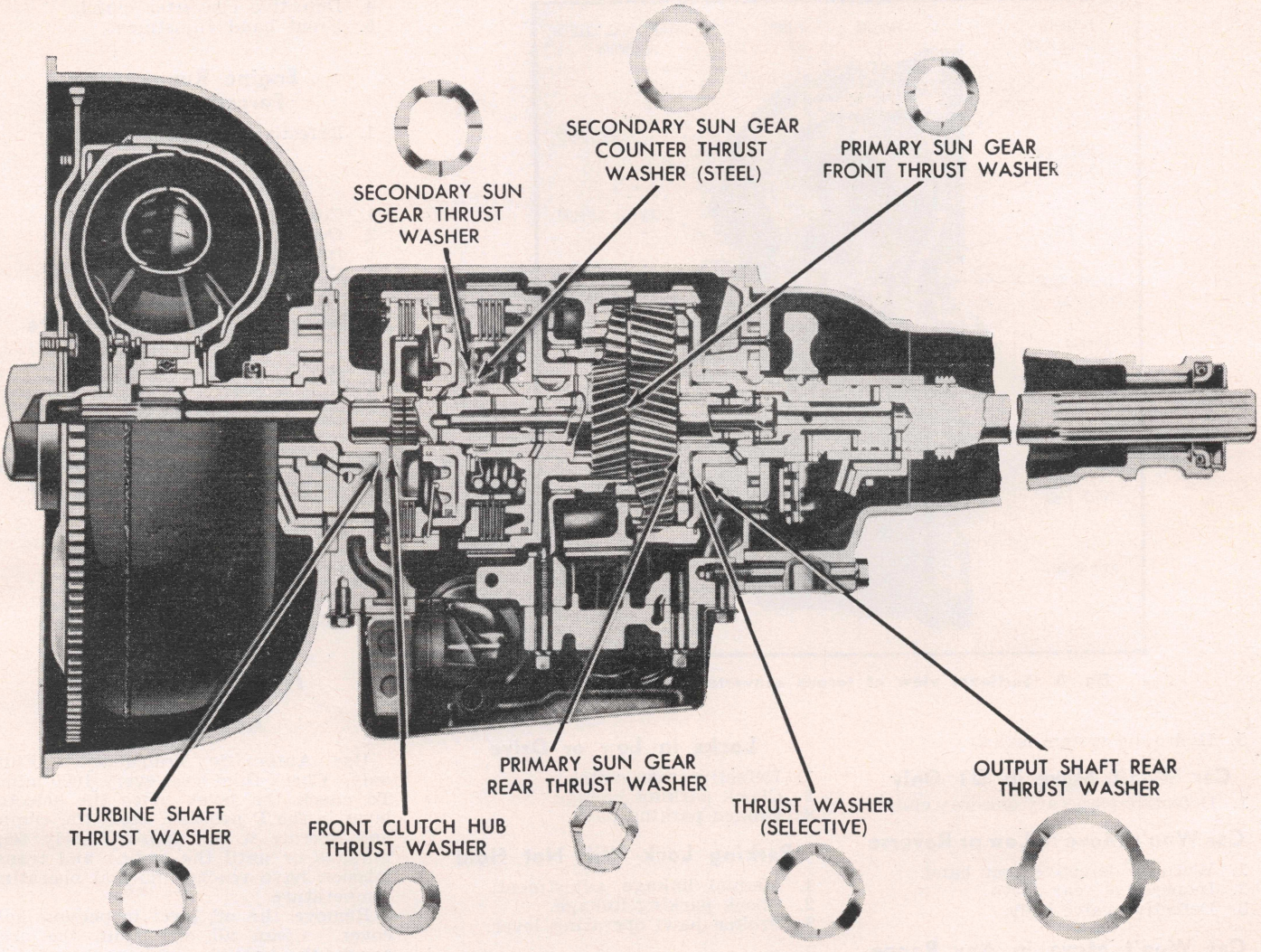

Fig. 2 Transmission thrust washer locations

2. Throttle linkage adjustment.
3. Incorrect oil pressure.
4. Defective valve body.
5. Oil pressure regulator.
6. Rear band adjustment.

Shift Points From 1-2 and 2-3 Too High, Too Low or Erratic

1. Throttle linkage adjustment.
2. Defective governor.
3. Defective valve body.
4. Leakage in hydraulic system.

Severe Shift from Intermediate to Drive

1. Throttle linkage adjustment.
2. Front band adjustment.
3. Defective valve body.
4. Defective front servo.
5. Oil pressure regulator.

Engine Races from Intermediate to Drive

1. Throttle linkage adjustment.
2. Defective valve body.
3. Hydraulic system leaks.

No Downshift from Drive to Intermediate when Accelerator is Depressed

1. Throttle linkage adjustment.
2. Improper oil pressure.
3. Defective valve body.

Severe Shift from Drive to Intermediate with Throttle Closed

1. Throttle linkage adjustment.
2. Improper idle speed.
3. Defective valve body.

Excessive Creeping

1. Engine idle speed too high.

Slippage or Chatter in Intermediate

1. Throttle linkage adjustment.
2. Front band adjustment.
3. Improper oil pressure.
4. Defective valve body.
5. Oil pressure regulator.
6. Defective front servo.
7. Defective front clutch.
8. Hydraulic system leaks.

Slippage or Chatter in Low

1. Throttle linkage adjustment.
2. Rear band adjustment.
3. Improper oil pressure.
4. Defective valve body.
5. Oil pressure regulator.
6. Defective rear servo.
7. Defective front clutch.
8. Hydraulic system leaks.

Slippage or Chatter in D1 Only

1. Defective planetary one-way clutch.

Slippage or Chatter in Reverse

1. Throttle linkage adjustment.
2. Rear band adjustment.
3. Improper oil pressure.
4. Defective valve body.
5. Oil pressure regulator.
6. Defective rear servo.
7. Defective rear clutch.
8. Hydraulic system leaks.

Car Won't Move in D or D2

1. Front band adjustment.
2. Defective valve body.
3. Defective front servo.
4. Defective front clutch.

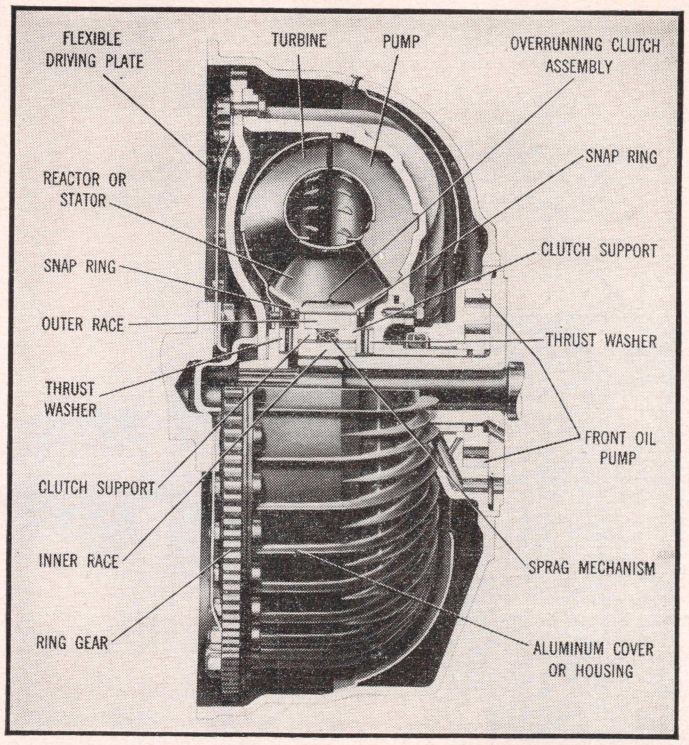

Fig. 3 Sectional view of torque converter (air-cooled)

5. Hydraulic system leaks.

Car Won't Move in D1 Only

1. Defective planetary one-way clutch.

Car Won't Move in Low or Reverse

1. Worn or defective rear band.
2. Inoperative rear servo.
3. Defective valve body.

Car Won't Move in Any Range

1. Low oil level.
2. Broken parking lock.
3. Defective valve body.
4. Oil pressure regulator.
5. Hydraulic system leaks.
6. Broken converter hub.

Locks In Reverse

1. Defective front clutch.
2. Check parking linkage.
3. Front band applied.

Locks in Low or Drive

1. Defective rear clutch.
2. Check parking linkage.
3. Broken parking pawl.

Parking Lock Will Not Hold

1. Manual linkage adjustment.
2. Check parking linkage.
3. Broken pawl operating lever.

Engine Won't Rotate When Car is Pushed

1. Oil pressure regulator.
2. Defective rear oil pump.
3. Hydraulic system leaks

Transmission Overheats

1. Restricted converter cooling air passage.
2. Rear band adjustment.
3. Oil pressure regulator.
4. Defective converter clutch.
5. Front band adjustment.

Engine Runaway on Forced Downshift

1. Defective valve body.

Noise in Neutral

1. Converter cover bolts striking.
2. Defective front pump.
3. Interference in converter.
4. Check parking linkage.

Noise in Low, Intermediate or Reverse

1. Defective planetary assembly.
2. Defective front clutch.
3. Defective rear clutch.

Noise when Coasting in Neutral at 20-30 MPH, Engine off

1. Defective rear pump.

Noise in Converter

1. Converter cover bolts striking.
2. Interference in converter.

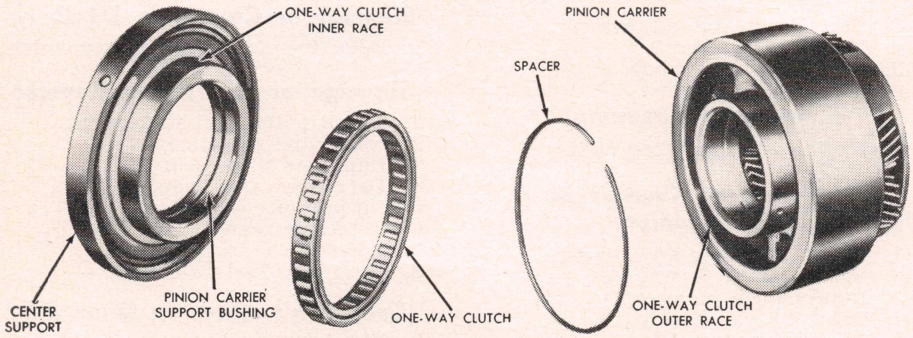

Fig. 4 Pinion carrier, sprag clutch and center support used on dual-range units such as Cruise-O-Matic

MAINTENANCE

Adding Fluid

Use Automatic Transmission Fluid only. Check fluid level every 1000 miles. To check the level, place the selector lever in the P position. Start the engine and operate it for approximately four minutes or until the engine and transmission have reached normal operating temperature.

Remove the oil level inspection hole cover. Clean all dirt from the area around the dipstick. Apply parking brake and foot brake. Move selector lever slowly from P to R and then to D. Remove the dipstick, wipe clean, install in transmission and turn clockwise to the lock position. Remove the dipstick again and note the amount of fluid registered. Add fluid through the dipstick hole to bring the fluid level to the FULL mark on the dipstick.

Changing Fluid

The transmission fluid should be changed at 24,000-mile intervals. The procedure is as follows:

1. Remove cover from lower front side of converter housing.
2. Remove one of the converter drain plugs. Then rotate the converter 180 deg. and remove the other plug. *Do not attempt to turn the converter with a wrench on the converter stud nuts as there is danger of stripping threads as well as skinning your knuckles on the bell housing.*
3. When all fluid has drained, remove and clean the oil pan and screen.
4. Using a new pan gasket, install screen and pan.
5. Connect filler tube to oil pan and tighten fitting securely.
6. Install both converter drain plugs.

7. Install converter housing cover.
8. Install 5 quarts of Automatic Transmission Fluid.
9. Run engine at idle speed for about 2 minutes; then add the additional quantity of oil required for the particular transmission being serviced.
10. Run engine at a fast idle until it reaches normal operating temperature.
11. Shift the transmission through all postions; then place it at P and check fluid level. If necessary, add enough fluid to bring the level to the F mark on the dipstick.

"In Truck" Repairs

BAND ADUSTMENTS

The front and rear band of the transmission should be adjusted at 15,000 mile intervals or as operation of the transmission indicates.

Front Band

The tool shown in Fig. 5 is especially made for this adjustment. However, by using a piece of ¼" wide metal block and an ordinary end or box wrench a satisfactory adjustment can be made.

With transmission oil pan removed, back off adjusting screw lock nut and screw far enough to permit the ¼" metal block to be inserted between servo piston rod and adjusting screw. Turn screw with wrench until it contacts metal block. Then tighten adjusting screw a little more (equivalent to 10 inch lbs.) and back off one turn.

Rear Band

The tool shown in Fig. 6 is especially made for this adjustment. However, a satisfactory adjustment may be made by using a conventional torque wrench. Loosen lock nut and tighten adjusting screw to a torque of 10 lb. ft. Then back off the screw 1½ turns and tighten lock nut.

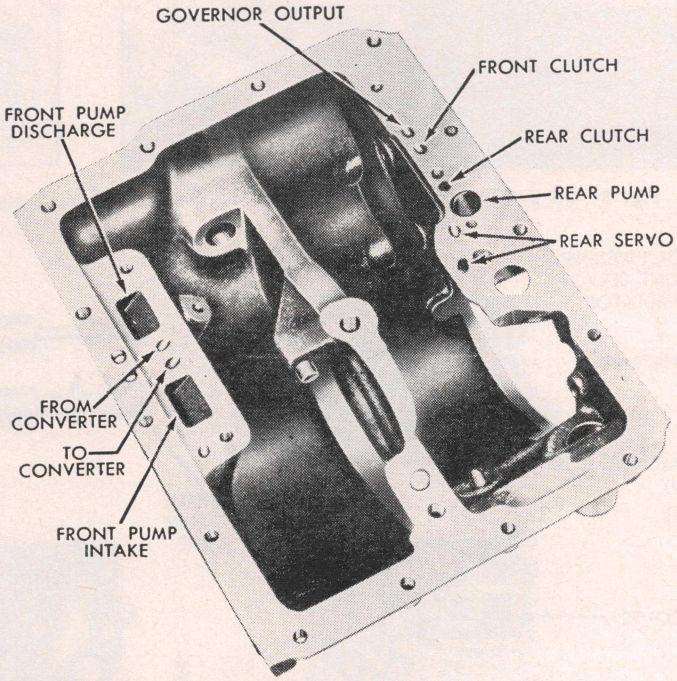

Fig. 7 Transmission case fluid passages

AIR PRESSURE CHECKS

A series of air pressure tests can be made on the transmission with the unit in the car. These tests are helpful in determining if clutches, bands and servos are operating in a normal manner.

To make the tests, drain the fluid from the transmission. Remove the transmission oil pan, screen and control valve assembly. The front servo tubes should remain in the front servo and the attaching screw must be tight. *When making tests, hold a clean towel over the transmission opening to prevent excessive oil spray.* Refer to Fig. 7 for oil passage locations.

Front Clutch

Apply air pressure to the front clutch passage. Listen for a dull thud which indicates the clutch is operating. Keep air pressure in the passage for several seconds to check for leaks in this circuit.

Governor Valve

Remove the governor inspection hole cover and apply air pressure to the front clutch passage. Listen for a click and watch the valve snap inward.

Rear Clutch

Apply air pressure to the rear clutch passage. Listen for a dull thud which indicates the clutch is operating. Keep air pressure in the passage for several seconds to check for leaks in this circuit.

Front Band and Front Servo

Apply air pressure to the front servo apply tube and observe band application.

Rear Band and Rear Servo

Apply air pressure to the rear servo and observe band application.

Results of Tests

If servos, bands, clutches and governor operation is normal with air pressure, the condition of *no drive, erratic upshifts or downshifts* points to the control valve assembly and pressure regulator valve. These should be disassembled, cleaned and inspected.

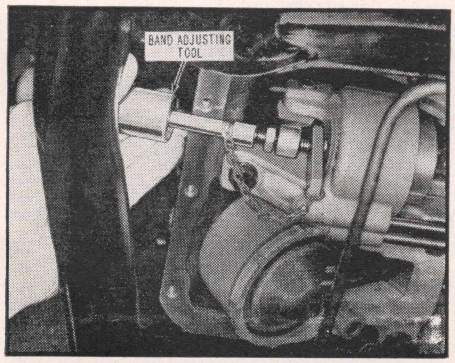

Fig. 5 Adjusting front band

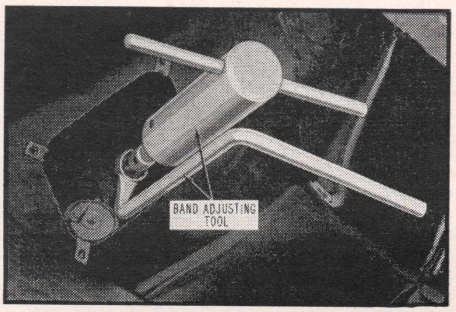

Fig. 6 Adjusting rear band

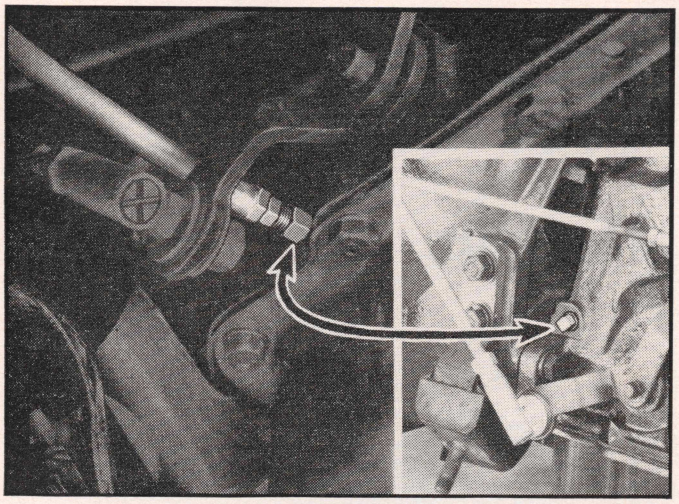

Fig. 8 Oil pressure test take-off point

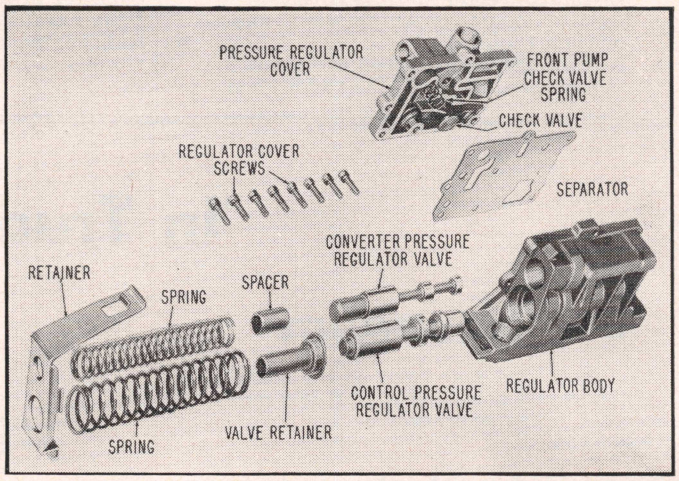

Fig. 9 Oil pressure regulator. 1955-59 single-range units

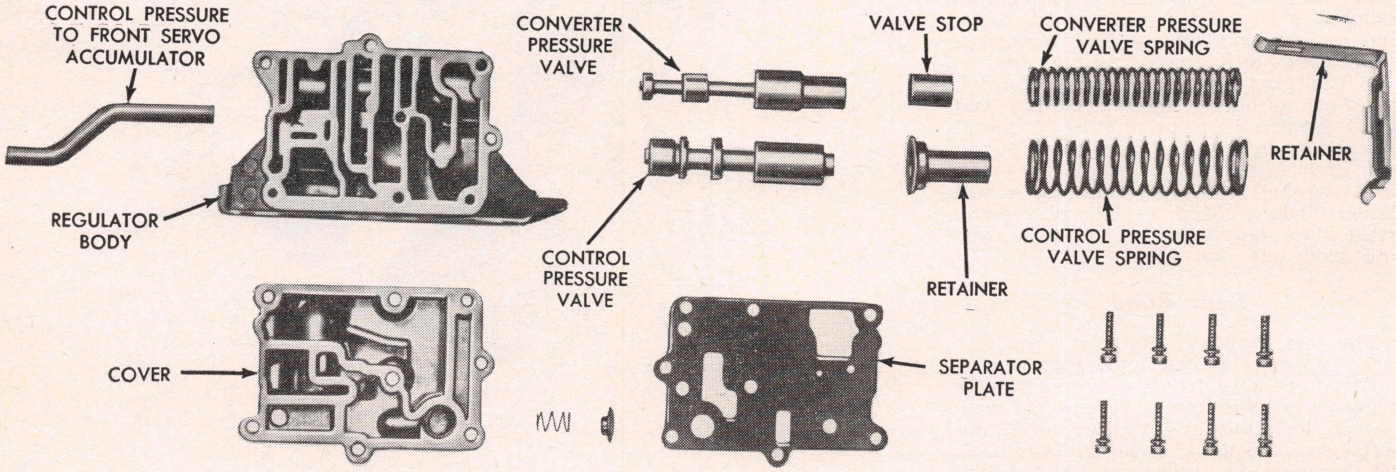

Fig. 10 Oil pressure regulator. 1958-59 Dual-Range units

OIL PRESSURE TESTS

The oil pressure tests should be performed to ascertain whether or not the pressure regulator system is functioning correctly and to determine if there is fluid leakage in the clutch circuits.

Remove the ⅛" pipe plug, Fig. 8, and install a pressure gauge. The gauge should be placed in the driver's compartment where it can be observed by the operator. Connect a tachometer to the engine where it can also be read by the operator. Then perform the following tests:

Idle Pressure Test

Start engine and operate until engine and transmission reaches normal operating temperature. With engine at idle speed, move the selector lever to D, L and R positions. The pressure gauge should read approximately 50 to 80 lbs. in all ranges.

If the pressure is low in any one range, an oil leak in that range circuit is indicated and must be corrected. If the pressure is high the throttle linkage should be checked and adjusted as outlined in the *Truck Chapter*.

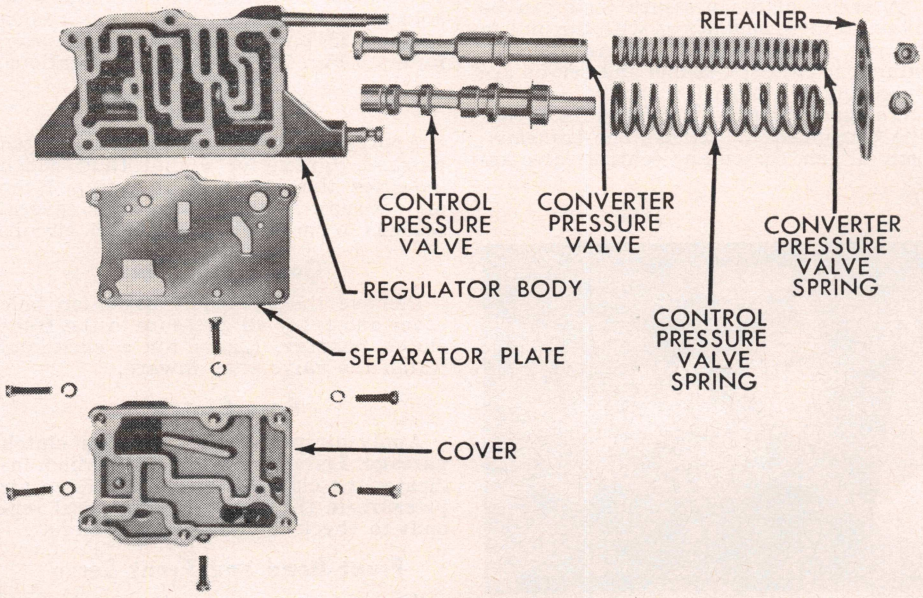

Fig. 11 Oil pressure regulator. 1954 and earlier units

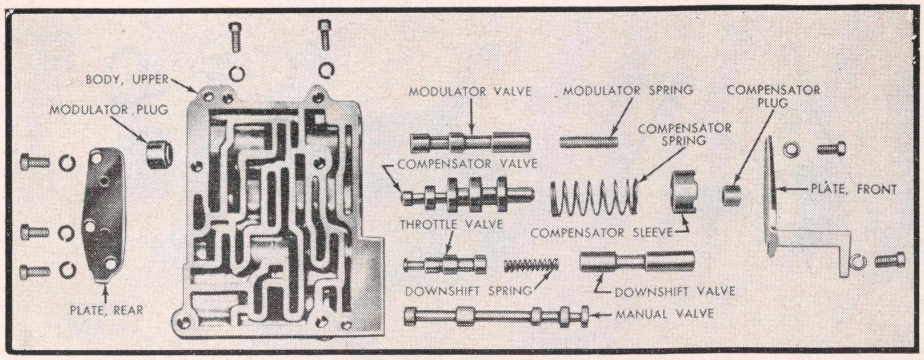

Fig. 12 Control valve body (upper). 1954 and earlier units

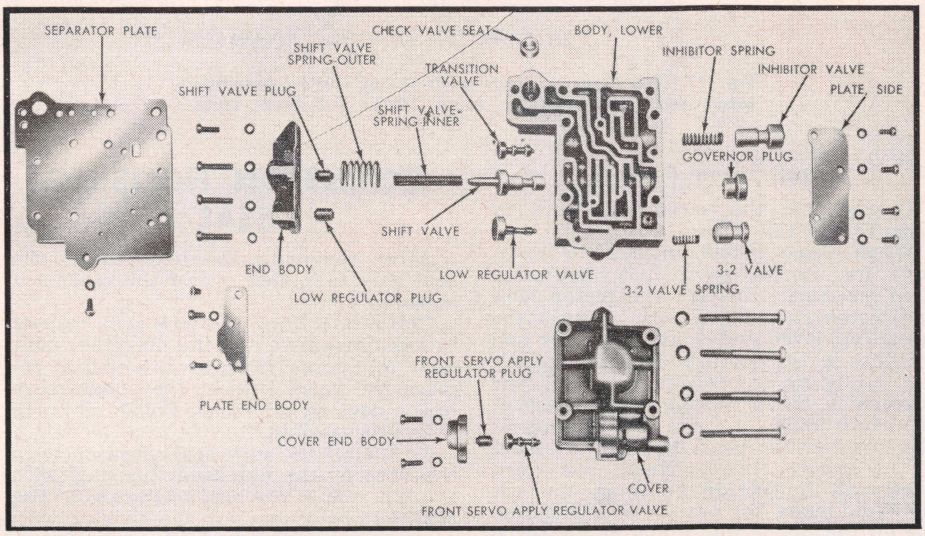

Fig. 13 Control valve body (lower). 1954 and earlier units

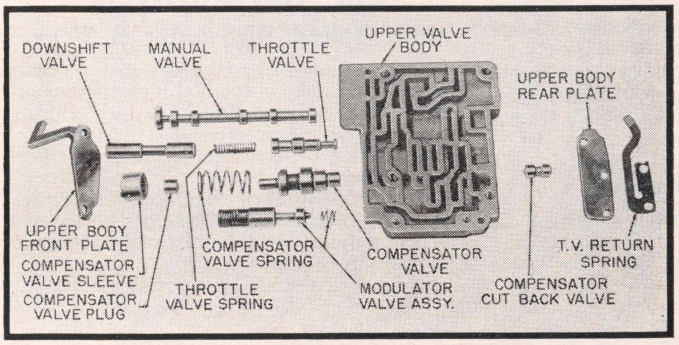

Fig. 15 Control valve body (upper). 1955 and later single-range units

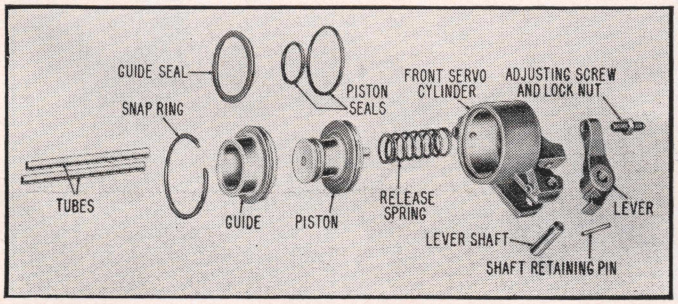

Fig. 16 Front servo. 1955 and later single-range units

Pressure Regulator Check

Move the selector lever to the D range and firmly set the hand and foot brakes. Run the engine at 1000 rpm and read the pressure gauge. If the reading is less than 80 lbs. or more than 85 lbs. it indicates the throttle valve linkage must be readjusted. If the pressure is greater than 85 lbs. it indicates the throttle valve linkage is too short and must be readjusted.

Stall Pressure Tests

Firmly set the hand and foot brakes and operate the engine at full kickdown position. Move the selector lever to D, L and R ranges and read the pressure gauge. The pressure in the D and L positions should be 130 to 175 lbs., and 170 to 190 lbs. in the R range.

If the pressure is not within specified limits, malfunctioning of the throttle valve, modulator valve, compensator valve, or pressure regulator assembly is indicated and it will be necessary to remove and clean the control valve assembly and pressure regulator valve assembly.

OIL PRESSURE REGULATOR

Remove oil pan and screen. Maintain constant pressure on the spring retainer to prevent damage to springs and remove retainer from bosses on oil pressure regulator body. Remove springs and pilots. Remove the three pipes. Unfasten and remove the oil pressure regulator from the transmission case.

Disassemble the unit as shown in Figs. 9, 10, 11. After cleaning and inspecting parts, assemble the unit and tighten the regulator attaching bolts.

CONTROL VALVE

To remove the assembly, loosen the adjustments on the front and rear bands 5 or 6 turns. Loosen front servo attaching screws. Remove cap screws and washers which attach control control valve to case. Align throttle and manual levers to permit removal of control valve.

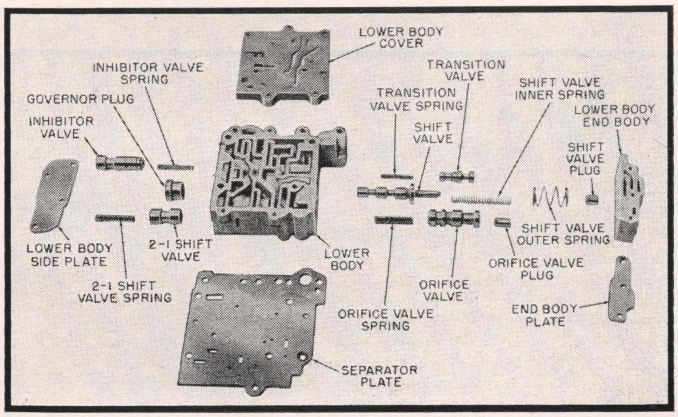

Fig. 14 Control valve body (lower). 1955 and later single-range units

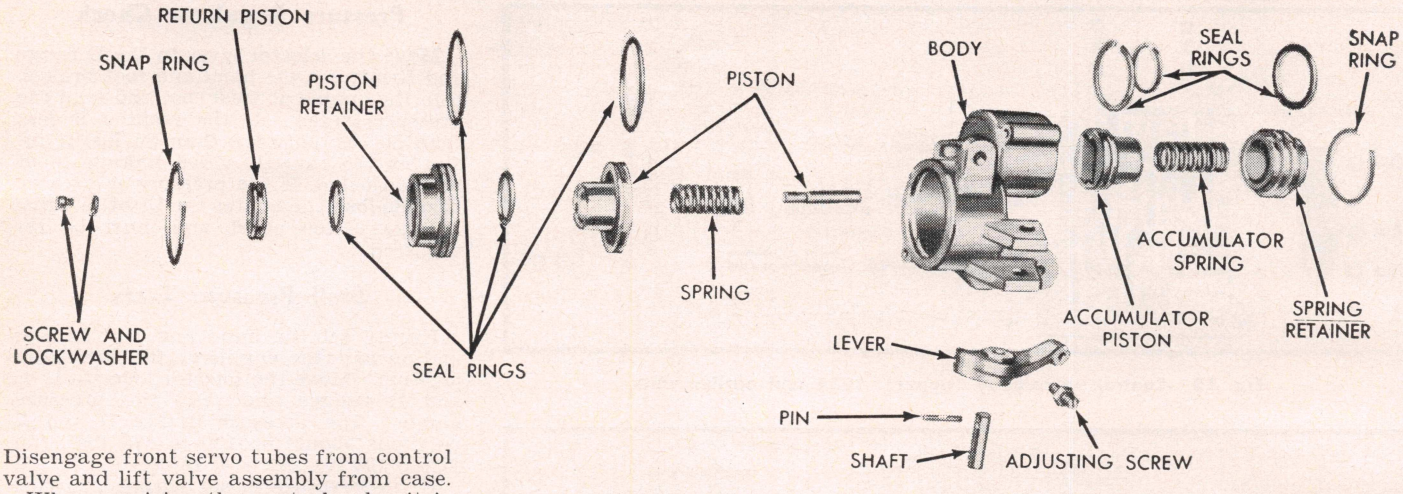

Fig. 17 Front servo. Units with sprag clutch. Accumulator units not used on some 1961 and later units

Disengage front servo tubes from control valve and lift valve assembly from case.

When servicing the control valve it is recommended that each valve body of the assembly be disassembled, cleaned, inspected and reassembled one at a time. To aid in reassembly, it is also recommended that the parts of each body be placed on a clean bench in the order in which they are removed from the body.

Disassemble and assemble the unit as illustrated in Figs. 12 to 15.

When disassembled, clean all parts in each valve body thoroughly with solvent and blow dry with moisture-free compressed air. Inspect all valves and valve bores for scores and burrs. Check all fluid passages for obstructions. Inspect all mating surfaces for burrs or distortion. Inspect all springs for distortion.

Crocus cloth may be used to polish valves and plugs. However, care must be taken to avoid rounding the sharp edges of valves and plugs. Check all valves and plugs for freedom of movement in their respective bores. Valves and plugs, when dry, should fall from their own weight in their respective bores.

FRONT & REAR SERVOS

To remove the front servo, remove the cap screw which holds it to the case. Hold the actuating lever strut with one hand and lift the servo from the case.

To remove the rear servo, take out the attaching cap screws. Then hold the anchor strut and lift the servo from the case.

Front Servo Repairs

Disassemble the servo as shown in Figs. 16 and 17.

When disassembled, inspect the servo body for cracks, burrs and obstructed fluid passages. Inspect the piston bore and piston stem for scores. Inspect the actuating lever and shaft for wear and freeness in the servo body. Also inspect the adjusting screw threads and the threads in the actuating lever. Inspect the servo band for wear and bonding of the lining to the band. Replace the band if the grooves in the lining are worn even with the rest of the lining. Inspect the band ends for cracks or distortion. Install the piston and guide in the servo body and check for freedom of travel.

Minor burrs may be removed with crocus cloth. However, parts showing deep burrs, scores, scratches or excessive wear should be replaced.

Lubricate all parts with automatic transmission fluid before starting reassembly. Then assemble the unit as shown in Figs. 16 and 17.

Rear Servo Repairs

Disassemble the servo as shown in Figs. 18 and 19. Inspect the parts for the same conditions outlined for the front servo.

EXTENSION HOUSING SEAL

After removing the drive shaft, the seal may be pulled out of the extension housing.

Before installing the new seal, inspect the sealing surface of the universal joint yoke for scores. If scores are evident replace the yoke. Inspect the counterbore in the housing for burrs. Polish all burrs with crocus cloth.

To install the new seal, position it in the bore of the extension housing with the felt side of the seal to the rear. The seal may be driven into the housing with a special tool designed for the purpose.

OIL DISTRIBUTOR

With Bolted Distributor & Sleeve

After removing the extension case remove the spacer from the transmission output shaft and slide the distributor toward the rear of the transmission. Note that the tube spacer is located in the center tube.

Remove the three tubes and spacer from the distributor. Remove the screws which attach the distributor to the sleeve and separate these parts.

Inspect the distributor and sleeve for

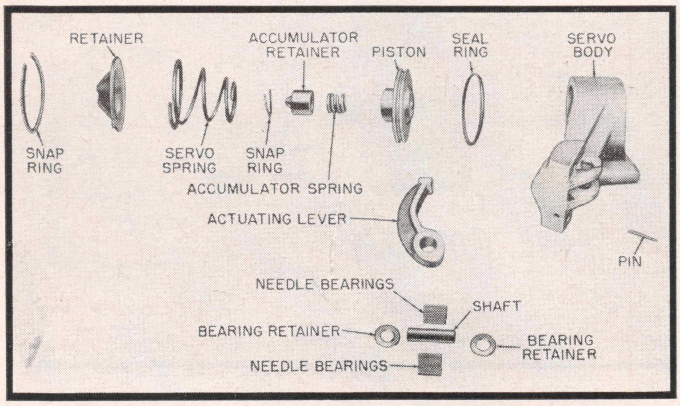

Fig. 18 Rear servo. 1955 and later units

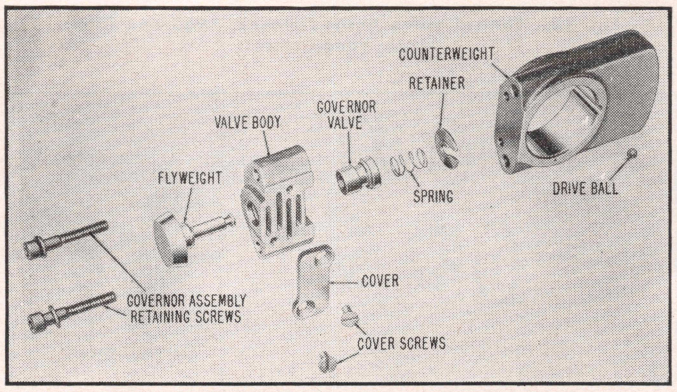

Fig. 20 Layout of governor parts

burrs on the mating surfaces and for obstructed fluid passages. Check the fit of the tubes in the distributor. Inspect the distributor sleeve for wear and scores in the sleeve bore.

To assemble, align the distributor and sleeve and install the cap screws. Install the tubes in the distributor with the spacer installed on the center tube.

With One Piece Distributor & Sleeve

After removing the extension housing, remove the distributor drive gear snap ring. Remove distributor gear, taking care not to lose the gear drive ball. Remove distributor sleeve and pipes from the transmission. Inspect the seal rings on the output shaft for wear or breakage, and replace if necessary. Inspect the distributor sleeve for wear and the tubes for proper alignment and fit into the distributor sleeve.

With tubes installed in the distributor sleeve, install distributor on output shaft (chamfer forward) sliding the distributor over the seal rings and at the same time guiding tubes into the case. Install speedometer drive ball and gear and install snap ring.

GOVERNOR

Remove the governor inspection cover from the extension housing. Rotate the drive shaft to bring the governor body in line with the inspection hole. Remove the two screws which attach the governor body to the counterweight and remove the body.

Remove the valve from the new governor body. Lubricate the valve with automatic transmission fluid. Install the valve in the body, making sure the valve moves freely in the bore. Install the body in the counterweight with the side plate forward. Be sure the fluid passages in the counterweight and body are aligned. Fig. 20 illustrates the entire governor assembly.

TORQUE SPECIFICATIONS

Location of Parts	Ft. Lbs.
Converter cover to impeller bolts	15-28
Converter to drive plate screws	23-28
Converter to flywheel nuts	15-28
Converter housing to case bolts	35-45
Distributor-to-sleeve screws	8-10
Front pump to case bolts	17-22
Front servo to case bolts	30-35
Rear servo to case bolts	40-45
Planetary support to case screws	20-25
Upper to lower valve body bolts	4-6
Valve body to case bolts	8-10
Pressure regulator to case screws	17-22
Extension housing to case bolts	28-33
Oil pan to case bolts	10-13
Rear band adjusting screw locknut	35-40
Front band adjusting screw locknut	20-25
Front pump cover screws	25-35①
Rear pump cover screws (¼-20)	80-90①
Rear pump cover screws (10-24)	25-35①
Governor cover screws	50-60①
Converter housing to engine bolts	40-50
Governor valve body to counterweight screws	50-60①
Governor valve body cover screws	20-30①
Pressure regulator cover studs and nut②	40-50①
Pressure regulator cover screws	20-30①
Control valve body screws	20-30①
Vacuum diaphragm unit in case③	20-30

①—Inch pounds. ②—Single range units. ③—Dual range units.

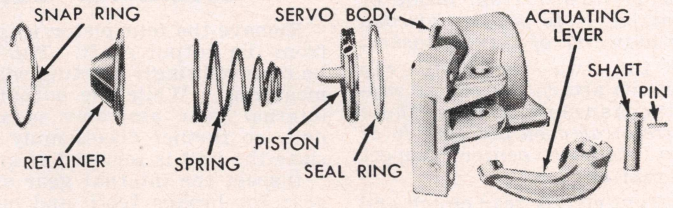

Fig. 19 Rear servo. 1954 and earlier units

Repairs Requiring Transmission Removal

TRANSMISSION, DISASSEMBLE

1. Remove pressure regulator valve, vacuum diaphragm unit and push rod (if used), control valve assembly and both servos as outlined previously.
2. The next step is to check the mainshaft end play for future reference when reassembling the transmission. Remove one of the front pump retaining screws and mount a dial indicator so that the indicator button rests against the end of the input shaft. Use a large screwdriver to pry the front clutch to the rear and, while holding pressure against the screwdriver, zero the dial indicator. Insert the screwdriver between the parking gear and transmission case and pry the units toward the front of the case. *If end, play is not within the limits of .010" and .029", record the amount of end play present so that a suitable thrust washer may be installed to establish the correct end play when the transmission is reassembled.*
3. Unfasten and remove the front pump from the transmission case.
4. Remove extension housing and oil distributor.
5. Remove the oil distributor sleeve from the output shaft. Slip the four seal rings from the shaft. Remove the governor snap ring and slide off

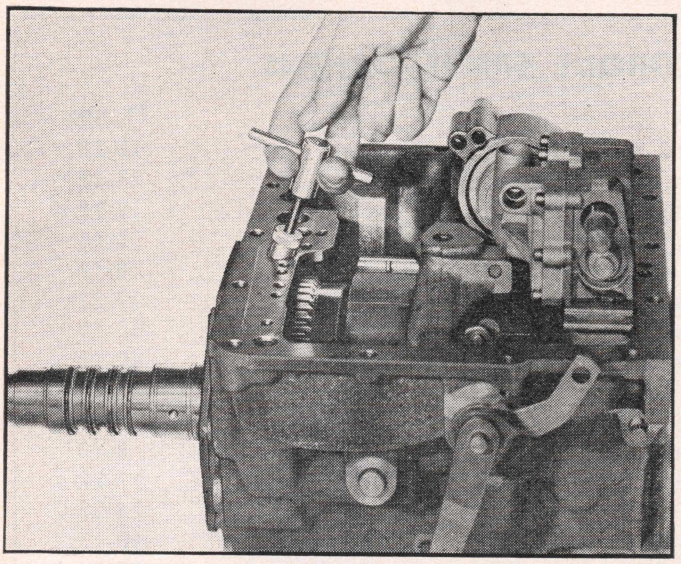

Fig. 21 Removing rear pump discharge tube

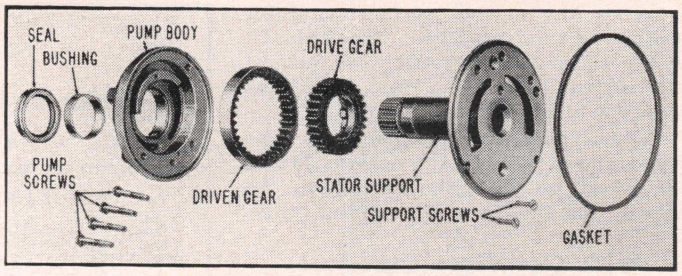

Fig 23. Front pump assembly

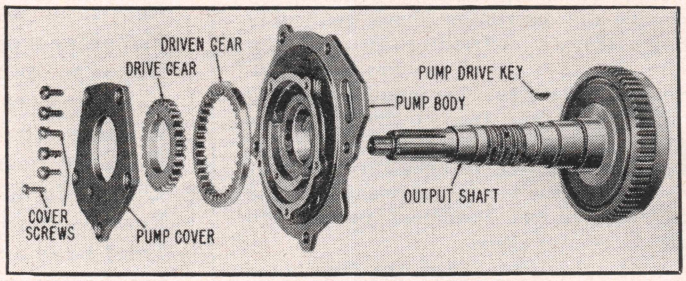

Fig 24. Rear pump assembly

the governor, being sure not to lose the governor drive ball.

6. Remove rear pump inlet tube. Using tool shown in Fig. 21, remove outlet tube. Slide pump off output shaft and remove gasket and rear pump drive key, Fig. 22.
7. Hold pinion carrier in position and slide output shaft and internal gear toward rear of transmission. Remove thrust washer from pinion carrier. *This washer, supplied in various thicknesses, determines the end play of the mainshaft assembly.*
8. Hold pressure against primary sun gear shaft and remove pinion carrier by sliding toward rear of case. Remove thrust washer from inside of pinion carrier. *Note position of cone on inner diameter of thrust washer.*
9. Remove the two remaining cap screws which attach the center support to the transmission case. *These screws are located on the outside of the case.* Remove center support through rear of case.
10. Remove front clutch, rear clutch and sun gears as a unit. Remove the thrust washer from in front of the front clutch. Separate front and rear clutches and remove thrust washer and contour thrust washer from between clutches.
11. Remove and tilt front band and remove through bottom of case.

FRONT PUMP

When disassembled, inspect the pump body for excessive wear and scores. Inspect the internal and external tooth gears for scores, scratches and excessive wear. Inspect the stator support face for scores, scratches nad excessive wear.

Minor scratches and scores can be removed with crocus cloth. However, parts showing deep scratches, scores or excessive wear should be replaced.

Assemble the pump as shown in Fig. 23. Tighten the stator support attaching screws.

REAR PUMP

Before disassembling the pump, Fig. 24, mark the external and internal tooth gears with crayon or pencil to aid in reassembly. When disassembled, inspect all parts for wear or damage as outlined for the front pump.

When reassembling the pump, position the gears in the body with the marks made previously in the upward position.

OUTPUT SHAFT & INTERNAL GEAR

Remove the four piston ring type seals from the output shaft. The rings must be removed singly starting with the rearmost ring. While the output shaft and internal gear assembly is a two-piece unit, no further disassembly is required since the unit is serviced as an assembly.

Inspect the internal gear and parking gear for broken teeth and burrs on the thrust surfaces. Inspect the output shaft for burrs and scores on the bearing surfaces and ring grooves. Inspect the rear pump drive keyway and governor drive ball socket for wear.

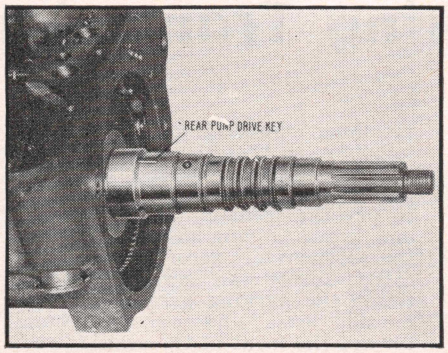

Fig. 22 Location of rear pump drive key

Minor burrs and scratches may be removed with crocus cloth. However, parts having broken teeth, large burrs, scratches or scores, or showing evidence of wear should be replaced.

Install the four seal rings on the output shaft, starting with the foremost ring and working toward the rear.

PINION CARRIER

The pinion carrier is serviced as an assembly; therefore, there is no disassembly or assembly procedure. To check its serviceability, however, inspect the band surface and the inner and outer bushings for scores. Rotate the pinions on their shafts to check for freedom of movement and inspect for worn and broken teeth. Use a feeler gauge to check pinion end play which should be .010″ to .020″. Inspect pinion shaft for tightness to the pinion carrier.

CENTER SUPPORT

The center support is serviced only as an assembly. To check its serviceability, however, inspect for burrs or distortion, and the bearing surface for scores and scratches.

Minor burrs and scratches may be removed with crocus cloth. Any damage more serious than that requires replacing the support.

FRONT CLUTCH

Service Note

The number and type of clutch plates vary with vehicle make, model and engine. Be sure to obtain the correct clutch pack for the application being serviced.

Disassemble, Fig. 25, 25A

1. Remove clutch cover snap ring.

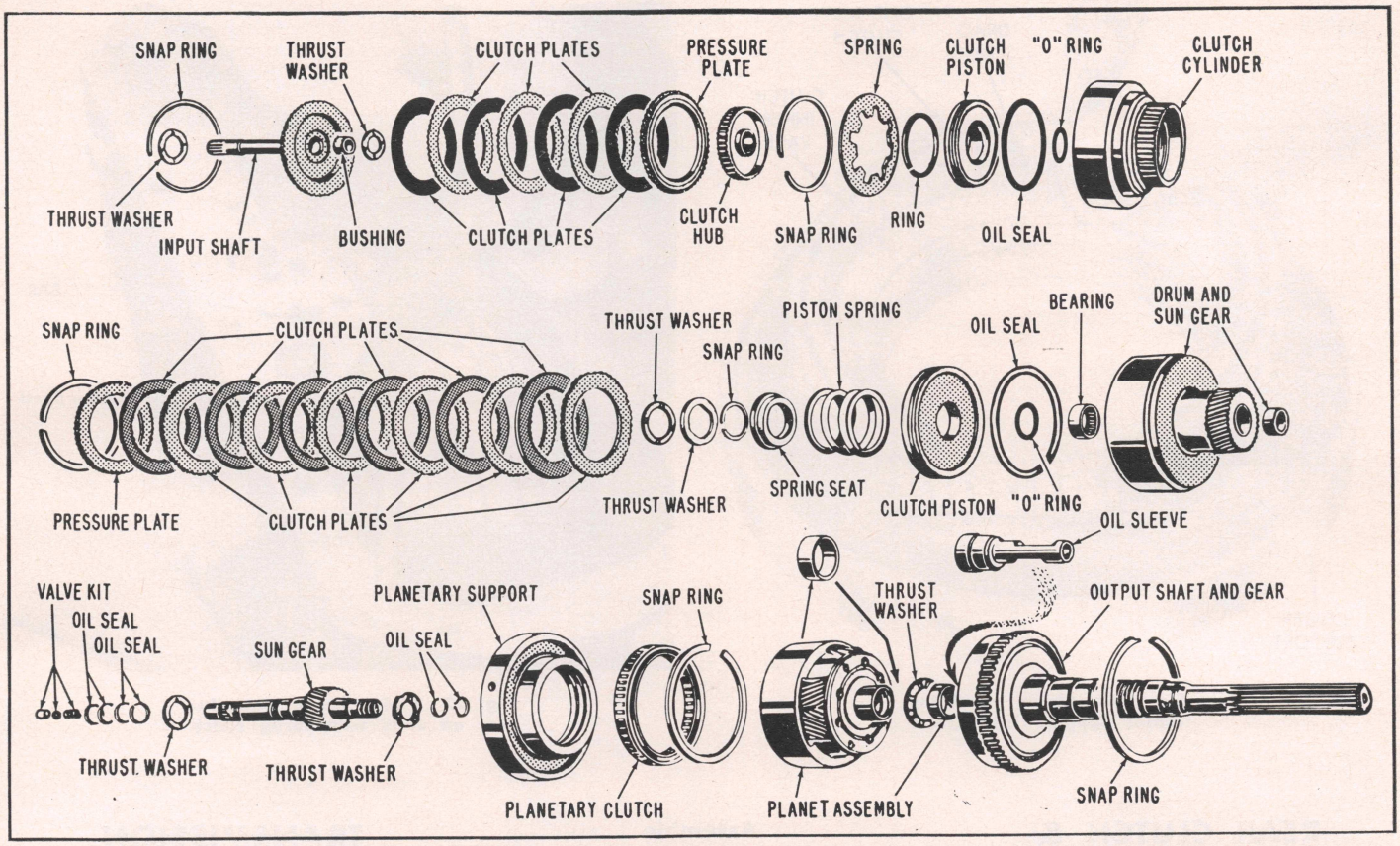

Fig. 25A Front and rear clutches and related parts for dual range units

2. Remove turbine shaft and fiber thrust washer from clutch hub.
3. Remove plates and clutch hub from drum; also clutch pressure plate.
4. Using a suitable spring compressor on clutch release spring, exert sufficient pressure to compress spring and remove snap ring.
5. Remove tool and clutch spring.
6. Apply air pressure to clutch inlet hole to force clutch piston out of clutch drum bore.
7. Remove rubber outer piston seal from piston and remove piston metal wear ring from piston.
8. Remove O-ring seal from clutch drum.

Inspection

1. Inspect turbine shaft and clutch hub for burrs on thrust surfaces, splines and serrations.
2. Inspect clutch piston for burrs, scores or cracks.
3. Inspect clutch drum for burrs on thrust surfaces and splines, and clutch bore for scratches and scores.
4. Inspect clutch release spring for cracks or distortion and pressure plate for cracks and scratches.
5. Inspect steel plates for burrs on serration and for wear, and for flatness.
6. The lined plates should be replaced when grooves in lining are no longer visible, as if plates are warped.

Assemble

1. Lubricate all parts with transmission fluid before assembly.
2. Install new O-ring seal in clutch drum and a new seal on clutch piston and install piston in clutch drum bore.
3. Press piston down lightly until it bottoms in bore, being careful not to damage outer piston seal.
4. Install metal wear ring on piston.
5. Install clutch spring on piston with concave side upward.
6. Position compressor tool on spring and exert sufficient pressure to compress spring so that snap ring can be installed. Use the thicker snap ring.
7. Remove compressor and install pressure plate with smooth side upward.
8. Install hub in drum bore with thrust surface upward.
9. Install lined plates and steel plates alternately, starting with a lined plate.
10. Coat fiber thrust washer with heavy grease to hold it in place and position it on clutch hub.
11. Align serrations of clutch cover and turbine shaft with serrations in drum and install cover and snap ring.

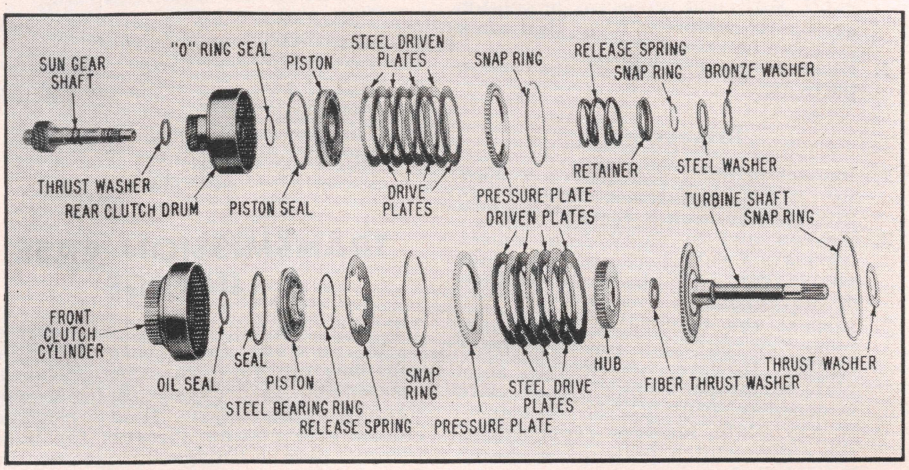

Fig. 25 Front and rear clutches and related parts for single range units

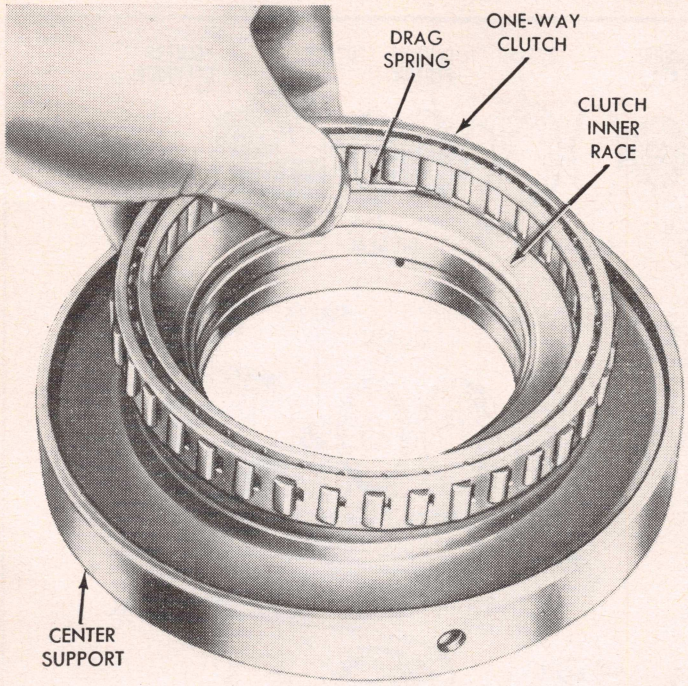

Fig. 26 Sprag clutch-to-center support installation

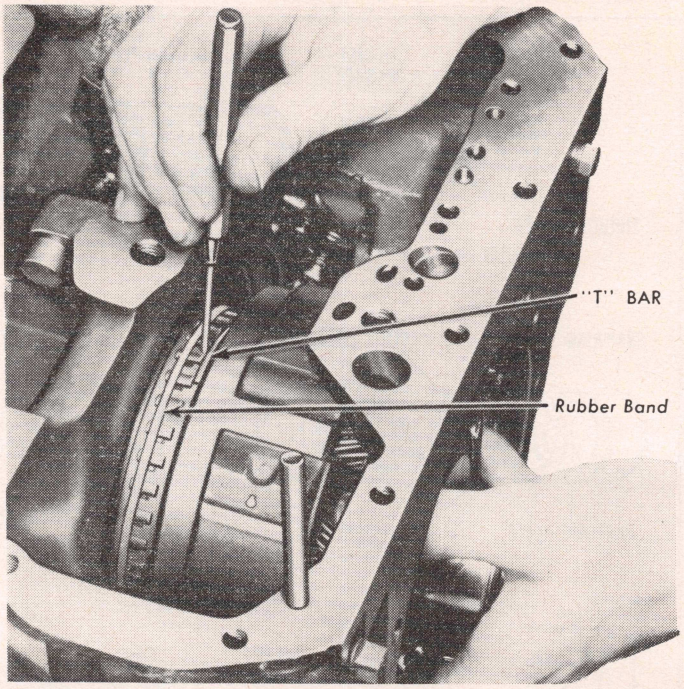

Fig. 27 Pinion carrier installation on units with sprag clutch

REAR CLUTCH & PRIMARY SUN GEAR

Service Note

The number and type of clutch plates vary with the vehicle make, model and engine. Be sure to obtain the correct clutch pack for the application being serviced.

Disassemble, Fig. 25, 25A

1. Remove two ring seals from primary sun gear shaft and remove rear clutch assembly.
2. Remove primary sun gear thrust washer and ring seals from sun gear shaft.
3. With a suitable spring compressor, exert sufficient pressure on clutch spring to compress it so that snap ring can be removed.
4. Remove the balance of the clutch parts.

Inspection

1. Inspect primary sun gear and shaft for burrs, scratches, worn ring grooves and broken teeth.
2. Use an awl to check front clutch lubrication ball check valve in front end of sun gear shaft for freedom of movement.
3. Inspect the balance of the clutch parts as outlined for the front clutch. However, check each steel plate for proper coning. Each plate is coned to .010″ to .020″ clearance. If any plate requires replacement, the entire clutch plate pack should be installed.

Assemble

1. Lubricate all parts with transmission fluid before assembly.
2. Install new inner O-ring seal on drum hub and new clutch outer seal on piston.
3. Install piston in drum bore.
4. Press piston down until it bottoms, being careful not to damage outer seal.
5. Install clutch spring and retainer.
6. Compress spring and install snap ring.
7. Install bronze plates and steel plates alternately, starting with a steel plate. Coned steel plates must face same direction; either all concave or all convex side up.
8. Install pressure plate with smooth side down and install snap ring.
9. Install two ring seals on short end of primary sun gear shaft.
10. Install sun gear thrust washer.
11. Install two ring seals on sun gear shaft adjacent to sun gear.
12. Position clutch on sun gear shaft.
13. Install two remaining ring seals on primary sun gear shaft.

TRANSMISSION CASE & LINKAGE

Remove linkage parts as required. Clean the transmission case thoroughly and blow out fluid passages with compressed air. Inspect the case for stripped threads, obstructed fluid passages, cracks, and mating surfaces for burrs. Inspect case bushings for scores, and linkage parts for wear or distortion.

TRANSMISSION, ASSEMBLE

When installing the sub-assemblies in the transmission case, no not use force to assemble mating parts. If the parts do not mesh freely, examine them for the cause of the difficulty. Always use new gaskets. Use only Automatic Transmission Fluid to lubricate parts.

Clutch Assemblies

1. Install front band in transmission case so that anchor end is aligned with anchor in case. Lift clutch assemblies out of holding block. *Do not allow clutches to separate.*
2. Install sub-assemblies in case from the rear while positioning servo band on drum. Hold units together while making installation.
3. Position center support in case, aligning hole in center support with hole in right-hand side of case.
4. Install right and left-hand center support outer bolts and external tooth lockwashers. *Lockwashers must be installed with rolled edge toward transmission case to insure a tight seal.*

Center Support, Sprag Clutch and Pinion Carrier

1. On the bench, install sprag clutch on center support with flange side of case rings up, Fig. 26.
2. Carefully compress each drag spring as it is started on the inner race. After all drag springs are started

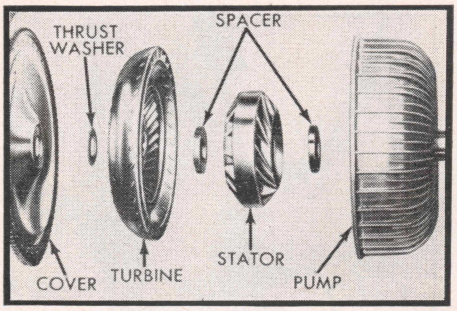

Fig. 28 Layout of torque converter parts

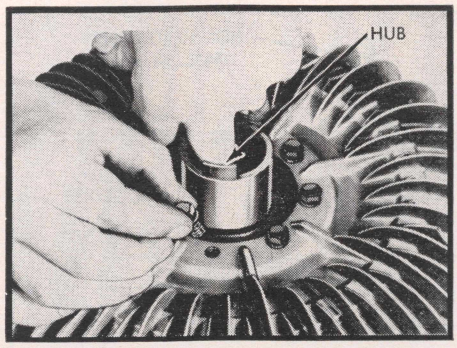

Fig. 29 Removing converter pump hub

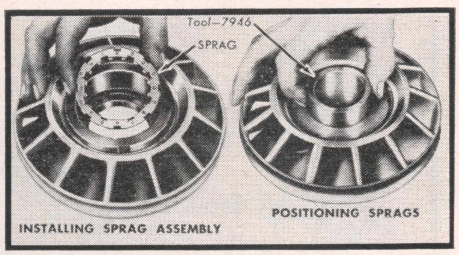

Fig. 31 Correct position of sprag in race

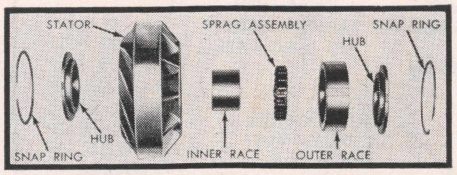

Fig. 30 Layout of stator parts

on race, rotate clutch to tilt sprags; then push clutch all the way down on center support. Place a strong rubber band around sprag outer ends, Fig. 27.

3. Install center support and clutch in case.
4. Position rear band in case. Install washer on thrust face inside pinion carrier.
5. Install pinion carrier in case and start pinion carrier front pilot in center support bushing. Depress the "T" bar and work pinion carrier forward until sprags are started on clutch outer race, Fig. 27.
6. Remove rubber band.
7. Work pinion carrier forward to the point that the sprag clutch is visible. Rotate pinion carrier counterclockwise (from rear) and note whether clutch rotates with pinion carrier or remains stationary with center support.
8. The clutch is so designed that the "T" bar frictional grip on the clutch outer race is stronger than the drag spring frictional grip on the inner race; hence the clutch should rotate with the pinion carrier. If it does not, replace the sprag clutch.

Pinion Carrier (Units Without Sprag Clutch)

1. Position rear servo band in case with strut ends up. Place anchor end with depression toward adjusting screw. Install a bronze thrust washer on thrust face inside pinion carrier.
2. To install pinion carrier, position rear band over drum while meshing planet pinions. Install the two seal rings on primary sun gear shaft and check rings for free movement in grooves.

Mainshaft End Play

If the end play was not within specifications when checked prior to disassembly, replace the washer with one of the proper thickness. The following selective washers are available in the following thicknesses:

.061″ to .063″
.067″ to .069″
.074″ to .076″
.081″ to .083″

After installing the proper washer, install the output shaft, carefully meshing the internal gear with the pinions.

Rear Pump

1. Put drive key in keyway on output shaft.
2. Place new front and rear gaskets on pump body.
3. Install thrust washer on pump body with bronze side up. Align thrust washer tangs with bosses on pump body and install rear pump.

Governor

Place governor drive ball in pocket in output shaft. Install governor, aligning groove with ball in output shaft. Install governor snap ring.

Install governor with governor body plate toward front of transmission.

Oil Distributor

1. Place four seal rings on oil distributor sleeve and check ring gaps to see that they are spaced equally around the sleeve. Check fit of seal rings in grooves in output shaft; rings should rotate freely. Install rings in grooves in output shaft.
2. Install three tubes in distributor sleeve. Install distributor sleeve on output shaft with chamfer forward. Slide sleeve forward over four rings and at the same time start tubes into case. The distributor sleeve is located between governor snap ring and speedometer drive gear.
3. Install new seal on rear pump outlet tube and install tube in transmission case and rear pump body.

Extension Housing

1. Position speedometer drive gear ball in pocket in output shaft. Install speedometer drive gear and retain gear in place with snap ring.
2. Insert extension housing oil seal replacer and pilot in housing; then install extension housing on transmission case. Install attaching bolts and external tooth lockwashers with rolled edge of washers toward transmission case to insure a tight seal.
3. Install governor inspection cover and a new gasket on housing.

Front Pump

Position new gasket in counterbore in front of transmission case. Install front pump, aligning pump bolt holes with holes in case. Install three of front pump attaching bolts.

Recheck transmission end play, which should be .010″ to .029″. Then install remaining pump bolt.

Final Assembly

Install progressively the front servo, rear servo, pressure regulator body, and control valve body as previously outlined. Then adjust front and rear bands. Finally, install oil screen and oil pan, using new gasket.

TORQUE CONVERTER

To remove the converter from the transmission, grasp the converter cover with both hands and pull straight out. To prevent damage to the front seal, do not rock the assembly from side to side. After removing the attaching bolts, the converter housing may be taken off the transmission.

Disassembly

Place the converter in a holding fixture. Note the location of the pump and cover aligning marks, then remove the cover attaching bolt, Fig. 28.

Remove the cover and gasket. Slip the bronze thrust washer from the pump housing. Lift out the stator, noting its position in the housing. Take the thrust washer from the pump hub.

To disassemble the stator, remove the one way clutch inner race. Release the snap ring which retains the outer hub to the stator. Remove outer hub, sprag assembly and outer race. Remove the snap ring retaining the inner hub to the stator and take out the inner hub.

To disassemble the pump, remove the bolts which attach the pump hub to the pump, Fig. 29. Take out the hub and remove the seal from the groove in the hub.

Inspection

Inspect the turbine and pump blades for looseness. Inspect all thrust surfaces for scores. Check the turbine splines for burrs and wear. Inspect the seal surface and front pump driving lugs for wear. Inspect the hub to pump mating surfaces

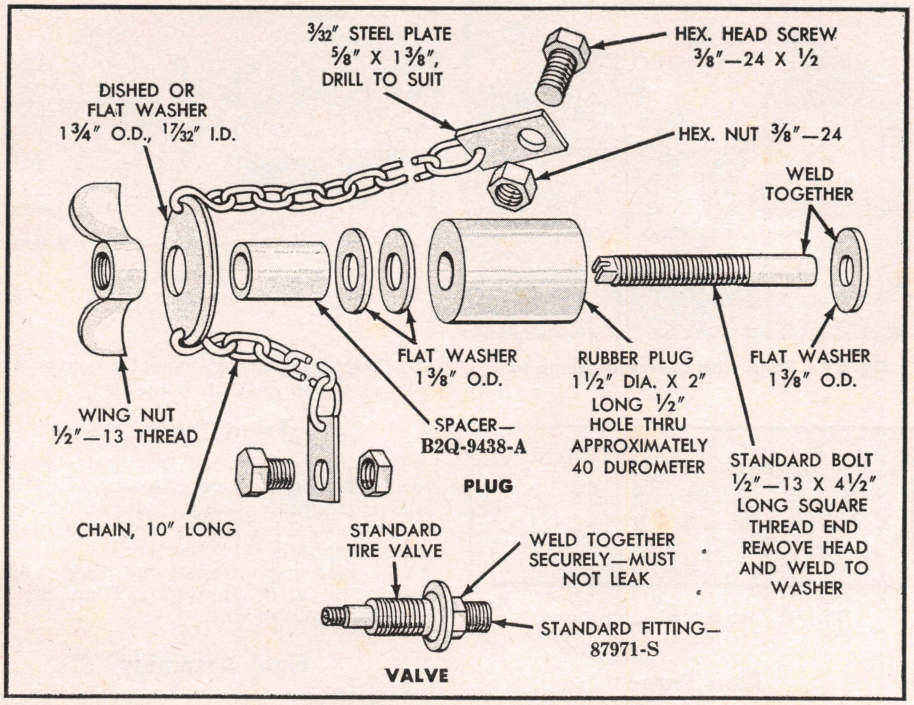

Fig. 32 Converter leak checking tool

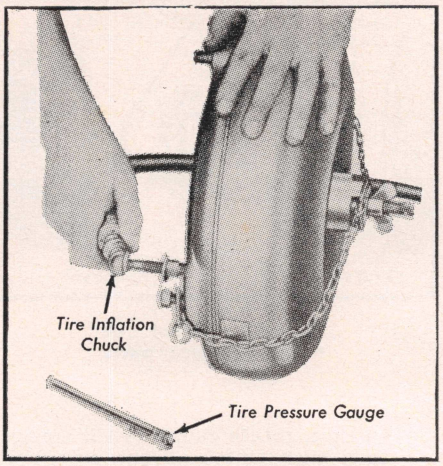

Fig. 33 Converter leak checking tool installed with tire inflating chuck in drain hole

for scores. Inspect the stator thrust surfaces for scores and the stator splines for wear. Check the sprag assembly for worn or broken sprags and a broken or distorted spring. Inspect the stator inner and outer races for scores, Fig. 30.

Reassembly

Install the stator inner hub and snap ring. Turn the assembly over and install the outer race in the stator. Then install the sprag into the outer race, Fig. 31. Make sure the sprags are pointed in the correct direction.

Install the outer hub and snap ring. Insert the inner race replacer (tapered side first) into the sprag assembly while rotating the tool counterclockwise to position the sprags as shown in Fig. 31.

Install the inner race with the spline section up. Guide the tool with the hand while pushing the inner race into position. Check the stator for clockwise rotation while holding the inner race.

To assemble the pump, install a new seal on the pump hub and place the hub in the pump. Install the thrust washer into the hub of the converter pump.

To assemble the converter, install the stator with "Front" up. Install the thrust washer in the hub of the turbine. Retain the washer in place with transmission fluid. Install the turbine. Place the bronze thrust washer on the turbine hub. Install the converter cover, using a new gasket. Note position of cover and pump aligning marks. Install the cover to pump body attaching bolts and tighten them to 25-28 lbs. ft. torque.

Install On Transmission

Attach the converter housing to the transmission, tightening the bolts to 40-50 lbs. ft. torque. Install the converter into the housing, being sure not to rock the assembly as it is being installed otherwise the seal may be damaged.

Service Note

The torque converter on most 1958-60 and all 1961-63 vehicles is a sealed unit and cannot be serviced. There is, however, a procedure that makes it possible to determine prior to installation whether or not the unit is serviceable. The points that determine the serviceability of the converter and which may be checked without the use of special equipment are: Stator-to-impeller interference check; stator-to-turbine interference check; converter leak check. Also, the converter may be cleaned if it is suspected that it contains foreign material.

Converter Cleaning (Converter Out)

1. Place torque converter in upright position and pour two quarts of new clean solvent or kerosene into converter through pump drive hub.
2. Turn and shake torque converter so as to swirl the solvent through the internal parts. Turning the turbine and stator with the transmission input and reaction shafts will aid in dislodging foreign material.
3. Position converter in its normal operating position with one of the drain plugs at its lowest point. Remove the plug and drain the solvent. Rotate the turbine and stator and shake converter while draining to prevent dirt particles from settling. Repeat flushing operation at least once or as many times as required until solvent drained is clear.
4. Flush any remaining solvent in the converter with two quarts of new transmission fluid. Reinstall drain plugs and tighten to proper torque.

Stator-to-Impeller Interference Check

1. Position front pump on a bench with spline end of the stator shaft pointing up.
2. Mount converter on pump so that splines on one-way clutch inner race engage mating splines of stator support, and converter hub engages pump drive gear.
3. While holding pump stationary, try to rotate converter counterclockwise. The converter should rotate freely without any signs of interference or scraping within the assembly.
4. If there is an indication of scraping, the trailing edges of stator blades may be interfering with leading edges of impeller blades. In such cases replace converter.

Stator-to-Turbine Interference Check

1. Position converter front side down on bench.
2. Install proper front pump assembly to engage mating splines of stator support and stator and pump drive gear lugs.
3. Install input shaft, engaging splines with turbine hub.
4. While holding pump stationary, attempt to rotate turbine with input shaft. The turbine should rotate freely in both directions without any sign of interference or scraping noise.
5. If interference exists, stator front thrust washer may be worn, allowing stator to hit turbine. In such cases converter must be replaced.

Converter Leak Check

If there is an indication that the welds on the torque converter housing are leaking, the following check should be made before replacing the unit. A leak checking tool shown in Fig. 33 can be made out of standard parts and with minor adaptations will fit all cars.

1. Install tool in converter and expand it by tightening the wing nut. Attach the safety chains, Fig. 34.
2. Install air valve in drain plug threads.
3. Introduce air pressure into converter housing. Check pressure with tire gauge and adjust it to 20 psi. *Caution: Do not introduce pressure that is much greaer than 20 psi.*
4. Place converter in tank of water. Look for bubbles of escaping air. If no bubbles appear, it may be assumed that the welds are not leaking.

HYDRA-MATIC

CONTENTS

PAGE NO.

Description 313
Trouble Shooting 315

Maintenance

Adding Fluid 313
Changing Fluid 313
Linkage Adjustments ..... *

*See Truck Chapters

"In Truck" Repairs

PAGE NO.

Air Pressure Tests 314
Band Adjustment (External) 315
Band Adjustment (Internal) 316
Pressure Regulator 317
Throttle Lever, Adjust 317
Control Valve 318
Parking Brake Bracket 319
Governor 319
Rear Oil Pump 320
Front Servo 320
Rear Servo 320
Reverse Unit 321

Repairs Requiring Transmission Removal

PAGE NO.

Transmission, Replace ..... *
Transmission, Disassemble 322
Front Pump 323
Oil Delivery Sleeve 324
Band Inspection 325
Front Planetary Unit 325
Rear Planetary Unit 326
Transmission Case 326
Transmission, Assemble 326

*See Truck Chapters

DESCRIPTION

In this transmission, two planetary units are used to give four forward speeds, Fig. 1. In each unit a hydraulically-operated clutch is used to lock two planetary members together for direct drive. Reduction (power multiplication) is obtained in both units by means of a band which can be used to hold one of the planetary units stationary. The bands are operated by means of hydraulically-controlled servos.

Oil for hydraulic operation is supplied by two oil pumps. The front pump is driven by the engine and the rear pump by the output shaft of the transmission.

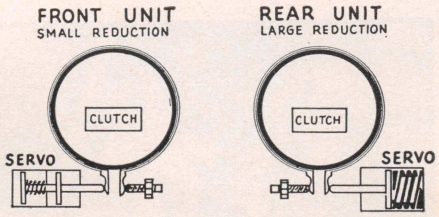

NEUTRAL -- Both bands and clutches released.
1ST. SPEED -- Front & rear units -- in reduction.
2ND. SPEED -- Front unit in direct drive -- rear in reduction.
3RD. SPEED -- Front unit in reduction --- rear in direct drive
4TH. SPEED -- Front and rear units --- in direct drive.

Fig. 1 Band and clutch positions in different gears

Although both planetary units are similar, the rear unit differs in two ways from the front unit: It is longer, has more clutch plates and greater gear reduction; the rear servo is normally applied by spring pressure and released by oil pressure.

Clutch and Band Application

Fig. 2 shows the band and clutch application for all speeds. Bear in mind that in either planetary unit of the transmission (a) when the band is applied the clutch is disengaged and the unit is in reduction, (b) when the clutch is applied the band is disengaged and the unit is acting as a coupling for direct drive.

MAINTENANCE

Adding Fluid

1. Set hand brake and place selector lever in neutral.
2. Start engine and allow it to idle continuously for a minimum of two minutes to warm up the oil.
3. Remove and wipe dipstick and reinsert.
4. Add fluid as required to bring the level *exactly* to the FULL mark. Do not overfill the transmission as this will cause foaming which may result in improper operation. If the level is above the FULL mark, the excess should be drained.

Changing Fluid

Some models do not have a drain plug in the transmission oil pan; others do. In draining fluid from transmissions having an oil pan drain plug remove the flywheel inspection plate, the ⅛" pipe plug from the torus cover and the drain plug from the back of the oil pan.

On transmissions not having an oil pan drain plug, proceed as follows:

1. Remove flywheel inspection plate.
2. Remove $\frac{7}{16}$" hex head pipe plug from the torus cover and drain the fluid from the torus cover.
3. Center a drain pan directly below and as close as possible to the point where the external filler tube attaches to the transmission oil pan.
4. Hold the external fluid tube with a rag if the transmission oil is hot and carefully loosen nut attaching tube to oil pan.
5. As soon as nut is completely loosened, quickly rotate filler tube away from transmission so it will not interfere with fluid flow.
6. After draining install and tighten drain plugs.
7. Replace flywheel housing bottom cover.
8. Pour 9½ quarts of Automatic Transmission Fluid into transmission.
9. With selector lever in neutral, run

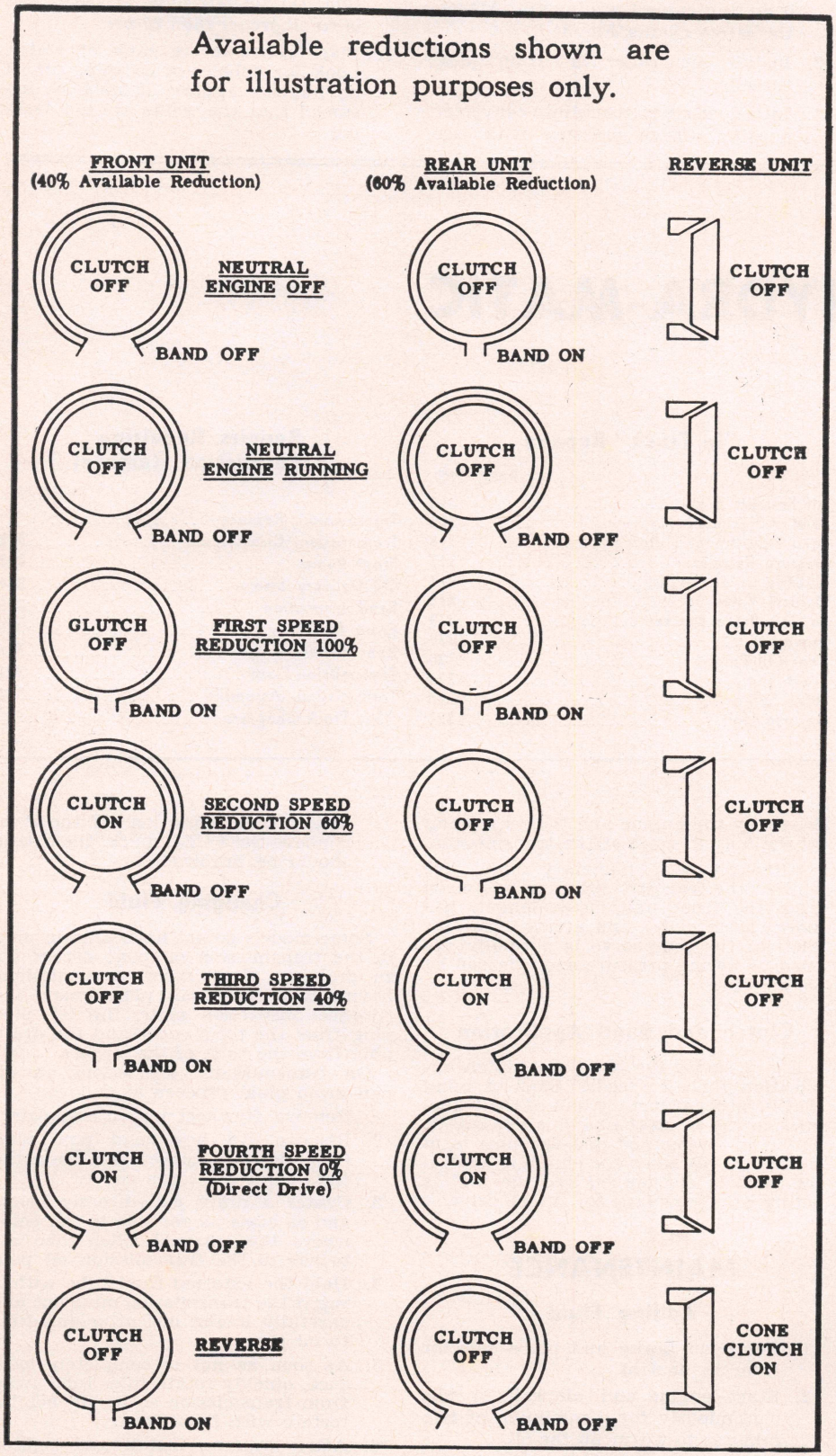

Fig. 2 Band and clutch application

engine at a fast idle for about 1½ minutes to fill the coupling.

10. Reduce engine speed to slow idle and check level. Then add fluid as required to bring level *exactly* to the FULL mark.

Caution

It is recommended that the oil pan and screen be removed and cleaned whenever the oil is changed. This is particularly important where the oil is drained by means of the filler tube since the opening is well above the bottom of the pan, thus allowing considerable quantity of old oil and contaminants to remain in the pan.

"In Truck" Repairs

AIR PRESSURE TESTS

Air pressure tests afford an excellent means of tracking down Hydra-Matic troubles. The only equipment needed is air delivered at about 80 lb. of pressure, and a special blow gun attachment which prevents air from escaping around the nozzle when it is applied to the transmission oil passages, Fig. 3.

Oil passages to be checked are identified in Fig. 4, and the passages should be checked in the sequence which follows. To gain access to the passages, drain the transmission, remove bottom pan, oil screen, side cover and control valve assembly.

Front Clutch Apply

Air pressure applied intermittently should move clutch piston audibly and actuate the front clutch. Fog of oil accompanied by rush of air from inside front unit drum indicates faulty front clutch seal. Leakage from other passages in side of case mean "short circuit" due to faulty transmission case or oil delivery tube.

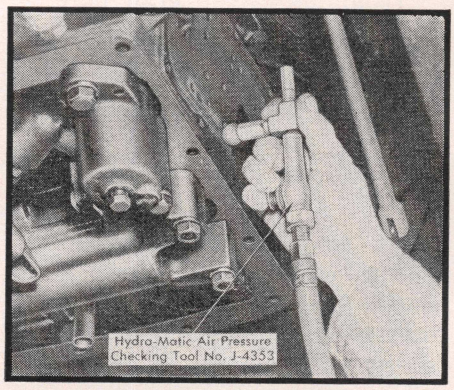

Fig. 3 Checking passage in transmission with blow gun

Front Band Apply

Air pressure should actuate front servo and apply band without appreciable escape of air around flat surface of servo body. Small amount of blow-by is permissible from front band release passage.

Front Band Release

Air pressure will not actuate servo. Check for unusual escape of air between servo body and transmission case, and around band release cylinder.

Governor to 4-3 Valve

Slight click will be heard when overrun control valve is actuated. No leakage is permissible except for slight amount from front servo body and front band apply passage.

Rear Band Release

Air pressure should release rear servo and band. Small amount of air will escape past servo piston ring. Slight leakage is also permissible from compensator passage.

Rear Clutch Apply

Air pressure applied intermittently should move clutch piston audibly and actuate rear clutch. Other conditions described under Front Clutch Apply also apply here except check is made at rear unit drum.

Compensator to Servos

Air pressure should actuate rear servo to tighten rear band, and front servo to apply front band. Except for normal escape past piston ring gaps, no air leakage is permissible.

Main Line Pump Feed

Large amounts of air and oil will blow out from front side of front drum assembly. Any other leakage of air and oil indicates interconnected passages due to faulty transmission case.

Line Pressure

No leakage is permissible at any point when plug is sealed in place between band adjusting screws.

Valve Body Exhaust

Complete blow-by to interior of transmission case should result. Partial obstruction of passage can cause erratic shifting.

Reverse Clutch Apply

Intermittent application of air pressure should audibly actuate the reverse cone clutch piston. Unusual escape of air around the piston indicates leakage of oil seals in the reverse cone assembly.

EXTERNAL BAND ADJUSTMENT

If the special adjusting tool shown in Fig. 6 and a tachometer are not available, adjust bands by the internal method de-

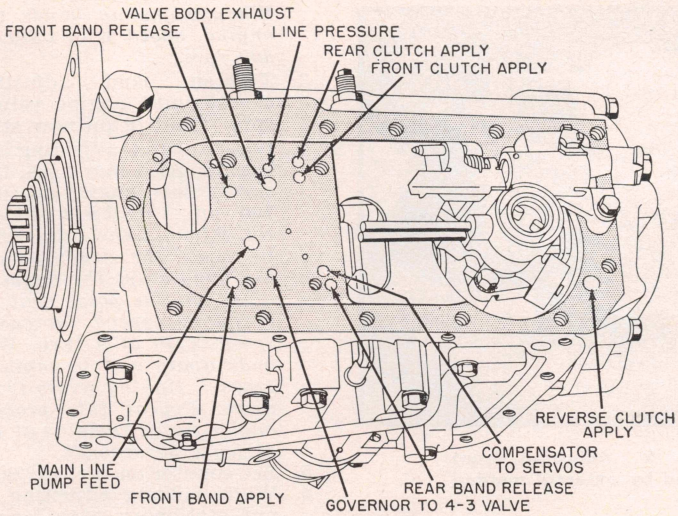

Fig. 4 Identification of oil passages (typical)

IMPORTANT—BEFORE TESTING, ALWAYS——1. CHECK OIL LEVEL——2. CHECK ENGINE IDLE

Date_____ Trans. No._____

Owner_____ R. O. No._____

Mileage_____ Tester_____

SHIFT CONDITIONS

SHIFT CONDITIONS	√	Possible Causes	OTHER CONDITIONS	√	Possible Causes
Too High		C-G-H	Excessive Creeping		B-O-P
Too Low		C-G-H	Slipping		A-C-D-E-F-G-I J-M-O-P-R-U-V
Varies		C-F-G-H	Jumps out of Reverse		C-N
Hunting		C-G	No Drive Forward		A-C-D-F-E-I-M-K
Misses one or more shifts		G-H-O	Locks up on reverse coast		D-F-G-J-K
Improper Throttle downshift		C-D-G-H-K	Moves forward when in reverse		P
Engine speeds up, Band apply rough		C-F	Noisy		See Noise Section
Rough downshift to 1st		G-J	Ratching Noise when shifted to reverse		B-C-D-G-J-N
Violent Shifting		C-G	No drive in reverse		E-N
Shifts above 2nd in low range		G-H	Drives in reverse only		C-N-T
No shifts—Stays in same gear		C-G-H			

ALWAYS CHECK CAUSES IN SEQUENCE GIVEN

POSSIBLE CAUSES

A	Oil Level	I	Front Servo	R	Oil Delivery Sloove
B	Engine Idle Speed	J	Rear Servo	S	
C	Linkage	K	Front Oil Pump	T	Manual Detent Lever
D	Oil Pressure	L	Rear Oil Pump	U	Restriction in Oil Circuit
E	Servo Bands	M	Fluid Coupling	V	Excessive Oil Leak in Circuit
F	Pressure Regulator	N	Reverse Unit	W	
G	Control Valve Assembly	O	Front Unit	X	
H	Governor	P	Rear Unit	Y	

OIL LEAKS

WHERE NOTICED	POSSIBLE CAUSE	√
Between Flywheel & Crankshaft Flange	Loose Flywheel to Crankshaft Bolts or Gasket	
Fluid Coupling & Flywheel or Fluid Coupling Proper	Flywheel to Torus Cover Gasket—Flywheel Sealing Area, Drain plug or Dampener Rivets	
Front of Transmission	Front Cover, Gasket, Front Oil Seal or Oil Seal Rings	
Bottom Oil Pan	Oil Pan Gasket—Drain Plug Gasket	
Side Cover Pan—or left rear corner of transmission	Side Cover Pan Gasket—Throttle and Manual Shaft seals, Pressure line plug	
Rear of Transmission	Rear Oil Seal—Rear Bearing Retainer Gasket	

NOISE

OCCURS UNDER FOLLOWING CONDITIONS	POSSIBLE CAUSE	√
Neutral, 1st and 2nd Gears only	Rear Unit Planetary Gears	
Neutral, 1st, 3rd and Reverse Gears only	Front Unit Planetary Gears	
Reverse Gear, Acceleration only	Reverse Unit Planetary Gears	
Reverse Gear, Deceleration only	Rear Unit Planetary Gears	
Metallic scraping at front of transmission	Excessive Backlash—Torus Members	

Fig. 5 Trouble shooting chart

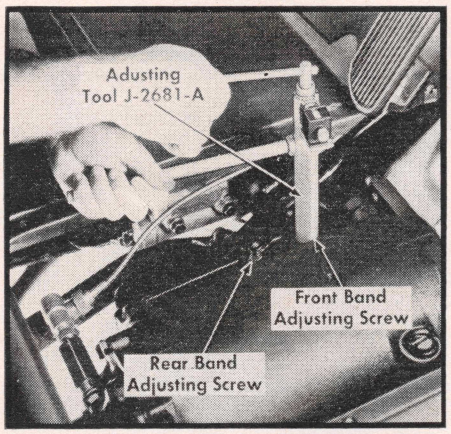

Fig. 6 Adjusting front band by external method

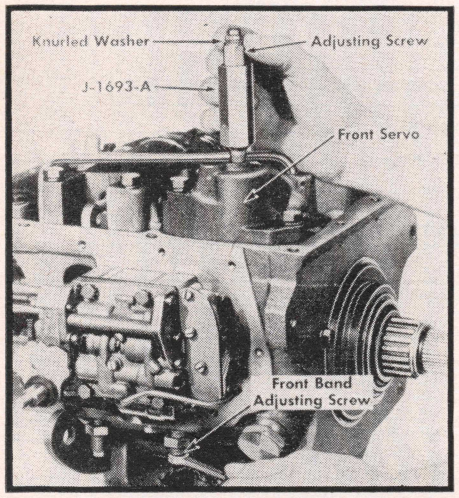

Fig. 7 Adjusting front band by internal method

scribed further on.

1. Set hand brake firmly and block wheels to prevent vehicle from moving forward during adjustment.
2. Start engine and allow it to run until temperature is normal (choke and fast idle off) before proceeding.
3. Connect tachometer to engine.
4. Place control lever in either 1-4 or 1-3 position.
5. Adjust carburetor idle screw to give 700 rpm.

Front Band

1. Remove floor pan and position band adjustment tool on front band adjusting screw, Fig. 6.
2. Loosen band adjusting screw lock nut. Then with special tool, Fig. 6, loosen band adjusting screw until engine speed increases to 900-1000 rpm (front drum spinning freely). *If engine speed does not increase to 900-1000 rpm, the bottom pan should be removed and the bands and drums inspected. If inspection shows bands and drums to be in good condition, adjust bands by the Internal Method. When adjusting bands with a new engine, speed may only increase to 800 rpm.*
3. Tighten band adjusting screw slowly until engine returns to 700 rpm (front drum now stopped).
4. Loosen band adjusting screw until engine speed increases, then tighten slowly until engine speed returns to 700 rpm. *The object of loosening and retightening the adjusting screw is to locate the exact point at which the band stops the drum from spinning. At this point wait 30 seconds. If engine speed increases, tighten screw 1/10 of a turn. Wait 30 seconds again and if engine speed increases, tighten screw 1/10 of a turn more. Repeat this procedure until engine speed remains at 700 rpm for at least 30 seconds.*
5. Set counter on tool to "00".
6. While holding adjusting screw lock nut stationary with long handle of tool, tighten adjusting screw exactly 6½ turns with short handle of tool (counter will read "6.5").
7. Hold adjusting screw stationary with short handle of tool while tightening lock nut with long handle.
8. Remove tool and tighten lock nut to 40-50 lb. ft. torque.

Rear Band

1. To adjust rear band, the tool shown in Fig. 6 is placed on the rear band adjusting screw. Repeat Steps 2 through 5 as performed under Front Band.
2. After counter on tool has been set to "00", position control lever in Neutral.
3. While holding lock nut stationary, tighten rear band adjusting screw exactly two turns (counter on tool will read "2.0").
4. Holding adjusting screw stationary, tighten lock nut.
5. Remove tool and tighten lock nut 40-50 lb. ft. torque.

INTERNAL BAND ADJUSTMENT

Before adjusting the bands, make sure the anchor of each band is seated on the adjusting screw and that the band is centered on the drum. Turn the output shaft and mainshaft by hand until band moves into operating position on drum.

Front Band

1. Remove pipe plug from top of front servo. Loosen hex adjusting screw of front servo gauge, Fig. 7, until approximately ⅛" of threads are exposed above gauge body. Install gauge in bore of servo body from which pipe plug was removed and *tighten gauge by hand only.*
2. Tighten hex adjusting screw of gauge with fingers until stem of gauge is felt to *just touch* piston in front servo. Do not over-tighten.
3. Using a wrench, tighten hex adjusting screw of gauge five complete turns.
4. Tighten front band adjusting screw until knurled washer on top of adjusting gauge is *just free* to turn.
5. Hold front band adjusting screw and tighten lock nut securely to 40-50 lb. ft. torque.
6. Loosen adjusting screw of gauge at

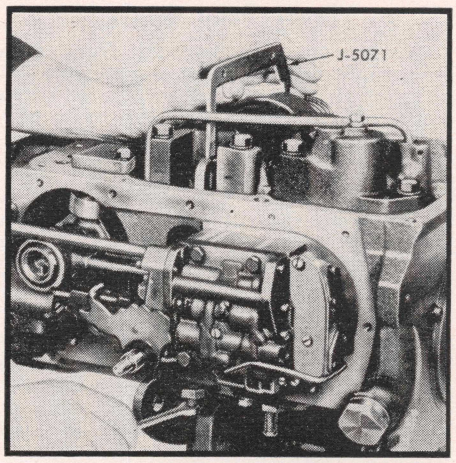

Fig. 8 Adjusting rear band by internal method

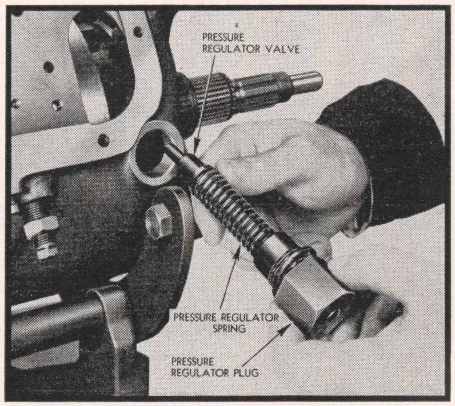

Fig. 9 Removing pressure regulator

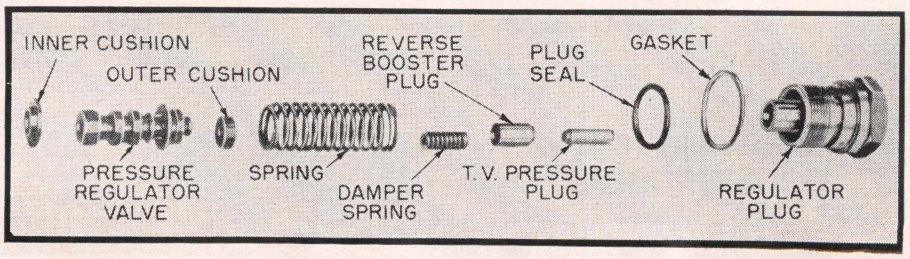

Fig. 10 Layout of pressure regulator parts (½ ton models)

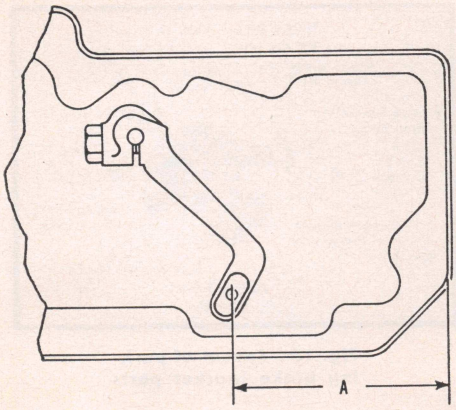

Fig. 8A Throttle lever position. Dimension "A" is measured in inches with lever back against its stop. Adjust by bending lever as required to obtain the dimension given below:

Chevrolet 1953-56	**3 9/16**
GMC	**3 9/16**

least five full turns and remove the gauge from the servo.

7. Install pipe plug in front servo body.

Rear Band

1. With band centered on drum, make sure rear servo actuating lever is not under tension. Position gauge shown in Fig. 8 on rear servo, with short leg hooked over end of accumulator body and long leg resting on servo piston stem.
2. Tighten rear band adjusting screw until rear servo actuating lever just contacts face of gauge. *If adjusting screw is turned beyond adjustment point, back screw out at least three full turns and repeat the adjustment.*
3. When correct adjustment is obtained, hold adjusting screw stationary and tighten lock nut to 40-50 lb. ft. torque.

THROTTLE LEVER, ADJUST

Whenever a transmission is overhauled or shifts are erratic, check the position of the throttle lever at the side of the transmission to see if it has become bent. This is a very important adjustment in that when the transmission throttle lever is all the way back against its stop the throttle valve in the carburetor must be fully closed. Gauges are available to measure the position of the throttle lever but if not available, use the data supplied in the caption under Fig. 8A.

After the lever has been bent to obtain the proper dimension, adjust the carburetor linkage as outlined in the truck chapters.

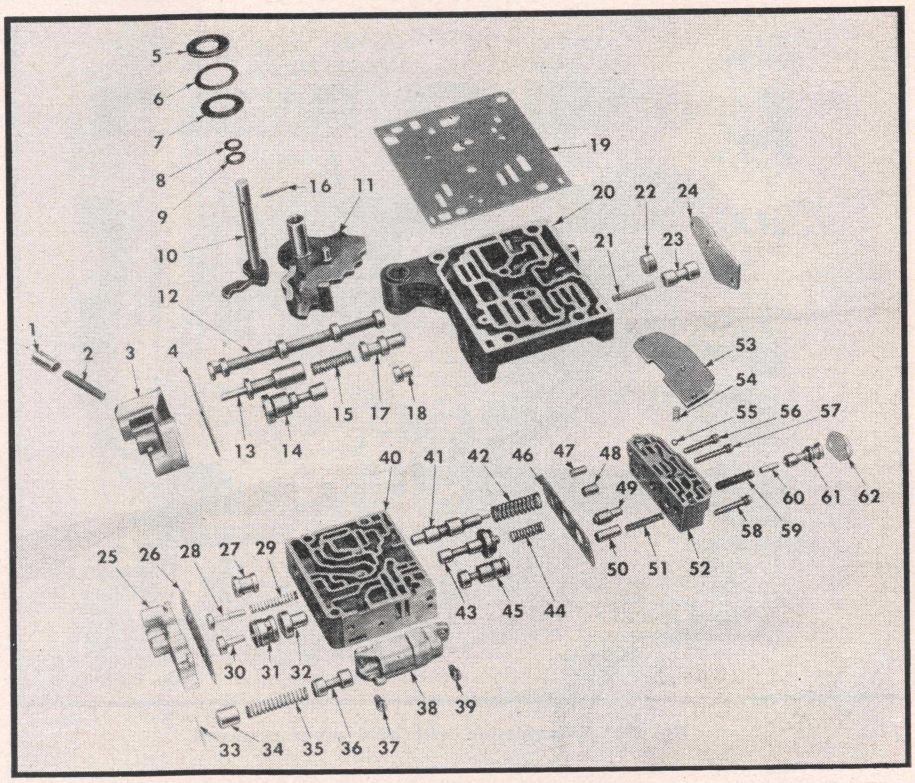

Fig. 11 Exploded view of typical control valve. Use for identification of parts only inasmuch as units vary from year to year

1. Detent Plunger
2. Detent Plunger Spring
3. Detent Plunger Retainer
4. Detent Plunger Retainer Spacer
5. Manual Shaft Seal
6. Manual Shaft Outer Washer
7. Manual Shaft Inner Washer
8. Throttle Valve Operating Shaft Washer
9. Operating Shaft Seal
10. Inside Throttle Valve Lever
11. Inside Detent Control Lever
12. Manual Control Valve
13. T-Valve
14. Double Transition Valve
15. Throttle Valve Spring
16. Throttle Valve Operating Shaft Pin
17. Throttle Valve
18. Compensator Auxiliary Plug
19. Valve Body Spacer Plate
20. Outer Valve Body
21. Compensator Valve Spring
22. Detent Plug
23. Compensator Valve
24. Outer Valve Body Front Plate
25. Inner Valve Body Rear Cover
26. Valve Body Rear Cover Spacer
27. 3-4 Governor Plug
28. 2-1 Detent Plug
29. 2-1 Detent Plug Spring (½ Ton only)
30. 2-3 Governor Plug
31. 2-3 Governor Plug Sleeve
32. 2-3 Auxiliary Valve
33. 3-2 Timing Valve Plug Retainer Pin
34. 3-2 Timing Valve Plug
35. 3-2 Timing Valve Spring
36. 3-2 Timing Valve
37. 3-2 Timing Valve Body Screw
38. 3-2 Timing Valve Body
39. 3-2 Timing Valve Body Screw
40. Inner Valve Body
41. 3-4 Shift Valve
42. 3-4 Shift Valve Spring
43. 1-2 Shift Valve
44. 1-2 Regulator Plug Spring
45. 2-3 Shift Valve
46. Front Valve Body Spacer
47. 3-4 Regulator Plug
48. 4-3 Shuttle Valve
49. 1-2 Regulator Plug
50. T-V Regulator Valve
51. T-V Regulator Valve Spring
52. Front Valve Body
53. Front Valve Body Plate
54. "T" Oil Ball Check Valve Spring
55. "T" Oil Ball Check Valve
56. Front Body to Inner Body Screw
57. Front Body to Inner Body Screw
58. Front Body to Inner Body Screw
59. 2-3 Shifter Valve Spring
60. 2-3 Spring Guide Pin
61. 3-2 Detent Plug
62. Detent Plug Plate

PRESSURE REGULATOR

While removing the pressure regulator from the side of the transmission, Fig. 9, unscrew the plug while holding hand against spring tension to avoid losing parts.

In disassembling the regulator, Fig. 10, do not remove the valve inner and outer cushions unless inspection shows necessity for replacement.

Inspect springs for weakness, collapsed coils and distortion. Inspect plugs for nicks and scores. Blow out all passages in regulator plug. Inspect regulator valve for nicks and scores, and make sure valve is clean. Clean all parts and wipe dry. Then reassemble the regulator.

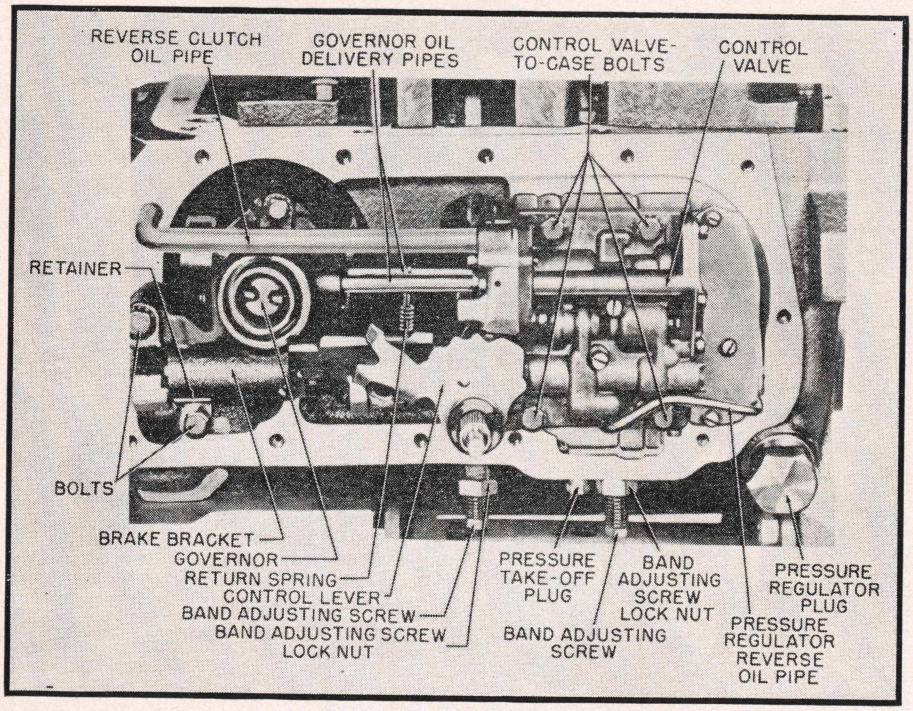

Fig. 12 Transmission with side cover removed

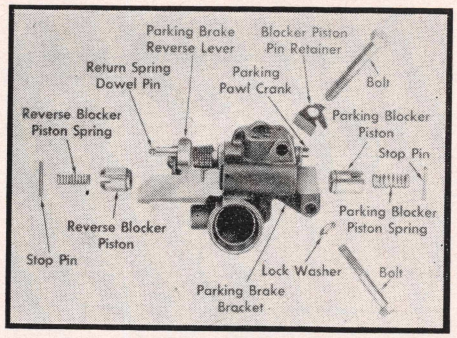

Fig. 13 Layout of parking brake bracket parts

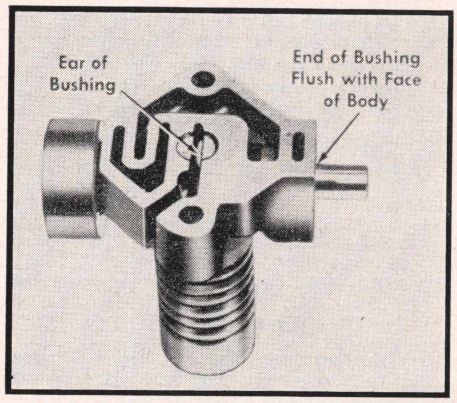

Fig. 15 Installation of G-2 plunger and bushing

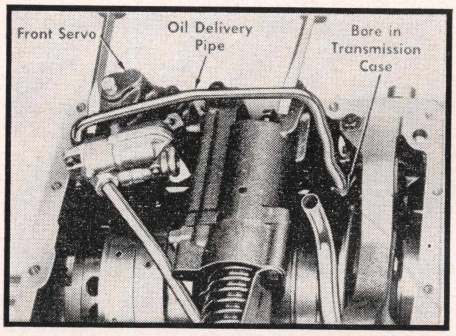

Fig. 16 Removing governor oil delivery pipe

CONTROL VALVE

To remove the control valve, take off the oil pan and side pan. Disconnect the speedometer cable. Unfasten and remove the control valve by working toward front of case.

Extreme care must be used when handling the control valve assembly. Do not grip valve bodies in vise. Never use force when removing or installing valves or plugs.

The control valve should be laid flat on clean paper for disassembling. Keep component parts covered except parts on which work is being performed. Keep screws with correct part as valve body is disassembled.

Before inspection of valve bodies and plugs, make sure they are thoroughly cleaned and wiped dry. Then, referring to Fig. 11 as a guide, inspect the parts as follows:

1. Examine all valves and plugs to see that they are free of burrs, scores or other damage. Burrs may be removed with fine crocus cloth and light oil. Valves and plugs have sharp corners to prevent dirt from wedging between valves and plugs and valve bodies. *When removing burrs, do not round off sharp edges.*
2. With valves, plugs and valve bodies clean and dry, check each shifter valve, governor plug and regulator plug for free movement in their respective bores and operating positions. *It can be assumed that valves and plugs are free in their operating positions if they will fall of their own weight in their respective bores when valve body is shaken slightly.*
3. Check fit of throttle valve inside lever for looseness on throttle valve operating shaft.
4. Check inside detent control lever for looseness on manual shaft.
5. Make sure inside detent control lever pick-up pin is tight in place and not excessively worn.
6. Check for worn or damaged splines on manual shaft and throttle valve operating shaft.
7. Check action of throttle valve operating shaft in manual control shaft, and manual control shaft in hub of outer body.
8. If inspection shows levers and shafts bind, or loose and excessively worn, proceed as follows:
9. Support outer valve body and control shaft assembly so that throttle valve operating shaft, manual shaft and outer valve body will not be damaged during operating shaft pin removal.
10. Using a small punch and hammer, drive out pin.
11. Remove inside throttle valve lever, detent control lever, shaft seal and washer from outer valve body.
12. Replace damaged parts and reas-

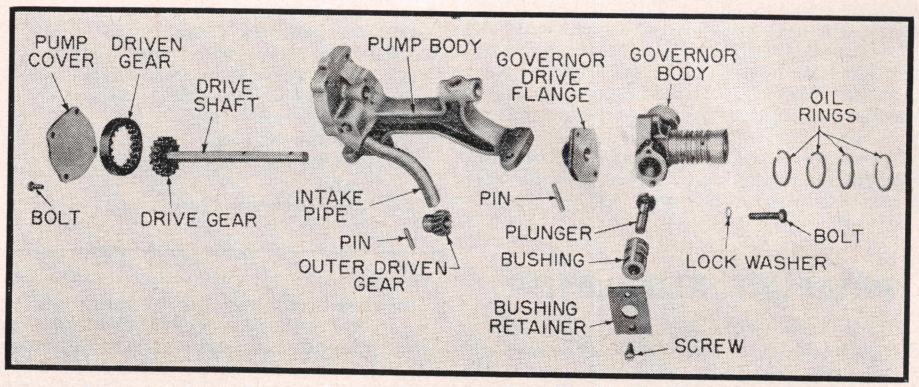

Fig. 14 Layout of rear pump and governor parts

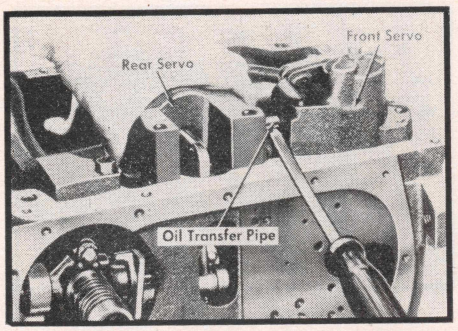

Fig. 17 Separating rear servo and oil transfer pipe

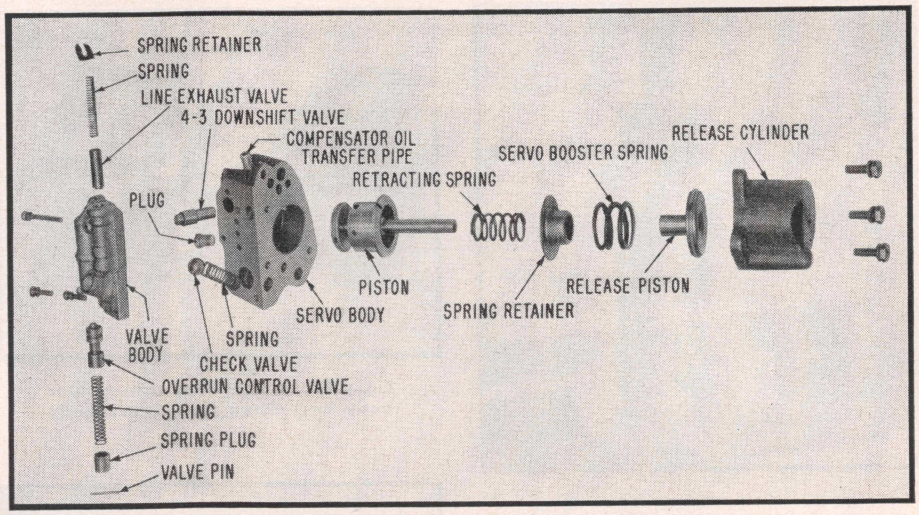

Fig. 18 Expoded view of front servo

semble to outer valve body.

13. While properly supporting outer valve body and control shaft, drive in new operating shaft pin. Check shafts for freedom of movement.
14. Check all springs for weakness and distortion.
15. Check all valve body, plate and cover contact surfaces for cracks or scores. Clean all passages. Check threads for crossed condition. Examine valve bodies for warpage by placing a straight edge across mating surfaces. If either valve body requires replacement, the complete control valve assembly must be replaced.
16. Inspect "T" oil ball check valve for damage or rough surface.

Reassembly

Lubricate each moving part with clean transmission fluid before part is installed. Refer to Fig. 11 for identification and location of parts. Assemble the parts in the outer valve body first, then the inner valve body.

When installing manual control valve in outer valve body make sure pick-up pin on inside detent control lever engages manual control valve correctly.

PARKING BRAKE BRACKET

After removing the control valve as outlined previously, remove the parking brake bracket by carefully sliding from the governor to avoid damage to oil rings, Fig. 12. If shims are present between case and parking brake bracket, the same shims must be reinstalled as long as the original transmission case is used.

Disassemble

1. While holding finger over parking blocker piston spring, use needle nose pliers to remove piston stop pin.
2. Remove blocker piston spring and use snap ring pliers to remove piston.
3. Clip off head of stop pin. Then while holding finger over reverse blocker piston spring, pull pin from brake bracket with needle nose pliers.
4. Remove reverse blocker piston spring and then pull piston out with snap ring pliers.

Inspection

1. Referring to Fig. 13, check springs for evidence of weakness, distortion and collapsed coils.
2. Check pistons and their bores for scores or burrs. Check freeness of pistons in their bores.
3. Make sure three ¼" plugs are securely staked in place in brake bracket.
4. Make sure all oil passages are clean.
5. Check four governor oil seal rings in bore of bracket; ring gap should be .001-.006".
6. Inspect bracket sleeve for scores or signs of extreme wear.
7. Inspect bracket for cracks or other damage.
8. See that crank operates freely in bracket without binding, yet shows no signs of unusual wear.
9. Check reverse shifter crank roller for wear. Check crank pin for cracks at point where pin joins crank.
10. Make sure lever return dowel pin is secure in brake lever.
11. Inspect pawl for wear or damage.
12. Clean all parts and wipe dry.

Assemble

1. Lubricate each moving part with transmission fluid before each part is installed.
2. Install reverse blocker piston (with slotted end exposed) and spring in bore of bracket. Compress spring with blunt screwdriver and install new stop pin. Peen ends of pin to hold in place.
3. Install parking blocker piston and spring in same manner and secure with stop pin.

GOVERNOR

After removing the control valve and parking brake bracket as outlined previously, use a file to mark the edge of the governor and drive flange so they may be reassembled in the same relative position. Then unfasten the governor from the flange and withdraw it from the case.

Refer to Fig. 14 when repairing the governor and inspect the parts as follows:

1. Inspect governor ring lands for wear; if lands are damaged or worn thin replace complete governor.
2. Inspect governor oil seal rings and for freedom in grooves of governor tower.
3. Inspect governor body for damage.
4. Inspect governor plungers for free movement. If G-1 plunger sticks, replace complete governor. If G-2 plunger sticks, replace this plunger and bushing.

When assembling the governor, insert the G-2 plunger with ear of bushing toward flat side of governor body. Body has slot on inside to accommodate ear of

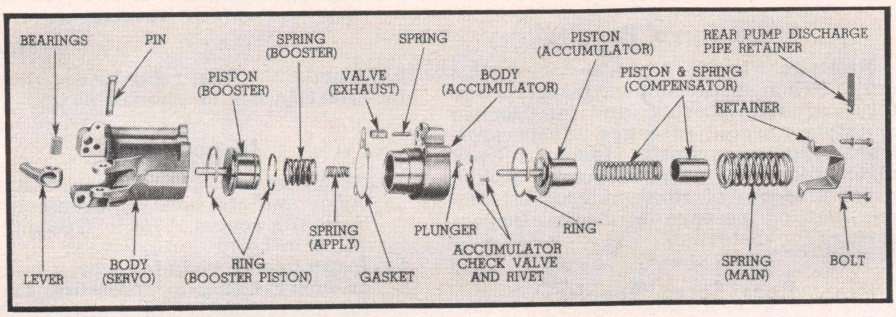

Fig. 19 Exploded view of rear servo

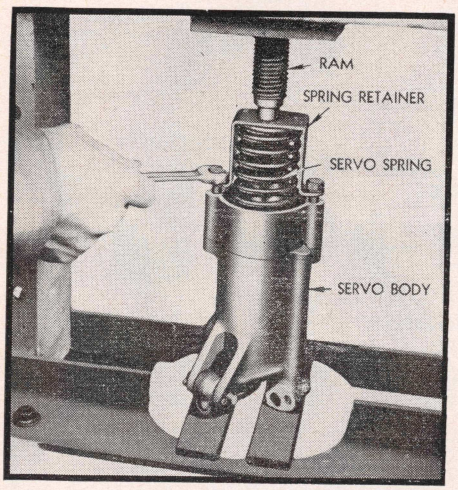

Fig. 20 Compressing rear servo spring so unit can be taken apart

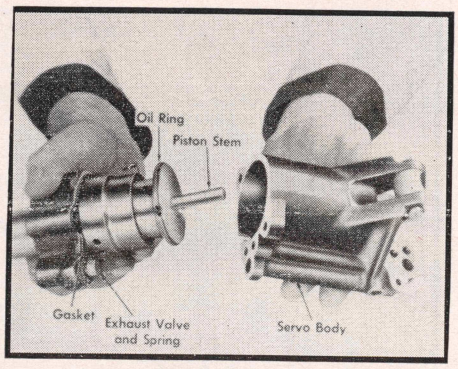

Fig. 21 Removing accumulator body and piston from servo body

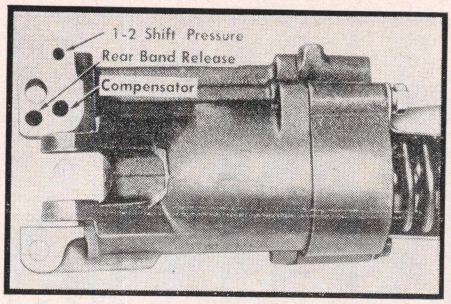

Fig. 23 Rear servo oil passages

bushing. When properly assembled, end of bushing will be flush with bushing retainer side of governor body, Fig. 15. When attaching governor to drive flange, be sure to match the marks made on disassembly. When installed, be sure the governor does not bind; check by turning the output shaft while checking the governor in various positions.

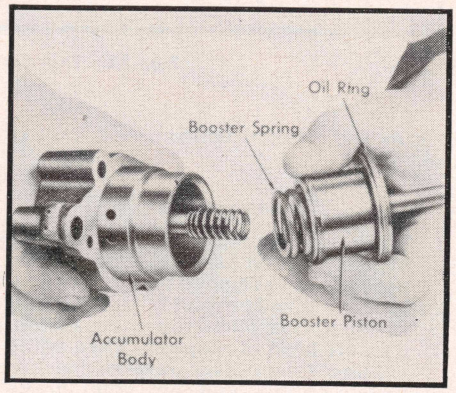

Fig. 22 Disassembly of booster piston and spring and accumulator body

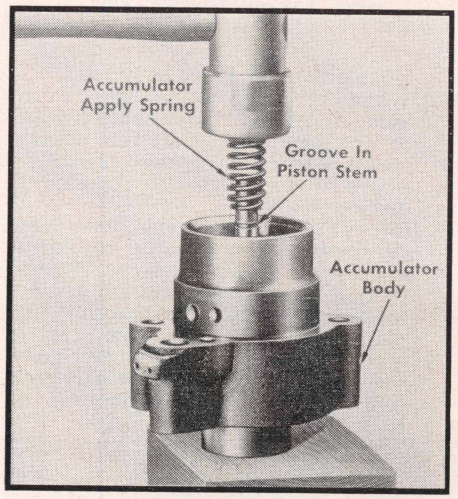

Fig. 24 Installing accumulator apply spring

REAR OIL PUMP & SERVOS

To remove the rear pump, take off the control valve and parking brake bracket and proceed as follows:

1. Back off band adjusting screws at least five turns.
2. Remove governor oil delivery pipe by prying gently with screwdriver, Fig. 16.
3. Remove rear pump and both servo attaching screws.
4. Separate front and rear servos at oil transfer pipe by moving rear servo toward rear of transmission, Fig. 17.
5. Remove rear servo.
6. Remove rear pump delivery pipe.
7. Remove front servo and front pump delivery pipe.
8. Position governor so large round counterweight is toward front of transmission.
9. Position one reverse drive flange attaching bolt so that no interference will be encountered when removing the rear pump and governor assembly from case. (If removing this assembly with transmission in car, position reverse bolt straight down; if transmission is out of car and inverted, attaching screw must be straight up.)

Rear Pump Repairs

Separate the pump cover from the body. Mark the outside of the pump driven gear with pencil or prussian blue so reassembly may be made in the original position.

Referring to Fig. 14, inspect pump gears for worn or damaged teeth. Inspect pump body for damage. Check mating surfaces of pump body for nicks or scores. Examine pump gear pocket for wear and scores. Check cover for scores or nicks, and check for warpage. Make sure rear oil pump intake pipe is not loose in pump body, and that the passageway in the pipe is not obstructed. Check for worn shaft and bushings by attempting to move shaft sideways in pump body.

Mount dial indicator on pump body to check drive flange runout. If runout, measured inside tapped holes, exceeds .002", the drive flange or complete pump must be replaced.

When assembling the pump, lubricate each part with automatic transmission fluid. Install pump driven gear in gear pocket with side previously marked facing up. Attach cover to pump body.

Front Servo Repairs

Refer to Fig. 18 when servicing this unit. When disassembled, inspect body for roughness, scoring, and for blocked or interconnected passages. Inspect release cylinder for scores. Inspect release piston and apply piston for scores, broken rings, freedom of rings in grooves, and see that oil passage is clear. Inspect springs for distortion.

Rear Servo Repairs

Disassemble this unit as shown in Figs. 20, 21 and 22. Then refer to Fig. 19 for identification and location of parts.

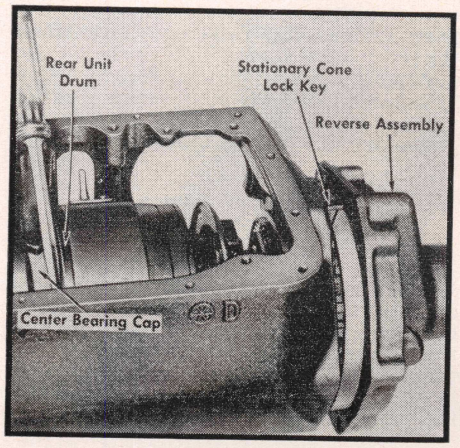

Fig. 25 Position of screwdriver for removal of reverse unit

Inspection

1. Referring to Fig. 19, inspect exhaust valve and its bore in accumulator body for scores. Check freedom of valve in bore.
2. Inspect servo body for scores, cracks or nicks. Using air pressure, check for interconnected or restricted passages, Fig. 23. Make sure two ¼"

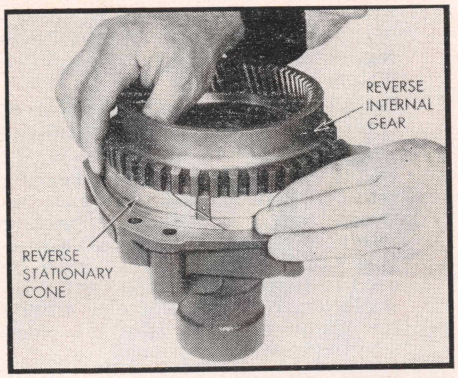

Fig. 26 Removing reverse clutch internal gear and stationary cone

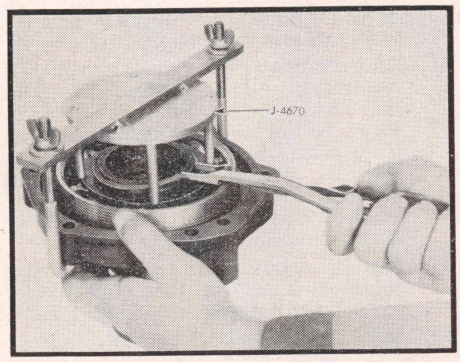

Fig. 27 Removing reverse piston-to-rear bearing retainer snap ring

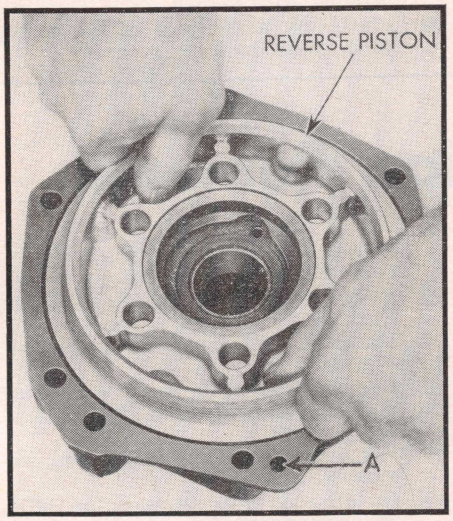

Fig. 28 Removing reverse clutch piston

plugs are tight in servo body.

3. Check rear band actuating lever for free operation, worn socket, or excessive wear at actuating pin.
4. Make sure oil rings are not broken. Check ring gap and freedom of rings in piston grooves.
5. Check booster spring for scores. Make sure ring grooves of piston are clean. Check booster piston stem for looseness.
6. Inspect accumulator piston for scores. Check piston stem for looseness and obstructed passage. Make sure ring groove is clean.
7. Check all springs for weakness, collapsed coils or distortion.
8. Inspect accumulator body for scores or obstructed passages. Make sure check valve is not broken or rivet loose. Be certain check valve plunger is free. See that hole in check valve is open and that valve seats flat on accumulator body.
9. Clean parts and wipe dry.

Reassembly

1. Parts should be lubricated with transmission fluid unless otherwise specified.
2. Position servo actuating lever flat on bench. All parts used in this step must be dry. Install pin and 18 needle bearings in lever. Carefully withdraw pin. While pressing downward with thumb on needle bearings, rotate thumb and lever in opposite directions. Needle bearings will lock in place.
3. Position rear band actuating lever in bracket of servo body and install clevis pin. Secure clevis pin with cotter pin.
4. Install oil rings in grooves of pistons.
5. Compress oil ring and install accumulator piston in its body.
6. With accumulator piston seated on soft block of wood, position tapered end of accumulator apply spring over stem of piston. Tap spring into groove of stem with plastic hammer, Fig. 24.
7. Install spring in booster piston, being sure spring fits against bottom of piston.
8. Install booster piston and spring in accumulator body.
9. Install exhaust valve and spring in accumulator body.
10. Position new gasket on accumulator body.
11. Compress booster piston oil ring, then install servo body over accumulator and piston assembly, lining up bosses of both bodies. Guide stem of booster piston through small hole in servo body.
12. Place assembly in spring compressor, Fig. 20. After assembly, tighten spring retainer bolts to 10-13 lb. ft.
13. Test operation of servo by applying air pressure in rear band release passage, Fig. 23.

REVERSE UNIT

Before the reverse unit can be removed, it is necessary to remove the oil pan, side cover, control valve, parking brake bracket, governor, front and rear servos and rear pump. How these units are removed has been outlined previously.

Remove the six reverse drive flange attaching cap screws; the drive flange can be held from turning by using a hammer handle as a lever on the rear band strut.

Insert a screwdriver or a suitable spacer, Fig. 25, between the center bearing cap and rear clutch drum to prevent the drum from moving forward. This will prevent the forward clutch plate from dropping off the front end of the rear clutch hub. Should this happen the transmission will have to be removed to replace it.

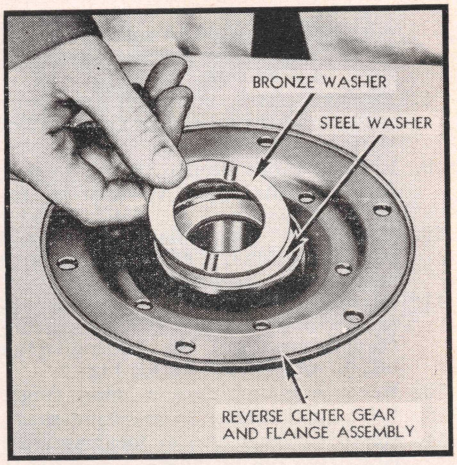

Fig. 29 Installation of thrust washers

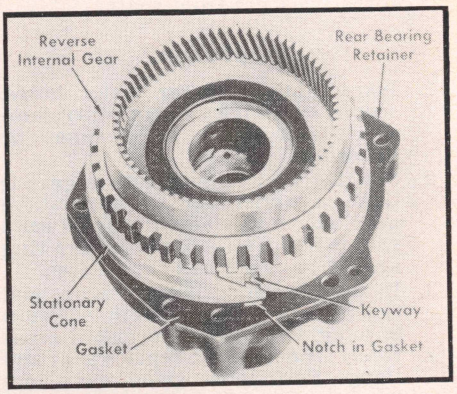

Fig. 30 Installation of reverse internal gear and stationary cone

Unfasten the rear bearing retainer from the transmission and withdraw the retainer and reverse unit from the mainshaft. Take out the reverse clutch stationary cone key to prevent its loss, Fig. 25.

Disassembly

1. Remove speedometer driven gear and sleeve from rear bearing retainer.
2. Remove snap ring from output shaft. Remove output shaft.
3. Compress reverse stationary cone with hands and lift off internal gear and clutch cone, Fig. 26.
4. Remove snap ring and bearing from bearing retainer.
5. Mount bearing retainer in compressor tool shown in Fig. 27, and remove the large snap ring.
6. Remove the tool and take out the release spring retainer washer and six piston release springs.
7. Remove clutch piston from bearing retainer by lifting straight out. *It*

may be necessary to apply air pressure behind piston to aid in removal. If so, apply the pressure to small hole "A", Fig. 28.

8. Remove piston outer oil seal from piston and inner oil seal from hub of rear bearing retainer.
9. Remove large bronze thrust washer from internal gear or bearing retainer.
10. Use snap ring pliers to expand clutch stationary cone and remove cone from internal gear.
11. Remove clutch release spring retainer and release (wave) spring from internal gear by rotating to the left to release retaining lugs.
12. Remove planet carrier snap ring.
13. Lift planet carrier from output shaft.
14. Remove planet carrier locating snap ring from output shaft.
15. Lift center gear and flange from output shaft.
16. Remove center gear steel and bronze thrust washers from shaft.

Inspection

1. Inspect all parts for nicks, burrs, scores, excessive wear or other damage. Check springs for weakness or distortion.
2. See that rear oil pump drive gear is tight on carrier and that pump drive gear ball is in place. If gap in snap ring is not over ball, move snap ring around to where ball can be seen.
3. Inspect reverse center gear and flange for damaged teeth or worn bushing. Gear is not furnished separately; if necessary, replace gear and flange. Position flange on rear planetary unit internal gear and check for distortion.
4. Check fit of key in cone slot.
5. Make sure oil passages in rear bearing retainer are open.
6. Clean all parts and wipe dry.

Reassembly

1. Install thrust washers in drive flange recess as shown in Fig. 29.
2. Insert output shaft through drive flange and center gear until planet carrier bottoms on the two thrust washers.
3. Keep thrust washers from moving and set output shaft on bench with carrier end down.
4. Install planet carrier-to-output shaft snap ring.
5. Install planet carrier over output shaft with rear oil pump drive gear down, meshing pinions with center gear. Be sure assembly is bottomed against planet carrier snap ring.
6. Install snap ring in groove above planet carrier on output shaft.
7. Install clutch stationary cone on internal gear cone, using snap ring pliers to spread stationary cone for installation.
8. Position bronze internal gear thrust washer over collar of internal gear, retaining with grease.
9. Install clutch release (wave) spring and spring retainer on internal gear side of reverse internal gear. Open ends of spring must be down against internal gear and midway between two of three locating holes. Depress retainer and twist clockwise to engage lugs.
10. Install clutch piston inner seal with lip down in seal groove of rear bearing retainer hub.
11. Position piston inner seal by inserting clutch piston into bore of bearing retainer. Then remove clutch piston.
12. Install piston outer seal in groove of reverse piston with lip of seal toward flat side of piston.
13. Install reverse piston in rear bearing retainer. Because of interference between ledge inside rear bearing retainer and piston outer seal a suitable sleeve or Tool J-4752 must be used to install the piston. After installation, run a .010" feeler around the piston to make sure the outer seal is properly positioned.
14. Insert six clutch piston release springs in their bores of clutch piston.
15. Position release spring retainer on release springs and lay snap ring in position. Then compress springs with tool shown in Fig. 27.
16. Remove compressor tool and install internal gear and stationary cone in rear bearing retainer as follows: While compressing clutch stationary cone with the hands as shown in Fig. 26, install gear and cone in bearing retainer. Position keyway of cone so it will line up with keyway in transmission case, Fig. 30.
17. Install output shaft to rear bearing retainer, meshing teeth of planet carrier with teeth of internal gear.
18. Install output shaft bearing and the two snap rings in rear bearing retainer.
19. Install speedometer driven gear.
20. Stick a new gasket on rear bearing retainer with grease.
21. Place key in keyway of stationary cone, retaining with grease.

Repairs Requiring Transmission Removal

TRANSMISSION, DISASSEMBLE

1. Strip the fluid coupling parts from the mainshaft. Remove the torus cover by working neck of cover gently over oil seal; then pull cover out with a quick jerk, Fig. 31.
2. With torus members removed, remove driven torus snap ring from mainshaft.
3. Remove control valve, parking brake bracket, front and rear servos, rear oil pump, governor and pressure regulator as outlined previously.
4. At this time the mainshaft end play should be checked to determine the correct size selective thickness thrust washer to be used when reassembling the transmission. Mount a dial indicator as shown in Fig. 32 and move the mainshaft back and forth while holding the mainshaft end play guide with a screwdriver as shown. Correct end play should be .004-.015". Do not force mainshaft as this will produce an inaccurate reading. *If end play is not within specified limits, record the amount of end play so the proper thickness washer can be installed when the transmission is reassembled.*

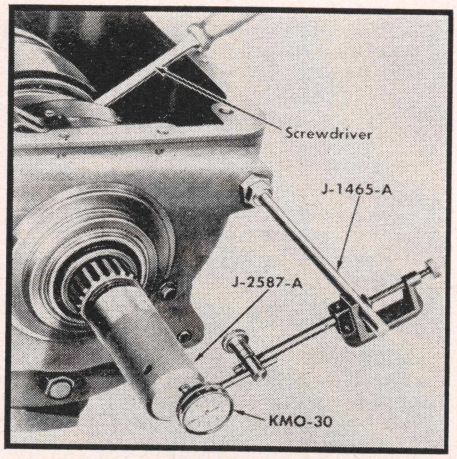

Fig. 32 Checking mainshaft end play

5. Remove intermediate shaft snap ring and steel and bronze thrust washers from planet carrier shaft.
6. Remove front pump locating washer, Fig. 33.
7. Unfasten and remove front pump, Fig. 34.
8. Remove front drive gear rear thrust washer (bronze) from front planet carrier shaft.
9. Remove reverse unit as outlined previously.
10. Install rear hub retainer tool, Fig. 35, on rear unit drum.
11. Remove two center bearing cap bolts and lock plate. Then lift front and rear planetary units from case.
12. Remove rear clutch hub rear snap ring.
13. Lift rear unit from shaft.
14. Remove center bearing cap from oil delivery sleeve.
15. Remove rear clutch hub washer and snap ring.
16. Slide oil delivery sleeve off shaft.
17. While holding snap ring pliers in one hand and using the other hand to guide snap ring, remove ring from shaft, Fig. 36.

Fig. 31 Exploded view of transmission

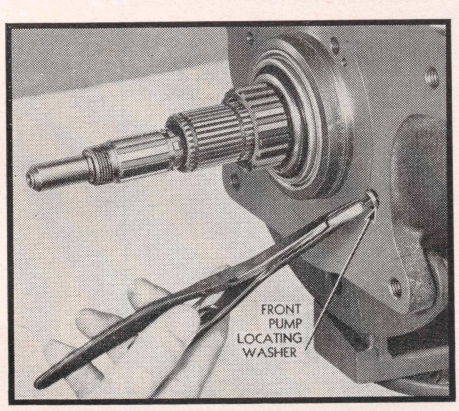

Fig. 33 Removing front pump locating washer

FRONT PUMP REPAIRS

Disassemble, Fig. 37

1. Remove pump from drive gear.
2. Separate cover from body.
3. Lift body from cover.
4. Press valve guide with blunt screwdriver and slip retaining pin from body.
5. Remove pump relief valve and related parts.
6. Remove intake pipe oil seal.
7. Mark outer face of rotor with pencil or prussian blue so it will be installed in same relative position.
8. Remove remaining parts from body and cover.
9. With a chisel, remove oil seal from cover and discard seal.

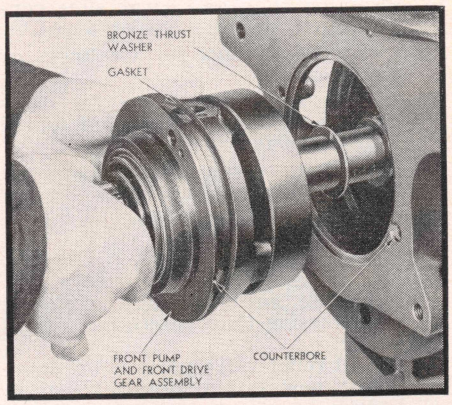

Fig. 34 Removing front pump and drive gear

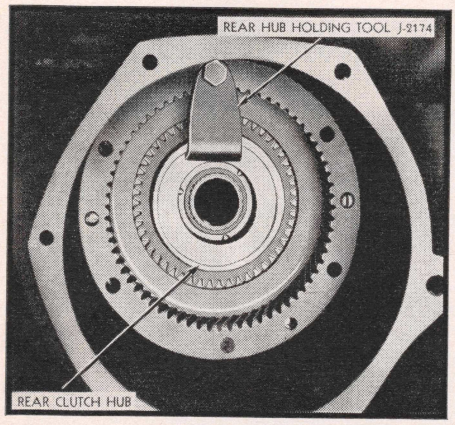

Fig. 35 Rear hub retainer tool in position

Inspection

1. Referring to Fig. 37, check pump slide bleed holes for dirt or restrictions. A piece of tag wire should be pushed through holes to make sure they are open.
2. Make sure slide is free in pump cover. Examine slide for nicks, scores or excessive wear.
3. Examine vanes for scores, burrs or nicks. Vanes will have a distinct polished wear pattern on side bearing against slide. Check vanes in slot of rotor for freeness.
4. Check pressure regulator valve in its bore for freeness.
5. Check freedom of pump relief valve in its bore. Check relief valve for nicks or burrs.
6. Check oil seal ring in groove of pump cover for freeness. Make sure ring is not broken. Check ring gap.
7. Inspect pump bushing for scores or flaking. Slight wear is permissible.
8. Check keyway in rotor for burrs or wear. Inspect all rotor contact surfaces for wear, burrs or nicks.
9. Make sure all passageways are free of restrictions.
10. Inspect pump body and cover for cracks or damage. Make sure the two dowel pins in cover are not loose. Check mating surfaces of body and cover for nicks or scores.
11. Examine body and cover slide contact surfaces for nicks or burrs.
12. Check all springs for weakness or distortion.
13. Inspect front drive gear for damaged teeth, worn bushings, or scored contact surfaces.
14. Inspect drive gear key and keyway in gear for wear or burrs.
15. Clean all parts and wipe dry.

Reassembly

1. Lubricate each moving part with transmission fluid before part is installed.
2. Install relief valve parts.
3. Insert new intake pipe oil seal in body.
4. Install priming springs and slide in cover.
5. Install on vane ring. Then install rotor in cover with previously marked face of rotor up.
6. Install seven pump vanes in slots of rotor. Be sure vanes fit between *vane ring and slide. Inspect vanes for wear pattern. One edge of vane will be polished for its entire length; this edge should face slide. The opposite edge will be polished only where it contacts vane rings.*
7. Center rotor in slide and install second vane ring.
8. Check with feeler gauge between vane and slide. With vanes contacting slide on one side, clearance should not exceed .003″ on opposite side. If clearance is excessive, replace pump.
9. Assemble body to cover and tighten attaching bolts to 12-15 lb. ft. torque.
10. Move rotor by hand to make sure rotor, vanes and slide move freely. After compressing priming spring, make sure it will return slide after spring is released.
11. Install new oil seal ring in groove of cover. Then install new front cover oil seal (step side up) in cover. Lubricate rubber and felt portions of oil seal before installing.
12. Apply sealing compound (Permatex No. 3) around edge of oil seal and cover.
13. Assemble pump on drive gear, being sure they assemble freely.

OIL DELIVERY SLEEVE

1. Examine oil delivery sleeve for scored bearing surface.
2. Inspect oil seal ring grooves to see that they are clean and not damaged. Check for freedom of rings in sleeve grooves.
3. Insert paper clip, Fig. 38, through both oil holes to see that passages are open. End of paper clip must protrude through passage as illustrated.
4. Test oil delivery sleeve for leaks as follows: Position sleeve in case with dowel hole toward case. Install center bearing cap with dowel in one of the two oil holes. Install and tighten center bearing cap bolts. Make sure sleeve is tight and cannot be rocked. *If sleeve can be rocked, a new sleeve must be installed. If the new sleeve can be rocked, transmission case must be replaced since center bearing cap is sold only with matched transmission case.*
5. Apply transmission fluid on each side of center bearing cap. Using a blow gun (J-4353-1) connected to a source of air pressure, apply pressure to each of clutch holes, Fig. 39, in side of transmission case.
6. If leakage is indicated, attempt correction by installing new oil delivery sleeve. If the new sleeve leaks, dress the center bearing cap down with fine emery cloth on a surface plate. Repeat test and if sleeve still leaks. replace transmission case.
7. Remove sleeve from case.

Fig. 36 Removing front unit rear snap ring

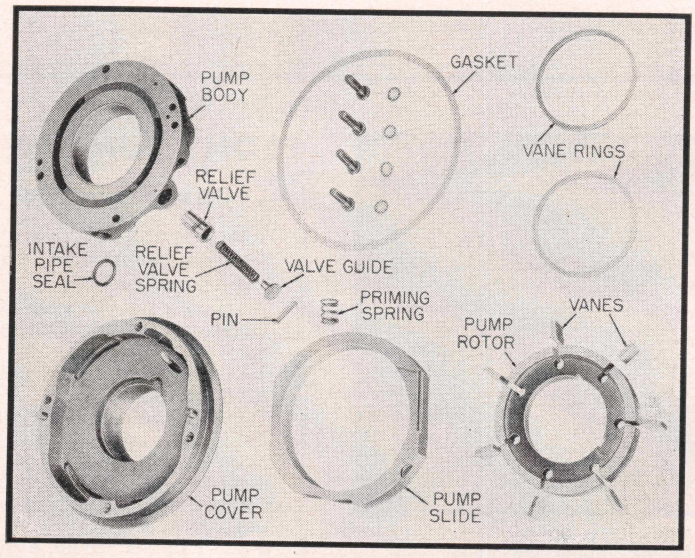

Fig. 37 Layout of front pump parts

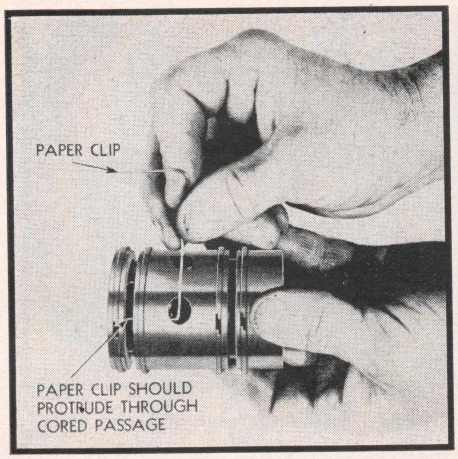

Fig. 38 Checking passages in oil delivery sleeve

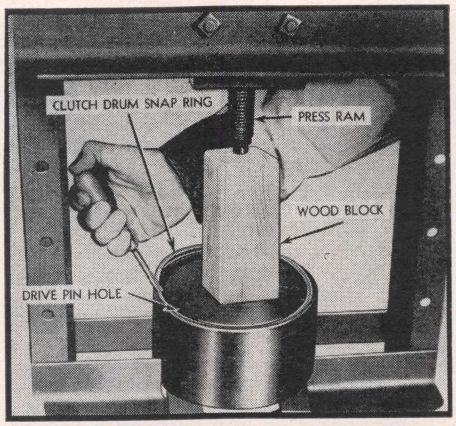

Fig. 40 Removing clutch drum snap ring

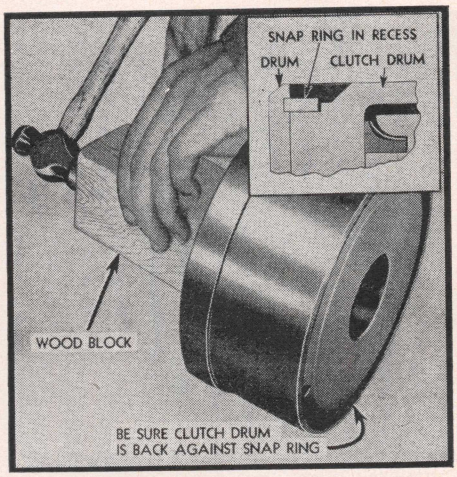

Fig. 42 Seating rear clutch drum against snap ring

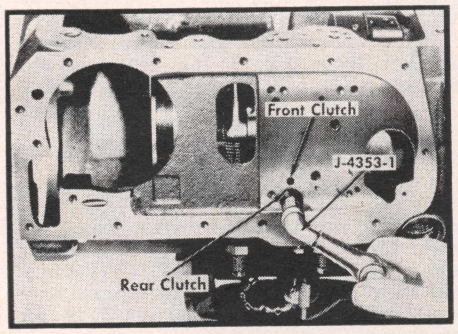

Fig. 39 Clutch oil passage identification

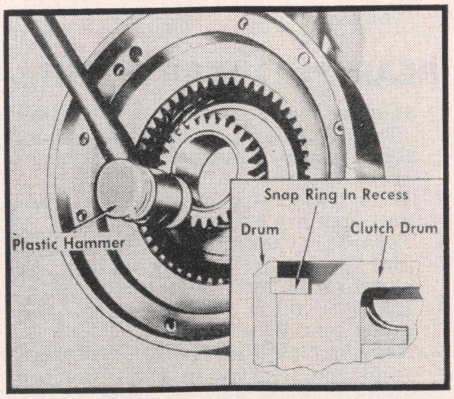

Fig. 41 Seating front clutch drum against snap ring

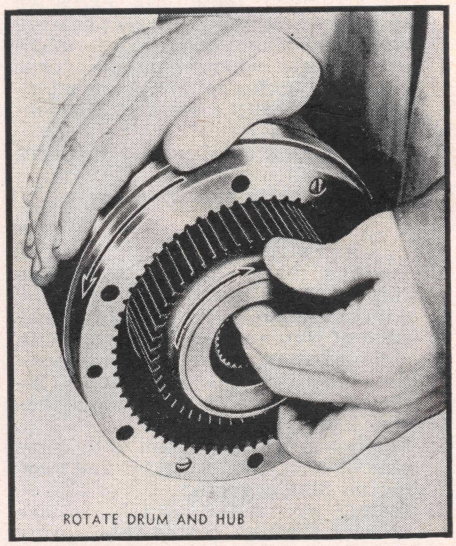

Fig. 43 Installing clutch hub by rotating parts as shown by arrows

BAND INSPECTION

1. Do not pry either band open or distort in any way. Bands are surface ground at the factory for drum fit.
2. Inspect both bands for burned or worn linings or loose rivets. If face of linings are worn down to bottom of grooves, replace band and lining assemblies.
3. Inspect steel bands for cracks or distortion.
4. Check strut on rear band for alignment and free pivoting.
5. Inspect anchor ends of front band for broken welds or worn sockets.
6. Inspect rear band release spring for weakness, distortion or collapsed coils.

FRONT PLANETARY UNIT

Disassembly

1. Remove clutch drum snap ring, Fig. 40.
2. Remove clutch drum with piston from front unit drum by tapping sun gear.
3. Remove inner and outer clutch release springs from front unit drum.
4. Remove clutch plates as a unit.
5. Hold clutch drum in hand and tap sun gear around its face to remove clutch piston, Fig. 41.
6. With blunt screwdriver, remove large clutch piston seal and expander from piston and small seal with expander from clutch drum. Discard seals and expanders.

Inspection

1. Inspect clutch drive pins for scoring, looseness or distortion. Replace drum assembly if any of these conditions are found. Pins are not furnished separately.
2. Inspect drum for deep grooves, scores or cracks at band or clutch plate surfaces.
3. Inspect clutch springs for weakness, collapsed coils or distortion. *Slight wear (bright) spots on side of outer springs, indicating slight contact with drum is permissible.*
4. Removing one clutch plate at a time, inspect steel plates for scored surfaces. Inspect composition plates for roughness or damage. If flakes of facing can be removed by scratching by thumb nail, plate must be replaced. Discoloration, however, is not an indication of failure.
5. Inspect clutch piston for scores, cracks or distortion. Make sure oil seal groove is clean.
6. Examine front clutch drum for scores in piston bore and oil delivery sleeve bore. Be sure oil seal groove is clean. Inspect gear teeth and thrust faces. Inspect clutch drum bushings for wear.

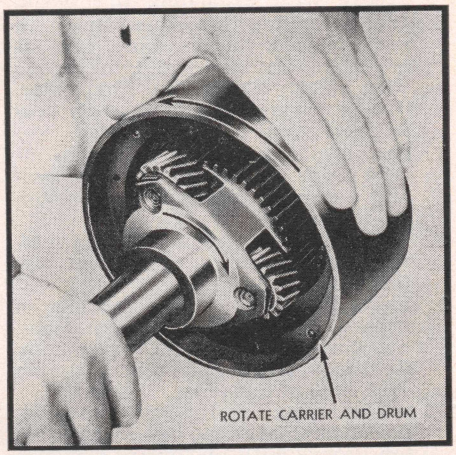

Fig. 44 Assembling front planet carrier, front drum and plates by rotating parts as shown by arrows

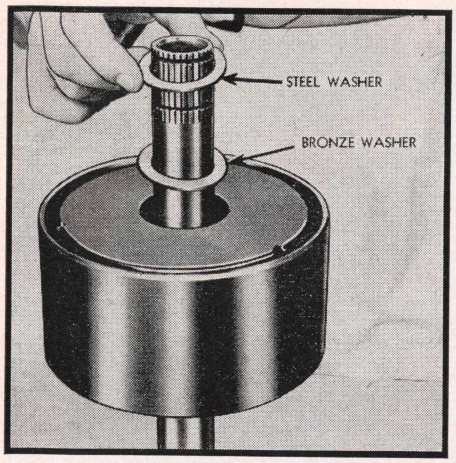

Fig. 45 Installing thrust washers on intermediate shaft

7. Inspect planet carrier pinion gears for damaged teeth and excessive roller bearing wear. Inspect bearing surface of planet carrier (intermediate) shaft, which contacts torus check valve, for roughness or nicks. Smooth off with a stone if this condition exists.
8. Check thrust washers for wear or scores.
9. Clean all parts and wipe dry.

Reassembly

1. Position planet carrier in holding fixture (J-2187) with clutch hub up.
2. Apply transmission fluid to both sides of clutch plates. Starting with a composition plate, install composition and steel plates alternately. Install steel plates with square notches over clutch drive pins.
3. Position front unit drum with drive pins up over hub of carrier and resting on pinion gears.
4. Install six outer clutch release springs through plates into spring holes of drum. Install six inner springs in outer springs.
5. Position new inner rubber seal on clutch drum above seal groove. Install new brass expander into seal groove with expanding lips down.
6. While holding brass expander in position with fingers, work new inner piston rubber seal into groove with lip down over brass expander. *Work expander well back under seal so brass edges are not exposed.*
7. Install clutch piston in drum to insure proper positioning of inner seal and expander. Then remove piston from drum.
8. Apply a small amount of transmission fluid to new large rubber piston seal.
9. Insert new large brass expander in groove in piston, with expanding lips toward flat surface of piston. Hold expander in place with thumb over ends of expander.
10. While holding piston and expander, insert new large rubber seal in piston groove with lip toward flat side of piston. Start seal into groove a short distance from point where thumb is holding expander ends. Work seal into groove toward thumb until seal is over expander ends. Then gradually work remainder of seal into groove.
11. Install piston in clutch drum. Apply hand pressure to face of piston and start seal into drum, using a smooth screwdriver in a wiping action. Rotate piston until it bottoms in drum and square notches in piston are aligned with holes in drum.
12. With sun gear down, install clutch drum and piston over planet carrier and into front drum, engaging release springs in pockets of clutch piston.
13. Lift unit from carrier and position in arbor press and apply only enough pressure to install snap ring. Position snap ring gap halfway between two of the drive pins.
14. Remove unit from press and tap sun gear to seat drum against snap ring, Fig. 41.

REAR PLANETARY UNIT

1. Remove clutch hub retainer bracket (Tool J-2174) from rear unit drum.
2. Remove clutch hub and thrust washer.
3. With rear unit in press as for front unit, remove snap ring.
4. Separate clutch drum from rear unit drum by tapping lightly on clutch drum rear thrust face.
5. Remove clutch release springs and guide pins from rear unit drum.
6. Remove clutch plates as a unit.
7. Hold clutch drum in hand and tap against inner hub of drum to remove clutch piston.

Inspection & Reassembly

Inspect this assembly in the same manner outlined for the front unit. Reassemble the unit in the reverse order of disassembly, following the same procedure for installing clutch piston seals as outlined for the front unit clutch.

Seat the rear clutch drum against the snap ring as illustrated in Fig. 42. After the clutch hub and thrust washer is installed into the clutch drive plates, rotate the hub and drum in opposite directions to mesh splines of hub with teeth of plates, Fig. 43. When properly installed, clutch hub should be flush or slightly below counterbore in drum.

Install rear clutch hub retainer bracket (tool J-2174) on rear unit to hold clutch hub in place (see Fig. 35).

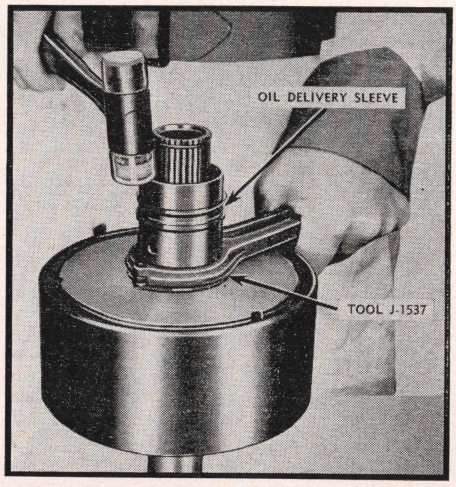

Fig. 46 Installation of oil delivery sleeve

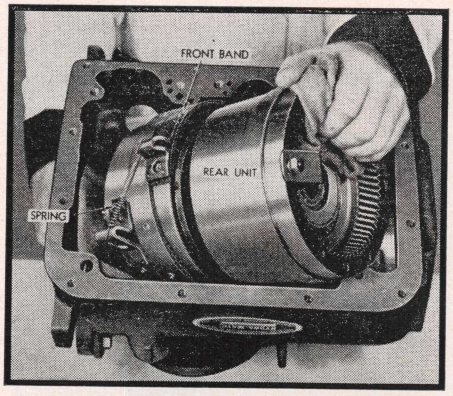

Fig. 47 Installing front and rear units

TRANSMISSION CASE INSPECTION

After cleaning transmission case, inspect for cracks, stripped threads, nicks and burrs. Poke a piece of 1/8" welding rod through all passages to remove any restrictions. Apply air pressure to all passages.

If band adjusting screw threads are stripped, transmission case must be replaced. Never tap oversize threads and insert oversize adjusting screws as it will be impossible to make proper external band adjustments.

TRANSMISSION, ASSEMBLE

1. Mount transmission case upside down in holding fixture.
2. Install front and rear band adjusting screws and lock nuts.
3. Install pressure take-off pipe plug in hole located between band adjusting screws. Tighten plug to 15-18 lb. ft. torque.

Assemble Planetary Units to Front Planet Carrier

1. Insert front carrier into front unit drum and clutch drive plates. Rotate carrier while working into position in front drum, Fig. 44.
2. Position carrier in holding fixture (J-2187).
3. Install thrust washers as shown in Fig. 45. Locating lug of steel thrust washer must fit over flat of intermediate shaft.
4. Position new locating snap ring on bench with tapered points up. With snap ring pliers held vertically, engage points of ring. While guiding ring with one hand, slide ring downward over intermediate shaft and

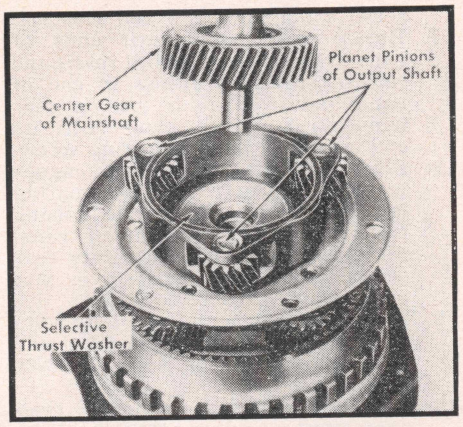

Fig. 48 Installing mainshaft in output shaft

into groove of shaft above steel thrust washer.

5. Position oil delivery sleeve on intermediate shaft of front planet carrier. Oil rings nearest end of sleeve must be down into front planetary unit.
6. Compress lower set of oil rings with compressor tool, Fig. 46. Tap sleeve until it bottoms in bore of front unit drum.
7. Install rear clutch hub snap ring in groove of planet carrier intermediate shaft. Then install snap ring spacer.
8. With compressor tool, compress exposed oil delivery sleeve rings. Latch handles of compressor securely.
9. Place rear planetary unit over intermediate shaft until it bottoms on compressor tool. Keeping rings compressed with tool, release handle latch and, while slightly releasing pressure on tool, push rear unit downward on oil delivery sleeve.
10. Remove compressor tool and install rear clutch hub rear snap ring.
11. Make sure both drums rotate with slight force. If either drum binds, disassemble the unit to correct cause of trouble.

Install Front & Rear Planetary Units

1. Position center bearing cap on oil delivery sleeve with dowel registered in dowel hole. *Cast taper on bearing cap should be toward front unit.*

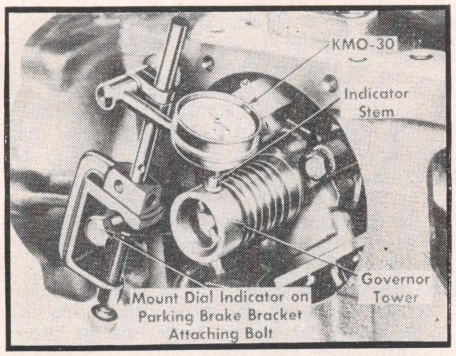

Fig. 49 Checking governor tower runout

2. Position front band over drum so short anchor end will fit over band adjusting screw when units are placed in case. Install suitable wire or spring to hold band on drum.
3. Guide planetary units in case as shown in Fig. 47.
4. Remove spring or wire from band and position anchor end of front band on adjusting screw.
5. Install rear band on drum so anchor end of band rests on adjusting screw.
6. Install new center bearing cap lock plate and attaching bolts, tightening bolts only finger tight.
7. Apply air pressure through each of the clutch passage holes in case. Listen for sound of clutch application.
8. Install large screwdriver between center bearing cap and rear clutch drum to prevent rear drum from moving forward.
9. Remove clutch hub retainer bracket (J-2174) from rear unit drum.
10. Coat rear clutch hub rear thrust washer with grease and stick it in the counterbore of rear clutch hub.

Install Reverse Unit & Mainshaft

1. If shaft did not have correct end play prior to disassembly, select proper size selective washer to obtain .004″ to .015″ end play. Eight sizes of thrust washers are available for this purpose.
2. Stick the correct size thrust washer in counterbore of output shaft with grease.
3. Insert mainshaft into output shaft, meshing center gear of mainshaft with planet pinions of output shaft, Fig. 48.
4. Insert mainshaft, output shaft and reverse unit through rear of case, guiding mainshaft through intermediate shaft of front planet carrier. Align stationary cone lock key with keyway in case and rear bearing retainer bolt holes with holes in case. *Rear bearing retainer will not fit tightly against case at this point.*
5. Just start five rear bearing retainer attaching bolts and parking brake pawl support bolt and lock.
6. Rotate mainshaft to align holes in reverse drive flange and rear unit drum, then install six attaching bolts and washers. After two of the bolts are centered finger tight, remove the wedging screwdriver. While holding drum with tool J-1459, tighten bolts to 10-13 lb. ft. torque. *Do not torque parking brake pawl support bolt at this time*
7. Test for freeness by turning mainshaft, output shaft and both drums.
8. On ¾ and 1 ton trucks, install new output shaft bearing oil seal in rear bearing retainer. Lubricate rubber and felt portions of seal before installation. Apply sealing compound (Permatex No. 3) to edge of seal and rear bearing retainer.
9. On all models, slide front universal joint yoke spacer and yoke on output shaft. Position yoke washer in counterbore of yoke and stake

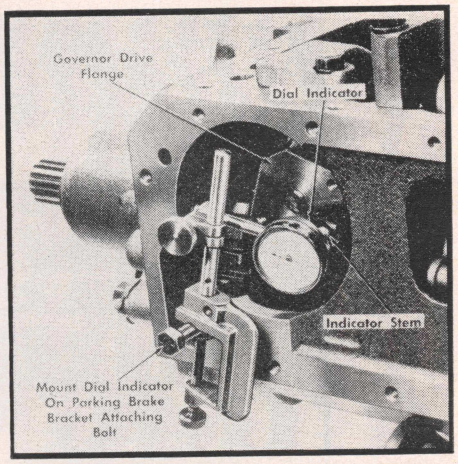

Fig. 50 Checking governor drive flange runout

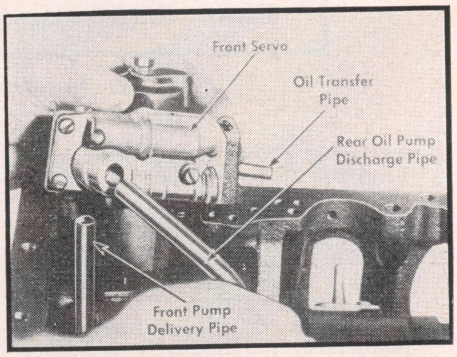

Fig. 51 Installing front servo

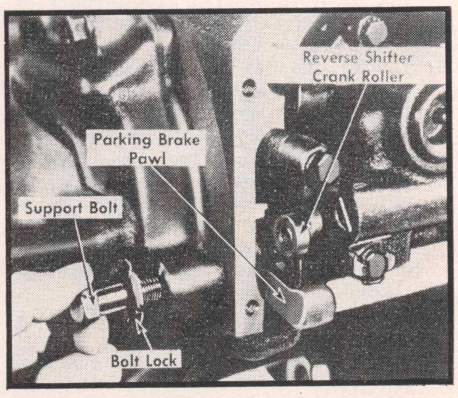

Fig. 52 Installing parking brake pawl support bolt and lock

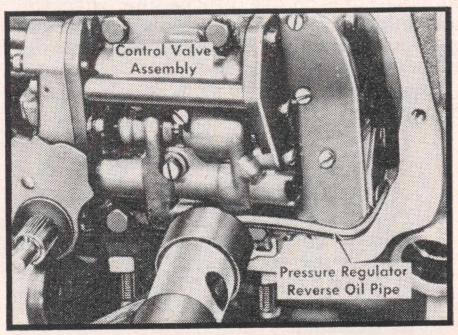

Fig. 53 Installation of reverse oil pipe

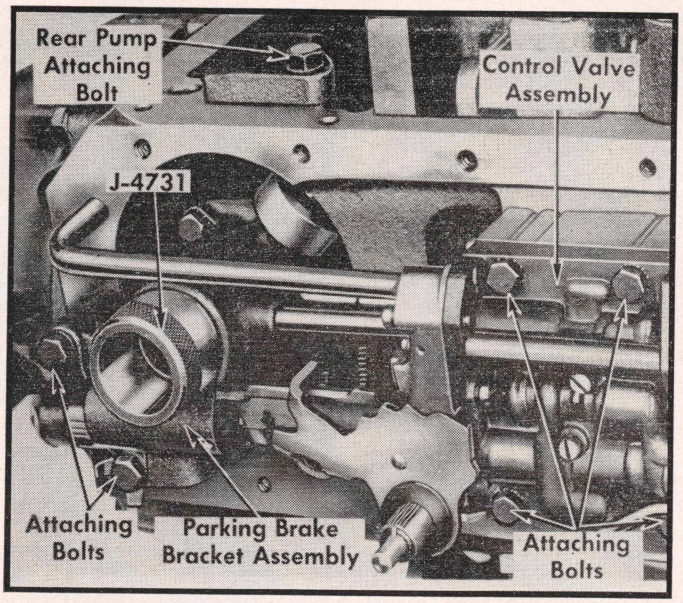

Fig. 54 Aligning governor

washer in place. Install special hex head bolt in bore of output shaft.

Install Front Oil Pump

1. Position thrust washer over intermediate shaft against shoulder of front planet carrier.
2. Install new "O" ring seal over front pump body and against pump cover.
3. Position front oil pump and drive gear over intermediate shaft, aligning locating washer counterbore in pump cover with counterbore in transmission case.
4. Install washer in counterbore of pump cover and case.
5. Install pump cover attaching bolts and tighten to 10-13 lb. ft. torque.
6. Install bronze and then steel thrust washers over intermediate shaft and against front end of front drive gear.
7. Install snap ring in groove of intermediate shaft, immediately forward of the two thrust washers just installed.
8. Tighten center bearing cap bolts evenly to 40-50 lb. ft. torque. Using large pliers, bend lock plate edges up against flats at bolt heads.

Mainshaft End Play

Mainshaft end play should be checked at this time before proceeding with the assembly of the transmission. Check end play as previously described when transmission was disassembled.

Install driven torus snap ring in groove of mainshaft.

Install Rear Oil Pump & Governor

1. Position large round governor weight toward front of case and locate one of reverse drive flange attaching bolts up. This will provide clearance for pump and governor to be installed.
2. Install pump and governor, rotating governor to mesh driven gear with bronze drive gear. Attach pump to case and tighten bolts to 15-18 lb. ft. torque.
3. Install rear pump discharge pipe into passage of pump.

Checking Governor & Drive Flange Runout

1. Mount dial indicator as shown in Fig. 49 and check runout of governor tower. Rotate output shaft several revolutions and note reading. If runout exceeds .005", remove governor from drive flange and reinstall it 180° from original position and recheck runout.
2. If runout still exceeds .005", remove governor from drive flange and mount dial indicator as shown in Fig. 50.
3. Rotate output shaft several revolutions and if drive flange runout is less than .002", install a new governor. If runout exceeds .002", correct the condition by installing one or all of the following parts: Governor drive flange, gear set, or complete rear oil pump assembly.

Install Front & Rear Servos

1. Loosen but do not remove two front oil pump attaching bolts.
2. Insert front pump delivery pipe in front pump.
3. Position front servo with piston stem in slot on end of front band and front oil pump delivery pipe aligned with passage in servo body.
4. While holding front servo, align rear oil pump discharge pipe with passage in front servo valve body, Fig. 51.
5. Move front servo toward position on case while guiding front pump delivery pipe and rear pump discharge pipe into proper passages in front servo.
6. Just start (2 or 3 threads) two front servo attaching bolts and washers.
7. Rotate rear band until ends of band are exposed. Install rear band release spring in recess in end of band and over guide pin on rear band strut. Turn band until its end is against band adjusting screw.
8. Place rear servo in position, engaging rear band strut with actuating lever of servo and, while raising front servo slightly, enter oil transfer pipe from front servo into rear servo. Then push both servos into position on transmission case.
9. Enter two rear servo attaching bolts and washers. Then tighten front and rear servo attaching bolts to 23-28 lb. ft. torque.
10. Retighten the two previously loosened front oil pump attaching bolts to 10-13 lb. ft. torque.

Install Oil Pressure Regulator

Install pressure regulator in transmission case and tighten regulator valve plug to 40-50 lb. ft. torque.

Install Parking Brake & Control Valve

1. Remove parking brake pawl support bolt from rear bearing retainer.
2. Position brake pawl in case as far down as it will go.
3. Position gaps in oil rings on governor tower up to facilitate installation. Place chamfered side of brake bracket oil delivery sleeve over end of governor tower. Press brake bracket gently into position, guiding oil rings on governor tower into oil delivery sleeve of brake bracket.
4. Install reverse shifter crank roller on brake pawl crank. Raise pawl to position and install pawl support bolt and bolt lock to transmission case, Fig. 52. Tighten bolt to 23-28 lb. ft. torque.
5. Bend one lip of lock against bolt and two lips against rear bearing retainer.
6. Install parking brake bracket attaching bolts, blocker piston stop pin retainer and lock washer. Do not tighten bolts. Leave brake bracket ⅛" away from transmission case. *Be sure to install blocker piston stop pin retainer on bottom bolt. This retainer keeps parking blocker stop pin in place, seals against oil pressure leaking through bolt hole and locks bracket-to-case bolt in place.*
7. Install reverse clutch oil pipe with "L" end in transmission case.
8. Install two oil delivery pipes in parking brake bracket.
9. Position pawl return spring over inside governor oil delivery pipe, then hook other end of spring over brake lever pin.
10. Install control valve and start four attaching bolts. Press control valve and brake bracket against case and tighten valve attaching bolts to 6-8 lb. ft. torque.
11. Insert short end of pressure regulator reverse oil pipe into bore of control valve and long end of pipe into case, Fig. 53.
12. Loosen two rear oil pump attaching

bolts. Position governor aligning tool, Fig. 54.

13. Tighten rear oil pump bolts and brake bracket to 15-18 lb. ft. torque.
14. Rotate tool. Turn mainshaft to rotate governor, which should turn freely. Turn mainshaft to turn governor ¼ turn. Recheck governor and tool for freeness. If governor or tool bind at any point, loosen parking brake bracket and/or rear oil pump and reposition to give freedom to governor. Recheck governor each ¼ turn for a complete revolution.
15. Remove governor aligning tool.
16. Install governor oil delivery pipe.
17. Turn mainshaft to rotate governor one full turn. Make sure governor weights do not strike oil delivery pipe. Pipe should have correct bend to provide clearance for governor weights in their outward positions.

Final Assembly

Adjust bands as outlined elsewhere in this section. Then install side cover, oil pan and screen. Move transmission outer shift lever to neutral position. Install oil breather and indicator in case.

AUTOCAR

INDEX OF SERVICE OPERATIONS

PAGE NO.

AXLES, DRIVING
Autocar Axle Service 344
Eaton Axle Service 176
Locking Differentials 169
Timken Axle Service 209

BRAKES
Adjustments 252
Air Brake System 259
Hydraulic Brake System 250
Vacuum Brake Boosters 268

CLUTCH 340

COOLING SYSTEM
Cooling System Capacity 330
Water Pump Repairs 338

ELECTRIC SYSTEM
Alternators & Regulators 37
Dash Guage Service 93
Distributor Specifications 332
Distributor Service 7
Generator Specifications 331
Generator & Regulator Service 27
Ignition, Transistorized 22
Ignition Timing 339
Starting Motor Specifications 332
Starting Motor Service 65
Starter Switch Service 85

ENGINE
Camshaft & Bearings 336
Crankshaft End Play, Adjust 338
Crankshaft Bearing Specifications 332
Crankshaft Rear Oil Seal, Replace 338
Cylinder Head, Replace 333
Cylinder Sleeves, Replace 337
Main Bearings, Replace 337
Piston Pins, Replace 337
Piston Rings, Replace 337
Piston & Ring Specifications 332
Piston & Rod, Assemble 337
Pistons & Rods, Remove 337
Pistons, Replace 337

PAGE NO.

Rocker Arm Service 333
Rod Bearings, Replace 337
Timing Gears, Replace 336
Valves, Adjust 334
Valves, Grind 335
Valve Guides 336
Valve Lifters 336
Valve Seat Inserts 335
Valve Spring Testing 335
Valve Specifications 331

ENGINE OILING
Crankcase Capacity 330
Crankcase Ventilation 6
Oil Pump Repairs 338

FUEL SYSTEM
Carburetor Adjustments 340
Crankcase Ventilation 6
Fuel Pump Service 104
L.P.G. Carburetion 109

SPECIFICATIONS
Carburetor Adjustment 340
Crankshaft & Bearing 332
Distributor 332
Generator & Regulator 331
Piston, Pin & Ring 332
Starting Motor 332
Tune Up 331
Valve 331
Wheel Alignment 333

STEERING GEARS 346

TRANSFER CASES 242

TRANSMISSIONS
Clark 110
Fuller 122
New Process 135
Spicer 141
Warner 164
Powermatic 281

TUNE UP SERVICE 2

MODEL INDEX & ENGINE APPLICATION

ENGINE IDENTIFICATION—Autocar Service Parts Identification Plate is located inside of truck cab. Stamped on the plate is the model of the engine, transmission, auxiliary transmission, rear axle and front axle. This data represents only the equipment on the vehicle when it was shipped from the factory. Prior to Autocar's assimilation by The White Motor Company, identification plates were attached to engines and transmissions.

Gasoline Engines

Model	Year	Engine Make	Basic Engine Model ②	Crank-case Refill Capacity, Qts.	Cooling System Capacity, Qts.
C50, D, T	1952–53	Autocar	377	10	①
C5064	1952–53	Autocar	377	10	①
C65T	1952–54	Autocar	447	12	①
C65, D	1954	Autocar	447	12	①
C65, D, T	1955–56	White	390A	15	①
C65, D, T	1957–63	White	490A	16	①
CL65, D, T	1954	Le Roi	H540	10	①
C5564	1960–63	White	6-185A	8	①
C5566	1960–63	White	6-185A	8	①
C5764-OH	1960–61	White	6-185A	8	①
C5766-OH	1961–62	White	6-185A	8	①
C6564, T	1954	Autocar	447	16	①
C6564	1955–56	White	390A	16	①
C6564, T	1957–63	White	490A	16	①
CL6564	1954	Le Roi	H540	10	①
C6764	1955–56	White	390A	16	①
C6764	1957–58	White	490A	16	①
C70, D, T	1952–53	Autocar	447	12	①
C7064	1952–53	Autocar	447	12	①
C70S, TS	1952–53	Autocar	501	12	①
C7064S	1952–53	Autocar	501	12	①
C84T	1954	Autocar	501	16	①
CL84T	1954	Le Roi	H540	10	①
C85, T	1954	Autocar	501	16	①
C85, T	1959–63	White	490A	16	①
C87	1955–56	White	390A	16	①
C87, D-OH	1957–62	White	490A	16	①
C90, T, D	1952–54	Autocar	501	12	①
C9064	1952–53	Autocar	501	12	①
C9564	1959	White	490A	16	①
C9764, S OH	1957–63	White	490A	16	①
CL10364S	1954	Le Roi	H540	10	①
C10364	1955–56	White	390A	16	①
C10364S OH	1957–63	White	490A	16	①

Diesel Engines

Model	Year	Engine Make	Basic Engine Model ②	Crank-case Refill Capacity, Qts.	Cooling System Capacity, Qts.
A75T	1960–61	Cummins	NH-195	28	①
A75T	1962–63	Cummins	NH-220	28	①
A7564T	1960–61	Cummins	NH-195	28	①
A7564T	1962–63	Cummins	NH-220	28	①
A102T	1960–61	Cummins	NH-195	28	①
A102T	1962–63	Cummins	NH-220	28	①
A10264	1960–61	Cummins	NH-195	28	①
A10264	1962–63	Cummins	NH-220	28	①
A10464LS	1961–63	Cummins	NH-220	28	①
DC65T, TL	1952–54	Cummins	JBS	12	①
DC65, T, TL	1955–60	Cummins	JT		①
DCU70, T, TL	1960–61	Cummins	NH-195	28	①
DCU70, T, TL	1962–63	Cummins	HRF	28	①
DCU7064T, TL	1960–61	Cummins	NH-195	28	①
DCU7064T, TL	1962–63	Cummins	HRF	28	①
DCU72T, TL	1962–63	Cummins	V8-265	20	①
DCV7264T, TL	1962–63	Cummins	V8-265	20	①
DCV73T, TL	1962–63	Cummins	V8-265	20	①
DCV7364T, TL	1962–63	Cummins	V8-265	20	①
DC74T	1960–61	Cummins	NH-195	28	①
DC74T	1962–63	Cummins	NH-220	28	①
DC75T	1960–61	Cummins	NH-195	28	①
DC75T	1962–63	Cummins	NH-220	28	①
DC75TL	1960–61	Cummins	NH-195	28	①
DC75TL	1962–63	Cummins	NH-220	28	①
DCU75T	1960–61	Cummins	NH-195	28	①
DCU75T	1962–63	Cummins	NH-220	28	①
DC85	1960–61	Cummins	NH-195	28	①
DC85	1962–63	Cummins	NH-220	28	①
DC87, D	1957–61	Cummins	HRB	28	①
DC87, D	1962–63	Cummins	HRF	28	①
DC102, T, TL	1954–61	Cummins	HRB	28	①
DC102, T, TL	1962–63	Cummins	NH-220	28	①
DC103D	1960–63	Cummins	NH-220	28	①
DC103T	1960–61	Cummins	NH-195	28	①
DC103T	1962–63	Cummins	NH-220	28	①
DC6564	1957–60	Cummins	JT		①
DC6764	1957–60	Cummins	JT		①
DC7564, T, TL	1960–61	Cummins	NH-195	28	①
DC7564, T, TL	1962–63	Cummins	NH-220	28	①
DC9564	1960–61	Cummins	NH-195	28	①
DC9564	1962–63	Cummins	NH-220	28	①
DC9564TMS	1961–63	Cummins	NH-250	28	①
DC9764S	1957–60	Cummins	HRB	28	①
DC9964 OHNES	1960–61	Cummins	NH-195	28	①
DC9964 OHNES	1962–63	Cummins	HRF	28	①
DC10044N	1952–53	Cummins	HRB	28	①
DC10064, S	1952–53	Cummins	HRB	28	①
DC10264, L	1960–61	Cummins	NH-195	28	①
DC10264, L	1962–63	Cummins	NH-220	28	①
DC10364S OH	1954–59	Cummins	HRB	28	①
DC10364S OH	1960–61	Cummins	NH-195	28	①
DC10364S	1962–63	Cummins	NH-220	28	①
DC10464LS	1960–61	Cummins	NH-220	28	①
DC10464LS	1961–63	Cummins	NH-220	28	①
DC20364S OH	1960–63	Cummins	NH-220	28	①

①—Cooling system capacity varies depending on engine and radiator installed.

②—Optional engines available in most Diesel models.

GENERAL ENGINE SPECIFICATIONS

Year	Engine Model	No. Cyls. & Valve Location	Bore & Stroke	Piston Displacement, Cu. In.	Compression Ratio	Maximum Brake H. P. @ R. P. M.	Maximum Torque, Lb. Ft. @ R. P. M.	Normal Oil Pressure, Lbs.
1952–54	Autocar 377	6-In Block	4 x 5	377	6.00	119 @ 2800	288 @ 1100	40
1952–54	Autocar 447	6-In Block	4¼ x 5¼	447	6.00	145 @ 2700	353 @ 1100	40
1952–54	Autocar 501	6-In Block	4½ x 5¼	501	6.00	165 @ 2700	400 @ 1100	40
1954	Le Roi H540	8-In Head	4½ x 4¼	540	6.70	207 @ 3000	460 @ 1800	40
1955–57	White 390A	6-In Block	4¾ x 5	531	6.40	200 @ 2900	440 @ 1400	40
1957–63	White 490A	6-In Block	4¾ x 5	531	6.40	215 @ 2900	440 @ 1200	40
1960–63	White 6-185A	6-In Head	4¼ x 4¼	362	7.50	185 @ 3400	320 @ 1200	40

TUNE UP & VALVE SPECIFICATIONS

Year	Engine Model	Firing Order	Spark Plugs		Ignition Timing		Cylinder Head Torque, Lb. Ft.	Valve Seat Angle, Degrees	Valve Clearance H-Hot C-Cold		Valve Spring Pressure Lb. @ In. Length
			Type ③	Gap	Timing Mark	Location			Intake	Exhaust	
1952–54	Autocar 377	153624	D16	.025	Dot	Flywheel	95	45	.021C	.025C	②
1952–54	Autocar 447	153624	D16	.025	Dot	Flywheel	95	45	.021C	.025C	②
1952–54	Autocar 501	153624	D16	.025	Dot	Flywheel	95	45	.021C	.025C	②
1954	Le Roi	18736542	J8	.025	①	Pulley	90	45	.013H	.013H	56 @ 2
1955–57	White 390A	153624	D14	.025	Line	Flywheel	105	45	Zero	Zero	100 @ 2¼
1957–63	White 490A	153624	D10	.025	Line	Flywheel	105–110	45	Zero	Zero	182 @ 1.612
1960–63	White 6-185A	153624	J6	.025	Line	Damper	100	30	.023C	.023C	186 @ 13/32

①—⅝″ before mark on pulley. ②—Without Rotocaps 65 @ 2⅝″, with Rotocaps 65 @ 2 15/32″. ③—Champion. Normal Service.

GENERATOR & REGULATOR SPECIFICATIONS

★To polarize generator, reconnect leads to regulator; then momentarily connect a jumper wire from the "Gen" to the "Bat" terminals of the regulator.

Generator						Regulator					
Gen. No.	Rotation ①	Brush Spring Tension, Oz.	Rated Cap. Amps.	Gen. Field Ground Location★	Field Current	Reg. No.	Cutout Relay Closing Voltage	Cutout Relay Arm. Air Gap, In.	Voltage Setting	Current Setting	Current & Voltage Reg. Arm. Air, Gap, In.
1106665	CC	23	31	External	1.13–1.27②	1118328	12.8	.020	14.3	31	.075
1106801	C	20	40	External	1.37–1.50②	1118338	12.8	.020	14.3	40	.075
1106805	CC	20	50	External	1.37–1.50②	1118880	12.8	.020	14.5	50	.075
1106808	C	20	50	External	1.37–1.50②	1118838	12.8	.020	14.3	50	.075
1106815	CC	20	50	External	1.37–1.50②	1118368	12.8	.020	14.3	50	.075
1106816	CC	20	40	External	1.37–1.50②	1118337	12.8	.020	14.3	40	.075
1106821	C	20	40	External	1.37–1.50②	1118886	12.8	.020	14.5	40	.075
1106822	C	20	50	External	1.37–1.50②	1118880	12.8	.020	14.5	50	.075
1106849	CC	20	50	External	1.37–1.50②	1118838	12.8	.020	14.5	50	.075
1106850	CC	20	40	External	1.37–1.50②	1118886	12.8	.020	14.5	40	.075
1106909	CC	20	50	External	1.37–1.50②	1118881	12.6	.020	14.6	50	.075
GGA-4803	CC	34–41	40	External	1.10–1.30③	VRX-4001B	12.8	.031	14.0	40	.048
GGA-4814F	C	34–41	40	External	1.10–1.30③	VAT-4004AX	12.8	.031	14.0	40	.048
GGA-4814G	C	34–41	40	External	1.10–1.30③	VAT-4004AX	12.8	.031	14.0	40	.048

① As viewed from drive end; C—Clockwise. CC—Counterclockwise. ② At 12 volts. ③ At 10 volts.

PISTON, PIN, RING, CRANKSHAFT & BEARING SPECIFICATIONS

Year	Engine Model	Piston Clearance, Inch④	Wristpin Diameter	Ring End Gap, In. (Minimum)		Crank Pin Diameter, Inch	Rod Bearing Clearance, In.	Rod Bolt Torque, Lb. Ft.	Main Bearing Journal Diameter, Inch	Main Bearing Clearance, Inch	Main Bolt Torque, Lb. Ft.
				Comp.	Oil						
1952–54	377①	.003	1.124	.018	.018	2.374–2.375	.002–.003	90	3.246–3.247	.0025–.0035	145
1952–54	447①	.003	1.124	.018	.018	2.499–2.500	.002–.003	95	3.246–3.247	.0025–.0035	145
1952–54	501①	.003	1.124	.018	.018	2.499–2.500	.002–.003	95	3.246–3.247	.0025–.0035	145
1954	H540②	.002	1.250	.012	.012	2.748–2.749	.001–.0035	60	3.248–3.249	.0015–.004	95
1955–57	390A③	.005	1.250	.013	.013	2.4995–2.5005	.003–.004	75	3.2495–3.2505	.0035–.0045	75
1957–63	490A③	.005	1.250	.013	.013	2.4995–2.5005	.003–.004	80–120	3.2495–3.2505	.0035–.0045	85
1960–63	6-185A	.004	1.0625	.012	.012	2.3093–2.3100	.001–.0032	65–70	2.7485–2.7492	.001–.0035	85–90

① Autocar. ② Le Roi. ③ White. ④ Pistons removed from above.

STARTING MOTOR SPECIFICATIONS

Unit Part No.	Rotation ①	Brush Spring Tension, Oz.	No Load Test			Torque Test		
			Amperes	Volts	R.P.M.	Amperes	Volts	Torque Lb. Ft.
1108605	C	24–28	75	11.25	6000	615	5.85	29
1108607	C	24–28	75	11.25	6000	615	5.85	29
1108840	C	36–40	115	11.60	7000	570	2.30	20
1108863	C	36–40	100	23.00	8000	525	3.00	32
1108872	C	36–40	100	23.00	8000	525	3.00	32
1108956	C	36–40	65	11.30	5500	675	4.00	30
1109510	C	36–40	65	11.40	6000	725	5.00	44
1109173	C	36–40	65	11.40	6000	725	5.00	44
MAY-4139	C	42–53	45	10.00	2900	185	4.00	8
MAY-4102	C	42–53	40	10.00	3900	340	4.00	13.2

① As viewed from drive end: C—Clockwise. CC—Counterclockwise.

DISTRIBUTOR SPECIFICATIONS

Unit Part Number	Rotation ①	Cam Angle, Degrees	Breaker Gap, In.	Condenser Capacity, Mfds.	Breaker Arm Spring Tension, Oz.	Centrifugal Advance Deg. @ R.P.M. of Dist.		Vacuum Advance		
						Advance Starts	Full Advance	Inches of Vacuum to Start Plunger Movement	Inches of Vacuum for Full Plunger Travel	Maximum Vacuum Advance, Dist. Degrees
1110616	CC	21–30	.016	.23–.26	19–23	2 @ 275	17 @ 1325	None	None	None
1111779	CC	31–37	.022	.23–.26	19–23	2 @ 325	16 @ 1500	None	None	None
1111836	CC	31–37	.022	.23–.26	19–23	2 @ 325	16 @ 1500	None	None	None
1112271	C	31–37	.022	.23–.26	19–23	1 @ 325	6 @ 1000	None	None	None
1112315	C	31–37	.022	.23–.26	19–23	1 @ 375	6 @ 1300	None	None	None
1112319	C	31–37	.022	.23–.26	19–23	2 @ 375	9 @ 1300	None	None	None
1AD-4017A	C	39	.020	.23–.26	17–20	1 @ 325	6 @ 850	None	None	None
1AD-4302A	C	39	.020	.23–.26	17–20	1 @ 340	6 @ 970	None	None	None

① C—Clockwise. CC—Counterclockwise; as viewed from top.

WHEEL ALIGNMENT SPECIFICATIONS

Front Axle Model	Caster, Deg.	Camber, Deg.	Toe-In, Inch	Kingpin Inclination, Deg.
FD-900	①	1	1/8	5 1/2
FE-18	①	1	1/8	0
FE-900	①	1	1/8	5 1/2
FG-900	①	1	1/8	8

Front Axle Model	Caster, Deg.	Camber, Deg.	Toe-In, Inch	Kingpin Inclination, Deg.
FU-900	①	1	1/8	0
27462	①	1	1/8	8

①—Caster angle varies with each chassis due to model, springs and suspension, steering gear, etc.

Engine Section

See White Chapter for Service on White Engines

CYLINDER HEAD, REPLACE

Autocar Engines

A new cylinder head gasket should be installed whenever the cylinder head has been removed for any reason. When installing the head, draw the nuts down evenly and in the order shown in Figs. 1 and 2, using the chart that matches the head being worked on. Tighten the nuts gradually, repeating the operation several times and in the proper order. After 500 miles of operation, again check the tension of the nuts and torque them to the values given in the *Tune Up & Valve Specifications* table.

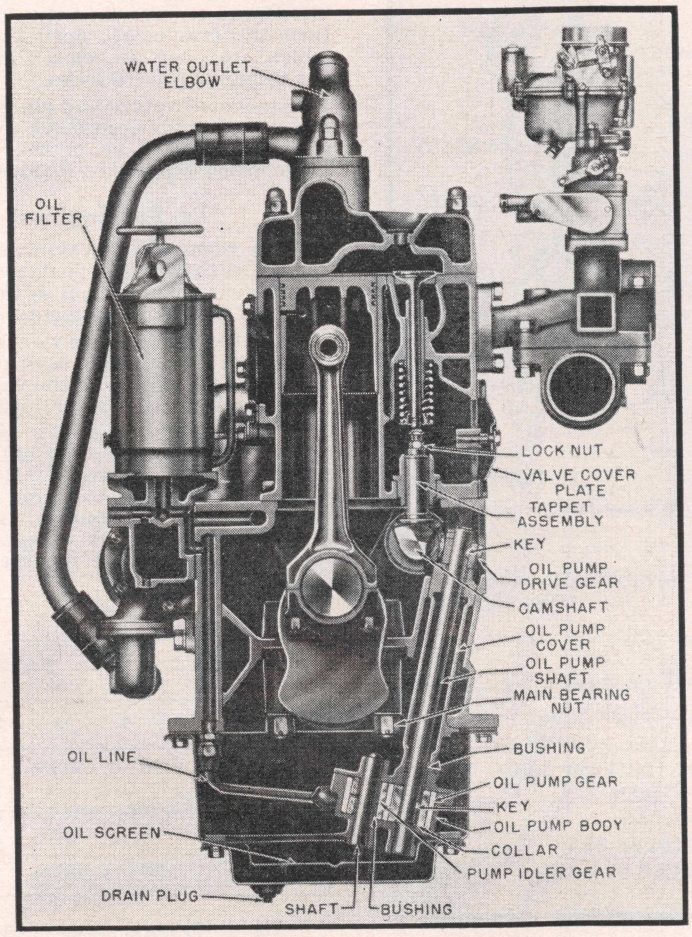

Autocar 377 engine

Le Roi Engine

To remove the head or heads, drain the cooling system and remove manifolds, valve cover and oil line. Remove the rocker shaft assembly and, after removing the nuts from the studs, lift off the head or heads.

To install the heads, first tighten the stud nuts *finger tight.* Replace the intake manifold between the heads and level it so that each side will have equal projections of gaskets above and below the manifold flange.

Install the exhaust manifolds, center them on the studs and tighten the stud nuts and clamp nuts *finger tight.*

Tighten the head nuts to approximately 30 lb. ft. temporarily. Then tighten the manifold nuts approximately 20 lb. ft. temporarily. Finally, tighten both head and manifold nuts to the final torque in the sequence shown in Fig. 3. Final torque is 90 lb. ft. for cylinder heads and 60 lb. ft. for manifolds.

Check the intake manifold alignment by sliding a thin feeler gauge around the flanges. The mating flange contact should be such that the feeler gauge cannot slide under the manifold.

Rotate the engine by hand to see that the push rods do not touch the cylinder head at any time. If this does happen, loosen and realign the head.

ROCKER ARM SERVICE

Le Roi Engines

Sludge and gum formation in the rocker arms and shafts will restrict the normal flow of oil to the rocker arms and valves. Each time the assemblies are removed they should be disassembled and thoroughly cleaned.

After disassembling, clean all gum and sludge formation from the inside and outside of the shafts and rocker arms. Check the fit of the rocker arms on the shafts and the valve end of the rocker arms for excessive wear. If the rocker arm radius is grooved on the valve end, replace the part.

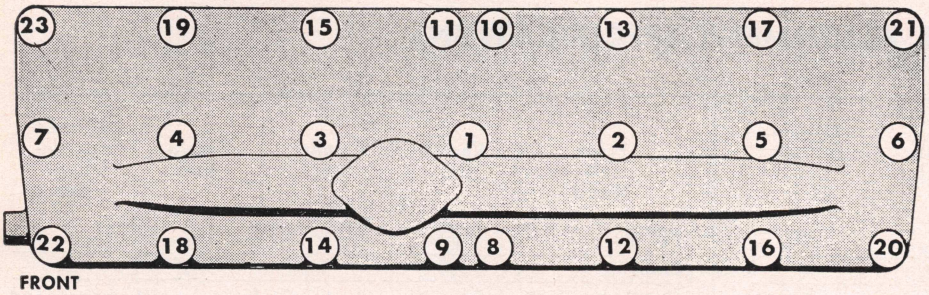

Fig. 1 Cylinder head tightening. Autocar 377 engine

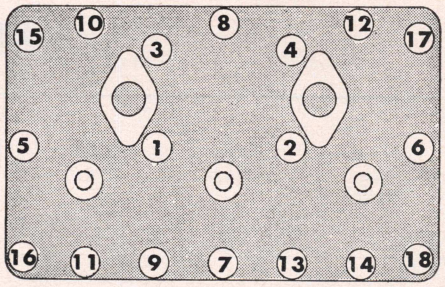

Fig. 2 Cylinder head tightening. Autocar 447 and 501 engines

Check each push rod for a bent or damaged condition. If bent more than .020″ when checked with a dial indicator, replace the push rod. Do not attempt to straighten a bent push rod. If a dial gauge is not available, at least check the rod for straightness by rolling it on a perfectly flat surface plate.

Cement the new rocker arm cover gasket to the cylinder head instead of to the cover. When the gasket is cemented to the cover, it is more easily damaged when removing or installing the cover.

VALVES, ADJUST

All Engines

On Le Roi engines, before adjusting the valves, the engine must be thoroughly warmed up for about 30 minutes to stabilize the expansion of all parts. The valves may then be adjusted with the engine not running.

On Autocar engines, the valves may be adjusted with the engine cold or at shop temperature.

Turn the engine over by hand to bring No. 1 piston up on its compression stroke and to its firing position. Then adjust the valves of this cylinder. Turn the engine over to the next cylinder in the firing order and adjust the valves in this cylinder. Adjust the remaining valves by following the firing order of the engine being serviced. (Fig. 4 shows the cylinder numbering system and firing order of Le Roi engines.)

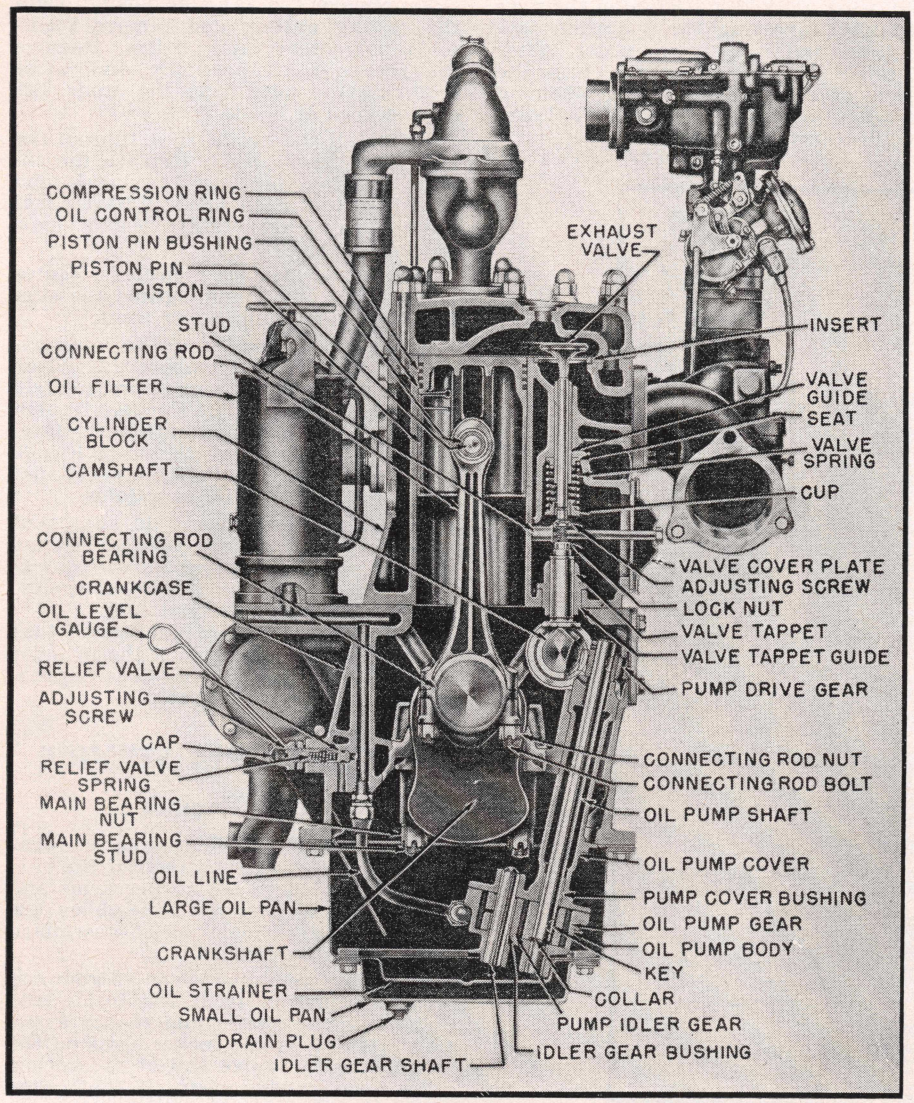

Autocar 447 and 501 engines

VALVES, REMOVE

Autocar Engines

After taking off the cylinder head, remove the valve chamber covers. With a suitable valve spring compressor, raise the springs on those valves which are closed and remove the valve locks. Then turn the crankshaft until those valves which are open are closed and remove the remaining valve locks.

Remove all valves and place them in a board with numbered holes so that they can be identified as to the valve port from which they were removed.

Le Roi Engines

After removing the cylinder head (or heads), withdraw the push rods and tag or otherwise locate them so they may be returned to their original position.

Place the head on the workbench with a block of wood under each combustion chamber in turn to hold the valves closed while removing the valve locks.

With a suitable spring compressor, compress the valve spring until the lock retainer can be removed. Remove the valve lock and valve rotator, spring and washer. After removing all valves and related parts, tag or otherwise locate them so they may be returned to their original position.

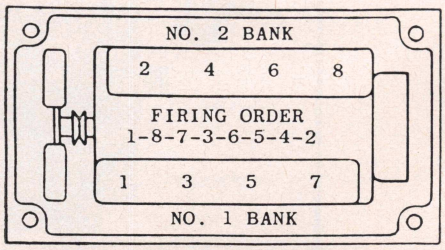

Fig. 4 Cylinder designation plate. Le Roi engine

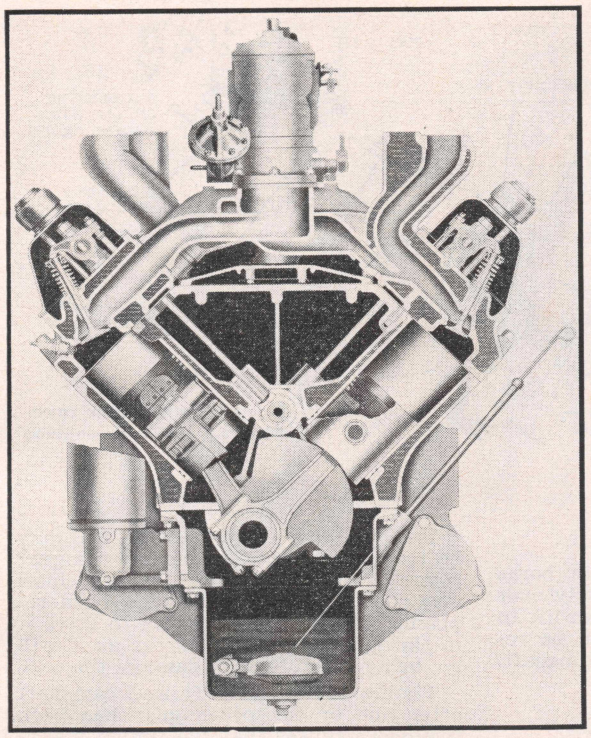

Le Roi H540 engine

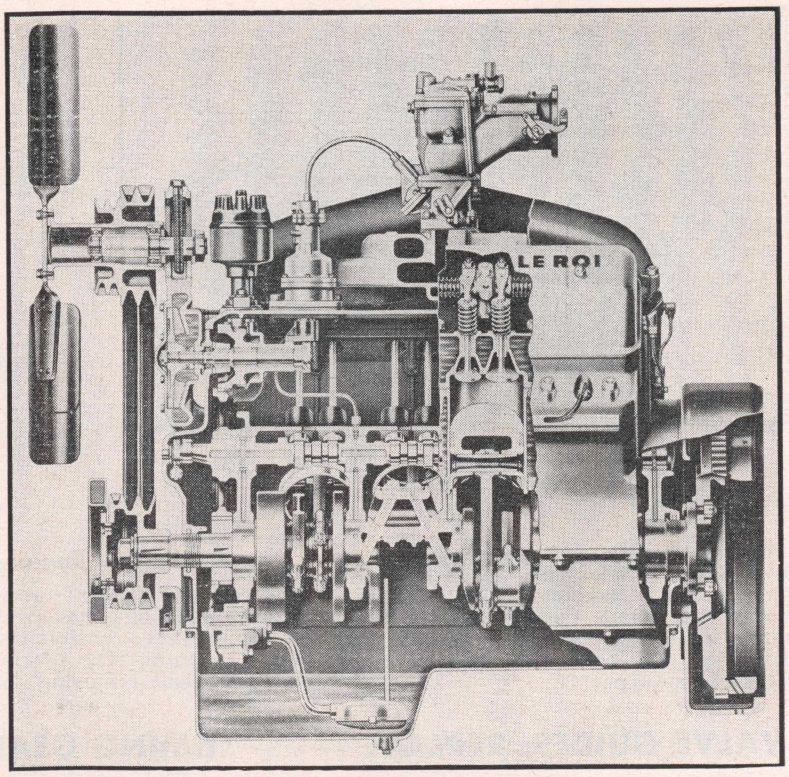

Le Roi H540 engine

VALVES, GRIND

All Engines

In refacing valves, take off only the minimum of metal required to clean up the valve faces. If the outer edge of the valve becomes too thin or sharp due to excessive grinding, the valve must be replaced.

Inspect the valve seats in the block or head for cracks, burns, pitting, ridges or improper angle. During any general engine overhaul it is advisable to reface the valve seats regardless of their condition. If new valve guides are required, they must be installed before refacing the seats if the equipment used has a valve guide pilot.

The valve seat width after refacing should measure not more than $\frac{5}{64}$ in. The width may be checked by placing a scale across the face of the seat.

A simple check can be made to prove the fit of the valve in the valve seat by spreading a thin film of Prussian Blue on the valve face and then inserting the valve into the valve seat. With hand pressure, rotate the valve ¼ turn and then remove it and observe the transfer of Prussian Blue to the valve seat. An uneven transfer of Prussian Blue will indicate an inaccurate valve and valve seat refacing operation.

VALVE SEAT INSERTS

All Engines

Whenever a valve grind job is being done, check the exhaust valve seat inserts. If one is found to be cracked or loose, it should be removed with a puller and the recess on the block or head carefully cleaned before installing the new seat.

To insure the proper press fit, shrink the insert by packing it in dry ice for about an hour before driving it in place.

Oversize inserts are available when required and the recess should be counterbored carefully to accomodate the oversize insert used.

VALVE SPRINGS

All Engines

After taking out the valves, remove the springs and wash them with gasoline or other suitable solvent. Examine the springs for damage or corrosion due to acid etching, which will develop into surface cracks and cause spring failure.

Check the valve spring tension on a suitable test fixture if one is available. If a fixture is not available at least check the free length of each spring by standing it alongside a new spring.

Any spring that does not conform to

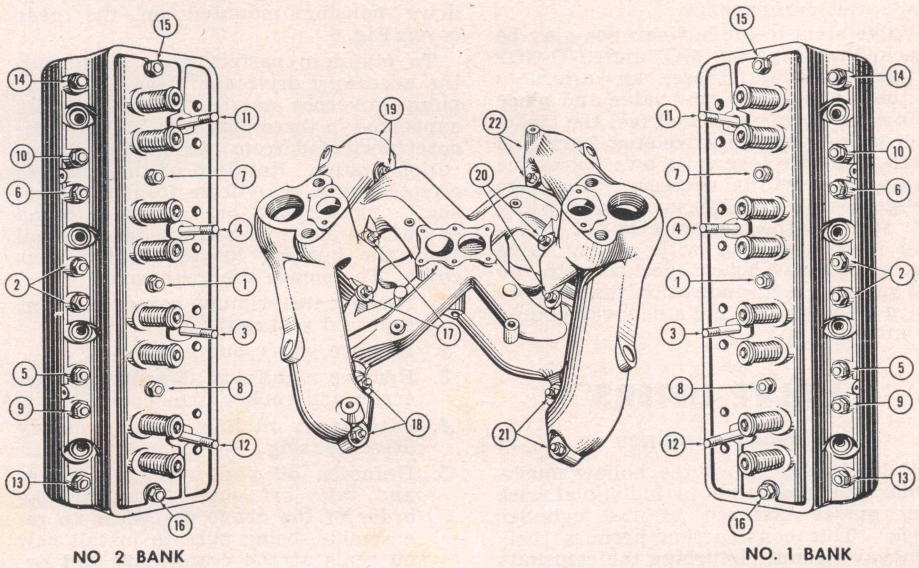

Fig. 3 Cylinder head and manifold tightening. Le Roi engine

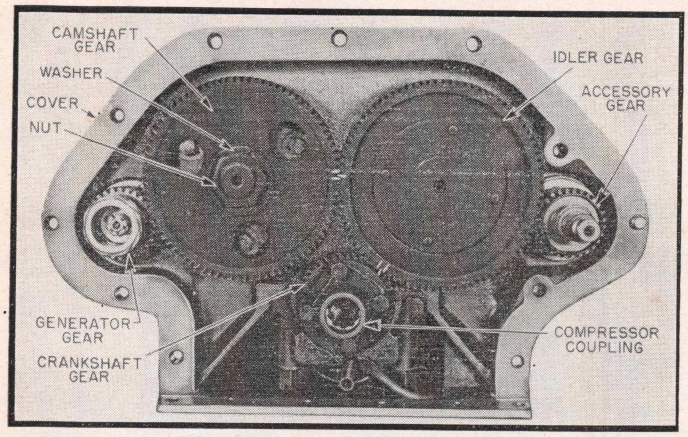

Fig. 5 For correct valve timing, gear marks should be matched as shown. Autocar engines

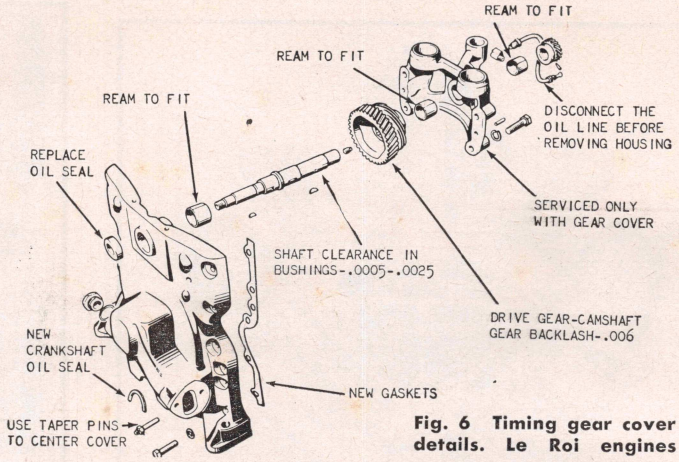

Fig. 6 Timing gear cover details. Le Roi engines

the pressure specifications (see *Tune Up & Valve Specifications* table) within 10% should be replaced. Likewise, any spring that stands shorter than the new spring used for comparison should be discarded. Of course, cocked springs should be scrapped.

VALVE GUIDES, REPLACE

All Engines

Clean the valve guides with a wire guide brush and clean the valves with a wire wheel brush, making sure that all carbon is removed from the top and bottom of the heads as well as the gum which might have accumulated on the stems.

Check the clearance between valve stems and guides carefully. Excessive clearance between valve stems and guides will cause improper seating and burned valves. When there is too much clearance between intake valve stems and guides, there is a tendency to draw oil vapor through the guide on the suction stroke, causing excessive oil consumption, fouled spark plugs and poor low speed performance.

Valve stem-to-guide clearance may be checked with special "GO" and "NO-GO" gauges. Lacking these, an alternate method is to take a new valve and place it in each valve guide and feel the clearance by moving the valve stem back and forth. If this check shows excessive clearance, it will be necessary to replace the guides that are worn as indicated by this test. If the clearance is not excessive when checking with a new valve but is excessive when checked with the old valve, it is an indication that the old valve stem is worn and a new valve must be installed.

VALVE LIFTERS

Autocar Engines

Valve lifters are of the hollow mushroom type operating in individual cast iron guides clamped to the cylinder block. This construction permits their removal without disturbing the camshaft or valve mechanism.

Le Roi Engines

Barrel type lifters operate in bores for each bank of cylinders directly over the camshaft to transmit the cam lift to the valve train. The lifters can be replaced without removing the camshaft.

TIMING GEARS

Autocar Engines

The proper timing of the valves depends on the proper meshing of the camshaft gear with the crankshaft and idler gears. These gears are clearly marked as shown in Fig. 5. The tooth on the crankshaft gear with the single punch mark must mesh between the two marked teeth on the idler gear. Also the single tooth on the idler gear that is punch marked must mesh between the two marked teeth on the camshaft gear.

Le Roi Engines

The gear cover houses the crankshaft and camshaft gears, tachometer drive, accessory drive shaft, and the accessory drive housing mounted on the gear cover, Fig. 6.

To maintain perfect gear alignment, the accessory drive shaft for the water pump, governor and distributor is rigidly supported in three bearings, and is pressure lubricated from the engine's lubrication system. Rotation of this shaft is effected by a gear drive from the camshaft. An oil seal on the water pump end of the shaft prevents leakage of oil from the bushing located in the gear cover. To remove the gear cover:

1. Remove water pump cover, impeller, seal and seal seat.
2. Remove water pump body.
3. Remove manifolds, distributor, governor and rocker arm cover.
4. Disconnect oil line from accessory drive housing.
5. Unfasten oil pan from gear cover and take off cover. Reverse the order of the above procedure to reassemble, being sure to install new oil seals at the crankshaft and accessory drive shaft.

The accessory drive shaft oil seal may be removed without taking off the gear cover by cutting it with a sharp chisel and hooking it straight out. When replacing this seal use a sleeve to drive it in the gear cover hole as far as it will go, being careful not to damage the seal.

Timing the crankshaft and camshaft after one or the other gear has been removed requires that the timing marks on both gears be aligned as shown in Fig. 7.

Backlash originally provided for these gears is .006".

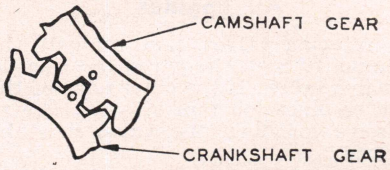

Fig. 7 Valve timing marks. Le Roi engine

CAMSHAFT & BEARINGS

Autocar Engines

To assure proper camshaft fit, camshaft bearings should be reamed *after* the cylinder block is bolted to the crankcase. Be sure the oil holes in the bearings are in line with the corresponding holes in the crankcase to assure adequate lubrication.

Camshaft end play is controlled by a fibre washer at the front end of the shaft. At long intervals, or when the engine has been disassembled for repairs, the end play should be checked and if in excess of about .006", install a new washer.

Le Roi Engines

These engines are equipped with shell type bearings which require reaming after installation. When new bearings are installed, be sure the oil holes in the bearings are aligned with the oil feed holes in the block to assure adequate lubrication.

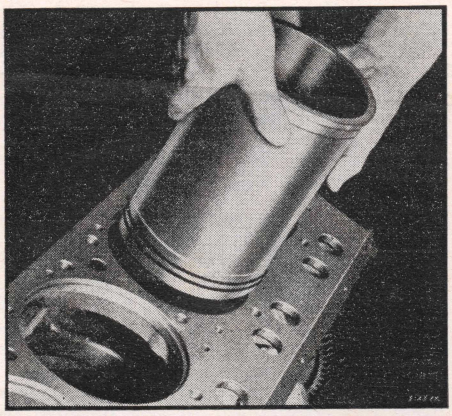

Fig. 8 Installing cylinder sleeve in Le Roi engine. Packing rings must be well soaped to prevent their pulling out the grooves

PISTONS & RODS, REMOVE

All Engines

After removing the cylinder head and oil pan, examine the cylinder bores above the ring travel area. If the bores are worn so that a shoulder or ridge exists at this point, remove the ridge with a ridge reamer to avoid damaging rings or cracking ring lands of pistons during removal.

Remove the connecting rod caps and push the pistons and rods out of the cylinders, using care to prevent rod bolts from nicking crankshaft journals.

Make sure the rods and pistons are properly numbered so they can be reinstalled in the original locations. It is advisable to install caps on rods to avoid mixing parts.

PISTON & ROD, ASSEMBLE

Autocar Engines

Assemble the piston to the connecting rod so that when the assembly is installed in the block the T-slot side of the piston faces away from the camshaft side of the engine.

Le Roi Engines

Assemble the pistons to the connecting rods so that when the assembly is installed in the block the T-slot side of all pistons face the camshaft.

CYLINDER SLEEVES, REPLACE

Le Roi Engines

Iron alloy cylinder sleeves or liners are used to afford a replaceable wearing surface and form the inner water jacket surface. Neoprene rings in the liner grooves seal the water jackets at the bottom of the liner, while at the top end the cylinder head gasket provides the seal.

Wear in the liner to a point where piston-to-cylinder liner clearances become excessive may be suspected when blow-by, low compression pressures, smoky exhaust and high oil consumption indicate leakage around the piston.

Soak the carbon and oil deposits with solvent or gasoline and thoroughly clean the liner bore. Slight scratches and the ring travel ridge may be removed by scraping. The use of emery cloth is not recommended.

To determine the cylinder liner wear, traverse the bore with a dial indicating micrometer and note the average reading.

The liner may be removed by driving it up from the bottom with a mallet and a hard wood block, or with a liner puller. To seal the crankcase properly, the bore and upper seating surfaces must be absolutely clean.

Before inserting a liner, install the two packing rings and soap them liberally to prevent their pulling out of the grooves, Fig. 8. Guide the liner into the bore and drive it in place carefully so as to avoid damaging the sealing rings.

Always test the cooling system for leaks into the crankcase after replacing a cylinder liner.

PISTONS, REPLACE

All Engines

When fitting a piston in the cylinder block, wipe the cylinder bore clean with a cloth and insert the piston upside down with a feeler gauge of the proper width and thickness (given below) between the cylinder wall and thrust side of the piston. With the piston at room temperature, it should require the lbs. pull (given below) to remove the feeler with the piston held stationary. The lb. tension is measured with a spring scale attached to the feeler.

The fit of the piston should be checked at different points in the cylinder bore. And after fitting, each piston should be stamped with a number or otherwise marked with the cylinder number to which it belongs.

Engine	Feeler Gauge Thickness	Width	Lb. Pull
Autocar	.003″	½″	4-5
Le Roi	.002″	½″	10

Whenever a single piston is replaced in service, the new piston should match the weight of the old piston within ¼ oz. in order to retain balance in the engine.

PISTON RINGS, REPLACE

All Engines

When new piston rings are to be installed without reboring cylinders, the glazed cylinder walls should be slightly dulled, but without increasing the bore diameter. This is done with a "Glazebuster" or with a hone equipped with the finest grade of stones.

New piston rings must be checked for clearance in piston grooves and for gap in cylinder bores. Cylinder bores and piston grooves must be clean, dry and free of carbon and burrs.

Check the clearance of each ring in its piston groove by installing the ring and then inserting feeler gauges *under* the ring. Any wear that occurs in the piston groove forms a step or ridge at the inner portion of the lower land. If gauges are inserted above the ring, the ring may rest on the step instead of on the worn portion of the lower land, and a false measurement of clearance will result.

If the piston grooves have worn to the extent that relatively high steps or ridges exist on the lower lands, the piston should be replaced because the steps will interfere with the operation of the new rings and the ring clearances will be excessive. Piston rings are not furnished in oversize widths to compensate for ring groove wear.

To check the end gap of rings, place the ring in the cylinder in which it will be used. Square it in the bore by tapping with either end of the piston, then measure the gap with feeler gauges. If necessary to increase the gap, file the ends of rings carefully with a smooth file.

PISTON PINS, REPLACE

All Engines

Piston pins are of the full floating type, being free to rotate in the piston bosses as well as in the connecting rod bushings at operating temperatures. Snap rings, located in the grooves in the piston bosses, prevent the pins from contacting the cylinder walls.

To fit a pin, heat the piston in a pail of boiling water until heated thoroughly. Then remove the piston and quickly insert the pin. A good fit is one which requires a slight push of the thumb to insert the pin.

ROD BEARINGS, REPLACE

All Engines

Connecting rods are fitted with precision type bearings, held in position by locking lugs which fit into grooves cut in the rods and in the caps.

Bearing clearance may be checked with Plastigage, which is available at any auto parts jobber. Instructions for its use are furnished with the package.

Lacking Plastigage, use a piece of tough paper or shim stock ¾″ square which measures about .0005″ under the maximum allowable bearing clearance. Oil the shim on both sides and lay it in the center of the bearing. Install the assembled bearing and cap and tighten the cap nuts to the torque given in the table.

The clearance is correct if the rod can be moved endwise when tapped lightly with a hammer. If the rod can be moved endwise by hand, clearance is too great. On the other hand, if the rod will not move when tapped lightly with a hammer, not enough clearance is present.

MAIN BEARINGS, REPLACE

Autocar Engines

On 377 engines before Eng. No. 25-6878, the main bearings are provided with a single laminated shim in each bearing for adjustment. After this Eng. No., no shims are used.

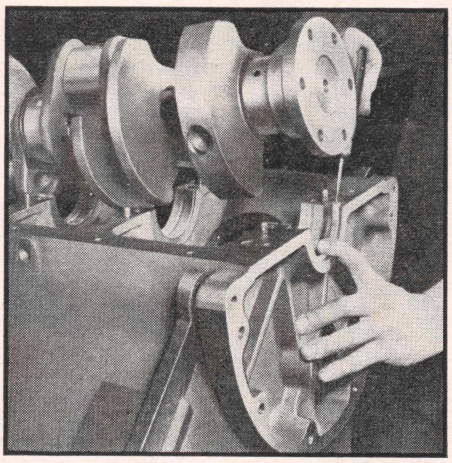

Fig. 9 Inserting crankshaft oil seal. Le Roi engine

On 447 and 501 engines the bearing shells are located by means of dowel pins in the bearing caps. No shims are provided for adjustment. On 377 engines, the bearings are held in place by locking lugs which fit into grooves milled in the crankcase and in the bearing caps.

Main bearings can be replaced without removing the crankshaft.

Le Roi Engines

Insert type bearings are used in all these engines and can be replaced without removing the crankshaft.

Fitting Main Bearings

On all engines, main bearings should be replaced in sets and under no circumstances should they be filed or otherwise altered in an attempt to affect an adjustment.

Plastigage may be used to check the fit of bearings and instructions for its use are furnished with the package.

CRANKSHAFT END PLAY, ADJUST

All Engines

Crankshaft end play is controlled by thrust washers on each side of the center main bearing on Autocar engines, by flanges on the front main bearing on Continental engines, and by flanges on the center main bearing on Le Roi engines.

Through normal wear, end play will seldom become excessive but whenever new bearings are fitted, check the end play which should be between .003″ and .007″.

Wear of the thrust bearing, usually caused by undue thrust loads, may be detected by knocks in the vicinity of the thrust bearing. To check this condition, remove the oil pan and insert feeler gauges between the bearing flange (or thrust washer) and crankshaft. If the end play is excessive, install a new thrust bearing or on Autocar engines, new thrust washers.

CRANKSHAFT OIL SEAL, REPLACE

Autocar Engines

Oil sealing at the rear main bearing is controlled by an oil slinger, integral with the crankshaft, running in a groove leading into the oil pan.

Le Roi Engines

Sealing around the crankshaft at both ends is provided by split felt rings held in place in recesses in both the crankcase and oil pan. Return oil grooves are cut into the crankshaft.

Insert the oil seal into the grooves provided in the crankcase, Fig. 9, making certain no part of the oil seal projects above or below the groove edge. Do not trim the edges of the oil seals.

Coat the seals with graphite and oil after they have been installed. Then tighten the oil pan to crankcase so that the ends of each felt half meet to form the proper seal.

OIL PUMP REPAIRS

Autocar Engines

The oil pump on these engines are of the positive gear type which can be removed after dropping the oil pan.

These pumps can easily be disassembled by taking off the upper drive gear and bottom cover, after which the component parts can readily be removed.

Le Roi Engines

The gear type oil pump, Fig. 10, is mounted on the front main bearing cap and is driven by the crankshaft gear. A pressure relief valve, built into the pump, continually by-passes the excess oil pumped over that required to lubricate the engine to the pump suction side and maintains correct oil pressure.

The oil pressure relief valve depends upon free movement of the plunger to operate correctly. If erratic oil pressure is traced to the relief valve, remove the oil discharge tube and tube connection. Pull out the spring and plunger and clean out the bore. Do not stretch or shim the spring to correct valve operation.

During any general engine overhaul, the oil pump should be disassembled, cleaned and inspected. Severe sludging may require an occasional disassembly to keep the pump passages clean.

Low oil pressure traced to the oil pump may be due to worn gears or restricted pump passages or excessive clearances.

WATER PUMP REPAIRS

Autocar 377 Engine

Disassemble—Remove the pump from the engine and take off the cover, Fig. 11. Using a puller, remove impeller with seal from shaft. Remove snap ring and withdraw seal from impeller hub. Remove lock ring and press shaft and bearing from body.

Inspection—If the sealing face of the pump body is pitted or grooved, this surface should be refaced or a new body installed. If the impeller is corroded it should be replaced, using a new impeller

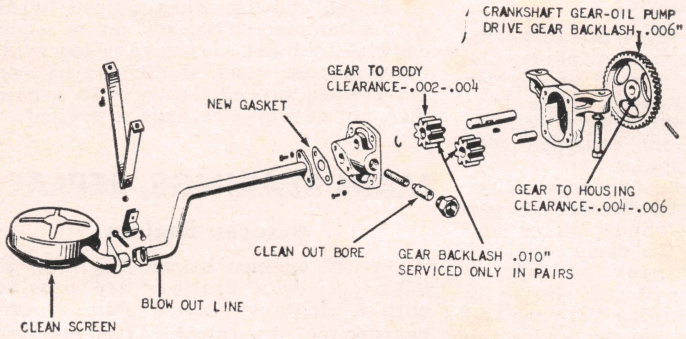

Fig. 10 Oil pump service details. Le Roi engine

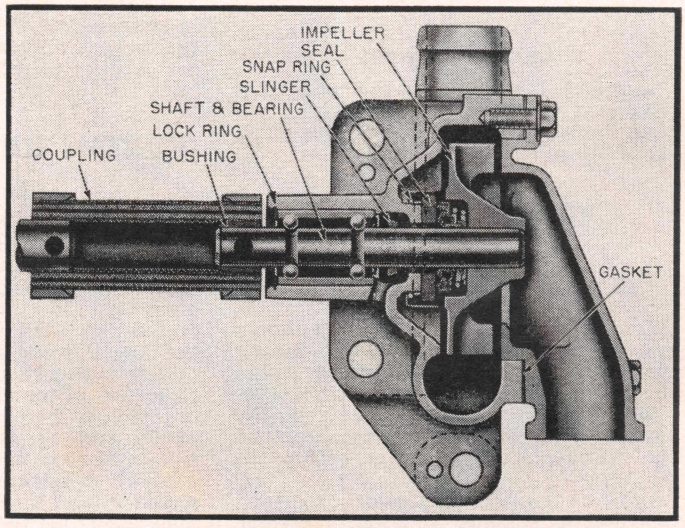

Fig. 11 Water pump. Autocar 377 engine

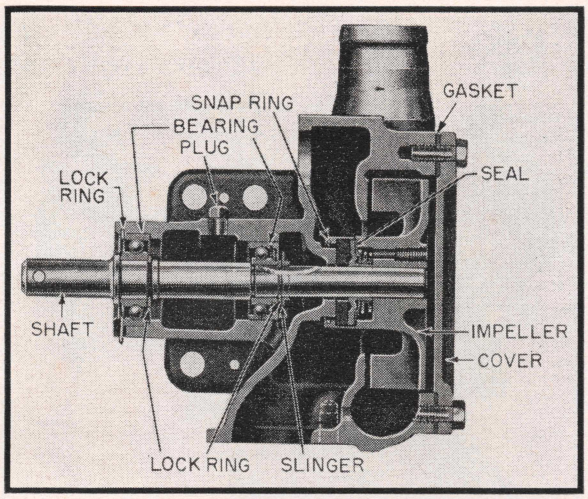

Fig. 12 Water pump. Autocar 447 and 501 engines

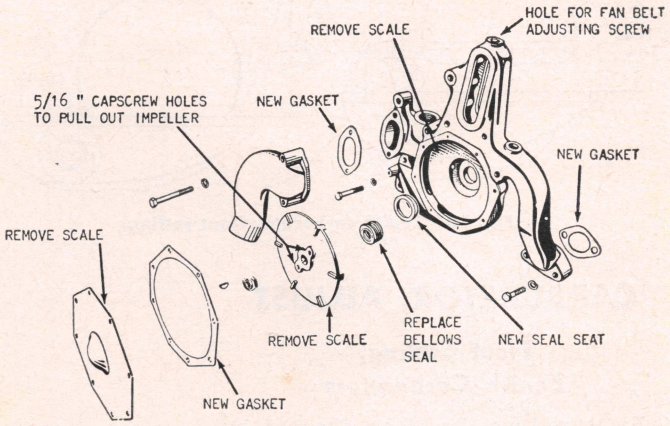

Fig. 14 Water pump service details. Le Roi engine

and seal assembly. A new seal should always be installed whenever the pump is disassembled. If the pump shaft bearings are noisy, a new shaft and bearing assembly should be installed.

Assemble—Press the bearing and shaft into the pump housing and lock in place with the lock ring. Apply a thin coat of light oil to the pump shaft and press the impeller and seal on the shaft until the face of the impeller is just flush with the end of the shaft.

Complete the assembly and install on the engine, making sure the pump coupling bushing is in place.

Autocar 447 & 501 Engines

Disassemble—Referring to Fig. 12, take off the cover and remove the impeller and seal from the pump shaft, using conventional puller in holes provided. Remove and discard seal from impeller hub. Remove lock ring from body and press out shaft and bearings. Remove lock rings and press bearings from shaft.

Inspection—If either bearing is noisy, replace with new part. Inspect face of body against which sealing washer turns. Surface should be smooth and free from scores. Reface if necessary. Discard impeller if found to be corroded.

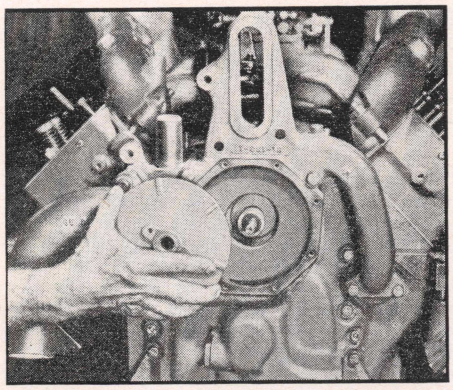

Fig. 13 Location of water pump seal and seal parts. Le Roi engine

Assemble—Press front bearing against shoulder on pump shaft and secure with lock ring. Press rear bearing against shoulder on shaft and secure with lock ring. Press slinger on shaft against lock ring. Assemble shaft with bearings in body and secure with lock ring. Install new seal in impeller hub and lock seal with lock ring. Guide impeller and seal over end of shaft and press impeller on shaft until flush with end of shaft. Replace pump cover with new gasket.

Remove plug and fill housing with wheel bearing grease until it starts to come out of the small vent hole. Replace plug.

Assemble pump to engine, making sure dowel pins are in place. Replace drive coupling and elbows.

Le Roi Engines

The water pump circulates water from a common suction connection into each bank of the engine through individual discharge connections.

The pump is lubricated under pressure from the main lubricating oil system of the engine. The pump impeller is mounted on the front end of the accessory drive shaft.

Leakage of water from between the water pump and gear cover may be due to a defective sealing washer, Fig. 13.

To remove the water pump seal, loosen and remove the fan belts and water pump cover. Insert cap screws in the impeller, Fig. 14, and pull it off the pump shaft. It may be necessary to remove rust and scale from the holes. Slide the combination bellows and carbon seal washer off of the shaft. In all cases it is advisable to replace this seal and the seal seat, if necessary, whenever disassembling the pump because of its low cost and the likelihood of its being damaged during removal.

While the cover and impeller are removed, check the gear cover and accessory drive housing bushing clearance by jiggling the shaft. Any noticeable play in the shaft indicates the need for replacing the bushings.

If rust and scale deposits have accumulated in the pump body, remove them and flush entire cooling system.

IGNITION TIMING

If a timing light is to be used to set ignition timing, disconnect the vacuum advance pipe to the carburetor and place a piece of tape over open end of pipe. *This is important as carburetor trouble can affect timing adjustments.*

Lacking a power timing light, an accurate method of setting ignition timing with the engine stopped is with the aid of a jumper light. Be sure to use a light bulb that corresponds with the system voltage of the vehicle.

1. Remove distributor cap and rotor and see that the breaker gap is set according to specifications.
2. Rotate engine until No. 1 cylinder is at the ignition timing point as indicated by the timing pointer and timing mark being lined up with each other.
3. Connect the jumper light between distributor ignition terminal and ground.
4. Turn on ignition switch.
5. Loosen distributor and turn it in the direction of normal rotation until the points just close (light out). Then slowly turn distributor in the opposite direction just to the exact point that the light goes on. Tighten distributor in this position.

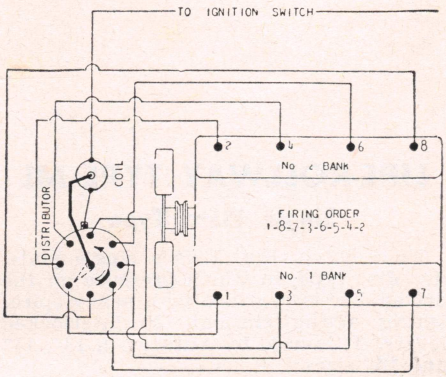

Fig. 15 Ignition wiring diagram. Le Roi engine

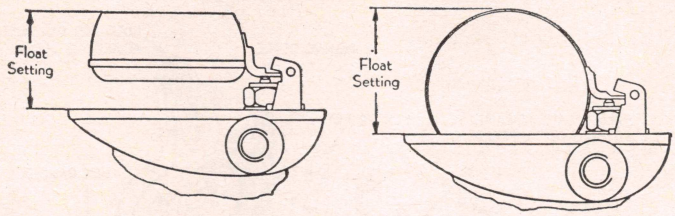

Fig. 16 Zenith carburetor float settings

CARBURETOR, ADJUST

Float Setting, Zenith Carburetors

Float setting should be checked by holding the cover assembly upside down. With the weight of the float holding the needle valve seated, the distance from the far side of the float to the housing should be as given below. See Fig. 16 for type of float used.

Carb. Model	Setting
63AW12	$1\frac{19}{32}''$
63AW14	$2\frac{1}{64}''$

Float Setting, Holley Carburetors

When checking the fuel level in an open vessel, under 4 lbs. pressure on the 885-JJSG carburetor the fuel level should be $\frac{19}{32}''$. Under $4\frac{1}{2}$ lbs. pressure on the 885-FFG carburetor the fuel level should be $\frac{1}{2}''$. Measurement is taken from the float chamber cover with gasket in place to the level of the fuel in the bowl.

The float level can be set accurately by gauging the distance between the bottom of the floats and the chamber cover surface. When setting the float level, it is important that both the "Open" and "Closed" position of the floats be checked, Fig. 17.

To gauge the "Closed" position of the floats, hold the float chamber cover upside down. Then measure the distance from the float chamber gasket to what would normally be the bottom side of the free end of the floats. The distance should be $1\frac{5}{16}''$ on the 885-JJSG unit and $\frac{5}{32}''$ on the 885-FFG carburetor. Measurement is taken with the fuel [illegible] the 885-FFG carburetor is when the valve in the closed position and the float chamber cover gasket in place. To correct the float setting for this position, the float lever arms should be bent up or down to bring the floats within the established limits and thus correct the fuel level for best operation. Pushing the floats up or toward the float cover, raises the fuel level, and down or away from the cover lowers the level.

The "Open" position is gauged by raising the floats up until the float stop arm comes to rest against the inlet needle housing. Then measure the float setting in the same manner as for the "Closed" position. The distance should measure $1\frac{15}{16}''$ on the 885-JJSG unit with the gasket in place and the float in the position illustrated in Fig. 20. Corrections for this setting can be made by bending the stop arm on the float lever.

The "Open" position of the float on the 885-FFG carburetor is when the float rests on the bottom of the bowl.

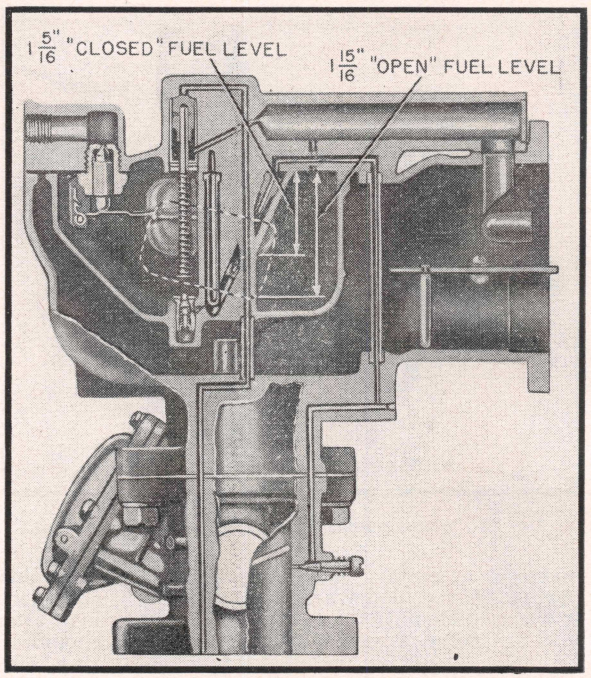

Fig. 17 Float setting. Holley 885-JJSG carburetor

Idle Mixture Setting

The idle needle valve setting from the closed position is from $\frac{3}{4}$ to $1\frac{1}{4}$ turns open on Holley carburetors and 1 turn on Zenith carburetors. Care should be taken not to jam the needles against the seat tight enough to groove the points. If this occurs, the needles will have to be replaced before a satisfactory adjustment can be made.

When the engine has been warmed up, turn one idle needle in until the engine starts to slow down, then turn it out until it again slows down. A point midway between these two will be very close to the correct idle mixture. Repeat this procedure for the other needle (if used). When this is done, cross check by repeating both of the above procedures. The idle speed should be reset, if necessary, between the above operations.

Clutch Section

LIPE-ROLLWAY TYPE ML

Single Plate Type

This clutch, Fig. 1, is a single plate, dry disc type, in which pressure on the driven disc is provided by a heavy spiral spring acting through 20 interlocked levers. It is used by Autocar in 13", 14" and 15" sizes.

When the clutch pedal is depressed, the release sleeve moves toward the flywheel and acting through the fulcrum ring and the clutch pressure levers, relieves the pressure on the clutch pressure plate. The four retractor springs pull the pressure plate away from the flywheel so that there is no longer any contact between the pressure plate and the clutch disc facing. This action disengages the clutch, permitting the flywheel to revolve while the clutch shaft remains stationary.

When the clutch pedal is released, the pressure of the spring is transmitted through the ball-mounted pressure levers to the clutch pressure plate, moving it toward the flywheel and compressing the clutch disc facing, thus engaging the clutch. Since the pressure plate moves in a parallel plane to the flywheel face, every square inch of friction surface of the disc comes in contact with the flywheel at exactly the same instant, insuring smooth engagement.

Adjustment

The original setting of the clutch pro-

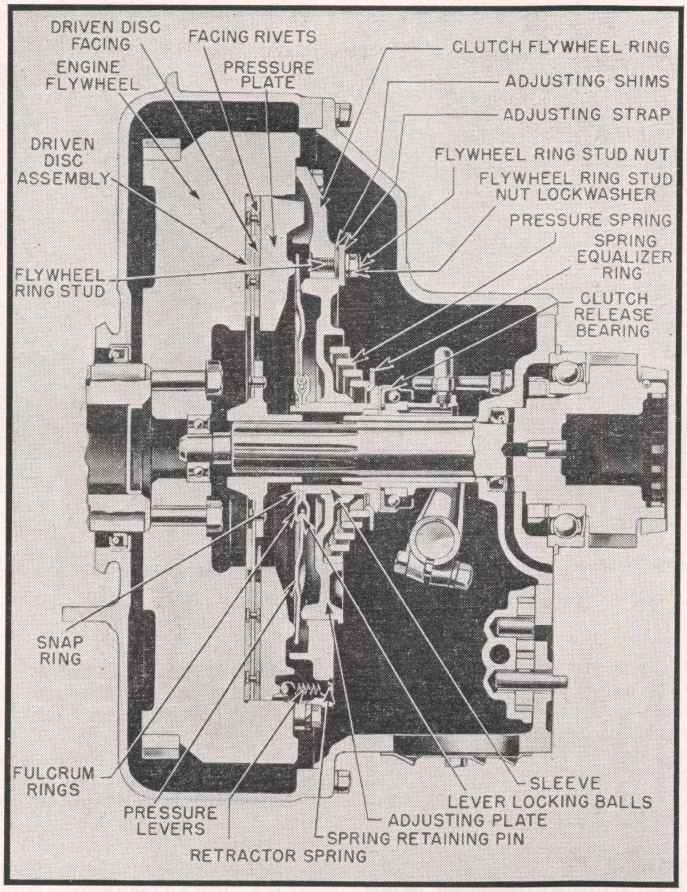

Fig. 1 Lipe-Rollway Type ML multiple lever clutch

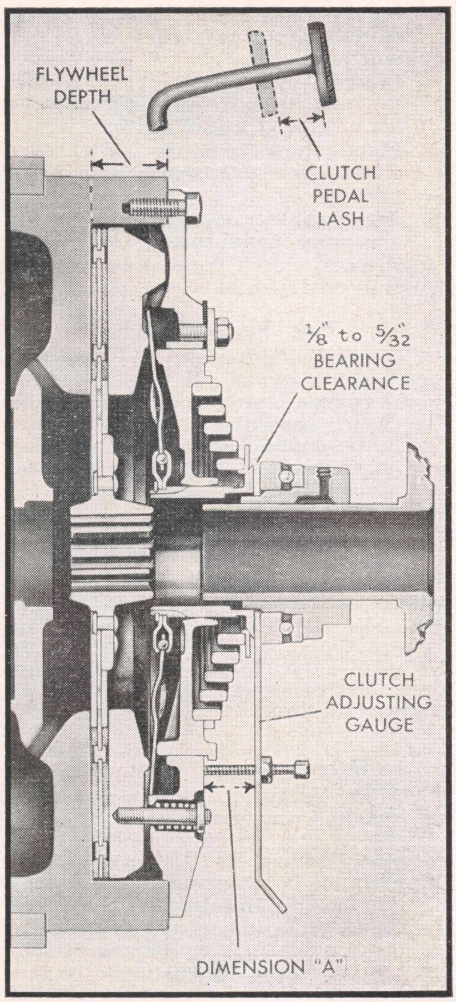

Fig. 2 Adjusting points on Lipe-Rollway Type ML clutches

vides for 1½" free movement of the clutch pedal. As the facings wear, the clutch sleeve moves toward the clutch release bearing, reducing the clearance and automatically cutting down on the free travel of the clutch pedal. When this free travel drops to about ½", the clutch should be readjusted.

Never wait for a clutch to slip before adjusting it. If the facings once become burned, they disintegrate rapidly, and a new clutch disc assembly may be required.

When reduced pedal free travel indicates wear in the clutch, the distance between the clutch sleeve and the rear face of the flywheel ring, as indicated by dimension "A" in Fig. 2 should be checked. When the clutch is properly adjusted, this measurement should be as follows:

Autocar Part No.	Dimension "A"
3DA030	1 to $1\frac{1}{16}$"
3DA030A	$1\frac{1}{16}$ to 1⅛"
3NA030	$1\frac{1}{16}$ to 1⅛"
3NY030	1⅛ to $1\frac{3}{16}$"
3NY030A	$1\frac{5}{16}$ to 1⅜"
All 15" clutches	$1\frac{3}{16}$ to 1¼"

Do not adjust the pedal or linkage to correct free pedal movement. To make the adjustment, proceed as follows:

1. Block pedal in depressed position.
2. Back off the four flywheel ring stud nuts five full turns each.
3. Remove block from clutch pedal and engage clutch.
4. Remove one shim from under each adjusting strap, Fig. 3, using a pair of sharp nose pliers. *Make sure the same number of shims is removed from under each strap, and that no broken portion of a shim is left under the clamp.*
5. Block the pedal in the depressed position again and tighten the four flywheel ring stud nuts. Remove pedal block.
6. Using the gauge, Fig. 2, or a straight edge, check dimension "A".
7. After proper adjustment has been made, check the distance "B", Figs. 2 and 4, from the release bearing to the clutch sleeve. If this dimension is less than ⅛" or more than $\frac{5}{32}$", it will be necessary to adjust the pedal linkage to correct it.

Driven Disc, Replace

1. After removing the transmission, unfasten and remove the clutch from the flywheel.
2. Remove the four flywheel ring stud nuts and the adjusting straps one at a time, and place a total of 6 shims under each strap (7 per stud on clutch No. 3NA030).
3. Examine flywheel, making sure friction face is clean, smooth and dry.
4. Check release bearing and pilot bearing to make sure they are in good condition. Both these bearings are factory sealed and require no further lubrication.
5. Install a new driven disc assembly and bolt the clutch to the flywheel, using a spare splined shaft to align the disc. Screw in each bolt until it just contacts the cover plate, then gradually tighten alternate bolts until the clutch is drawn up evenly against the flywheel. Tighten the remaining bolts that secure the clutch to the flywheel.
6. After the clutch is installed, check for proper release. Adjust clutch and pedal linkage as outlined previously.

Pressure Plate, Replace

A pressure plate "dished" in excess of .015" or badly scored should be replaced with a new part. After removing the transmission and the clutch from the flywheel, proceed as follows:

1. Place clutch on an arbor press with pressure plate down and compress the spring as far as possible.
2. Remove four retractor springs after first removing the pins.

3. Slowly release the press, allowing clutch spring to return to normal position.
4. Holding clutch assembly together by hand, turn it over and carefully lift off the pressure plate.
5. Install new pressure plate, turn clutch over and compress in arbor press.
6. See that retractor springs are in place and install pins.
7. Remove clutch from press and install on flywheel.

Two Plate Clutch

This clutch is a two plate, dry disc type with the two driven plates mounted on the splined clutch shaft. The driven disc, which separates these two plates, Fig. 5, is mounted within the flywheel on four drive pins. The clutch operates in substantially the same manner as the single plate type.

Clutch Adjustment

This clutch is adjusted in the same manner as the single plate type. Dimension "A" should be 1⅛" to $1\frac{3}{16}$" on Autocar Clutch No. 3E030A, and 1¼" to $1\frac{5}{16}$" on Clutch No. 3E030B. All other items of adjustment are the same as single plate units.

Driven Discs, Replace

1. After removing the transmission, unfasten the clutch from the flywheel and remove clutch cover plate, driving disc and driven discs.
2. Examine flywheel, making sure friction face is smooth, clean and dry. Check pilot and release bearings to make sure they are in good condition. Both these bearings are factory sealed and require no further lubrication.
3. Inspect driving disc drive pins in the flywheel. Make certain that shanks of pins are press fitted into flywheel rim, and that heads are squarely aligned with the friction face of flywheel. If drive pins are found to be loose, a .015" oversize pin should be installed. This will require reaming the holes in the flywheel rim to .5145"-.5155". When heads of drive pins are squarely aligned, lock in position with set screw. If set screws are not provided, check to see that the four capscrew holes adjacent to the drive pin holes are tapped all the way through. If not deep tapped, drill with $\frac{5}{16}$" tap drill and a ⅜"-16 tap and insert ⅜"-16x⅜" Allen head set screw.
4. Place driving disc over drive pins and check clearance between heads and slots in driving disc. A side lash of .007" to .011" is required.
5. Using a spare splined clutch shaft, install the driven discs and driving disc as follows:
6. Install driven disc marked "flywheel side" next to flywheel with marked side next to flywheel face.
7. Install driving disc, making certain its rotation is in the direction of the arrows appearing on one side near the bore.
8. Install the driven disc marked "pressure plate side" with the marked side next to the pressure plate.
9. Bolt the cover plate to the flywheel, gradually tightening opposite bolts until assembly is drawn tight to flywheel.
10. Adjust clutch and pedal linkage.
11. Remove dummy clutch shaft and install transmission.

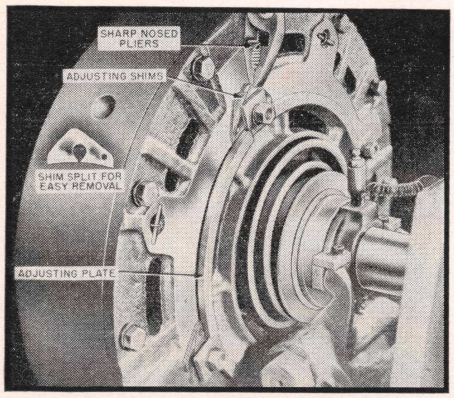

Fig. 3 Removing shims to establish dimension "A". Lipe-Rollway Type ML clutches

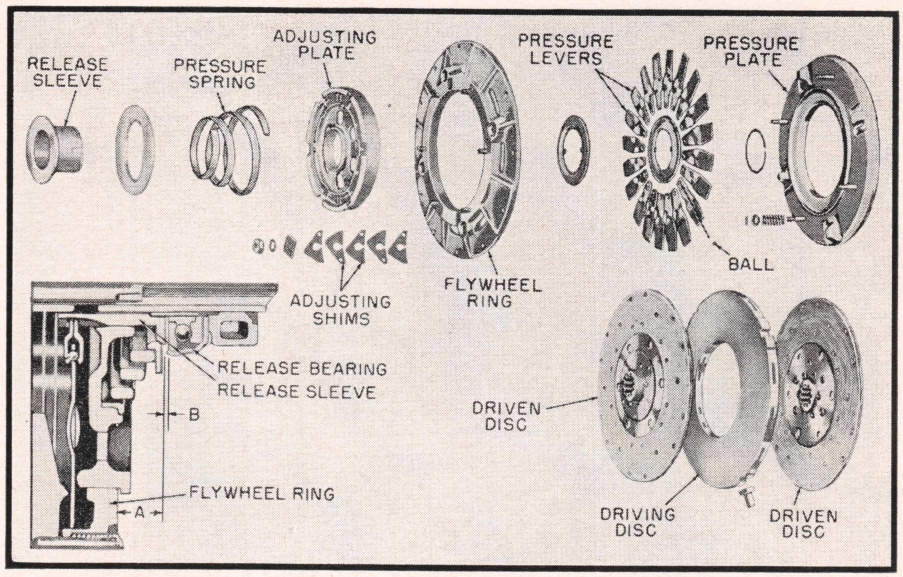

Fig. 5 Layout of Lipe-Rollway Type ML two plate clutch parts

Pressure Plate, Replace

A pressure plate "dished" in excess of .015", badly scored or having a fulcrum edge in excess of $\frac{1}{16}$" in width, Fig. 6, should be replaced with new part. After removing transmission and cover plate from flywheel, proceed as follows:

1. Place cover plate in arbor press with pressure plate down and compress spring as far as possible.
2. After removing pins and washers remove springs from studs.
3. Slowly release arbor press, allowing clutch spring to return to normal position.
4. Holding cover plate together by hand, turn it over carefully and lift off pressure plate.
5. Install new pressure plate, turn cover plate over and compress in arbor press.
6. With retractor springs over studs, install washers and pins. Retainer washers should have the cupped side up so as to lock the pins in position.
7. Remove cover plate from press and install on flywheel.

LONG 15-4A

This type clutch, Fig. 7, is a dry disc type in which pressure is exerted against the pressure plate by a series of coil springs. This pressure is augmented by six specially weighted clutch release levers.

Each of these levers, made of forged steel and mounted on needle roller bearings, is weighted at the outer end in such a way that the faster the clutch revolves the more pressure is exerted against the clutch plate. Thus the centrifugal force action supplements the normal spring pressure against the clutch plate, thereby increasing the torque transmitting ability of the clutch.

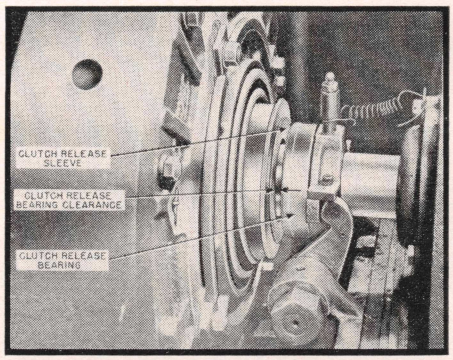

Fig. 4 Checking clearance between release bearing and release sleeve. Lipe-Rollway Type ML clutches

Fig. 6 Check fulcrum edge of pressure plate and adjusting plate. If in excess of 1/16", replace part. Lipe-Rollway Type ML clutches

With this clutch, no internal adjustments are necessary to compensate for wear.

Clutch Service

Unless special clutch rebuilding equipment is available, it is recommended that the clutch assembly be exchanged for a rebuilt unit should the clutch require rebuilding. The driven disc, however, may be replaced as follows:

1. Remove transmission and bell housing.
2. Using six 3/8-16 x 1¼" capscrews, screw them into the cover plate in the holes provided until the screw heads just bottom to hold the springs compressed.
3. Unfasten the cover plate from the flywheel.
4. Remove the driven disc.
5. Place the new disc on the flywheel with the short hub toward the flywheel.
6. Install the clutch assembly.
7. Push an aligning shaft (a spare transmission shaft will do) through the clutch hub and pilot bearing.
8. Tighten the cover-to-flywheel screws down evenly and securely, giving each a few turns at a time until all are seated.
9. Remove the aligning shaft and the six screws used to keep the springs compressed when clutch was removed.
10. Before attaching the transmission to the engine, check the release levers and bearing for clearance. Use care to see that the flexible oil tube does not rub against the cover plate.

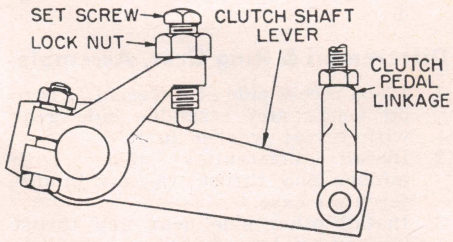

Fig. 8 Clutch pedal adjustment. Trucks with long clutch

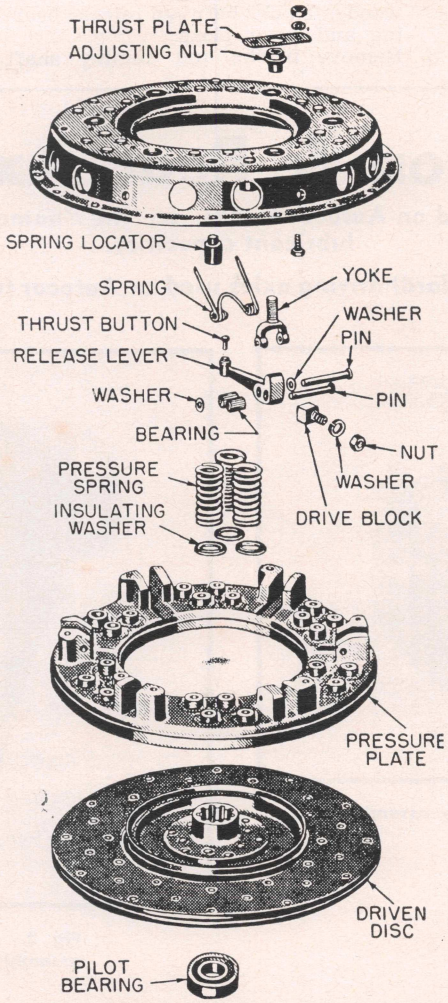

Fig. 7 Long 15-4A model single plate clutch

Clutch Pedal, Adjust

Clearance between the clutch release bearing and clutch levers is made by loosening the lock nut and turning the set screw, Fig. 8, as required to provide 1¼" to 1½" free pedal travel.

Adjustment of the release levers in the clutch assembly should never be attempted unless the assembly is removed and placed on a clutch rebuilder.

SPICER TWO PLATE CLUTCH

This type clutch, Fig. 9, is a two plate, dry disc type with the two driven plates mounted on the splined clutch shaft. The driving disc, which separates these two plates, is mounted within the flywheel on four pins. As an aid to gear shifting, a clutch brake is provided which comes into action when the clutch pedal is fully depressed.

Adjustment

1. Remove clutch housing cover and check clearance between clutch trunnion and forward side of clutch plate, Fig. 9. If the dimension is not 3/8" to ½", adjust as follows:
2. Remove capscrew and lock on flywheel ring. Block clutch pedal in depressed position and, with a hammer and drift, turn clutch ring clockwise to decrease distance between clutch trunnion and brake. Turn ring counterclockwise, if necessary, to increase clearance.
3. Engage clutch and recheck clearance.
4. Adjust clutch pedal linkage so that pedal free travel is 1¼" to 1½".
5. Run the engine and check to see that the full release of the clutch is obtained before the clutch brake comes into action. Gears should shift freely with no noticeable drag of clutch plates.
6. If clutch does not release before clutch brake comes into action, it will be necessary to readjust the clutch as outlined above.
7. As a final check, when the clutch pedal is fully depressed, it should have a minimum clearance of ½" above the toeboard. Readjust pedal linkage if necessary.

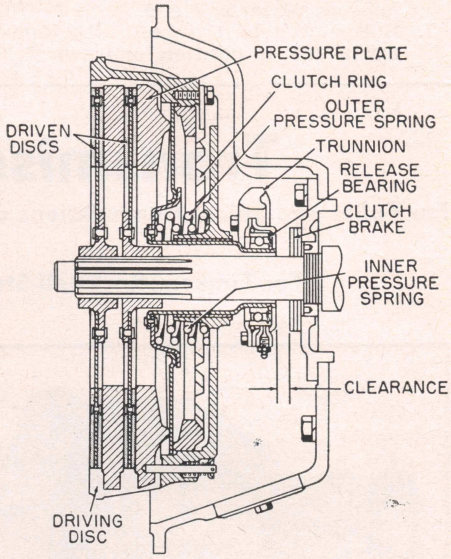

Fig. 9 Spicer two plate clutch

Driven Discs, Replace

1. After removing the transmission, insert two ¾" blocks between clutch release bearing and clutch cover plate.
2. Remove capscrew and lock and release adjusting ring by turning it counterclockwise.
3. Remove screws attaching spring plate and hub assembly to flywheel.
4. Remove cover plate, pressure plate, driving disc and driven discs.
5. Check clutch pilot bearing and replace if worn. Pack with bearing grease.
6. Using spare splined clutch shaft, assemble clutch driving plate, driven discs and clutch cover plate. *Driven discs must be positioned with offset*

hubs as shown in Fig. 9.
7. Bolt clutch to flywheel with dummy shaft in position and two ¾" wooden blocks between release bearing and cover plate.
8. Remove blocks and dummy shaft and install transmission. Then adjust the clutch and pedal linkage as outlined previously.

Transmission & Rear Axle Section

For Fuller and Spicer transmissions used on Autocar trucks, see the "name" chapter for service procedures and lubricant capacities.

For Timken (Rockwell-Standard) driving axles used on Autocar trucks, see Timken chapter.

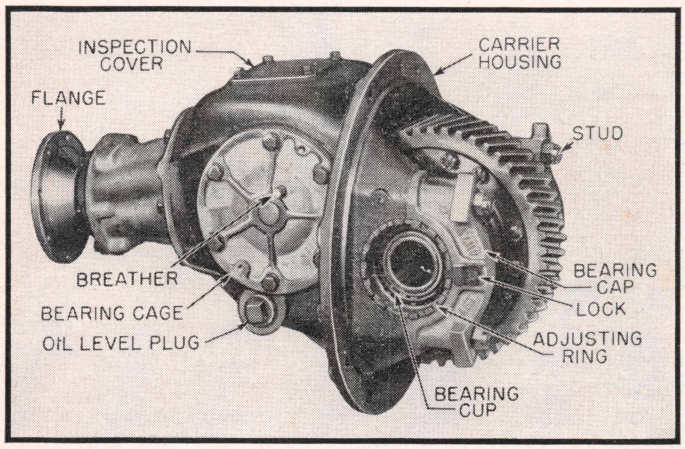

Fig. 1 Autocar ET and FT gear carrier assembly

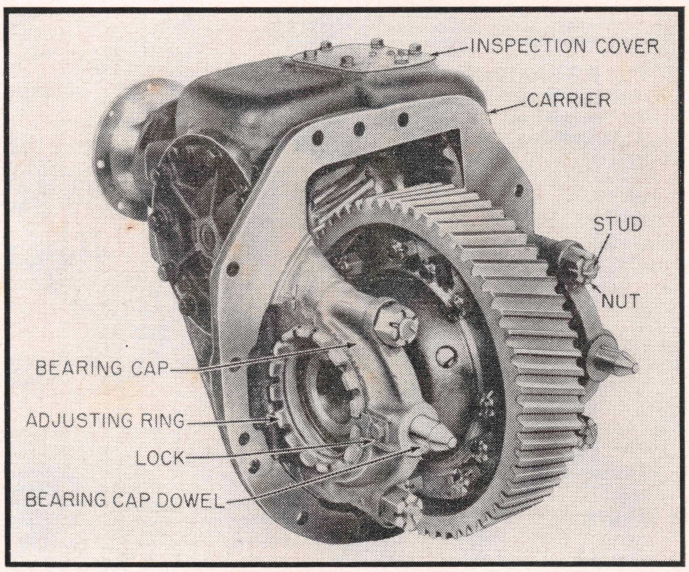

Fig. 2 Autocar GG and GH gear carrier assembly. Typical of FF and TK models

REAR AXLES

Make	Model①	Type	Oil, Pts.
Autocar	GG	D.R.	18
Autocar	GH	D.R.	18
Autocar	ET	D.R.	25
Autocar	FF	D.R.	20
Autocar	FT	D.R.	25
Autocar	TK	D.R.	18

① Model number embossed on carrier housing or axle housing.

AUTOCAR ET, FF, FT, GG, GH, TK

Double Reduction Axles

These double reduction axles are of full floating design in which all gears are mounted in a gear carrier which is detachable as a unit from the axle housing. Double reduction is accomplished by a spiral bevel pinion and gear in conjunction with a spur gear second reduction. The bevel pinion shaft, jackshaft and differential are mounted on tapered roller bearings that are fully adjustable for wear. Figs. 1 and 2 illustrate two designs.

Gear Carrier, Remove

1. Drain lubricant from housing.
2. Disconnect propeller shaft at companion flange.
3. Remove axle shafts. On ET and FT models, remove twelve nuts which secure axle shaft to wheel hub. Strike center of axle shaft flange a sharp blow with a hammer to loosen shaft.
4. Remove the carrier from the axle housing. On ET and FT models, remove the carrier stud nuts and, using two puller screws, withdraw the carrier from the housing. On TK, GG and GH models, remove the inspection cover from the top of the carrier and cut out the lock wire holding the carrier stud nut; then after removing all the housing stud nuts, remove the carrier from the housing.

Gear Carrier, Install

1. On ET and FT models, using a new gasket, install the gear carrier in the housing. Apply two upper nuts before the carrier is drawn up tight. On FF, GG, GH and TK models, install the gear carrier in the housing, using a new gasket, entering bearing cap dowels in their sockets, Fig. 2. Install the carrier dowel pins and tighten all carrier stud nuts.
2. On TK, GG and GH models, install locking wire in the carrier stud nut under the carrier inspection cover, and replace the inspection cover with a new gasket.
3. Install axle shafts, assemble propeller shaft to companion flange and fill housing with lubricant to the proper level.

Differential & Ring Gear, Disassemble

1. With center punch, mark carrier and caps to insure correct reassembly. Also mark two halves of differential case and ring gear.
2. Remove differential bearing adjusting ring lock from each carrier cap.
3. Remove carrier cap stud nuts or capscrews. Remove caps and lift ring gear and differential assembly out of gear carrier.
4. Pull bearing cones from differential case with bearing puller.
5. Remove nuts and drive bolts out of differential case. Separate two halves of differential case from ring gear.
6. Remove differential spider, pinions, side gears and thrust washers, Fig. 3.

Differential & Ring Gear, Assemble

1. Place recess side of differential case on bench and assemble side gear with thrust washer in it.
2. Install differential spider with pinions and thrust washers in differential case.
3. Install other side gear and thrust washer on top of pinion.
4. On ET, FT and FF models, one side of the inner face of the ring gear is

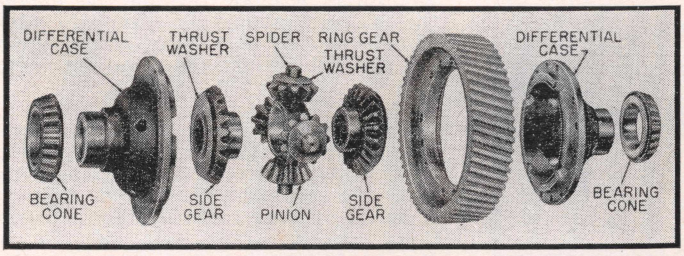

Fig. 3 Layout of differential and ring gear parts. Autocar all models

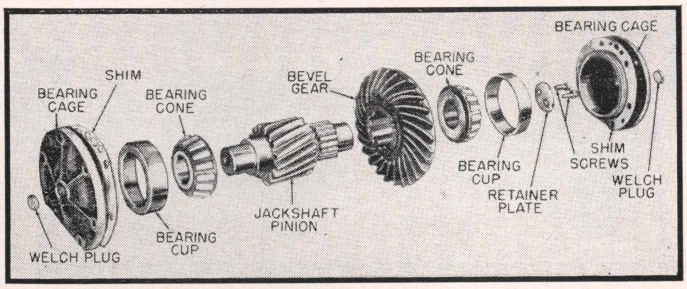

Fig. 4 Layout of jackshaft and bevel gear parts. Autocar ET, FF, FT, TK

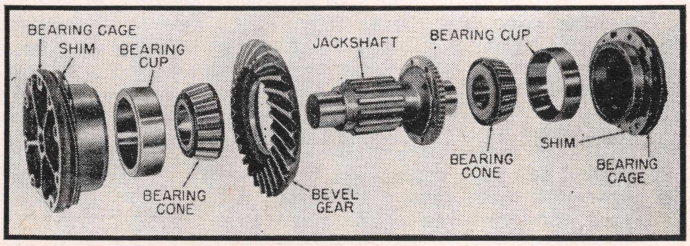

Fig. 5 Layout of jackshaft and bevel gear parts. Autocar GG, GH

machined with a $\frac{1}{32}$" step, and this side must be uppermost when placing the gear on the assembled half of the case.

5. Place tongue side of differential case on top of the ring gear and drive it down tight with bolt holes registering and center punch marks matched.
6. Bolt complete assembly together, driving the bolts through from the tongue side of the case. Secure nuts with cotter pins.
7. Press bearing cones on differential.
8. With bearing cups over the cones, assemble differential and ring gear in carrier, centering gear with spur pinion.
9. Install adjusting rings and bearing caps, making sure threads in rings mesh with threads in carrier and caps. Tighten bearing cap nuts or cap screws and then slacken off sufficiently to allow rings to turn.
10. With adjusting rings, tighten up on differential bearings until there is a slight drag when the ring gear is turned by hand. After bearings are properly adjusted, if ring gear and pinion are not centralized, gear may be moved sideways by loosening one adjusting ring and tightening the opposite ring a corresponding amount.
11. Tighten bearing cap stud nuts or capscrews and lock with cotter pins or, where capscrews are used, apply locking wire.
12. Apply adjusting ring locks and bend up locking washers.

Jackshaft & Bevel Gear, Disassemble

1. Referring to Figs. 4 and 5, remove cap screws holding bevel gear oil trough.
2. With center punch, mark bearing cages and carrier to aid in reassembly.
3. Remove cap screws from each bearing cage and withdraw cages from carrier with the aid of jack screws.
4. Wire shim pack to each bearing cage.
5. Remove jackshaft through rear of gear carrier.
6. On ET, FT, FF, TK models, cut lock wire and remove two cap screws holding retainer plate.
7. Use bearing puller to remove bearing cones from jackshaft.
8. Press bevel gear off jackshaft in arbor press. On GG and GH models, first remove locking wires and cap screws before pressing off gear.

Jackshaft & Bevel Gear, Assemble

1. Press bevel gear on jackshaft in arbor press. Press gear against shoulder on jackshaft on all models except TK with 25-tooth bevel gear. With the 25-tooth bevel gear a spacer is required between gear and shaft shoulder (part 4TG21219).
2. On GG and GH models, secure with cap screws and locking wire.
3. Press bearing cones on jackshaft.
4. On ET, FF, TK models, install bearing retainer plate on end of jackshaft and secure with cap screws and locking wire.
5. Assemble jackshaft in gear carrier with bevel gear on right side.
6. Replace bearing cages with original shim pack under each cage.
7. New bearings should be adjusted so there is a slight drag when the shaft is turned by hand. Add or remove shims under bearing cages as required to obtain correct result.
8. Install oil trough to carrier housing.

Bevel Pinion & Cage, Disassemble

1. Referring to Fig. 6, remove cap screws and withdraw pinion cage from carrier with the aid of jack screws.
2. Wire shim pack to bearing cage.
3. On ET, FF, FT models, remove cotter pin and nut holding companion flange on keyed end of shaft. Pull off flange and remove drive key, pinion shaft bearing lock nuts and lock washer. On GG, GH and TK models, pull companion flange off splined end of pinion shaft.
4. Place bearing cage in arbor press with gear down and apply pressure to the flange end of pinion shaft. Press shaft from cage.
5. Remove shims, spacer and bearing cone from pinion shaft.
6. Remove pinion cage cap and gasket; also oil seal from bearing cap.

Bevel Pinion & Cage, Assemble

The use of a dummy pinion shaft having the bearing lands turned down .002 to .005" undersize will greatly facilitate the proper adjustment of the pinion shaft bearings. After securing the correct adjustment, the bearing cones, spacer and shims can be transferred to the standard pinion shaft for assembly in the bearing cage.

1. Install rear bearing cone on dummy pinion shaft tight against gear.
2. Assemble bearing spacer on shaft, together with shim pack as removed.
3. On ET, FF and FT models, insert pinion shaft in bearing cage and tap front bearing cone into place, tightening the assembly with the bearing lock nut.
4. On GG, GH and TK models, insert pinion shaft in bearing cage and tap front bearing cone into place. Place a sleeve of suitable length over end of shaft so that approximately half of threads are exposed. Then tighten up on assembly with flange nut.
5. On all models, new bearings should be adjusted so there is a slight drag when rotating the pinion by hand. Correct adjustment is secured by adding or removing shims between the front bearing cone and bearing spacer.
6. Transfer bearing cones, spacer and shims from the dummy shaft to the standard pinion shaft for final assembly. On ET, FF and FT models, tighten the bearing nut, lock washer and jam nut and bend the lugs of the washer over the jam nut.

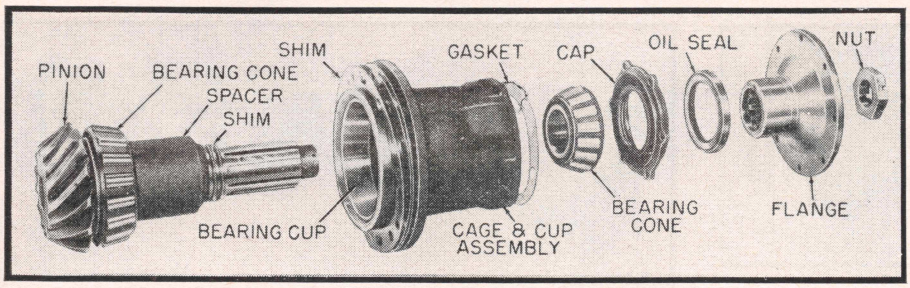

Fig. 6 Layout of bevel pinion and cage parts. Autocar GG, GH, TK

7. Install a new oil seal in the bearing cap and assemble the cap to the bearing cage, using a new gasket.
8. On ET, FF and FT models, install the companion flange drive key, flange, lock nut and cotter pin. On GG, GH and TK models, press the companion flange on the splined end of the pinion shaft and install the flange nut and cotter pin.
9. Assemble bevel pinion and cage in gear carrier, using shims removed on disassembly.

Bevel Gear & Pinion, Adjust

Correct adjustment of the spiral gear and pinion is essential to their proper operation. Unless there is nearly full tooth contact, excessive loads will be concentrated on small areas of the teeth and rapid wear will result.

In the trial set-ups, the pinion cage and jackshaft bearing cages may be pulled up with only four bolts each, two on a side, in order to facilitate the addition or removal of shims if required.

If a rear axle gauge (Tool G-1928) is available, it should be used in making the preliminary setting of the bevel pinion. This gauge is placed in the carrier housing in the position normally occupied by the jackshaft.

It will be noted that a number, such as +7 or −5, is etched on the rear face of the pinion. The dial on the gauge should be turned to bring the indicator pin in contact with the face of the gear at the point where this number appears.

The reading on the gauge should be within .003″ of the number etched on the face of the pinion. If the gauge reading exceeds this limit, it will be necessary to add or remove shims to alter the relation of the bevel pinion to the jackshaft.

Following the installation of the pinion assembly, the jackshaft should be placed in the carrier housing and the jackshaft bearings adjusted as outlined under "Jackshaft and Bevel Gear, Assemble".

Backlash—If rear axle gauge (G-1928) is not available, it will be necessary to check the backlash. Make preliminary check of backlash between the two gears with a dial indicator placed so that the stem bears against the heel of a bevel gear tooth. As the gear is rocked back and forth, without turning the pinion, the indicator should show .006 to .010″ backlash. Add or remove shims under the pinion bearing cage to adjust backlash.

Correct Tooth Contact—Paint the bevel gear teeth with a light coating of red lead, white lead or Prussian blue. Revolve the gears and observe the contact. A series of gear tooth contact illustrations appear in the *Eaton & Timken Rear Axles* chapter of this manual. Refer to these illustrations and correct as follows:

High Narrow Contact—To correct this condition, remove shim, allowing pinion to move toward gear. This adjustment may decrease backlash which can be readjusted if necessary by moving the bevel gear away from the pinion.

Sidewise movement of the jackshaft is accomplished by removing shims from one bearing cage and adding a corresponding number of shims under the opposite bearing cage. The bearing adjustment is not altered if this procedure is carefully followed.

Low Narrow Contact—With this condition, move pinion away from bevel gear by adding shims under the bearing cage. Correct the backlash by moving gear closer to pinion.

Heavy Heel Contact—To correct this condition, move the bevel gear closer to the pinion. Add shims under pinion bearing cage to maintain correct backlash.

Heavy Toe Contact—This condition is corrected by moving the bevel gear away from the pinion. To obtain proper backlash, remove shim from pinion bearing cage.

Steering Gear Section

ROSS GEAR

Twin Lever Mounted Type

The steering gear, Fig. 1, is the cam and twin lever type in which the cam is mounted on ball bearings and the lever shaft turns on steel-backed bronze bushings.

As the cam is turned by the wheel tube, the follower studs are pulled along the cam groove, causing the lever arm to rotate the lever shaft. The pitman arm, which is clamped on the splined end of the lever shaft and moves with it, turns the front wheels through the linkage.

Cam End Play, Adjust

1. Free the steering gear of all load by disconnecting the drag link from the pitman arm and loosening the steering column braces.
2. Loosen the lock nut and adjusting screw in the side cover to free the studs in the cam groove.
3. Remove the four upper cover stud nuts and raise the housing upper cover to permit removal of the adjusting shims, which are of .002″, .003″ and .010″ thickness.
4. Clip and remove one thin adjusting shim and then tighten down the cover with the four nuts and check the adjustment. There should be a slight drag but the steering wheel should turn freely with the thumb and forefinger lightly gripping the rim.
5. If necessary, remove or replace shims until the adjustment is correct.

Lever Shaft Backlash, Adjust

1. Centralize the steering gear by turning the wheel all the way to the right and from this point count the number of turns required to reach the end of travel to the left. Turn the wheel back exactly half this number of turns which is the mid-position.
2. Tighten the side cover adjusting screw until a very slight drag is felt through the mid-position when turning the steering wheel slowly from one side to the other. *The gear must not bind in any position. A slight drag should be felt in the mid-position only.*
3. After proper adjustment has been made, tighten the adjusting screw lock nut and recheck the gear for binding.

Stud Roller Bearing, Adjust

In most cases the adjustments outlined above will be adequate. However, in some cases it may be necessary to adjust the stud roller bearing units in the lever shaft.

The roller bearings should be preloaded at all times. A heavy drag should be felt when revolving the studs by hand. If a torque wrench is available, the bearings should be adjusted as follows:

Lever Shaft Dia.	Torque to Revolve Stud
1⅜"	3-4 in. lb.
1½"	3-4 in. lb.
1⅝"	4-8 in. lb.
1¾"	5-11 in. lb.

1. With lever shaft removed from steering gear housing, wash the bearings in solvent and blow dry with compressed air, using care not to spin the bearings. Lubricate bearings with light oil.
2. Straighten out prong of locking washer to release stud nut. Remove nut and install new locking washer.
3. While holding stud from turning with a suitable spanner wrench on the locking washer, tighten the nut as required to bring it within the proper torque limits.
4. When proper adjustment has been secured, bend prong of washer against side of nut to keep it from turning.
5. Lubricate bearings with gear oil and assemble lever shaft in gear housing.

Column Alignment

After the steering gear has been reassembled and all adjustments completed, tighten the mounting bracket as well as the column upper bracket and braces. If necessary, renew the bushing in the column top bracket. The steering column must not be sprung in any direction, and any misalignment must be corrected or it will produce stiffness in the steering gear.

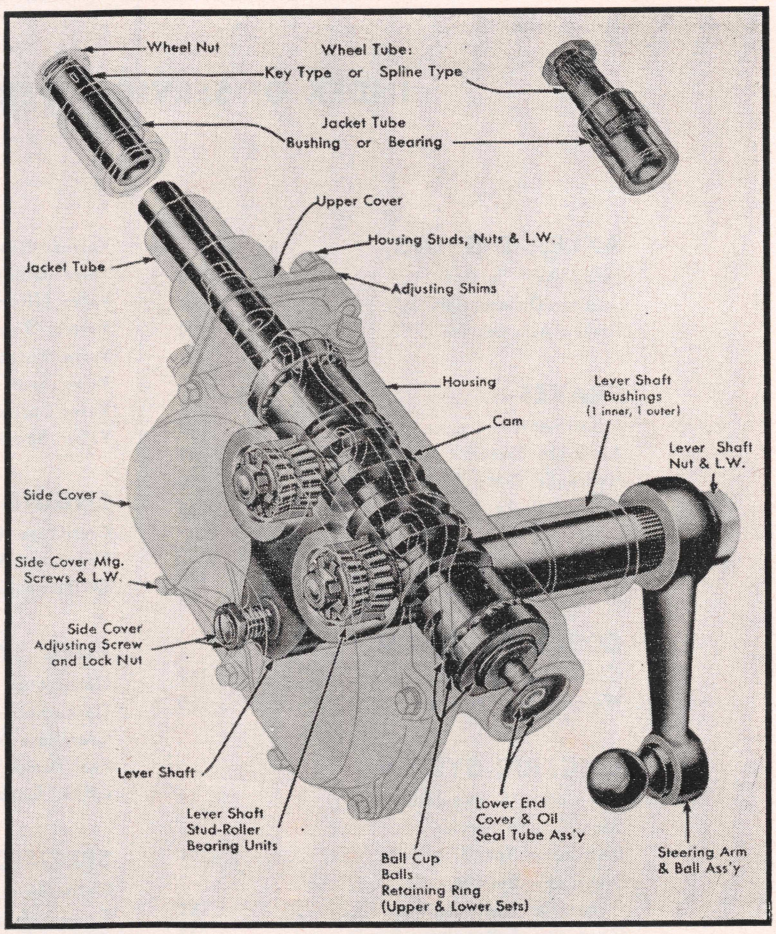

Fig. 1 Ross cam and twin lever mounted steering gear

BROCKWAY

INDEX OF SERVICE OPERATIONS

PAGE NO.

AXLES, DRIVING
Eaton Axle Service 176
Locking Differentials 169
Timken Axle Service 209

BRAKES
Adjustments 252
Air Brake System 259
Hydraulic Brake System 250
Vacuum Brake Boosters 268

CLUTCH 356

COOLING SYSTEM
Cooling System Capacity 349
Water Pump Repairs 355

ELECTRIC SYSTEM
Alternators & Regulators 37
Dash Gauge Service 93
Distributor Specifications 351
Distributor Service 7
Generator Specifications 351
Generator & Regulator Service 27
Ignition, Transistorized 22
Ignition Timing 355
Starting Motor Specifications 349
Starting Motor Service 65
Starter Switch Service 85

ENGINE
Camshaft & Bearings 354
Crankshaft Bearing Specifications 351
Crankshaft End Play, Adjust 355
Cylinder Head, Replace 352
Main Bearings, Replace 355
Piston Pins, Replace 354
Piston Rings, Replace 354
Piston & Ring Specifications 351
Pistons & Rods, Remove 354
Piston & Rod, Assemble 354
Pistons, Replace 354
Rocker Arm Service 352
Rod Bearings, Replace 355
Timing Gears, Replace 354
Valves, Adjust 352

PAGE NO.

Valves, Grind 353
Valve Guides 353
Valve Lifters 354
Valves, Remove 353
Valve Rotators 353
Valve Seat Inserts 353
Valve Spring Testing 353
Valve Specifications 350

ENGINE OILING
Crankcase Capacity 349
Crankcase Ventilation 6
Oil Pump Repairs 355

FUEL SYSTEM
Carburetor Adjustments 355
Carburetor Governors 356
Crankcase Ventilation 6
Fuel Pump Service 104
L.P.G. Carburetion 109

SPECIFICATIONS
Carburetor Adjustment 355
Crankshaft & Bearing 351
Distributor 351
Generator & Regulator 351
Piston, Pin & Ring 351
Starting Motor 349
Tune Up 350
Valve 350
Wheel Alignment 350

STEERING GEARS 358

TRANSFER CASES 242

TRANSMISSIONS
Clark 110
Fuller 122
New Process 135
Spicer 141
Warner 164
Powermatic 281

TUNE UP SERVICE 2

MODEL INDEX & ENGINE APPLICATION

ENGINE IDENTIFICATION—Engine model is stamped on plate attached to engine. Transmissions also have identification plates attached to them which gives the transmission manufacturers name and model of unit.

Model	Year	Standard Engine Make	Standard Engine Model ①	Crank-case Refill Capacity, Qts.	Cooling System Capacity, Qts.
88WH	1952–55	Continental	M6290(37B)	7	25
88WHX	1955–56	Continental	M6290(38B)	7	25
128W	1952–55	Continental	M6330(40B)	7	25
128WX	1955–61	Continental	M6330(40B)	7	23
M146-9	1952–54	Continental	M6330(40B)	7	22
146BB	1952–54	Continental	M6330(40B)	7	25
146W	1952–55	Continental	M6330(40B)	7	25
147W	1955–61	Continental	M6363(41BD)	7	24
147WL	1955–61	Continental	M6363(41BD)	7	24
148BB	1952–54	Continental	B6427(42BX)	8	30
148SL	1955	Continental	B6427(42BD)	8	30
148SLD	1955–61	Continental	B6427(42BD)	8	29
148W	1952–55	Continental	B6427(42BX)	8	30
148WD	1955–61	Continental	B6427(42BD)	8	29
151W	1952–55	Continental	B6427(42BX)	8	32
152BB	1952–54	Continental	B6427(42BX)	8	32
152W	1952–55	Continental	B6427(42BX)	8	32
153BB	1952–54	Continental	B6427(42BX)	8	32
153SL	1957–58	Continental	B6427(42BD)	8	32
153SQ	1955–58	Continental	B6427(42BD)	8	32
153W	1952–55	Continental	B6427(42BX)	8	32
153WD	1955–58	Continental	B6427(42BD)	8	33
154T	1954	Continental	B6427(42BY)	8	30
154TS	1954	Continental	B6427(42BY)	8	30
154W	1952–54	Continental	B6427(42BX)	8	30
154WHL	1952–54	Continental	R6572(48B)	14	40
154WHS	1952–54	Continental	R6513(46B)	14	40
155W	1955–61	Continental	B6427(42BD)	8	29
157L	1961–63	Continental		8	33
157LL	1961–63	Continental		8	33
157LQ	1961–63	Continental		8	33
240XW	1952–54	Continental	R6513(46B)	14	40
254W	1955	Continental	R6513(46B)	14	40
254W	1955–58	Continental	R6513(46BD)	14	40
255W	1955–58	Continental	R6572(48BD)	14	40
256W	1955–59	Continental	R6513(46FD)	14	40
257T	1961–63	Continental		14	44
L257T	1961–63	Continental		12	34
H257T	1961–63	Continental		28	41
F257T	1961–63	Continental		28	41
N257T	1961–63	Continental		28	42
258T	1961–63	Continental		14	44
L258T	1961–63	Continental		12	34
H258T	1961–63	Continental		28	41
F258T	1961–63	Continental		28	41
N258T	1961–63	Continental		28	42
260T	1961–63	Continental		14	44
F260T	1961–63	Continental		28	41
N260T	1961–63	Continental		28	42
260L	1961–63	Continental		14	44
H260L	1961–63	Continental		28	41
F260L	1961–63	Continental		28	41
N260L	1961–63	Continental		28	42
260LQ	1961–63	Continental		14	44
H260LQ	1961–63	Continental		28	41
F260LQ	1961–63	Continental		28	41
N260LQ	1961–63	Continental		28	42
260LF	1961–63	Continental		14	44
F260LF	1961–63	Continental		28	41
N260LF	1961–63	Continental		28	42
258W	1955–59	Continental	R6572(48FD)	14	40
260LD	1955–58	Continental	R6513(46BD)	14	40
260SF	1955–58	Continental	R6572(48BD)	14	40
260SQ	1955–58	Continental	R6572(48BD)	14	40
260WLD	1955–58	Continental	R6572(48BD)	14	40
260WD	1955–58	Continental	R6572(48BD)	14	40
260XL	1952–54	Continental	R6513(46B)	14	40
260XLBB	1952–54	Continental	R6513(46B)	14	40
260XWL	1952–54	Continental	R6572(48B)	14	40

① Numbers in parentheses are Brockway engine designations.

STARTING MOTOR SPECIFICATIONS

Unit Part No. ①	Rotation ②	Brush Spring Tension, Oz.	No Load Test			Torque Test		
			Amperes	Volts	R.P.M.	Amperes	Volts	Torque Lb. Ft.
MAB-4071	C	42–53	60	5	3600	390	2	9.2
MAS-4102	C	42–53	40	10	3900	340	4	13.2
MAW-4042	C	42–53	65	5	4300	335	2	6.0
ML-4301	C	38–49	65	5	2250	370	2	10.3
ML-4303	C	42–53	65	5	2250	370	2	10.3
ML-4318	C	42–53	65	5	2250	370	2	10.3

① Starter number stamped on plate riveted to housing. ② As viewed from drive end; C—Clockwise.

GENERAL ENGINE SPECIFICATIONS

Year	Engine Model	No. Cyls. & Valve Location	Bore & Stroke	Piston Displacement, Cu. In.	Compression Ratio①	Maximum Brake H. P. @ R. P. M.①	Maximum Torque, Lb. Ft. @ R. P. M.①	Normal Oil Pressure, Lbs.
1952–57	38B	6 In Block	3¾ x 4⅜	290	6.3	104 @ 3200	212 @ 1250	60
1952–53	40B	6 In Block	4 x 4⅜	330	6.7	125 @ 3000	258 @ 1400	60
1955–62	41BD	6 In Block	4 x 4 13/16	363	6.7	150 @ 3200	293 @ 1600	60
1955–62	42BD	6 In Block	4 5/16 x 4⅞	427	6.4	165 @ 3000	352 @ 1600	60
1952–55	42BX	6 In Block	4 5/16 x 4⅞	427	6.7	142 @ 3000	332 @ 1200	60
1954	42BY	6 In Block	4 5/16 x 4⅞	427	6.7	142 @ 3000	332 @ 1200	60
1952–55	46B	6 In Head	4½ x 5⅜	513	5.9	180 @ 2800	400 @ 1300	60
1955–61	46BD	6 In Head	4½ x 5⅜	513	6.2	220 @ 2800	412 @ 1400	60
1955–61	46FD	6 In Head	4½ x 5⅜	513	6.2	220 @ 2800	412 @ 1400	60
1952–54	48B	6 In Head	4¾ x 5⅜	572	6.0	200 @ 2800	450 @ 1300	60
1955–62	48BD	6 In Head	4¾ x 5⅜	572	6.3	230 @ 2800	484 @ 1400	60
1955–62	48FD	6 In Head	4¾ x 5⅜	572	6.3	230 @ 2800	484 @ 1400	60
1958–62	49BD	6 In Head	4⅞ x 5⅜	602	6.3	232 @ 2800	482 @ 1200	60

①—Current production.

TUNE UP & VALVE SPECIFICATIONS

Year	Engine Model	Firing Order	Spark Plugs		Ignition Timing		Cylinder Head Torque, Lb. Ft.	Valve Seat Angle, Degrees	Valve Clearance H-Hot C-Cold		Valve Spring Pressure, Lb. @ In. Length
			Type ⑤	Gap	Timing Mark	Location			Intake	Exhaust	
1952–53	38B	153624	D14	.028	½″ BTDC	Flywheel	70–75	②	.020C	.022C	119 @ 1½
1954–57	38B	153624	D14	.025	½″ BTDC	Flywheel	70–75	②	.022C	.024C	119 @ 1½
1952–53	40B	153624	D14	.028	½″ BTDC	Flywheel	70–75	②	.020C	.022C	119 @ 1½
1954–63	40BD	153624	D10	.025	½″ BTDC	Flywheel	70–75	②	.020H	.022H	119 @ 1½
1955–63	41BD	153624	D14	.025	5/16″ BTDC	Flywheel	70–75	②	.016H	.024H	119 @ 1½
1952–53	42BX	153624	D14	.028	½″ BTDC	Flywheel	70–75	②	.020H	.022H	144 @ 1.316
1954–55	42BX	153624	D10	.030	⅝″ BTDC	Flywheel	70–75	②	.016H	.022H	144 @ 1.316
1954	42BY	153624	D10	.025	⅝″ BTDC	Flywheel	70–75	②	.016H	.022H	144 @ 1.316
1955–63	42BD	153624	D10	.025	3/16″ BTDC	Flywheel	70–75	②	.016H	.024H	144 @ 1.316
1952–55	46B	153624	D10	.025	1″ BTDC	Flywheel	85–95	②	.020H	.024H	①
1955–63	46BD	153624	D10	.025	⅝″ BTDC	Flywheel	85–95	②	.023C	.033C	①
1955–63	46FD	153624	D10	.025	⅝″ BTDC	Flywheel	85–95	②	.023C	.030H	①
1952–54	48B	153624	D10	.025	⅝″ BTDC	Flywheel	85–95	②	.020H	.024H	①
1955–63	48BD③	153624	D10	.025	½″ BTDC	Flywheel	85–95	②	.020H	.030H	①
1955–63	48FD③	153624	D10	.025	½″ BTDC	Flywheel	85–95	②	.020H	.030H	①
1957–63	48BD④	153624	D10	.020	TDC	Flywheel	85–95	②	.023C	.033C	①
1957–63	48FD④	153624	D10	.020	TDC	Flywheel	85–95	②	.023C	.033C	①
1958–63	49BD	153624	D10	.025	½″ BTDC	Flywheel	85–95	②	.020H	.030H	①

①—Inner spring 90 @ 1.367″, outer 160 @ 1.617″. ②—Intake 30°, exhaust 45°. ③—Gasoline. ④—LPG. ⑤—Champion. Normal Service

WHEEL ALIGNMENT

Axle Model	Caster	Camber	Toe-In
32350①	1	1	1/16-⅛
FD-901①	1	1	1/16-⅛
FE-10A-43②	2	1	1/16-⅛
FG-900③	2	1	1/16-⅛

①—Kingpin angle 5½°.
②—Kingpin angle 0°.
③—Kingpin angle 8°.

Unit Part No. ①	Rotation ②	Cam Angle, Degrees	Breaker Gap, In.	Condenser Capacity, Mfds.	Breaker Arm Spring Tension, Oz.	Centrifugal Advance Deg. @ R.P.M. of Dist.		Vacuum Advance		
						Advance Starts	Full Advance	Inches of Vacuum to Start Plunger Movement	Inches of Vacuum for Full Plunger Travel	Maximum Vacuum Advance, Dist. Degrees
1GC-5001-B	CC	39	.020	.25–.28	17–20	1 @ 275	15 @ 1200	None	None	None
1GC-6002-1AE	CC	39	.020	.25–.28	17–20	1 @ 400	9 @ 1250	None	None	None
1GC-6002-1AF	CC	39	.020	.25–.28	17–20	1 @ 475	6 @ 1425	None	None	None
1GC-6002-1AG	CC	39	.020	.25–.28	17–20	1 @ 425	8 @ 1425	None	None	None
1GC-6002-1E	CC	39	.020	.20–.25	17–20	1 @ 390	9 @ 1250	None	None	None
1GC-6002-1R	CC	39	.020	.20–.25	17–20	1 @ 400	8 @ 1420	None	None	None
1GC-6002-1S	CC	39	.020	.20–.25	17–20	1 @ 475	6 @ 1420	None	None	None
1GC-6010-1B	CC	39	.020	.20–.25	17–20	1 @ 465	6 @ 1415	None	None	None
1GC-6010-1C	CC	39	.020	.20–.25	17–20	1 @ 285	14 @ 1600	None	None	None
1GC-6010-1D	CC	39	.020	.25–.28	17–20	1 @ 300	14 @ 1600	None	None	None
1GC-6010-1E	CC	39	.020	.25–.28	17–20	1 @ 325	12 @ 1400	None	None	None

①—Distributor number stamped on plate riveted to housing. ②—As viewed from top; CC—Counterclockwise.

PISTON, PIN, RING, CRANKSHAFT & BEARING SPECIFICATIONS

Year	Engine Model	Wristpin Diameter	Piston Clearance, Inch②	Ring End Gap, In. (Minimum)		Crank Pin Diameter, Inch	Rod Bearing Clearance, In.	Rod Bolt Torque, Lb. Ft.	Main Bearing Journal Diameter, In.	Main Bearing Clearance, Inch	Main Bolt Torque, Lb. Ft.
				Comp.	Oil						
1952–57	38B	1.109	.005	.008	.008	2.248–2.249	.001–.0028	70–75	2.623–2.624	.0015–.0037	①
1954–62	40BD	1.109	.005	.008	.008	2.248–2.249	.001–.0028	70–75	2.624–2.625	.0015–.0037	①
1955–63	41BD	1.109	.002	.008	.008	2.248–2.249	.001–.0028	70–75	2.624–2.625	.0015–.0037	①
1955–63	42BD	1.250	.003	.008	.008	2.498–2.499	.001–.003	100–110	2.873–2.874	.0015–.0037	100–110
1952–55	42BX	1.250	.005	.008	.008	2.498–2.499	.001–.003	100–110	2.873–2.874	.0015–.0037	100–110
1954	42BY	1.250	.005	.008	.008	2.498–2.499	.001–.003	100–110	2.873–2.874	.0015–.0037	100–110
1952–55	46B	1.500	.005	.013	.013	2.999–3.000	.001–.003	85–95	3.249–3.250	.0022–.004	85–95
1955–63	46BD	1.500	.005	.013	.013	2.999–3.000	.001–.003	85–95	3.249–3.250	.0022–.004	85–95
1955–63	46FD	1.500	.005	.013	.013	2.999–3.000	.001–.003	85–95	3.249–3.250	.0022–.004	85–95
1952–54	48B	1.500	.005	.013	.013	2.999–3.000	.001–.003	85–95	3.249–3.250	.0022–.004	85–95
1955–63	48BD	1.500	.005	.013	.013	2.999–3.000	.001 .003	85–95	3.249–3.250	.0022–.004	85–95
1955–63	48FD	1.500	.005	.013	.013	2.999–3.000	.001–.003	85–95	3.249–3.250	.0022–.004	85–95
1958–63	49BD	1.500	.005	.013	.013	2.999–3.000	.001–.003	85–95	3.249–3.250	.0022–.004	85–95

①—½″ 100-110, 9/16″ 130–140. ②—Pistons removed from above.

GENERATOR & REGULATOR SPECIFICATIONS

★To Polarize Generator: For internally grounded systems, disconnect field lead from regulator and momentarily flash this lead to the regulator battery terminal. For externally grounded systems, reconnect leads to regulator; then momentarily connect a jumper wire from the "Arm" to the "Bat" terminals of the regulator.

Generator						Regulator					
Gen. No.①	Rotation ⑤	Brush Spring Tension, Oz.	Rated Cap. Amps.	Gen. Field Ground Location★	Field Current	Reg. No.	Cutout Relay		Voltage Setting	Current Setting	Current & Voltage Reg. Arm. Air Gap, In.
							Closing Voltage	Arm. Air Gap, In.			
GCH-4612B-1	C	23–26	50	Internal	5.8–6.4②	VRC-4101B	6.5	.060	7.2	50	④
GCH-4613A-1	C	23–26	50	Internal	5.8–6.4②	VRC-4101B	6.5	.060	7.2	50	④
GDJ-4829A	C	36–60	55	Internal	6.9–7.7③	VRH-4102A	13.0	.060	14.1	55	④
GDJ-4844A	C	36–60	55	Internal	1.1–1.3③	VRH-4102A	13.0	.060	14.1	55	④
GEB-6001A	C	64–68	32	External	3.7–4.3②	VRP-4004C	6.3	.031	7.2	32	.048
GEB-6001C	C	64–68	32	External	3.7–4.3②	VRP-4004C	6.3	.031	7.2	32	.048

①—Generator number stamped on plate riveted to housing. ②—At 5 volts. ③—At 10 volts.
④—Voltage unit .040″, current unit .047″. ⑤—As viewed from drive end; C—Clockwise.

Engine Section

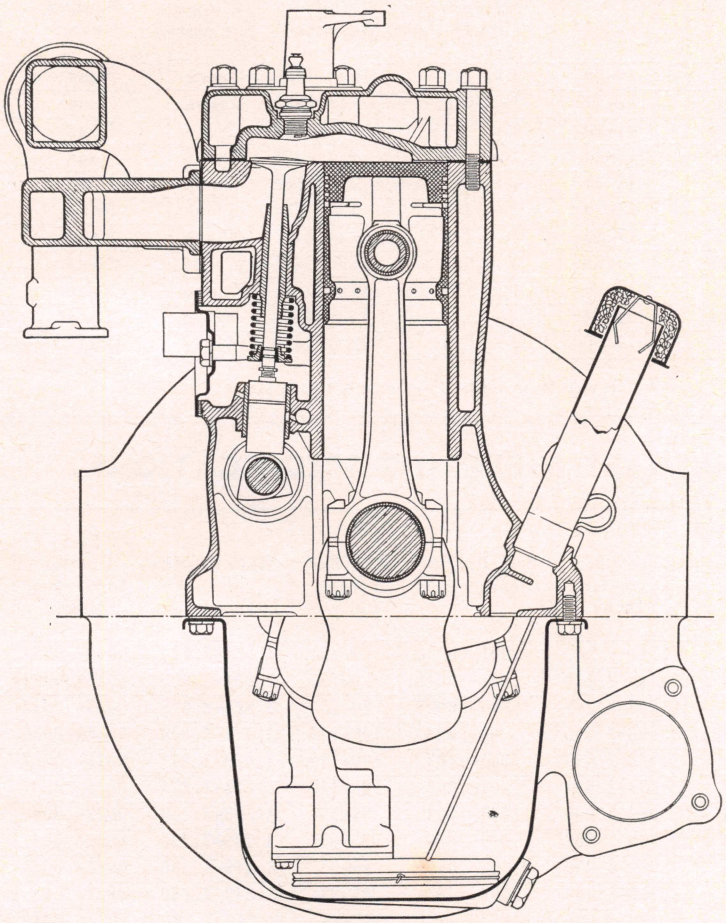

Fig. 1 Cross section of L-head engine. Typical of 38B, 40B, 41BD, 42BD, 42BX, 42BY

ROCKER ARM SERVICE

Overhead Valve Engines

Sludge and gum formation in the rocker arms and shafts will restrict the normal flow of oil to the rocker arms and valves. Each time the rocker arm and shaft assemblies are removed they should be disassembled and thoroughly cleaned.

When disassembling rocker arms, place all parts on the work bench in their proper sequence to insure correct assembly.

Clean all sludge and gum formation from the inside and outside of the shaft. Clean oil holes and passages in the rocker arms and shafts. Clean the oil connector. Inspect the shafts for wear.

Check the ball ends of the rocker arms to be sure they are not pitted or rough. If used in this condition, it will be difficult to maintain valve clearances.

VALVES, ADJUST

All Engines

Adjust the valves to the clearances given in the *Tune Up & Valve Specifications* table. If the valves are to be adjusted warm, run the engine for about 30 minutes to normalize the expansion of all parts.

On overhead valve engines, be sure the cylinder head is properly tightened down before adjusting valve clearances.

CYLINDER HEAD, REPLACE

All Engines

When removing a cylinder head a chisel or screw driver should never be used to pry it loose from the cylinder block. Use an eyebolt in the third or fourth spark plug hole, lifting up on the eyebolt while tapping lightly around the edges of the head with a lead or rawhide hammer or mallet. Be sure all the head stud nuts or bolts have been removed before starting to remove the head.

In replacing the head, the stud nuts or bolts at the center of the head should be tightened first and then work outward from side to side and to the ends. Draw the nuts or bolts down evenly until all are normally tight. After the engine has run long enough to warm it up, make a final tightening with a torque wrench to the torque loads given in the *Tune Up & Valve Specifications* table.

On overhead valve engines, be sure to check the valve clearances after the final tightening.

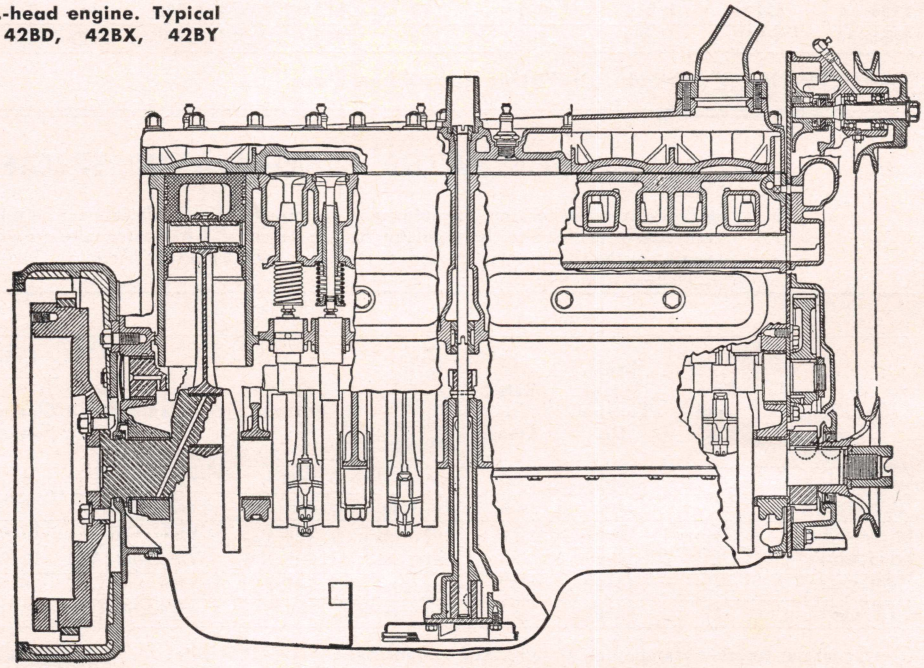

Fig. 2 Side section of L-head engine. Typical of 38B, 40B, 41BD, 42BD, 42BX, 42BY

VALVES, REMOVE

L-Head Engines

After taking off the cylinder head, remove the valve chamber covers and use cloth to block off the holes in the valve chamber to prevent the valve locks from falling into the crankcase.

With a suitable valve spring compressor, raise the springs on those valves which are closed and remove the valve locks. Then turn the crankshaft until those valves which are open are closed and remove the remaining valve locks.

Remove all valves and place them in a board with numbered holes so that they can be identified as to the valve port from which they were removed.

Overhead Valve Engines

After removing the cylinder head and rocker arm assembly, use a suitable spring compressor to compress the springs. Remove the valve locks and springs. Check the keeper grooves in the valve stems for burrs and remove any burrs with a file to prevent scoring of valve guides. Remove the valves and place them in a board with numbered holes so they can be replaced in the same valve port from which they were removed.

VALVES, GRIND

All Engines

Clean the valves with a wire wheel brush, making sure that all carbon is removed from the top and bottom of the heads as well as the gum which might have accumulated on the stems.

In refacing valves, take off only the minimum of metal required to clean up the valve faces. If the outer edge of the valve becomes too thin or sharp due to excessive grinding, the valve must be replaced. In other words, the valve head margin must be at least $\frac{3}{64}$", otherwise the valve must be replaced. This margin is the area above the contact surface of the valve face.

Inspect the valve seats in the block or head for cracks, burns, pitting, ridges or improper angle. During any general engine overhaul, it is advisable to reface the valve seats regardless of their condition. If new valve guides are required, they must be installed and reamed before refacing the seats if the equipment used for refacing the seats has a valve guide pilot.

The valve seat width after refacing should be a liberal $\frac{1}{16}$" for intake seats but not more than $\frac{3}{32}$" in any case. The width of exhaust seats should be $\frac{3}{64}$" to a liberal $\frac{1}{16}$".

A simple check can be made to prove the fit of the valve in the valve seats by spreading a thin film of Prussian Blue on the valve face and inserting the valve in the valve seat. With hand pressure, rotate the valve ¼ turn, remove it and observe the transfer of Prussian Blue to the valve seat. An uneven transfer will indicate an inaccurate valve and valve seat refacing operation.

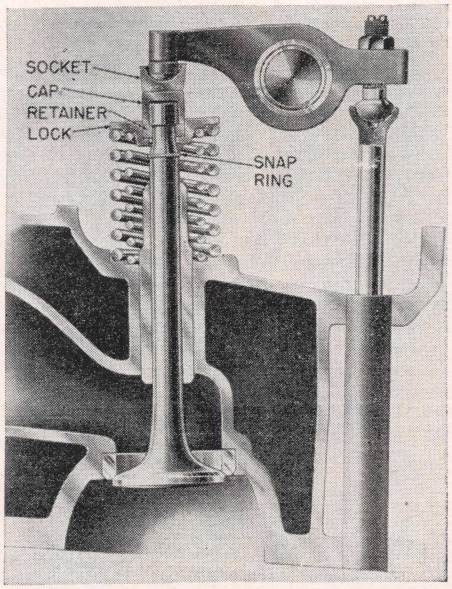

Fig. 3 Details of "Roto Valve" mechanism used on 46B, 46BD, 48B and 48BD engines

VALVE ROTATORS

Overhead Valve Engines

Increased exhaust valve service in these engines is accomplished by the use of "Roto Valve" mechanism, Fig. 3, which is a special valve spring retainer and cap located on the end of the valve stem.

In operation, the rocker arm striking the cap lifts the retainer first, thus taking the spring load off the valve before lifting it from its seat. When the valve is in the raised position, it is free to rotate due to the vibration of the system.

When checking valve clearances, the feeler gauge is placed between the cap and socket as there is no other flat surface in the valve train.

VALVE SEAT INSERTS

All Engines

Since these inserts are too hard to reface by ordinary hand grinding methods, a high speed grinder or special lapping equipment should be used to perform this operation. When using this equipment, be sure valve guides are clean and the valve guide pilot is a snug fit in order to assure a concentric finish. Finished seats should be checked with a dial indicator and runout should not exceed .001".

To remove an insert (if a suitable puller is not available), drill two holes at opposite sides of the insert but not all the way through. Then cut through the undrilled portion with a sharp chisel and remove the two pieces.

To install a new insert, first remove all burrs and sharp edges from the seat recess. Then chill the new insert with "dry ice" to obtain maximum contraction of the metal and place it in the recess. If necessary, the insert may be pounded in by using a round driver the same size as the insert and pounding on same with a hammer.

If a standard insert is too loose, an oversize insert should be used. Oversize inserts are $\frac{1}{16}$" larger than the standard and, therefore, the recess should be bored out $\frac{1}{16}$" to accommodate the oversize insert.

When installed, peen the block or head around the insert bore to insure it remaining in place.

VALVE SPRINGS

All Engines

After removing the valve springs, wash them with gasoline or other suitable solvent. Examine the springs for damage or corrosion due to acid etching, which will develop into surface cracks and cause spring failure.

Check the valve spring tension on a spring testing fixture if one is available. If a fixture is not available, at least check the free length of each spring by standing it alongside a new spring. Any spring that does not conform to the pressure specifications given in the *Tune Up & Valve Specifications* table within 10% should be replaced. Likewise, any spring that stands shorter than the new spring used for comparison should be discarded. Of course, cocked springs should be scrapped.

VALVE GUIDES, REPLACE

All Engines

Clean the valve guides with a wire guide brush and check the clearance between the valve stems and guides. Excessive clearance will cause improper seating and burned valves. When there is too much clearance between intake valve stems and guides, there is a tendency to draw oil vapor through the guide on the suction stroke, causing excessive oil consumption, fouled spark plugs and poor low speed performance.

To check valve stem-to-guide clearance, take a new valve and place it in each valve guide and feel the clearance by moving the valve stem back and

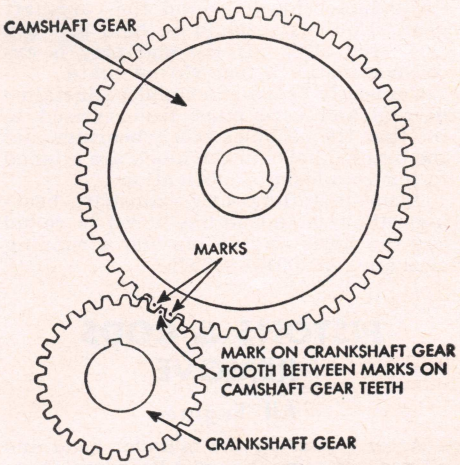

Fig. 4 Valve timing marks. All engines

forth. If this check shows excessive clearance, it will be necessary to replace the valve guide.

If the clearance is not excessive when checking with a new valve but is excessive when checked with the old valve, the old valve stem is worn and a new valve must be installed.

Valve stem-to-guide clearance may also be checked with a dial indicator or with plug gauges.

Valve guides may be removed and installed with a suitable puller and installer made for the purpose. If such equipment is not available, the old guides can be driven out or they can be pulled out by using a piece of pipe together with a long bolt and suitable washers.

After the new guides have been installed, they should be reamed to round out the holes and to provide adequate operating clearances.

VALVE LIFTERS

All Engines

Valve lifters of the mushroom type are used in overhead valve engines, whereas barrel type lifters are used in L-head engines.

If a lifter face scores from too close an adjustment, or if breakage results, replace the defective unit with a new one.

TIMING GEARS

All Engines

For correct valve timing, timing gears should be assembled as shown in Fig. 4. Always use suitable puller and pusher equipment when servicing gears. This is particularly important in the case of the camshaft gear as there is danger of loosening the welch plug in back of the camshaft if the gear is driven on with hammer blows.

CAMSHAFT & BEARINGS

All Engines

Camshaft end play is controlled by a thrust plate bolted to the front face of the cylinder block behind the camshaft gear. End play should be held between .004″ and .008″. If the end play is excessive, install a new thrust plate.

Camshaft bearings should be installed in sets and care must be exercised to see that the oil holes in the bearings and the oil feed holes in the block are aligned to insure adequate lubrication.

After installing new camshaft bearings, they should be line-bored to round out the holes and to provide a running clearance of .0015-.0025″.

PISTONS & RODS, REMOVE

All Engines

After removing the cylinder head and oil pan, examine the cylinder bores above the ring travel area. If the bores are worn so that a ridge exists at this point, remove the ridge with a ridge reamer to avoid damaging rings or cracking ring lands of pistons during removal.

Before removing pistons, mark the pistons with a file on the inside of the skirt to indicate the bore from which each piston was removed and also its position in the bore with relation to the camshaft side of the engine. Connecting rods should also be suitably marked if they are not marked already.

Remove the connecting rod caps and push the assemblies out of the cylinders, using care to prevent rod bolts from nicking crankshaft journals. It is advisable to install caps on rods as they are removed to avoid mixing parts.

PISTONS & RODS, ASSEMBLE

All Engines

If the pistons and rods have factory markings to indicate their position in the cylinders, assemble and install them according to these marks, or according to the marks made during removal if they were not otherwise marked.

PISTONS, REPLACE

All Engines

Before a honing or boring operation is started, measure all new pistons with a micrometer at points 90 degrees away from the piston pin. Then select the smallest piston for the first fitting. The slight variation usually found between pistons in a set may provide for correction in case the first piston is fitted too free.

It is important that refinished cylinder bores are trued up to have not more than .0005″ out-of-round or taper. Each bore must be final honed to remove all stone or cutter marks and provide a smooth surface. During final honing, each piston must be fitted individually to the bore in which it will be installed and should be marked to insure correct installation.

After final honing and before the piston is checked for fit, each bore must be thoroughly washed to remove all traces of abrasive and then dried thoroughly. The dry bore should then be brushed clean with a power-driven fibre brush.

Both the piston and cylinder block must be at room temperature (70°) when the piston is checked for fit in the bore. Therefore, the cylinder should be allowed to cool after boring or honing and before the piston fit is checked. This is important because a difference of 10° between the temperature of parts is sufficient to produce a variation of .0005″.

With the piston rings and pin removed and cylinder wall and piston dry and clean, insert the piston upside down in the bore. Use a feeler ½″ wide which is long enough to extend the full length of the piston. The thickness of the feeler should be the same as the clearance given in the *Pistons, Rings & Bearings* table. With the feeler hooked to a spring scale, a pull of 5 to 10 lbs. should be required to pull the feeler past the piston.

PISTON RINGS, REPLACE

All Engines

When new rings are to be installed without reboring cylinders, the glazed cylinder walls should be slightly dulled but without increasing the diameter of the bore. This is done with a "Glazebuster" or a hone equipped with the finest grade of stones.

New rings must be checked for clearance in piston grooves and for gap in cylinder bores. The latter operation must be measured with the ring about two inches from the bottom of the cylinder bore to which it is to be fitted. Cylinder bores and piston grooves must be clean, dry and free from carbon and burrs.

Check the clearance of each ring in its piston groove by installing the ring and then inserting feeler gauges *under* the ring. Any wear that occurs in the piston groove forms a step or ridge at the inner portion of the lower land. If gauges are inserted above the ring, the ring may rest on the step instead of on the worn portion of the lower land and a false measurement of clearance will result.

If the piston grooves have worn to the extent that relatively high steps or ridges exist on the lower lands, the piston should be replaced because the steps will interfere with the operation of the new rings and ring clearances will be excessive. Piston rings are not furnished in oversize widths to compensate for ring groove wear.

PISTON PINS, REPLACE

All Engines

To fit a pin in an aluminum piston, heat the piston in a pail of boiling water for several minutes. Then remove the piston and quickly insert the pin. A good fit is one which requires a light push of the thumb to insert the pin.

For 38B engines with cast iron pistons, a good fit is one which requires a light push with the palm of the hand to insert the pin with both parts at normal room temperature.

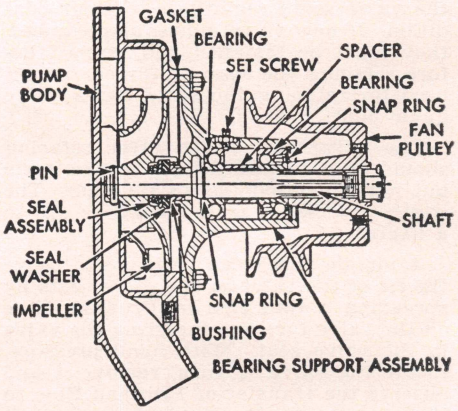

Fig. 5 Typical ball bearing type water pump

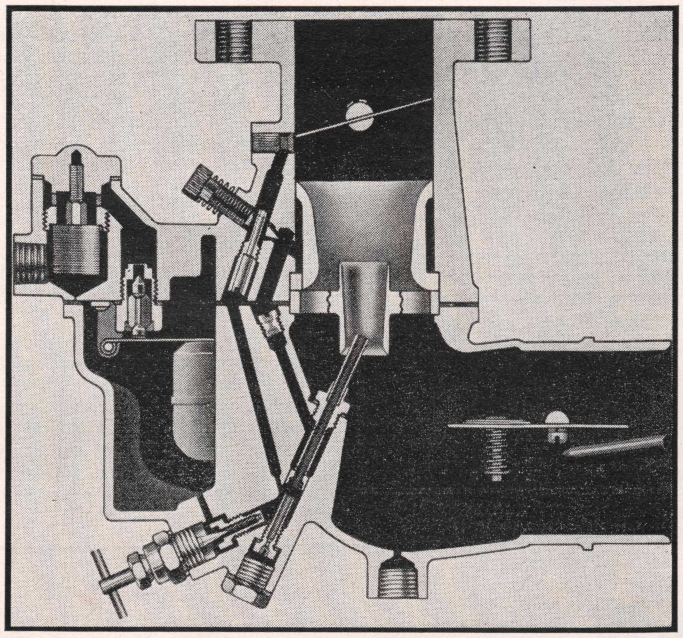

Fig. 6 Zenith 63 Series carburetor

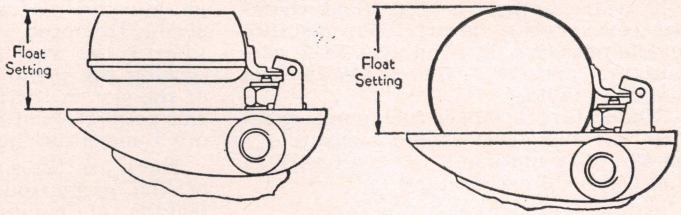

Fig. 7 Float setting. Zenith 63 Series carburetor

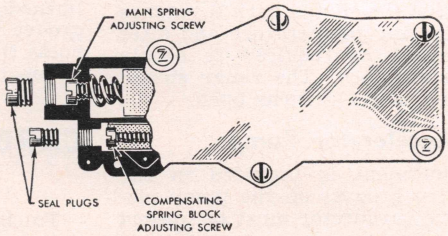

Fig. 8 Zenith governor adjustments

ROD BEARINGS, REPLACE

All Engines

Rod bearings consist of two half shells. When the bearings are placed in the rod and cap the ends extend slightly beyond the parting faces so that when the rod bolts are tightened, the bearings will be clamped tightly in place to insure positive seating and prevent turning. *The ends of these bearings must never be filed flush with the parting surface of the rod and cap for the above reasons.*

Service bearings are provided in standard sizes and several undersizes, including undersizes for reground crankshafts.

After installing new bearings, the oil clearance may be checked with Plastigage which is available at any auto parts jobber. Full instructions for its use are furnished with the envelope in which it is contained.

MAIN BEARINGS, REPLACE

All Engines

Main bearings are the insert type, requiring no reaming or scraping. They may be removed and replaced without removing the crankshaft.

Plastigage may be used to check bearing clearance and instructions for its use are contained in the package.

CRANKSHAFT END PLAY, ADJUST

All Engines

End play of the crankshaft is regulated by a removable collar just to the rear of the crankshaft timing gear. There is a shim pack between the collar and the front main bearing. Excessive clearance may be reduced by removing the right number of shims.

Crankshaft end play limits are .004-.008" on L-head engines and from .005-.010" on overhead valve engines.

OIL PUMP REPAIRS

All Engines

Conventional gear type oil pumps, located in the crankcase, are used on all engines. After removing the oil pan, the pump may be unfastened from its mounting and disassembled for repairs.

Inspect the pump gears for nicks or burrs. Inspect the bottom cover for wear and dress down on a surface plate with emery if necessary. Place the bottom cover on the pump and check the drive shaft end play. If end play is excessive (more than .006"), replace the drive and idler gears.

WATER PUMP REPAIRS

All Engines

The water pumps used on these engines are of the ball bearing type with sealing accomplished by a non-adjustable spring-loaded seal, Fig. 5. In servicing these pumps, note carefully the arrangement of the seal parts as they are removed so that the new seal may be assembled correctly.

After disassembly, inspect the face of the pump body against which the sealing washer turns. Surface should be smooth and free from scores. Reface if necessary. Discard the pump impeller if it is corroded or loose on the shaft.

IGNITION TIMING

If a timing light is to be used to set ignition timing, disconnect the vacuum advance pipe to the carburetor and place a piece of tape over open end of pipe. *This is important as carburetor trouble can affect timing adjustments.*

Lacking a power timing light, an accurate method of setting ignition timing with the engine stopped is with the aid of a jumper light. Be sure to use a light bulb that corresponds with the system voltage of the vehicle.

1. Remove distributor cap and rotor and see that the breaker gap is set according to specifications.
2. Rotate engine until No. 1 cylinder is at the ignition timing point as indicated by the timing pointer and timing mark being lined up with each other.
3. Connect the jumper light between distributor ignition terminal and ground.
4. Turn on ignition switch.
5. Loosen distributor and turn it in the direction of normal rotation until the points just close (light out). Then slowly turn distributor in the opposite direction just to the exact point that the light goes on. Tighten distributor in this position.

CARBURETOR, ADJUST

Zenith 63 Series

Zenith 63AW-12, 63AW-14 and 63AW-16 models are used on these engines, Fig. 6. They are single barrel, updraft carburetors with a manifold vacuum-controlled power and accelerating system. A removable venturi tube measures the volume of air which passes through the carburetor.

Float Setting

Float height setting is measured from the gasket surface or parting line of the float chamber cover to the bottom of the float at the center, Fig. 7, with the fuel

inlet valve seated (holding float chamber cover upside down). This distance should measure $1\frac{19}{32}''$ on 63AW-12 carburetors and $2\frac{1}{64}''$ for 63AW-14 and 63AW-16 units.

Under three pounds fuel pump pressure the fuel level should measure $\frac{55}{64}''$ on 63AW-12 units and $1\frac{3}{64}''$ on 63AW-14 and 63AW-16 carburetors.

Idle Mixture

For a preliminary adjustment, turn the needle into its seat and open one full turn. Run the engine until it reaches normal operating temperature and alter the adjustment as required to obtain smooth performance. The range should be between 1 and 1½ turns open.

Accelerator Pump

This adjustment is provided in the form of three grooves on the pump piston rod. The carburetor must be opened up and the vacuum pump piston assembly removed. Compress the spring toward the vacuum piston to permit moving the pump rod to the outer end of the slot in the pump piston base. At this point the slot is wide enough to permit removal of the rod.

There are three grooves near the end of the pump rod providing for three lengths of pump stroke. Install the pump piston in the groove nearest the end of the rod to obtain minimum or a half stroke; in the center groove for intermediate stroke, and in the third groove for maximum stroke. The spring holds the rod in the center of the pump piston base.

CARBURETOR GOVERNOR

Zenith

To change the governed speed, remove the seal wire and large seal plug, Fig. 8. Turn the main adjusting screw clockwise to increase or counter-clockwise to decrease governed speed. If the governor does not show definite response to changes of ¼ to 1 full turn of the adjusting screw, it indicates a defective governor.

If the governor "surges" or "hunts" to a higher or lower engine speed, remove the small seal plug and turn the compensating spring adusting screw ¼ turn counter-clockwise until the surge is overcome.

If the governor does not respond quickly enough when governed speed is approached and the action "lags" or is "flat", turn the compensating adjusting screw clockwise until the symptom is overcome. Do not turn the adjustment more than ½ turn at a time without checking the performance of the vehicle on the road.

Clutch

LIPE-ROLLWAY TYPE ML

This clutch, Fig. 1, is a single plate, dry disc type in which pressure on the driven disc is provided by a heavy spiral spring acting through 20 interlocked levers.

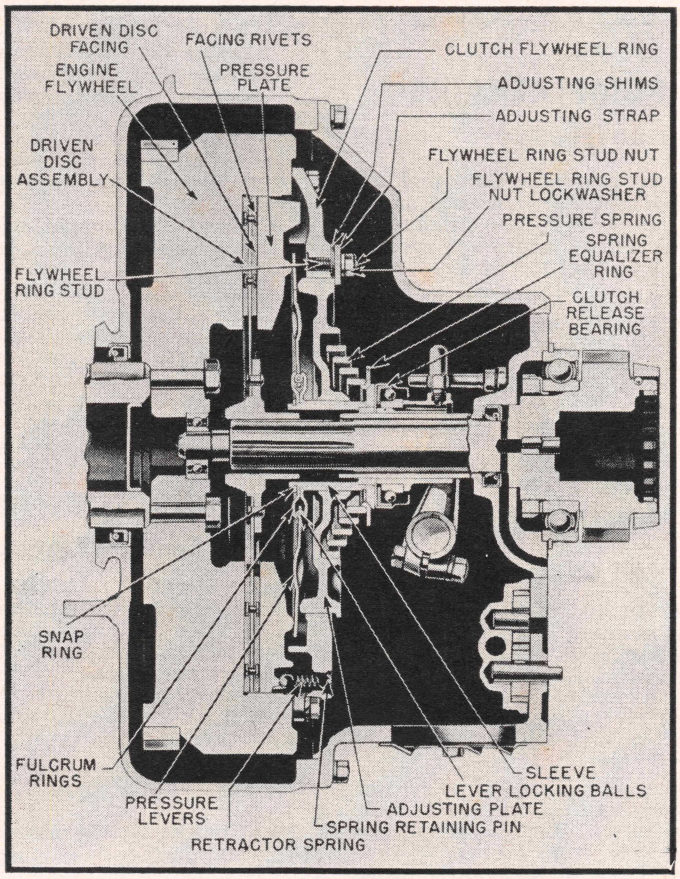

Fig. 1 Lipe-Rollway Type ML multiple lever clutch

Clutch Adjustment

The original setting of the clutch provides for 1½" free movement of the clutch pedal. As the facings wear the clutch sleeve moves toward the clutch release bearing, reducing the clearance and automatically cutting down on the free travel of the clutch pedal. When this travel drops to about ½", the clutch should be readjusted.

Never wait for the clutch to start slipping before adjusting it. It may then be too late to make an adjustment. Clutch facings quickly disintegrate once they become burned through slippage, and both the facings and pressure plate are short lived thereafter.

Do not adjust the clutch pedal linkage until the clutch has been adjusted to the correct Dimension "A", Fig. 2. The correct Dimension "A" for the clutches used are as follows. *Clutches may be identified by the manufacturer's number stamped on a name plate or on the cover or flywheel ring.*

Clutch No.	Dimension "A"	Shims Req. ①
130-1-320	$1\frac{1}{16}''$	6
130-1-029	$2\frac{1}{8}''$	6
130-1-319	$1\frac{1}{16}''$	6
140-1-293	$1\frac{1}{8}''$	6
140-1-308	$1\frac{5}{16}''$	6
140-1-332	$1\frac{5}{16}''$	7
140-1-509	$1\frac{3}{8}''$	7 or 8
150-1-295	$1\frac{3}{16}''$	7
150-1-301	$1\frac{3}{16}''$	7
150-1-465	$1\frac{3}{16}''$	7
150-1-466	$1\frac{3}{16}''$	8

①Removal of one shim .015" thick is equivalent to reducing Dimension "A" by $\frac{3}{32}''$. The number of shims listed for each clutch should be placed under each strap when overhauling the clutch.

1. To adjust the clutch, block the clutch pedal in the depressed position. This is important, otherwise the straps and studs may become bent.
2. Back off adjusting nuts five full turns.
3. Remove pedal block. This will allow the adjusting plate to move out of contact with the adjusting shims.
4. Remove a sufficient number of shims to obtain Dimension "A". It

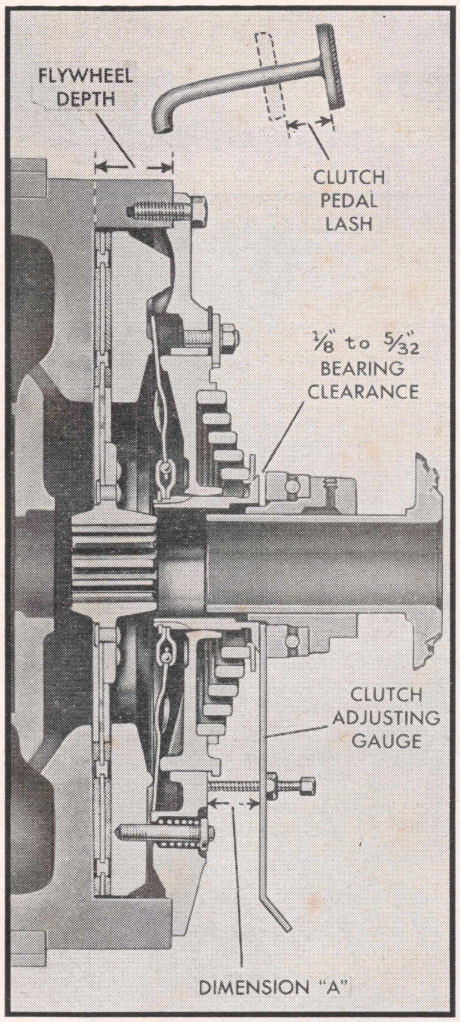

Fig. 2 Adjusting points on Lipe-Rollway Type ML clutch

is usually sufficient to remove only one shim from each stud, Fig. 3, then checking Dimension "A" before removing more. *Be sure no portion of the shim is torn and remains under the flange of the adjusting plate and that an equal number of shims remain under each strap.*

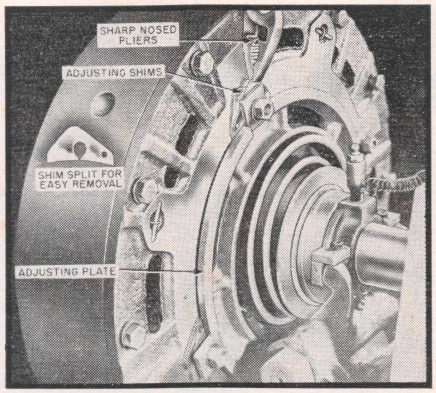

Fig. 3 Removing shims to establish Dimension "A"

5. Reblock the clutch pedal. This moves the adjusting plate into contact with the adjusting shims. Then tighten each adjusting strap nut firmly.
6. Recheck Dimension "A".
7. After the correct Dimension "A" has been established, adjust the vehicle clutch release linkage so as to obtain proper release bearing clearance or 1/8" to 5/32" as indicated in Fig. 4.

Clutch Driven Disc, Replace

1. After removing the transmission remove the cap screws holding the clutch to the flywheel and remove the clutch and driven disc.
2. Remove the flywheel ring stud nuts and adjusting straps one at a time and place the correct number of shims (see table above) under each strap.
3. Examine flywheel, making sure friction face is clean, smooth and dry.
4. Check release bearing and pilot bearing to make sure they are in good condition. Both these bearings are factory sealed and require no further lubrication.
5. Install a new driven disc and bolt the clutch to the flywheel, using a spare splined shaft to align the disc. When bolting the flywheel, screw in each bolt until it just contacts the cover plate, then gradually tighten alternate bolts until the clutch is drawn up evenly against the flywheel. Tighten remaining clutch-to-flywheel bolts.
6. After clutch is installed, check for proper release. Adjust clutch and pedal linkage as outlined above.

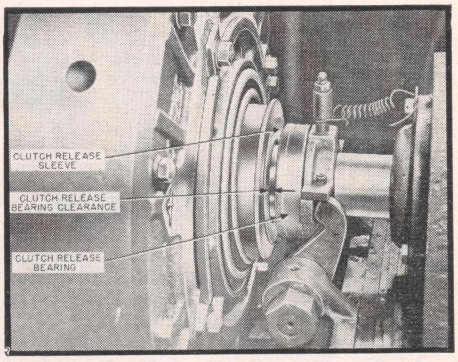

Fig. 4 Checking clearance between clutch release bearing and sleeve. Clearance should be 1/8" to 5/32" and is obtained by adjusting vehicle clutch linkage

Pressure Plate, Replace

A pressure plate dished in excess of .015" or badly scored should be replaced with a new part. After removing the transmission and the clutch from the flywheel, proceed as follows:

1. Place clutch on arbor press with pressure plate down and compress spring as far as possible.
2. Remove four retractor springs after first removing pins.
3. Slowly release arbor press, allowing clutch spring to return to normal position.
4. Holding clutch assembly together by hand, turn it over and carefully lift off pressure plate.
5. Install new pressure plate, turn clutch assembly over and compress in arbor press.
6. See that retractor springs are in place and install pins.
7. Remove clutch from press and reinstall on flywheel.

Transmissions & Rear Axles

For Clark, Fuller, New Process, Spicer and Warner Transmissions used on Brockway trucks, see the "name" chapters for service procedures and lubricant capacities.

For Eaton and Timken (Rockwell-Standard) driving axles used on Brockway trucks, see the "name" chapters for service procedures and lubricant capacities.

Steering Gear Section

ROSS CAM & LEVER

This steering gear, Fig. 1, is the cam and twin lever type in which the cam is mounted on ball bearings and the lever shaft turns on steel backed bronze bushings.

As the cam is turned by the wheel tube, the follower studs are pulled along the cam groove causing the lever arm to rotate the lever shaft. As an aid to easy steering the lever shaft studs which engage the cam are mounted on tapered roller bearings. The groove in the cam is cut shallower in the straight-ahead driving position to provide closer adjustment between the studs and the cam where most of the steering action occurs.

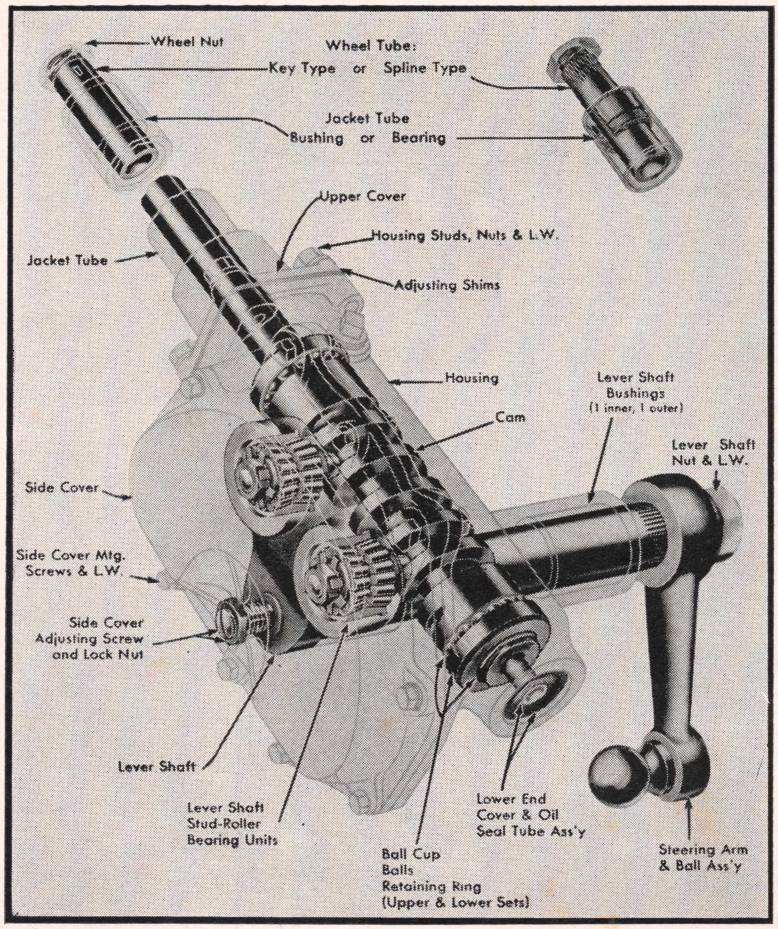

Fig. 1 Ross cam and lever twin lever mounted steering gear

Cam End Play, Adjust

1. Free the steering gear of all load by disconnecting the drag link and loosening the steering column braces.
2. Loosen the lock nut and adjusting screw in the side cover to free the studs in the cam groove.
3. Remove the upper cover stud nuts and raise the housing upper cover to permit removal of the adjusting shims, which are .002″, .003″ and .010″ thickness.
4. Clip and remove one thin shim, tighten down the cover and check the adjustment. There should be a slight drag but the steering wheel should turn freely with the thumb and forefinger lightly gripping the rim. If necessary, remove or replace shims until the adjustment is correct.

Lever Shaft Backlash, Adjust

1. Centralize the steering gear by turning the wheel all the way to the right. Then starting from this point count the number of turns required to reach end of travel to the left. Turn the wheel back half this number of turns to the mid-position.
2. Tighten the side cover adjusting screw until a very slight drag is felt through the mid-position when turning the steering wheel slowly from one side to the other. The gear should not bind in any position but a slight drag should be felt in the mid-position only.
3. After proper adjustment is secured, tighten lock nut and give the gear a final check for binding.

Stud Roller Bearing, Adjust

In most cases the foregoing adjustments will be adequate but it is sometimes necessary to adjust the stud roller bearing units as they should be preloaded at all times. A heavy drag should be felt when revolving the studs by hand. If a torque wrench is available the bearings should be adjusted so that the torque required to revolve the stud is as follows:

Lever Shaft Dia.	Torque, In. lb.
1⅜″	3-4
1½″	3-4
1⅝″	4-8
1¾″	5-11

1. To adjust, remove lever shaft from housing, wash the bearings in solvent and blow dry with compressed air, using care not to spin the bearings. Lubricate the bearings with light oil.
2. Straighten out the prong of the locking washer to release the stud nut. Remove the nut and install a new locking washer.
3. While holding the stud nut from turning with a spanner wrench on the locking washer, tighten the nut as required to revolve the stud in accordance with the table above.
4. When proper adjustment has been secured, bend the prong of the washer against a side of the nut to keep it from turning.
5. Lubricate the bearings with gear oil and assemble the lever shaft in the steering gear housing.

CHEVROLET

INDEX OF SERVICE OPERATIONS

PAGE NO.

AXLES, DRIVING

Chevrolet Axles 398
Eaton Axle Service 176
Front Wheel Drive 405
Locking Differentials 169
Timken Axle Service 209

BRAKES

Adjustments 252
Air Brake System 259
Hydraulic Brake System 250
Vacuum Brake Boosters 268

CLUTCH 385

COOLING SYSTEM

Cooling System Capacity 360
Radiator, Replace 380
Water Pump Repairs 380

ELECTRIC SYSTEM

Alternators & Regulators 37
Alternator & Regulator Specifications 362
Dash Gauge Service 93
Distributor Specifications 366
Distributor Service 7
Generator Specifications 367
Generator & Regulator Service 27
Ignition, Transistorized 22
Ignition Timing 381
Starting Motor Specificatioins 365
Starting Motor Service 65
Starter Switch Service 85

PAGE NO.

ENGINE

Camshaft, Replace 376
Crankshaft Bearing Specifications 364
Crankshaft Rear Oil Seal 379
Cylinder Head, Replace 368
Engine, Replace 368
Main Bearings, Replace 378
Piston Pins, Replace 377
Piston Rings, Replace 377
Piston & Ring Specifications 364
Pistons & Rods, Remove 376
Piston & Rod, Assemble 376
Pistons, Replace 377
Push Rods 371
Rocker Arm Service 371
Rocker Arm Stud 371
Rod Bearings, Replace 377
Timing Case Cover, Replace 374
Timing Chain or Gears, Replace 375
Valves, Adjust 370
Valve Arrangement 370
Valves, Grind 372
Valve Guides 373
Valve Lifters 374
Valves, Remove 372
Valve Spring Installed Height 373
Valve Spring Testing 373
Valve Specifications 364
Valve Stems, Grinding 373

ENGINE OILING

Crankcase Capacity 360
Crankcase Ventilation 6
Oil Pan, Replace 379
Oil Pump Repairs 379

FRONT SUSPENSION 409

PAGE NO.

FUEL SYSTEM

Carburetor Adjustments 382
Carburetor Governors 384
Carburetor Service Notes 382
Crankcase Ventilation 6
Fuel Pump Service 104
L.P.G. Carburetion 109

SPECIFICATIONS

Alternator & Regulator 362
Carburetor Adjustment 382
Crankshaft & Bearing 364
Distributor 366
Engine Tightening Torque 363
Generator & Regulator 367
Piston, Pin & Ring 364
Starting Motor 365
Tune Up 364
Valve 364
Wheel Alignment 366

STEERING GEARS

Manual Gears 412
Power Gears 413

TRANSFER CASES 242

TRANSMISSIONS

Chevrolet 387
Clark 110
Fuller 122
Hydra-Matic 313
Hydra-Matic Linkage 393
New Process 135
Spicer 141
Warner 164
Powermatic 281
Powermatic Linkage 395
Powermatic, Replace 397

TUNE-UP SERVICE 2

TRUCK MODELS & ENGINE APPLICATION

IDENTIFICATION PLATE: Located inside of driver's compartment. Engine identification and other unit data on plate represents only the equipment in the vehicle when shipped from the factory.

CONVENTIONAL SERIES

Series	Year	Engine Make	Standard Engine Model	Crankcase Refill Capacity, Qts.	Cooling System Capacity, Qts.
C10	1960	Own	6–235	5	17¼
C10	1960	Own	V8–283	4	17¾
C20	1960	Own	6–235	5	17¼
C20	1960	Own	V8–283	4	17¾
C30	1960	Own	6–235	5	17¼
C30	1960	Own	V8–283	4	17¾
C40	1960	Own	6–235	5	17¾
C40	1960	Own	V8–283	4	18¼
C50	1960	Own	6–235	5	17¼
C50	1960	Own	V8–283	4	18¼
C60	1960	Own	6–261	5	17¼
C60	1960	Own	V8–283	4	18¼
C70	1960	Own	V8–348	6	29¾
C80	1960	Own	V8–348	6	29¾
3100	1956–59	Own	6–235	5	17
3100	1954–55	Own	6–235	5	16
3100	1952–53	Own	6–216	5	15
3200	1956–59	Own	6–235	5	17
3600	1956–59	Own	6–235	5	17
3600	1954–55	Own	6–235	5	16
3600	1952–53	Own	6–216	5	15
3800	1956–59	Own	6–235	5	17
3800	1954–55	Own	6–235	5	16
3800	1952–53	Own	6–216	5	15
6100	1957–59	Own	6–261	5	17
6100	1954–56	Own	6–235	5	18
6100	1952–53	Own	6–235	5	17½
6100S	1957–59	Own	6–261	5	17
6100S	1954–56	Own	6–235	5	18
6100S	1952–53	Own	6–235	5	17½
6300	1959	Own	6–261	5	17
6400	1957–59	Own	6–261	5	18
6400	1954–56	Own	6–235	5	18
6400	1952–53	Own	6–235	5	17½
6400S	1957–59	Own	6–261	5	18
6400S	1954–56	Own	6–235	5	18
6400S	1952–53	Own	6–235	5	17½
6500	1957–59	Own	6–261	5	18
6500	1954–56	Own	6–235	5	18
6500	1952–53	Own	6–235	5	17
6500S	1957–59	Own	6–261	5	18
6500S	1954–56	Own	6–235	5	18
6500S	1952–53	Own	6–235	5	17
6703	1958–59	Own	6–261	5	17
6703S	1958–59	Own	6–261	5	17
8100	1957–59	Own	V8–283	4	23
8100	1956	Own	V8–265	5	23
8200	1957–59	Own	V8–283	4	23
8200	1956	Own	V8–265	5	23
8400	1957–59	Own	V8–283	4	23
8400	1956	Own	V8–265	5	23
8500	1957–59	Own	V8–283	4	23
8500	1956	Own	V8–265	5	23
8700	1957–59	Own	V8–283	4	23
8700	1956	Own	V8–265	5	23
10100	1958–59	Own	V8–348	6	29
10100	1956–57	Own	V8–322	6	21½
10200	1958–59	Own	V8–348	6	29
10200	1956–57	Own	V8–322	6	21½
10400	1958–59	Own	V8–348	6	29
10400	1956–57	Own	V8–322	6	21½
10500	1958–59	Own	V8–348	6	29
10500	1956–57	Own	V8–322	6	21½
10700	1958–59	Own	V8–348	6	29
10700	1956–57	Own	V8–322	6	21½

FOUR-WHEEL DRIVE SERIES

Series	Year	Engine Make	Standard Engine Model	Crankcase Refill Capacity, Qts.	Cooling System Capacity, Qts.
K10	1960	Own	6–235	5	17¼
K10	1960	Own	V8–283	4	17¾
K20	1960	Own	6–235	5	17¼
K20	1960	Own	V8–283	4	17¾
K1403	1961	Own	6–235	5	17
K1404	1961	Own	6–235	5	17
K1405	1961	Own	6–235	5	17
K1406	1961	Own	6–235	5	17
K1416	1961	Own	6–235	5	17
K1434	1961	Own	6–235	5	17
K1503	1961	Own	6–235	5	17
K1504	1961	Own	6–235	5	17
K1534	1961	Own	6–235	5	17
K2503	1961	Own	6–235	5	17
K2504	1961	Own	6–235	5	17
K2534	1961	Own	6–235	5	17
3100	1958–59	Own	6–235	5	17
3600	1958–59	Own	6–235	5	17
3800	1958–59	Own	6–235	5	17

LOW CAB FORWARD SERIES

Series	Year	Engine Make	Standard Engine Model	Crankcase Refill Capacity, Qts.	Cooling System Capacity, Qts.
L50	1960	Own	6–235	5	17¼
L50	1960	Own	V8–283	4	18¼
L60	1960	Own	6–261	5	17¼
L60	1960	Own	V8–283	4	18¼
L70	1960	Own	V8–348	6	29¾
L80	1960	Own	V8–348	6	29¾
5100	1957–59	Own	V8–283	4	18½
5100	1955–56	Own	V8–265	5	18
5100	1952–54	Own	6–235	5	18
5100S, H	1957–59	Own	V8–283	4	18½
5100S, H	1955–56	Own	V8–265	5	18
5100S	1952–54	Own	6–235	5	18
5300	1958–59	Own	V8–283	4	18½
5300S, H	1958–59	Own	V8–283	4	18½
5400	1957–59	Own	V8–283	4	18½
5400	1955–56	Own	V8–265	5	18
5400	1952–54	Own	6–235	5	18
5400S, H	1957–59	Own	V8–283	4	18½
5400S, H	1955–56	Own	V8–265	5	18
5400S	1952–54	Own	6–235	5	18

TRUCK MODELS & ENGINE APPLICATION continued

Series	Year	Engine Make	Standard Engine Model	Crankcase Refill Capacity, Qts.	Cooling System Capacity, Qts.
5700	1957–59	Own	V8–283	4	18½
5700	1955–56	Own	V8–265	5	18
5700	1952–54	Own	6–235	5	18
5700S, H	1957–59	Own	V8–283	4	18½
5700S, H	1955–56	Own	V8–265	5	18
5700S, H	1952–54	Own	6–235	5	18
7100	1957–59	Own	V8–283	4	23
7100	1956	Own	V8–265	5	23
7200	1957–59	Own	V8–283	4	23
7200	1956	Own	V8–265	5	23
7700	1957–59	Own	V8–283	4	23
7700	1956	Own	V8–265	5	23
9100	1958–59	Own	V8–348	6	29
9100	1956–57	Own	V8–322	6	21½
9200	1958–59	Own	V8–348	6	29
9200	1956–57	Own	V8–322	6	21½
9700	1958–59	Own	V8–348	6	29
9700	1956–57	Own	V8–322	6	21½

TANDEM SERIES

M70	1960	Own	V8–348	6	30
M70	1961	Own	V8-348	6	31
M80	1962–63	Own	V8-348	6	30
8400	1957–59	Own	V8–283	4	23
8400	1956	Own	V8–265	5	23
8500	1957–59	Own	V8–283	4	23
8500	1956	Own	V8–265	5	23
8700	1957–59	Own	V8–283	4	23
8700	1956	Own	V8–265	5	23
10400	1958–59	Own	V8-348	6	29
10400	1956–57	Own	V8–322	6	21½
10500	1958–59	Own	V8–348	6	29
10500	1956–57	Own	V8–322	6	21½
10700	1958–59	Own	V8–348	6	29
10700	1956–57	Own	V8–322	6	21½

STEP-VAN & FORWARD CONTROL SERIES

P20	1960–62	Own	6–235	5	17
P20	1963	Own	6–230	4	14
P30	1960–62	Own	6–235	5	17
P30	1963	Own	6–230	4	14
P1342	1962	Own	6–235	5	17
P1342	1963	Own	4–153	3½	8¼
P1345	1962	Own	6–235	5	17
3400	1955–59	Own	6–235	5	17
3500	1955–59	Own	6–235	5	17
3700	1955–59	Own	6–235	5	17
6200	1957–59	Own	6–261	5	17
6600	1957–59	Own	6–261	5	17

SCHOOL BUS SERIES

S50	1960	Own	6–235	5	17¼
S50	1960	Own	V8–283	4	18¼
S60	1960	Own	6–261	5	17¼
S60	1960	Own	V8–283	4	18¼
S70	1960	Own	V8–348	6	29¾
S5302	1961–62	Own	6–235	5	18
S5302	1963	Own	6–230	4	12
S6202	1961–62	Own	6–261	5	18
S6202	1963	Own	6–292	5	15½
S6402	1961–62	Own	6–261	5	18
S6402	1963	Own	6–292	5	15½
S6702	1961–62	Own	6–261	5	18
S6702	1963	Own	6–292	5	15½
S6702H	1963	Own	6–292	5	15½
S6902	1962	Own	V8-327	5	18½
S7702	1961	Own	V8-348	5	30
S7902	1961	Own	V8-348	6	30
4502	1954–59	Own	6–235	5	17½
4502	1952–53	Own	6–216	5	15
6702	1957–59	Own	6–261	5	17
6702	1952–56	Own	6–235	5	17
6802	1957–59	Own	6–261	5	17
6802	1952–56	Own	6–235	5	17
S6902	1963	Own	V8–327	5	15½
S6902H	1963	Own	V8–327	5	15½
8802	1957–59	Own	V8–283	4	23
8802	1956	Own	V8–265	5	23
10802	1957–59	Own	V8–322	6	21½

SEDAN DELIVERY & PICKUP

1170	1959–60	Own	6–235	5	17
1180	1959–60	Own	6–235	5	17
1270	1959–60	Own	V8–283	4	17½
1271	1958	Own	6–235	5	17
1271	1958	Own	V8–283	4	17½
1280	1959–60	Own	V8–283	4	17½
C1404	1961–62	Own	6–235	5	17
C1404	1963	Own	6–230	4	11
C1434	1961–62	Own	6–235	5	17
C1434	1963	Own	6–230	4	11
K1404	1961–63	Own	6–235	5	17
K1434	1961–63	Own	6–235	5	17
C1504	1961–62	Own	6–235	5	17
C1504	1963	Own	6–230	4	11
K1504	1961–63	Own	6–235	5	17
1508	1956–57	Own	V8–265	5	16
1508	1954–57	Own	6–235	5	16
1508	1952–53	Own	6–216	5	15
C1534	1961–62	Own	6–235	5	17
C1534	1963	Own	6–230	4	11
K1534	1961–63	Own	6–235	5	17
C2504	1961–62	Own	6–235	5	17
C2504	1963	Own	6–230	4	11
K2504	1961–63	Own	6–235	5	17
C2534	1961–62	Own	6–235	5	17
C2534	1963	Own	6–230	4	11
K2534	1961–63	Own	6–235	5	17
C3604	1961–62	Own	6–235	5	17
C3604	1963	Own	6–230	4	11

PANELS & CARRYALLS

C1405	1961–62	Own	6–235	5	17

TRUCK MODELS & ENGINE APPLICATION continued

Series	Year	Engine Make	Standard Engine Model	Crankcase Refill Capacity, Qts.	Cooling System, Capacity, Qts.
C1405	1963	Own	6-230	4	11
K1405	1961-63	Own	6-235	5	17
C1406	1961-62	Own	6-235	5	17
C1406	1963	Own	6-230	4	11
K1406	1961-63	Own	6-235	5	17
C1416	1961-62	Own	6-235	5	17
C1416	1963	Own	6-230	4	11
K1416	1961-63	Own	6-235	5	17
C3605	1961-62	Own	6-235	5	17
C3605	1963	Own	6-230	4	11
STAKE MODELS					
C2509	1961-62	Own	6-235	5	17
C2509	1963	Own	6-230	4	11
C3609	1961-62	Own	6-235	5	17
C3609	1963	Own	6-230	4	11
C4109	1961-62	Own	6-235	5	17
C4309	1961-62	Own	6-235	5	17
C5109	1961-62	Own	6-235	5	17
C5109	1963	Own	6-230	4	12
C5309	1961-62	Own	6-235	5	17
C5309	1963	Own	6-230	4	12
L5309	1961-62	Own	6-235	5	17
L5309	1963	Own	6-230	4	12
CHASSIS-CAB MODELS					
C30	1963	Own	6-230	4	11
C40	1961-62	Own	6-235	5	17
C50	1961-62	Own	6-235	5	17
C50	1963	Own	6-230	4	12
L50	1961-62	Own	6-235	5	17
L50	1963	Own	6-230	4	12
C60	1961-62	Own	6-261	5	18
C60	1963	Own	6-292	5	15½
D60	1962-63	GM	4-53	12	21½
D60-H	1962-63	GM	4-53	12	21½
L60	1961-62	Own	6-261	5	18
L60	1963	Own	6-292	5	15½
T60	1961-62	Own	6-261	5	25½
T60	1963	Own	6-292	5	23½
C60-H	1961-62	Own	6-261	5	18
C60H	1963	Own	6-292	5	15½
L60-H	1961-62	Own	6-261	5	18
L60H	1963	Own	6-292	5	15½
T60-H	1961-62	Own	6-261	5	25½
T60H	1963	Own	6-292	5	23½
C70	1961	Own	V8-348	6	30
L70	1961	Own	V8-348	6	30
T70	1961	Own	V8-348	6	37½
C80	1961-63	Own	V8-348	6	30
E80	1962	GM	6V-53	14	34½
E80	1963	GM	6V-53		34½
L80	1961-63	Own	V8-348	6	30
T80	1961-63	Own	V8-348	6	37½
U80	1962-63	GM	6V-53	14	34½
C1403	1961-62	Own	6-235	5	17
C1403	1963	Own	6-230	4	11
K1403	1961-63	Own	6-235	5	17
C1503	1961-62	Own	6-235	5	17
C1503	1963	Own	6-230	4	11
K1503	1961-63	Own	6-235	5	17
C2503	1961-62	Own	6-235	5	17
C2503	1963	Own	6-230	4	11
K2503	1961-63	Own	6-235	5	17
C3603	1961-62	Own	6-235	5	17
COWL MODELS					
C40	1961-62	Own	6-235	5	17½
C50	1961-62	Own	6-235	5	17
C50	1963	Own	6-230	4	12
C60	1961-62	Own	6-261	5	18
C60	1963	Own	6-292	5	15½
C60-H	1961-62	Own	6-261	5	18
C60H	1963	Own	6-292	5	15½
C1402	1961-62	Own	6-235	5	17
C1402	1963	Own	6-230	4	11
C1412	1961-62	Own	6-235	5	17
C1412	1963	Own	6-230	4	11
C2502	1961-62	Own	6-235	5	17
C2502	1963	Own	6-230	4	11
C2512	1961-62	Own	6-235	5	17
C2512	1963	Own	6-230	4	11
C3602	1961-62	Own	6-235	5	17
C3602	1963	Own	6-230	4	11
C3612	1961-62	Own	6-235	5	17
C3612	1963	Own	6-230	4	11

ALTERNATOR & REGULATOR SPECIFICATIONS

Year	Alternator							Regulator						
	Model	Field Current @ 80°F.		Cold Output @ 2000 R.P.M.		Cold Output @ 5000 R.P.M.		Model	Field Relay			Voltage Regulator		
		Amps.	Volts	Amps.	Volts	Amps.	Volts		Air Gap	Point Gap	Closing Voltage	Air Gap	Point Gap	Voltage @ 125°F.
1963	1100628	1.9-2.3	12	25	14	35	14	1119512	.015	.030	1.5-2.7	.057	.014	13.5-14.4
	1100629	1.9-2.3	12	28	14	40	14	1119512	.015	.030	1.5-2.7	.057	.014	13.5-14.4
	1100633	1.9-2.3	12	32	14	50	14	1119512	.015	.030	1.5-2.7	.057	.014	13.5-14.4

GENERAL ENGINE SPECIFICATIONS

Year	Engine Model	No. Cyls. & Valve Location	Bore & Stroke	Piston Displacement Cu. In.	Compression Ratio	Maximum Brake H. P. @ R. P. M.	Maximum Torque Lb. Ft. @ R. P. M.	Normal Oil Pressure, Lbs.
1952–53	216	6–In Head	3.5000 x 3.750	216	6.60	92 @ 3400	176 @ 1500	14
1952	235	6–In Head	3.5625 x 3.937	235	6.70	105 @ 3600	193 @ 2000	14
1953	235	6–In Head	3.5625 x 3.937	235	7.10	108 @ 3600	200 @ 2000	14
1954–55	235	6–In Head	3.5625 x 3.937	235	7.50	112 @ 3700	200 @ 2000	45
1956–57	235①	6–In Head	3.5625 x 3.937	235.5	8.00	140 @ 4200	210 @ 2400	45
1956–57	235②	6–In Head	3.5625 x 3.937	235.5	8.00	140 @ 4200	210 @ 2000	35
1954–55	261	6–In Head	3.7500 x 3.937	261	7.17	135 @ 3700	200 @ 2000	45
1956–57	261③	6–In Head	3.7500 x 3.937	261	7.80	148 @ 4000	232 @ 2000	45
1955	V8–265	8–In Head	3.7500 x 3.000	265	7.50	145 @ 4000	238 @ 2000	35
1956–57	V8–265④	8–In Head	3.7500 x 3.000	265	8.00	162 @ 4400	257 @ 2200	35
1956	265⑥⑦	8–In Head	3.7500 x 3.000	265	7.50	155 @ 4200	249 @ 2200	35
1956	265⑤	8–In Head	3.7500 x 3.000	265	9.25	205 @ 4600	268 @ 3000	35
1957	265⑥	8–In Head	3.7500 x 3.000	265	8.00	155 @ 4200	250 @ 2400	35
1957	283④	8–In Head	3.8750 x 3.000	283	8.50	185 @ 4600	275 @ 2400	35
1957	283⑤	8–In Head	3.8750 x 3.000	283	9.50	220 @ 4800	300 @ 3000	35
1957	283⑦	8–In Head	3.8750 x 3.000	283	8.00	160 @ 4200	270 @ 2000	35
1957	283⑧	8–In Head	3.8750 x 3.000	283	8.00	175 @ 4400	275 @ 2400	35
1956–57	322⑨	8–In Head	4.0000 x 3.200	322	7.70	195 @ 4000	310 @ 2200	35
1957	322⑩	8–In Head	4.0000 x 3.200	322	7.70	210 @ 4000	320 @ 2800	35
1958–63	235②	6-In Head	3.5625 x 3.937	235.5	8.25	135 @ 4000	217 @ 2000	30
1958–62	261③	6-In Head	3.7500 x 3.937	261	8.00	150 @ 4000	235 @ 2000	30
1958–63	283⑥	8-In Head	3.8750 x 3.000	283	8.50	160 @ 4200	275 @ 2400	30
1958–61	283⑦	8-In Head	3.8750 x 3.000	283	8.00	160 @ 4200	275 @ 2400	30
1958–59	322⑨	8-In Head	4.0000 x 3.200	322	7.70	195 @ 4000	320 @ 2800	35
1962–63	327⑦	8-In Head	4.0000 x 3.25	327	8.00	185 @ 4400	305 @ 2000	30
1958–63	348⑪	8-In Head	4.1250 x 3.250	348	7.75	220 @ 4400	325 @ 2600	35
1962–63	409⑪	8-In Head	4.3125 x 3.50	409	7.75	252 @ 4000	390 @ 2400	35
1963	4–153	4–In Head	3.8750 x 3.250	153	8.50	90 @ 4000	152 @ 2400	40–60
1963	6–230	6–In Head	3.8750 x 3.250	230	8.50	140 @ 4400	220 @ 1600	40–60
1963	6–292	6–In Head	3.8750 x 4.125	292	8.00	165 @ 3800	280 @ 1600	40–60

①—Blue Flame 140 ②—Thriftmaster ③—Jobmaster ④—Turbo-Fire ⑤—Super Turbo-Fire ⑥—Trademaster ⑦—Taskmaster ⑧—Super Taskmaster ⑨—Loadmaster ⑩—Super Loadmaster ⑪—Workmaster

ENGINE TIGHTENING SPECIFICATIONS★

★Torque specifications are for clean and lightly lubricated threads only. Dry or dirty threads produce increased friction which prevents accurate measurement of tightness.

Engine	Spark Plugs Ft. Lbs.	Cylinder Head Bolts Ft. Lbs.	Intake Manifold Ft. Lbs.	Exhaust Manifold Ft. Lbs.	Rocker Arm Shaft Bracket Ft. Lbs.	Rocker Arm Cover Ft. Lbs.	Connecting Rod Cap Bolts Ft. Lbs.	Main Bearing Cap Bolts Ft. Lbs.	Flywheel to Crankshaft Ft. Lbs.	Vibration Damper or Pulley Ft. Lbs.
4–153	20–25	90–95	①	①	None	2–4	35–45	60–70	55–65	②
6–216	20–25	①	①	①	25–30	2½	35–45	100–110	50–65	②
6–230	20–25	90–95	①	①	None	2–4	35–45	60–70	55–65	②
6–235	20–25	90–95	①	①	25–30	2½	35–45	100–110	50–65	②
6–261	20–25	90–95	①	①	25–30	2½	35–45	100–110	50–65	②
6–292	20–25	90–95	①	①	None	2–4	35–45	60–70	55–65	②
8–265	20–25	60–70	25–35	25–35	None	2½	30–35	60–70	55–65	②
8–283, 327	20–25	60–70	25–35	25–35	None	2½	30–35	60–70	55–65	②
8–322	22–28	63–73	25–30	10–15	30–35	4–5	40–45	100–110	50–55	55–65
8–348, 409	20–25	60–70	25–35	③	None	2½	35–45	95–105	55–65	②

①—Center clamp bolts 15–20 ft. lbs., end clamp bolts 25–30 ft. lbs.
②—Pressed on.
③—Center clamp bolts 25–30 ft. lbs., end clamp bolts 15–20 ft. lbs.

TUNE UP & VALVE SPECIFICATIONS

Year	Engine Model	Firing Order	Spark Plug		Dist. Point Gap	Ignition Timing		Valve Angles		Valve Lash		Valve Spring Installed Height
			Type (12)	Gap		Timing Mark	Location	Seat	Face	Intake	Exhaust	
1952	6-216	153624	(9)	.035	.022	Ball	Flywheel	(2)	(2)	.006H	(3)	1 27/32
1953	6-216	153624	(9)	.035	(4)	Ball	Flywheel	(2)	(2)	.006H	.013H	1 27/32
1953	6-235	153624	(9)	.035	(4)	Bali	Flywheel	(2)	(2)	.006H	(3)	1 27/32
1954-55	6-235	153624	(9)	.035	(4)	Ball	Flywheel	(2)	(2)	.006H	.016H	1 27/32
1954-55	6-261	153624	(9)	.035	(4)	Ball	Flywheel	(2)	(2)	.006H	.020H	1 55/64
1955	V8-265	18436572(1)	(9)	.035	(4)	4°	Damper	45	44	3/4 Turn(5)		...
1956-57	6-235	153624	(10)	.035	(4)	Ball	Flywheel	(2)	(2)	.006H	.018H	1 27/32
1956-57	V8-322	12784563(6)	(10)	.035	(4)	4°	Damper	45	45	Zero	Zero	...
1956-57	6-261	153624	(10)	.035	(4)	Ball	Flywheel	(2)	(2)	.006H	.020H	1 55/64
1956-57	V8-265	18436572(1)	(10)	.035	(4)	4°	Damper	45	44	3/4 Turn(5)		...
1957	V8-283	18436572(1)	(10)	.035	(4)	4°	Damper	46	45	3/4 Turn(5)		1 21/32
1958-59	6-235	153624	(11)	.035	(4)	Ball	Flywheel	(2)	(2)	.006H	.018H	1 55/64
1958-59	6-261	153624	(11)	.035	(4)	Ball	Flywheel	(2)	(2)	.006H	.020H	1 55/64
1958-59	V8-283	18436572(1)	(11)	.035	(4)	4°	Damper	46	45	3/4 Turn(5)		1 21/32
1958-59	V8-322	12784563(6)	C42-1	.035	(4)	4°	Damper	45	45	Hydraulic		...
1958-61	V8-348	18436572(1)	C42N	.035	(4)	4°	Damper	46	45	3/4 Turn(5)		1 5/8
1960-63	6-235	153624	C46	.035	(4)	(7)	Flywheel	(2)	(2)	.006H	.018H	1 55/64
1960-62	6-261	153624	C42-1	.035	(4)	Ball	Flywheel	(2)	(2)	.006H	.020H	1 55/64
1960-61	V8-283	18436572(1)	C46	.035	(4)	4°(8)	Damper	46	45	3/4 Turn(5)		1 21/32
1962-63	V8-283	18436572(1)	44	.035	(4)	4°(8)	Damper	46	45	1 Turn(5)		1 21/32
1962-63	V8-327	18436572(1)	42-1	.035	(4)	8°	Damper	46	45	1 Turn(5)		1 11/16
1962-63	V8-348	18436572(1)	C42N	.035	(4)	8°	Damper	46	45	1 Turn(5)		1 5/8
1962-63	V8-409	18436572(1)	C42N	.035	(4)	4°	Damper	46	45	1 Turn(5)		1 5/8
1963	4-153	1342	46N	.035	(4)	4°(13)	Damper	46	45	1 Turn(5)		1 21/32
1963	6-230	153624	46N	.035	(4)	4°(13)	Damper	46	45	1 Turn(5)		1 21/32
1963	6-292	153624	C42N	.035	(4)	4°(13)	Damper	46	46	1 Turn(5)		1 21/32

(1)—Cylinder numbering (front to rear): Left bank 1-3-5-7, right bank 2-4-6-8.
(2)—Valve seat: intake 31°, exhaust 46°. Valve face: intake 30°, exhaust 45°.
(3)—For 1/2 ton and 1 ton models .013H. For 1 1/2 and 2 ton .020H.
(4)—New points .019", used points .016".
(5)—Tighten rocker arm stud nut until all lash is eliminated, then turn stud nut the additional turns listed.
(6)—Cylinder numbering (front to rear): Right bank 1-3-5-7, left bank 2-4-6-8.
(7)—First short radial mark clockwise from timing ball.
(8)—With distributor vacuum line disconnected and opening in manifold closed.
(9)—C44 for 1/2 to 1 1/2 ton models, 43-5 for 2 ton models.
(10)—C45 for 1/2 to 1 1/2 ton models, C43 for 2 ton models.
(11)—C45 for 1/2 to 1 1/2 ton models, C42-1 for 2 ton models.
(12)—AC. Normal service.
(13)—Set timing on No. 2 cylinder for Step Van models, using timing pointer at front of oil pan. Also disconnect distributor line and plug opening.

PISTON, PIN, RING, CRANKSHAFT & BEARING SPECIFICATIONS

Year	Engine Model	Fitting Pistons		Ring End Gap(1)		Wrist-pin Diameter	Rod Bearings		Main Bearings			
		Shim To Use	Pounds Pull On Scale	Comp.	Oil		Shaft Diameter	Bearing Clearance	Shaft Diameter	Bearing Clearance	Thrust on Bear. No.	Shaft End Play
1963	4-153	.0015	7-18	.010	.015	.9271	1.999-2.000	.0007-.0028	2.2978-2.2988	(5)	5	.002-.006
1952-53	6-216	.0015	7-18	.005	.005	.8647	2.311-2.312	.001-.003	(2)	.001-.003	3	.003-.006
1963	6-230	.0015	7-18	.010	.015	.9271	1.999-2.000	.0007-.0028	2.2983-2.2993	(5)	5	.002-.006
1954-61	6-235	.0015	7-18	.007	.015	.8662	2.311-2.312	.001-.003	(2)	.001-.003	3	.003-.009
1962-63	6-235	.0015	7-18	.007	.015	.8662	2.2485-2.2515	.001-.003	(2)	.0008-.0026	3	.003-.009
1954-59	6-261	.0015	7-18	.010	.015	.9272	2.311-2.312	.001-.003	(2)	.001-.003	3	.003-.009
1960-61	6-261	.0015	7-18	(4)	.015	.9272	2.311-2.312	.001-.003	(2)	.001-.003	3	.003-.009

PISTON, PIN, RING, CRANKSHAFT & BEARING SPECIFICATIONS continued

Year	Engine Model	Fitting Pistons		Ring End Gap①		Wrist-pin Diameter	Rod Bearings		Main Bearings			
		Shim To Use	Pounds Pull On Scale	Comp.	Oil		Shaft Diameter	Bearing Clearance	Shaft Diameter	Bearing Clearance	Thrust on Bear. No.	Shaft End Play
1962	6-261	.0015	7-18	④	.015	.9272	2.2485-2.2515	.001-.003	②	.0008-.0026	3	.003-.009
1963	6-292	.0015	7-18	.010	.015	.9271	1.999-2.000	.0007-.0028	2.2983-2.2993	.0008-.0024	5	.002-.006
1955-57	V8-265	.0015	7-18	.009	.015	.9272	1.999-2.000	.001-.003	2.2978-2.2988	.001-.0035	5	.002-.006
1957-58	V8-283	.0015	7-18	.009	.015	.9272	1.999-2.000	.001-.003	2.2978-2.2988	.001-.0035	5	.002-.006
1959-61	V8-283	.0015	7-18	.010	.015	.9272	1.999-2.000	.001-.003	2.2978-2.2988	.0008-.0034	5	.002-.006
1962-63	V8-283	.0015	7-18	.010	.015	.9272	1.999-2.000	.001-.003	2.2978-2.2988	.0007-.0028	5	.002-.006
1956-59	V8-322	.003	7-13	.010	.015	.940	2.249-2.250	.0002-.0023	2.498-2.499	.0005-.003	3	.002-.006
1962-63	V8-327	.0015	7-18	.013	.015	.9272	1.999-2.000	.001-.003	2.2978-2.2988	.001-.003	5	.002-.006
1958-61	V8-348	.0015	7-18	.015	.015	.9896	2.199-2.200	.001-.003	2.498-2.499	③	5	.002-.006
1962-63	V8-348	.0015	7-18	.015	.015	.9896	2.199-2.200	.0007-.0028	2.498-2.499	.001-.003	5	.006-.016
1962-63	V8-409	.0015	7-18	.015	.015	.9896	2.1988-2.1998	.0007-.0028	2.4977-2.4987	.001-.003	5	.006-.016

①—Fit rings in tapered bores to the clearance listed in tightest portion of ring travel.
③—Rear bearing .0018-.0034″, all others .0008-.0034″.
④—Top ring .015″, second ring .010″.
⑤—Rear bearing .0008-.0024″, all others .0003-.0019″.

②—No. 1, 2.6835-2.6845″.
No. 2, 2.7145-2.7155″.
No. 3, 2.7455-2.7465″.
No. 4, 2.7765-2.7775″.

STARTING MOTOR SPECIFICATIONS

Year	Model	Starter Number	Brush Spring Tension ①	Free Speed Test			Resistance Test③		Lock Torque Test		
				Amps. ①	Volts	R.P.M. ①	Amps. ④	Volts	Amps.	Volts	Torque Ft. Lbs.
1952-54	All	1107108	24	70	5.65	5500	...	...	550	3.25	11
1955-56	6 Cyl. Hydra.	1107633	35	75	10.3	6900	...	...	435	5.8	10.5
1955-60	6 Cyl. Std. Trans.	1107634	35	75	10.3	6900	...	...	435	5.8	10.5
1955-56	Forward Control	1107626	35	75	10.3	6900	...	...	435	5.8	10.5
1955-56	V8-265 Std. Trans.	1107627	35	75	10.3	6900	...	...	435	5.8	10.5
1955-56	V8-265 Hydra.	1107643	35	75	10.3	6900	...	...	435	5.8	10.5
1956-57	V8-322	1107646	35	95	10.1	3500	...	...	470	5.4	10.5
1957-62	6 Cyl. Hydra.	1107677	35	75	10.3	6900	...	...	435	10.5	5.8
1957-60	V8-283 Std. Trans.	1107664	35	49②	10.6	6200	270	4.3	...	...	...
1957-60	V8-283 Hydra.	1107674	35	75	10.3	6900	...	...	435	10.5	5.8
1957	Allison Trans.	1107670	35	75	10.3	6900	...	...	435	10.5	5.8
1958-60	V8-348	1107686	35	65②	10.6	3600	300②	3.5	...	...	...
1958-60	Allison Trans.	1107688	35	65②	10.6	3600	300②	3.5	...	...	...
1961-62	6 Cyl. Std. Tr. & P.G.	1107888	35	49②	10.6	6200	270	4.25	...	...	...
1961-62	V8-283 Std. Tr. & P.G.	1107889	35	49②	10.6	6200	270	4.25	...	...	...
1961-63	V8-327, 348 Std. & P.G.	1107895	40	65②	10.6	3600	300②	3.5	...	...	...
1961	Allison Trans.	1107891	40	65②	10.6	3600	300②	3.5	...	...	...
1962	6 Cyl. Hydra.	1107675	35	75	10.3	6900	...	...	435	10.5	5.8
1962	Allison Trans.	1107233	40	65	10.6	3600	300	3.5	...	...	...
1962	4-53 Diesel	1113100	80	57	11.5	5000	...	...	...	...	...
1963	153, 230 283 P.G.	1107237	35	49-76②	10.6	6200	270-310②	4.3	...	...	...
	153, 230, 283 Std. Tr.	1107273	40	65-100②	10.6	3600	300-360②	3.5	...	...	...
	292 P.G.	1107242	35	65-100②	10.6	3600	300-360②	3.5	...	...	...
	292 Std. Tr.	1107274	40	65-100②	10.6	3600	300-360②	3.5	...	...	...
	409 5 Speed Tr.	1107751	35	65-100②	10.6	3600	300-360②	3.5	...	...	...
	4-53 Diesel	1113154	80	50-70②	11.5	5000	...	...	...	...	...
	6V-53 Diesel	1114101	80	90-130②	11.5	5600	...	...	...	...	...

①—Minimum ②—Includes solenoid.
③—Check capacity of motor by using a 500 ampere meter and a carbon pile rheostat to control voltage. Apply volts listed across motor with armature locked. Current should be as listed.

DISTRIBUTOR SPECIFICATIONS

Year	Model	Distributor Number	Rotation ①	Breaker Gap	Dwell Angle Deg.	Breaker Arm Spring Tension	Centrifugal Advance Degrees @ R.P.M. of Distributor		Vacuum Advance	
							Advance Starts	Full Advance	Inches of Vacuum To Start Plunger	Max. Adv. Dist. Deg. @ Vacuum
1963	6-230	1110280	C	②	31-34③	19-23	1 @ 450	15 @ 1500	5-7	11½
1963	4-153	1110292	C	②	31-34③	19-23	2 @ 400	14 @ 1850	5-7	11½
1963	6-292	1110302	C	②	31-34③	19-23	2 @ 400	14 @ 1850	6-8	11½
1955-56	V8-265	1110847	C	②	26-33	19-23	1 @ 400	16 @ 1800	5-7	14 @ 14
1957	V8-265, 283	1110874	C	②	30	19-23	1 @ 400	16 @ 1800	5-7	11 @ 13
1958	V8-283	1110920	C	②	30	19-23	1 @ 300	16 @ 1875	7-9	7 @ 15
1959-62	V8-283	1110947	C	②	30	19-23	1 @ 375	14 @ 1875	7-9	16 @ 16
1963	V8-283	1111015	C	②	28-32	19-23	1 @ 450	15 @ 2000	7-9	8
1956	V8-265	1112330	C	②	26-33	19-23	1 @ 400	16 @ 1800	...	...
1956	V8-322	1112331	C	②	26-33	19-23	1 @ 400	16 @ 2000	...	...
1957	V8-322	1112343	C	②	30	19-23	1 @ 450	18 @ 2000	...	...
1957	V8-265, 283	1112349	C	②	30	19-23	1 @ 400	16 @ 1800	...	...
1957	V8-265, 283	1112350	C	②	30	19-23	1 @ 400	16 @ 1800	...	...
1952-53	6-216	1112362	C	.022	31-37	17-21	2 @ 375	18 @ 1700	7-8	10 @ 18
1952	6-235	1112363	C	.022	31-37	17-21	2 @ 375	15 @ 1850	7-8	10 @ 18
1953-55	6-235	1112388	C	②	38-45	19-23	2 @ 375	13 @ 1750	7-8	10 @ 18
1953	6-235	1112389	C	②	38-45	19-23	2 @ 350	17 @ 1800	4-6	7 @ 10
1954-55	6-261	1112392	C	②	38-45	19-23	2 @ 350	17 @ 1800	7-8	10 @ 18
1954	6-235	1112396	C	②	38-45	19-23	1 @ 375	13 @ 1750	7-8	10 @ 18
1955-62	6-235, 261	1112403	C	②	28-35	19-23	1 @ 375	13 @ 1750	4-6	7 @ 10
1955-56	6-261	1112407	C	②	28-35	19-23	1 @ 350	17 @ 1800	4-6	8 @ 10
1957	V8-322	1112702	C	②	30	19-23	1 @ 400	16 @ 2000	...	...
1958	V8-348 Manual Trans.	1112715	C	②	30	19-23	1 @ 300	13 @ 1750	...	...
1958-61	V8-283 Allison Trans.	1112720	C	②	30	19-23	1 @ 300	13 @ 1750	...	...
1958-61	V8-283 Allison Trans.	1112721	C	②	30	19-23	1 @ 300	13 @ 1750	...	...
1960-61	V8-283 Manual Trans.	1112725	C	②	30	19-23	1 @ 300	13 @ 1750	...	...
1958-61	V8-283 Manual Trans.	1112726	C	②	30	19-23	1 @ 300	13 @ 1750	...	...
1958	V8-348 Allison Trans.	1112727	C	②	30	19-23	1 @ 300	13 @ 1750	...	...
1958-61	V8-348 Manual Trans.	1112728	C	②	30	19-23	1 @ 300	12 @ 1750	...	...
1958-61	V8-348 Allison Trans.	1112729	C	②	30	19-23	1 @ 300	12 @ 1750	...	...
1961	V8-283	1112732	C	②	30	19-23	1 @ 375	13 @ 1750	...	...
1961	V8-283	1112738	C	②	30	19-23	1 @ 375	13 @ 1750	...	...
1960-62	V8-348	1112756	C	②	30	19-23	1 @ 375	12 @ 1750	...	...
1962-63	V8-327	1112765	C	②	30	19-23	1 @ 350	24 @ 2300	...	...
1962-63	V8-409	1112767	C	②	30	19-23	1 @ 300	28 @ 1850	...	...
1962	V8-348	1112769	C	②	30	19-23	1 @ 300	20 @ 1700	...	...
1963	V8-348	1112786	C	②	28-32	19-23	2 @ 425	10 @ 1700	None	None

①—As viewed from top; C, clockwise; CC, counterclockwise. ②—New points .019″, used .016″.
③—Set with vacuum line disconnected.

WHEEL ALIGNMENT SPECIFICATIONS

Model	Year	Caster, Deg.	Camber, Deg.	Toe-In, In.	Kingpin Inclination, Deg.
C14 Series	1963	+2½	+¼	3/16	...
C15 Series	1963	+2½	+¼	3/16	...
P13 Series	1963	+2½	+¼	3/16	...
C25 Series	1963	+2⅓	+¼	3/16	...
C36 Series	1963	+2⅓	+¼	3/16	...
CLS 50⑩	1963	+3¾	+1½	⅛-3/16	7⅕
CLS 50⑪	1963	+3¾	+1½	⅛-3/16	7⅕
CDLS 60⑪	1963	+3¾	+1½	⅛-3/16	7⅕
CDLS 60⑫	1963	+3¾	+1½	⅛-3/16	7⅕

Model	Year	Caster, Deg.	Camber, Deg.	Toe-In, In.	Kingpin Inclination Deg.
S69, T60⑫	1963	+3¾	+1½	⅛-3/16	7⅕
CLMETU 80⑫	1963	+3¾	+1½	⅛-3/16	7⅕
CLMETU 80⑬	1963	+3¾	+1	⅛-3/16	5
CLMETU 80⑭	1963	+3¾	+1	⅛-3/16	5
P20, P30	1963	+2	+1½	¼-5/16	7½
10 Series	1961-62	½-1½⑤	0-1⑥	3/16⑦	8½⑧
20 Series	1961-62	½-1½⑤	0-1⑥	3/16⑦	8½⑧
30 Series	1961-62	½-1½⑤	0-1⑥	3/16⑦	8½⑧
40 Series	1962-62	½-1½⑤	0-1⑥	3/16⑦	8½⑧

WHEEL ALIGNMENT SPECIFICATIONS continued

Model	Year	Caster, Deg.	Camber, Deg.	Toe-In, In.	Kingpin Inclination Deg.
10 Series	1960	1/2-1 1/2	0-1	1/8-3/16	8 1/2
20 Series	1960	1/2-1 1/2	0-1	1/8-3/16	8 1/2
30 Series	1960	1/2-1 1/2	0-1	1/8-3/16	8 1/2
40 Series	1960	1/2-1 1/2	0-1	1/8-1/4	8 1/2
50 Series	1960-62	④	2/3-1 1/3	⑨	⑦
60 Series	1960-62	④	2/3-1 1/3	⑨	⑦
70 Series	1960-62	④	2/3-1 1/3	⑨	⑦
80 Series	1960-62	④	2/3-1 1/3	⑨	⑦
1/2 Ton	1952	1 1/4-2 1/4	1/2-1 1/2	1/16-3/16	6 1/6-8 1/6
1/2 Ton	1953-55	1/2-1 1/2	1/2-1 1/2	1/16-3/16	6 1/6-8 1/6
3/4 Ton	1952	2-3	1/2-1 1/2	1/16-3/16	6 1/6-8 1/6
3/4 Ton①	1952	2 3/4-3 3/4	1/2-1 1/2	1/16-1/4	6 1/6-8 1/6
3/4 Ton②	1953-55	1/4-1 1/4	1/2-1 1/2	1/16-3/16	6 1/6-8 1/6
3/4 Ton①	1953-55	1 3/4-2 3/4	1/2-1 1/2	1/16-3/16	6 1/6-8 1/6
3/4 Ton②	1953-55	1 3/4-2 3/4	1/2-1 1/2	1/16-1/4	6 1/6-8 1/6
1 Ton①	1952	2 1/4-3 1/4	1/2-1 1/2	1/16-1/4	6 1/6-8 1/6
1 Ton②	1952	1 3/4-2 3/4-	1/2-1 1/2	1/16-1/4	6 1/6-8 1/6
1 Ton①	1953-55	1 1/4-2 1/4	1/2-1 1/2	1/16-1/4	6 1/6-8 1/6
1 Ton②	1953-55	3/4-1 3/4	1/2-1 1/2	1/16-1 1/2	6 1/6-8 1/6
1 1/2 Ton	1952	2 1/4-3 1/4	1/2-3 1/4	1/16-1/4	6 1/6-8 1/6
1 1/2 Ton	1953-55	1 1/4-2 1/4	1/2-1 1/2	1/16-1/4	6 1/6-8 1/6
2 Ton①	1952	2 1/4-3 1/4	1/2-1 1/2	1/16-1/4	6 1/6-8 1/6
2 Ton③	1952	2 1/2-3 1/2	1/2-1 1/2	1/16-1/4	6 1/6-8 1/6
2 Ton①	1953-55	1/4-1 1/4	1/2-1 1/2	1/16-1/4	6 1/6-8 1/6
2 Ton③	1953-55	2 1/4-3 1/4	1/2-1 1/2	1/16-1/4	6 1/6-8 1/6
3100	1956-57	1 1/2	1/2-1 1/2	1/8-7/32	7.16
3100	1958-59	1 1/2	1 1/4-1 3/4	1/8-7/32	6.16-8.18
3200	1956-57	1 1/2	1/2-1 1/2	1/8-7/32	7.16
3200	1958-59	1 1/2	1 1/4-1 3/4	1/8-7/32	6.16-8.18
3400	1956-57	2	1/2-1 1/2	1/4-5/16	7.16
3400	1958-59	2	1 1/4-1 3/4	1/4-5/16	6.16-8.18
3500	1956-57	2	1/2-1 1/2	1/4-5/16	7.16
3500	1958-59	2	1 1/4-1 3/4	1/4-5/16	6.16-8.18
3600	1956	1 1/2	1/2-1 1/2	1/4-5/16	7.16
3600	1957	3	1/2-1 1/2	1/4-5/16	7.16
3600	1958-59	3	1 1/4-1 3/4	1/4-5/16	6.16-8.18
3700	1956-57	2	1/2-1 1/2	1/4-5/16	7.16
3700	1958-59	2	1 1/4-1 3/4	1/4-5/16	6.16-8.18
3800	1956-57	2 1/4	1/2-1 1/2	1/4-5/16	7.16
3800	1958-59	2 1/4	1 1/4-1 3/4	1/4-5/16	6.16-8.18
4100	1956-57	2	1/2-1 1/2	1/4-5/16	7.16
4100	1958-59	2	1 1/4-1 3/4	1/4-5/16	6.16-8.18
4400	1956-57	2	1/2-1 1/2	1/4-5/16	7.16
4400	1958-59	2	1 1/4-1 3/4	1/4-5/16	6.16-8.18
4500	1956-57	2	1/2-1 1/2	1/4-5/16	7.16
4500	1958-59	2	1 1/4-1 3/4	1/4-5/16	6.16-8.18
5000	1956-57	2	1/2-1 1/2	1/4-5/16	7.16
5000	1958-59	2	1 1/4-1 3/4	1/4-5/16	6.16-8.18
6000	1956-57	1 1/4	1/2-1 1/2	1/4-5/16	7.16
6000	1958-59	2 1/4	1 1/4-1 3/4	1/4-5/16	6.16-8.18
6242	1958-59	2 3/4	1 1/4-1 3/4		6.16-8.18
6642	1958-59	2 3/4	1 1/4-1 3/4	1/4-5/16	6.16-8.18
7000	1956-59	1 3/4	1/2-1 1/2	1/4-5/16	4
8000	1956-59	2 1/2	1/2-1 1/2	1/4-5/16	4
9000	1956-59	1 3/4	1/2-1 1/2	1/4-5/16	4
10000	1956-59	2 1/2	1/2-1 1/2	1/4-5/16	4

①—Conventional. ②—Forward control. ③—Cab-over-engine. ④—Left side 1/2° negative; right side 1/2° positive.
⑤—Models P20, P30 1 1/2-2 1/2°. Models K10, K20 2 1/2-3 1/2°. ⑥—Models P20, P30 1-2°. Models K10, K20 1 1/4-1 3/4°.
⑦—Models P20, P30 1/4-5/16". Models K10, K20 1/8-3/8". ⑧—Models P20, P30, K10, K20 7 1/2°.
⑨—Trim height 7 1/2-6 1/2": Toe-out 1/4".
Trim height 6 1/2-5 1/2": Toe-out 3/16".
Trim height 5 1/2-3": Toe-out 1/16".
Trim height 3" or less: Overload condition. Reduce load or install heavier torsion bars. ⑩—Rated capacity 4000 lbs.
⑪—Rated capacity 5000 lbs. ⑫—Rated capacity 7000 lbs.
⑬—Rated capacity 9000 lbs. ⑭—Rated capacity 11000 lbs.

GENERATOR & REGULATOR SPECIFICATIONS

★To polarize generator, reconnect leads to regulator; then momentarily connect a jumper wire from the "Gen" to the "Bat" terminals of the regulator.

Year	Generator						Regulator					
								Cutout Relay				
	Generator Number	Ground Polarity	Rated Cap. Amps.	Gen. Field Ground Location★	Brush Spring Tension, Ounces	Field Current Amperes	Regulator Number	Voltage to Close Points	Armature Air Gap, Inch	Voltage Regulator Setting Volts	Current Regulator Setting Amperes	Current and Voltage Armature Air Gap, Inch
1952	1100013	Neg.	35	External	28	1.85-2.03	1118301	6.4	.020	7.3	38	.075
1953-54	1100018	Neg.	45	External	28	1.87-2.00	1118827	6.4	.020	7.3	47	.075
1953-54	1100028	Neg.	40	External	28	1.87-2.00	1118300	6.3	.020	7.1	39	.075
1955	1100310	Neg.	25	External	28	1.50-1.62	1119000	12.7	.020	14.4	25	.075
1956-57	1100326	Neg.	25	External	28	1.50-1.62	1119000	12.6	.020	14.3	25	.075
1956-57	1102041	Neg.	30	External	28	1.48-1.62	1119003	12.6	.020	14.3	30	.075
1957	1102056	Neg.	30	External	28	1.48-1.62	1119001	12.6	.020	14.3	29	.075

continued

GENERATOR & REGULATOR SPECIFICATIONS

★To polarize generator, reconnect leads to regulator; then momentarily connect a jumper wire from the "Gen" to the "Bat" terminals of the regulator.

Year	Generator						Regulator					
								Cutout Relay				
	Generator Number	Ground Polarity	Rated Cap. Amps.	Gen. Field Ground Location★	Brush Spring Tension, Ounces	Field Current Amperes	Regulator Number	Voltage to Close Points	Armature Air Gap, Inch	Voltage Regulator Setting Volts	Current Regulator Setting Amperes	Current and Voltage Armature Air Gap, Inch
1958–62	1102096	Neg.	30	External	28	1.69–1.79	1119003	12.7	.020	14.3	30	.075
1959	1102115	Neg.	35	External	28	1.69–1.79	1119168	12.6	.020	14.3	34	.075
1961–62	1102268	Neg.	35	External	28	1.48–1.62	1119002	12.7	.020	14.3	35	.075
1960–61	1102173	Neg.	35	External	28	1.69–1.79	1119168	12.7	.020	14.3	35	.075
1962	1102202	Neg.	35	External	28	1.69–1.79	1119002	12.7	.020	14.3	35	.075
1960	1105116	Neg.	35	External	28	2.73–3.00	1119003	12.7	.020	14.3	30	.075
1955	1106982	Neg.	40	External	28	1.37–1.50	1119004	12.2	.020	13.9	39	①

①—Voltage regulator air gap .063", current regulator .075".

Engine Section

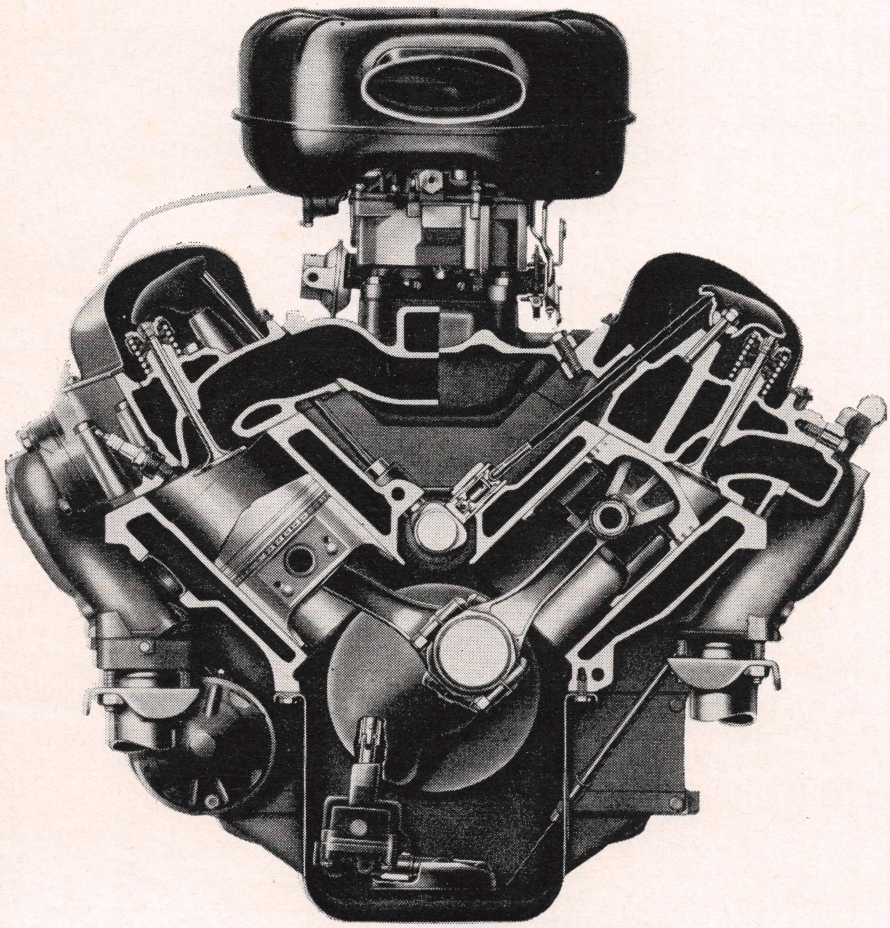

V8-348 and 409 engines

ENGINE, REPLACE

All engines, except for the following items, are removed from the chassis in the conventional manner:

1. On Step Van models, it is necessary to remove the engine box, driver's seat and floor panel between stepwells (P20 and P30 only). Also remove floor pan around steering column and pedals.
2. On Low Cab Forward models, remove front end sheet metal.
3. Vehicles with 4-153, 6-230 and 6-292 engines with stick shift transmission, remove transmission before lifting out engine. With automatic transmission, remove engine separately from transmission, leaving transmission in vehicle. Be sure to secure converter in transmission with a retaining strap to prevent it from falling out when engine is removed.
4. On 6-235, 6-261 and all V8's remove engine and transmission together.

CYLINDER HEAD, REPLACE

4-153, 6-230, 6-292 Engines

1. Remove necessary access covers depending on vehicle being serviced.
2. Drain cooling system and remove air cleaner.
3. Disconnect choke cable, accelerator pedal rod at bellcrank on manifold, and fuel and vacuum lines at carburetor.
4. Disconnect exhaust pipe at manifold flange, then remove manifolds and carburetor as an assembly.
5. Disconnect wire harness from temperature sending unit and coil, leav-

ing harness clear of clips on rocker arm cover.
6. Disconnect radiator hose at water outlet housing and battery ground strap at cylinder head.
7. Remove spark plugs. On 6-cylinder engines, remove coil.
8. Remove rocker arm cover. Back off rocker arm nuts, pivot rocker arms to clear push rods and remove push rods.
9. Unfasten and remove cylinder head.
10. Reverse removal procedure to install and tighten head bolts to the specified torque and in the sequence shown in Figs. 1 and 2.

6-235, 6-261 Engines

1. Drain radiator, raise hood, remove air cleaner.
2. Disconnect choke and throttle wires from carburetor if engine is so equipped.
3. Remove lower end of throttle rod from bell crank and disconnect throttle return spring.
4. Disconnect gasoline and vacuum lines from carburetor. If equipped with two-speed axle and/or Hydro-vac, disconnect vacuum line from manifold fitting.
5. Remove gasoline and vacuum line retaining clip from water outlet.
6. Unfasten and remove manifold assembly from cylinder head.
7. Remove intake manifold pilot sleeves.

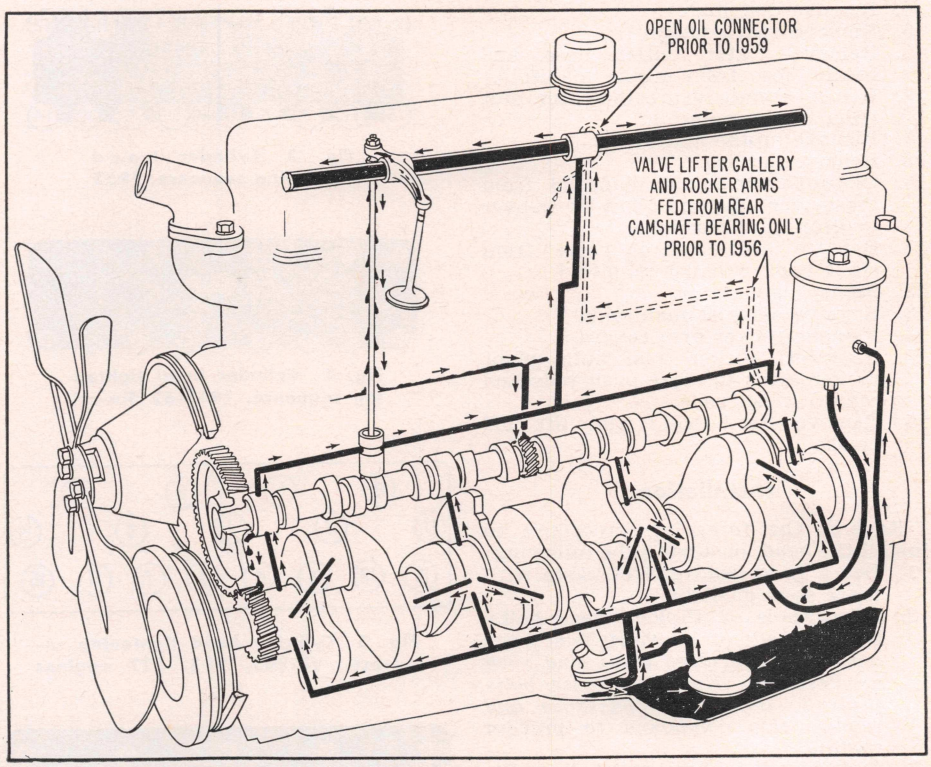

Engine oiling system. 6-235, 6-261 engines

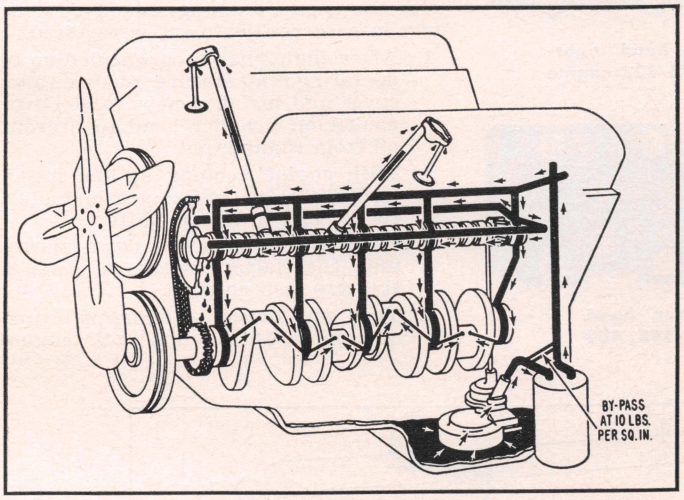

Engine oiling system. V8-283, 327 engines

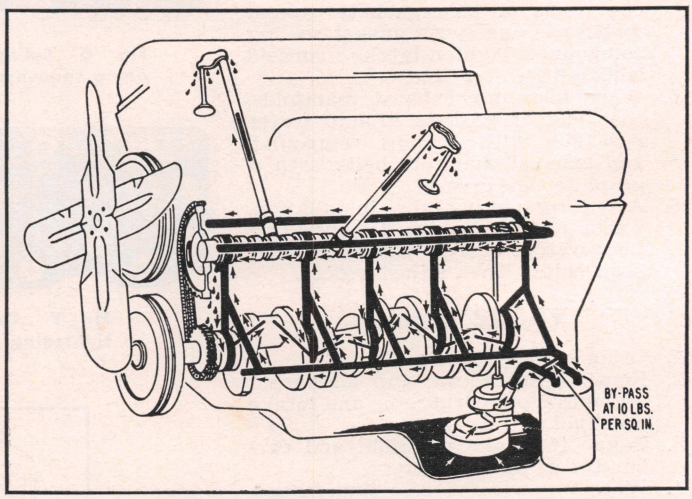

Engine oiling system. V8-348, 409 engines

8. Disconnect radiator hose from water outlet, remove outlet-to-cylinder bolts and remove outlet and thermostat.
9. If so attached, remove battery ground strap-to-cylinder head bolt.
10. On engines with positive crankcase ventilation, remove air cleaner attachment to rocker arm cover.
11. Remove rocker arm cover.
12. Remove all spark plugs.
13. Remove ignition coil.
14. Remove temperature indicator element from cylinder head.
15. Remove rocker arm assembly.
16. Remove push rods and valve lifters.
17. Unfasten and remove cylinder head.
18. Reverse removal procedure to install and tighten head bolts to the specified torque and in the sequence shown in Figs. 3 and 4.

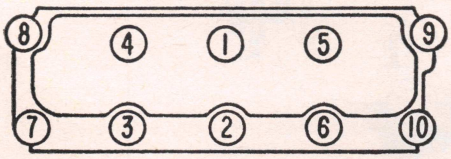

Fig. 1 Cylinder head tightening sequence. 4-153 engine

V8-265, 283, 327

1. Drain radiator and remove air cleaner and crankcase ventilator.
2. Disconnect choke and throttle rod from carburetor.
3. Disconnect fuel and vacuum from carburetor.

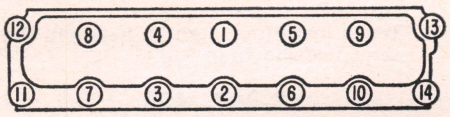

Fig. 2 Cylinder head tightening sequence. 6-230, 6-292 engines

4. Remove distributor.
5. Remove spark plugs.
6. Remove water outlet hose and heater hose from intake manifold.
7. Remove temperature indicator unit from intake manifold.
8. Remove intake manifold.
9. Remove fan belts.
10. Disconnect exhaust manifold from cross-over pipe and allow cross-over to drop for clearance.
11. Remove heat control valve from right bank exhaust manifold.
12. Remove generator.
13. Remove exhaust manifolds.
14. Remove rocker arm covers.
15. Back off rocker arm nuts, pivot rocker arms to clear push rods and remove push rods.
16. Remove head bolts and lift off heads.

Installation

Reverse the foregoing procedure to install the head, observing the following:

1. Use a good head gasket paste with these steel gaskets.
2. Oil threads of all *long* head bolts. *Coat threads of all short head bolts with special sealing compound such as Permatex No. 3 as these bolts protrude into water passages and require this compound to prevent rusting.*
3. Install and tighten head bolts a little at a time in the order shown in Fig. 5.
4. When installing intake manifold, coat ends of side gaskets around water passages with gasket sealing compound. Tighten intake manifold bolts a little at a time.
5. When installing exhaust manifolds, coat end of gaskets around water passages with sealing compound, and exhaust manifold bolts with a graphite type grease.
6. After completing the installation, warm up the engine to operating temperature and re-torque cylinder head bolts. Then adjust valves.

V8-322 Engine

1. Drain cooling system.
2. Remove air cleaner and disconnect all pipes from carburetor and intake manifold.
3. Take off intake manifold and carburetor as an assembly.
4. When removing *right* cylinder head, remove generator mounting bracket.
5. When removing *left* cylinder head, disconnect temperature gauge wire.
6. Remove spark plug cover and disconnect wires from plugs.
7. Disconnect water manifold from both cylinder heads and disconnect exhaust manifold from head to be removed.
8. With air hose and cloths, clean dirt off cylinder head and adjacent area to avoid getting dirt into engine, and *particularly into the hydraulic valve lifters.*
9. When installing, tighten heads in the sequence shown in Fig. 6.

V8-348, 409

1. Remove air compressor and/or power steering pump if so equipped.

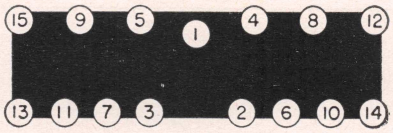

Fig. 3 Cylinder head tightening sequence. 1952

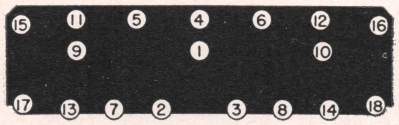

Fig. 4 Cylinder head tightening sequence. 1953-62 Six-cyl.

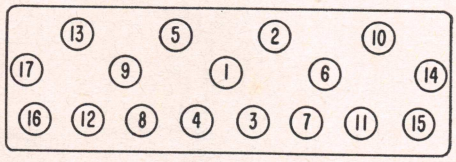

Fig. 5 Cylinder head tightening sequence. V8-265, 283, 327 engines

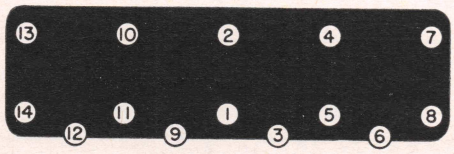

Fig. 6 Cylinder head tightening sequence. V8-322 engine

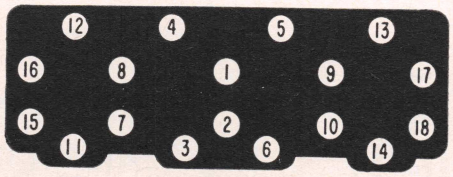

Fig 7 Cylinder head tightening. V8-348, 409

2. Drain radiator and remove air cleaner.
3. Disconnect choke and throttle linkage and fuel and vacuum lines from carburetor.
4. Disconnect wiring from engine as required.
5. Remove distributor and spark plugs.
6. Remove intake manifold and fan belt.
7. Remove exhaust manifolds.
8. If left head is to be removed take off generator.
9. Remove rocker arm covers.
10. Back off rocker arm nuts, pivot rocker arms to clear push rods and lift out push rods, noting that exhaust push rods are longer than intake rods.
11. Unfasten and lift off heads.
12. Reverse removal procedure to install heads and tighten them in the sequence shown in Fig. 7.

VALVE ARRANGEMENT

Front to Rear

4 Cylinder ..... E-I-I-E-E-I-I-E
6 Cylinder ..... E-I-I-E-E-I-I-E-E-I-I-E
V8's ..... E-I-I-E-E-I-I-E

VALVES, ADJUST

Hydraulic Lifters

The following procedure, performed with the engine running should be done only in case readjustment is required.

1. After engine has been warmed up to operating temperature, remove valve cover and install a new valve cover gasket on cylinder head to prevent oil from running out.
2. With engine running at idle speed, back off valve rocker arm nut until rocker arm starts to clatter.
3. Turn rocker arm nut down slowly until the clatter just stops. This is the zero lash position.
4. Turn nut down ¼ additional turn and pause 10 seconds until engine

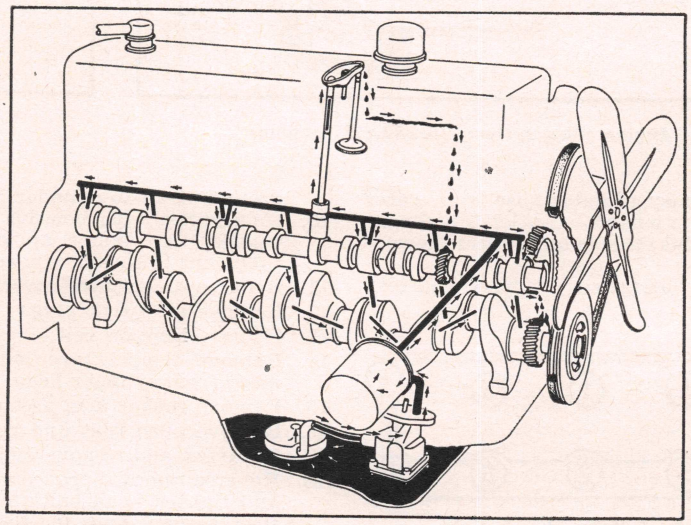

Engine oiling system. 6-230, 6-292, 4-153 engines

runs smoothly. Repeat additional ¼ turns, pausing 10 seconds each time, until nut has been turned down the number of turns listed in the *Valve Specifications Chart* from the zero lash position.

Service Note

This preload adjustment must be done slowly to allow the lifter to adjust itself to prevent the possibility of interference between the intake valve head and top of piston, which might result in internal damage and/or bent push rods. Noisy lifters should be replaced.

1961 Service Note

There is an "Engine Date Stamp" located on a machined surface at the front of the cylinder block which denotes the month and day on which the engine was assembled.

V8 engines assembled on and after 1/23/61 (date stamped F-0123) and 1/30/61 (stamped T-0130) are equipped with short travel lifters similar to those used in 1960 and earlier models. Engines assembled before these dates have long travel lifters. Be sure to check the date stamp before adjusting valves on 1961 V8 engines.

Mechanical Lifters

With the engine warmed to operating temperature as described above, turn rocker arm stud nut or adjusting screw as required to obtain the clearances given in the *Valve Specifications* table.

Service Note

To be sure that the valves and lifters function perfectly, it is strongly recommended that a vacuum gauge be used when making the adjustment on hydraulic lifter jobs. With vacuum gauge connected and engine idling, tighten each rocker arm nut until the *highest and steadiest vacuum is indicated on the gauge.*

ROCKER ARM STUDS

Rocker arm studs that have damaged threads may be replaced with standard studs. Loose studs should be replaced with .003″ or .013″ oversize studs which are available for replacement.

Remove the old stud by placing a suitable spacer over the stud, Fig. 8. Install a nut and flat washer on the stud and pull out the stud by turning the nut. After reaming the hole for an oversize stud, coat the press-fit area of the new stud with rear axle lubricant. Install the stud by driving it in until it protrudes from the head the same distance as the other studs, Fig. 9.

PUSH RODS

1962-63 Service Note

When a replacement push rod has a paint stripe at one end, this painted end must be installed in contact with the rocker arm. To provide durability a hardened insert is incorporated in the rocker arm end of these push rods.

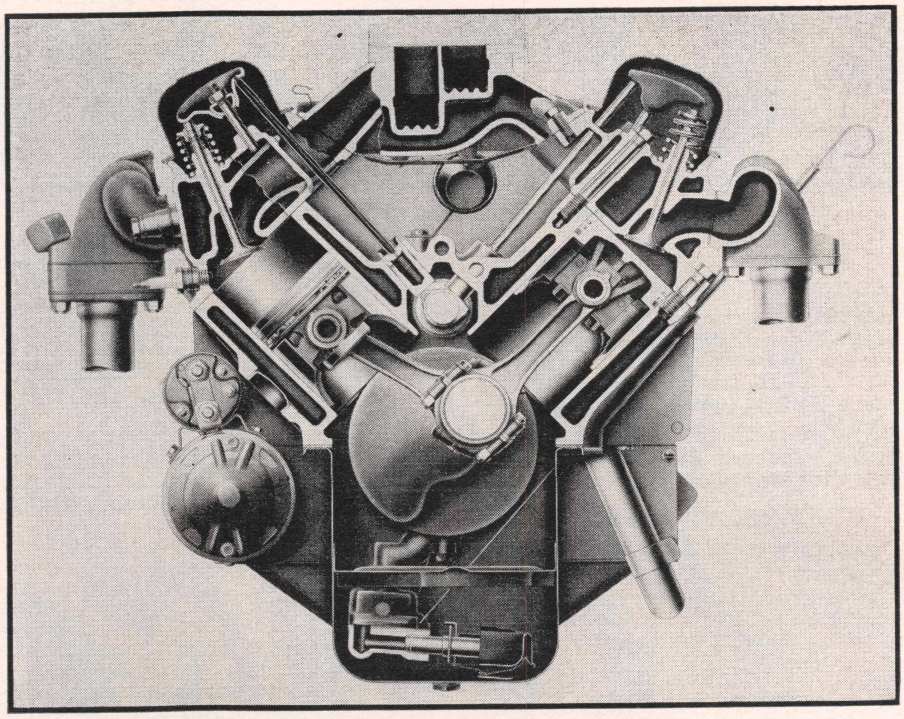

V8-265, 283 and 327 engines

On both the 348 and 409 engines, the exhaust valve push rods are longer than the inlet valve push rods used in these engines.

ROCKER ARMS

1952-62 Sixes

Sludge and gum formations in the rocker arms and shafts will restrict the normal flow of oil to rocker arms and valves. Each time the rocker arm and shaft assemblies are removed they should be disassembled and thoroughly cleaned.

1. Remove support bolts, hairpin locks, springs, rocker arms and supports, Fig. 10.
2. Clean all sludge and gum formation from the inside and outside of the shafts.
3. Clean oil holes and passages in the shafts and rocker arms.
4. Clean rocker arm oil collector.
5. Inspect shafts for wear. Check fit of rocker arms on shafts and check valve end of rocker arms for excessive wear. Replace all worn parts.

Service Note

There are three each of eight different type rocker arms used—right and left-hand exhaust and right and left-hand intake. They must be installed on the shafts in the correct position. For identification, each type rocker arm carries a different number stamped on the side. The proper locations of the rocker arms according to number are as follows:

For 216 and 261 Engines

No. on Rocker	Type Rocker Arm	For Cylinder No.
1	L.H. Exhaust	1-3-5 Exhaust
2	R.H. Exhaust	2-4-6 Exhaust
5	L.H. Intake	2-4-6 Intake
6	R.H. Intake	1-3-5 Intake

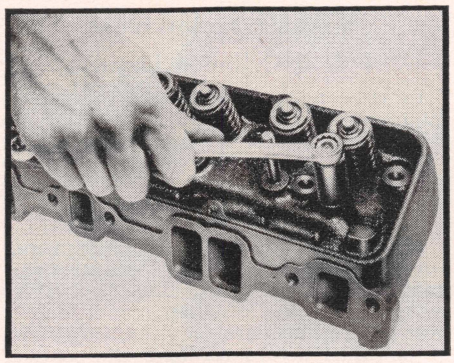

Fig. 8 Removing valve rocker stud

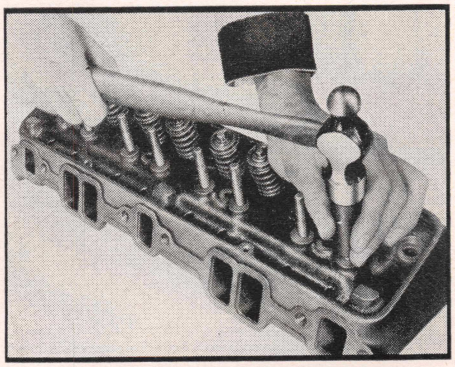

Fig. 9 Installing valve rocker stud

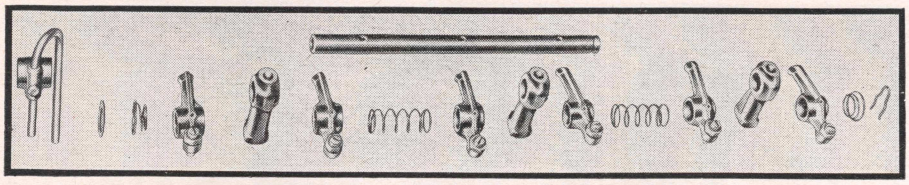

Fig. 10 Layout of rocker arm and shaft parts. 1952-62 Sixes

For 235 Engines

No. on Rocker	Type Rocker Arm	For Cylinder No.
9	L.H. Exhaust	1-3-5 Exhaust
0	R.H. Exhaust	2-4-6 Exhaust
3	L.H. Intake	2-4-6 Intake
4	R.H. Intake	1-3-5 Intake

One end of each rocker arm shaft is plugged; the open end of each shaft must be toward the center.

V8-322 Engine

The eight rocker arms for each bank of cylinders are mounted on a tubular steel shaft supported on the cylinder head by four brackets. The rocker arms are offset to accommodate the different planes of movement of the valves and the push rods which pass through the cylinder head to one side of the valves.

Note that the rocker arm and shaft assemblies are identical and interchangeable. The four rocker arms on each end of the shaft are offset toward the middle of the shaft so that no special markings are required for proper assembly.

A small notch cut in one end of the rocker arm shaft must be upward, and this end of the shaft must be toward the front of the engine on the right bank and toward the rear of the engine on the left bank. Assembling the shaft to rocker arms with the notch placed as specified will place the oil holes in the shaft in the proper relationship to the rocker arms.

VALVES, REMOVE

1. Remove the cylinder head as previously outlined and place it on a work bench.
2. With a suitable valve spring compressor, Fig. 11, compress the valve springs and remove valve keys, spring caps, oil seals and springs.
3. Remove exhaust valve rotators on engines so equipped.
4. Remove valves from cylinder head and place them in a board with numbered holes so they can be identified as to the valve port from which they were removed.

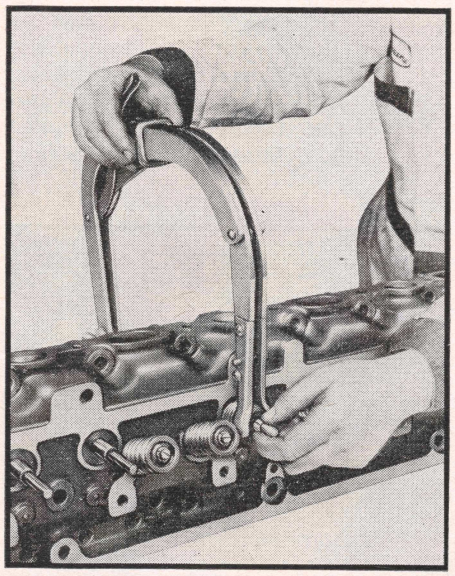

Fig. 11 Use of valve spring compressor tool

Caution

V8-348 engines are equipped with exhaust valves filled with sodium for cooling purposes. When handling these valves, follow these precautions:

1. Never cut open an old valve and be extremely careful when removing a broken valve from an engine. Otherwise, the metallic sodium in the valve may contact and burn the skin.
2. Bury discarded sodium-cooled valves in some inaccessible place to prevent other persons from handling them. *Never immerse one of these valves in water.*

V8 Engines

Place the cylinder head on its side and, with a suitable valve spring compressor, compress the valve spring and remove the valve locks. Release the tool and remove spring retainer, the valve baffle on intake valves, and seal from valve stem. Repeat operation on each valve.

Remove valves from head and place them in a board with numbered holes so they will be in proper sequence for inspection and assembly.

Remove rocker arm nuts, lift rocker arms off studs and remove pivot balls from rocker arms.

Clean all carbon from combustion chambers, valve ports, valve bores, push rods (inside and outside), valve stems and heads, and deposits from pistons and cylinders.

VALVES, GRIND

4 & 6 Cylinder Engines

In refacing valves, take off only the minimum of metal required to clean up the valve faces. If the outer edge of the valve becomes too thin or sharp due to excessive grinding, the valve must be replaced.

Inspect the valve seats in the head for cracks, burns, pitting, ridges or improper angle. During any general engine overhaul, it is advisable to reface the valves seats regardless of their condition. If new valve guides are required, they must be installed before refacing the seats if the equipment used has a valve guide pilot.

The valve seat width after refacing should measure $\frac{1}{16}$" to $\frac{3}{32}$" except exhaust valve on 261 engine which should be $\frac{3}{32}$" to $\frac{1}{8}$". The width may be checked by placing a scale across the face of the valve seat.

A simple check can be made to prove the fit of the valve in the valve seat. Make pencil marks about $\frac{1}{4}$ in. apart across the valve face, place the valve in its guide and give the valve $\frac{1}{2}$ turn in each direction while exerting firm pressure on the valve head. Remove the valve and, if all pencil marks have not been removed at the point of contact with the valve seat, it will be necessary to repeat the refacing operation and again check for proper seating.

V8 Engines

Clean the valves with a wire wheel brush, making sure that all carbon is removed from the top and bottom of the heads as well as the gum which might have accumulated on the stems.

In refacing valves take off only the minimum of metal required to clean up the valve faces. If the outer edge of the valve becomes too thin or sharp due to excessive grinding, the valve must be replaced. This condition leads to premature breakage, burning and pre-ignition due to heat localizing on this knife edge. If the edge of the valve head is less than $\frac{1}{32}$" thick after grinding, replace the valve.

Inspect the valve seats in the head for cracks, burns, pits, ridges or improper angle. Reconditioning the valve seats is very important because the seating of the valves must be perfect for the engine to deliver the power and performance built into it. Another important factor is the cooling of the valve heads. Good contact between each valve and its seat in the head is imperative to insure that the heat in the valve head will be properly carried away.

Regardless of the methods for valve seat reconditioning, the final seat for the valves should be $\frac{1}{16}$" to $\frac{3}{32}$" except exhaust valves on 348 engine, Taskmaster and Super-Taskmaster engines which should be $\frac{3}{32}$" to $\frac{1}{8}$". Seats shoud be concentric within .002" as indicated on dial gauge, Fig. 12.

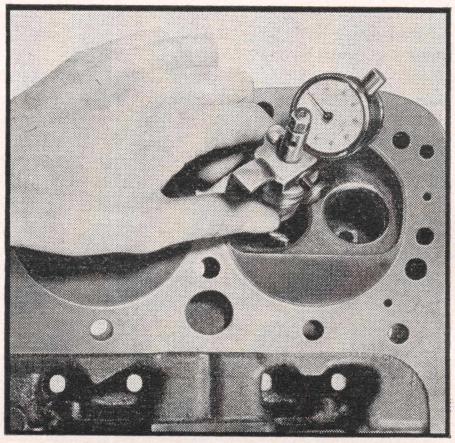

Fig. 12 Checking valve seat concentricity with dial gauge

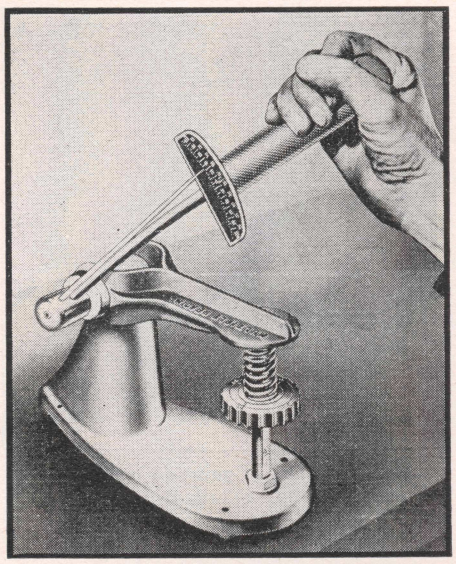

Fig. 13 Use of valve spring tension gauge

VALVE SPRING TESTING

After washing the springs in gasoline or other solvent, examine them for damage or corrosion due to acid etching, which will develop into surface cracks and cause spring failure.

Check the valve spring pressure on a spring testing fixture if one is available, Fig. 13. If not, at least check the free length of each spring by standing it alongside a new one. Any spring that does not conform to the pressure specifications given in the *Valve Data* table within 10% should be replaced. Likewise, any spring that stands up shorter than the new spring used for comparison should be discarded.

VALVE SPRING INSTALLED HEIGHT

When valves and seats are reground the position of the valve in the head is changed so as to lessen the valve spring tension. Without proper spring tension the valve does not seat long enough or it may not seat completely. Since the valve is cooled by transferring the heat from the valve head to the seat and thence to the coolant, improper valve spring tension will cause worn, pitted and distorted valves which result in loss of compression and power as well as poor gasoline mileage.

When valves, springs, retainers and locks are installed, measure the assembled height of the valve springs from the surface of the cylinder head spring pad to the underside of the spring retainer as shown in Fig. 14. If the assembled height is greater than the dimension given in the *Tune Up and Valve Specifications Chart,* install a spacer or shim of proper thickness between cylinder head spring pad and spring to bring the assembled height to specifications.

Do not install spacers unless necessary. Excessive use of spacers will result in overstressing valve springs and overloading camshaft lobes which could lead to spring breakage and worn camshaft lobes.

GRINDING VALVE STEMS

For Proper Lifter Clearance

If a valve grind job is needed, and if shims are found under the valve springs, very likely the valves, if reground, would not leave sufficient margin on the valve head for satisfactory operation. Since the maximum thickness of shimming that can be used satisfactorily is 1/16" and since the acceptable valve head margin is approximately $\frac{1}{16}$" to $\frac{3}{32}$", one can readily see that there would be insufficient margin left on the valve head if it was reground. Therefore, it is recommended that new valves be installed.

After grinding the valves, if shims are required to restore the correct valve spring installed height, the valve stem should be ground off the same amount as the thickness of shims required. This will automatically provide the proper static clearance between the hydraulic lifter and the push rod.

VALVE GUIDES, REPLACE

1952-62 Six & V8-322 Engine

Clean the valve guides with a wire guide brush, and clean the valves with a wire wheel brush, making sure that all carbon is removed from the top and bottom of the heads, as well as the gum which might have accumulated on the stems.

Excessive clearance between valve stems and guides will cause improper seating and burned valves. When there is too much clearance between intake valve stems and guides, there is a tendency to draw oil vapor through the guide on the suction stroke, causing excessive oil consumption, fouled spark plugs and poor low speed performance.

Valve stem-to-guide clearance may be checked with special "GO" and "NO-GO" gauges. Lacking these, an alternate method is to take a new valve and place it in each valve guide and feel the clearance by moving the valve stem back and forth. If this check shows excessive clearance, it will be necessary to replace the guides that are worn as indicated by this test. If the clearance is not excessive when checking with a new valve but is excessive when checked with the old valve, it is an indication that the old valve stem is worn and a new valve must be installed.

To remove the old guides, place the cylinder head on the table of an arbor press and, with a suitable piece of round stock, press out the guides.

Special drivers having stop collars are available to install the new guides to the correct position. Lacking these tools, install the guides so they are positioned as shown in Figs. 15, 16 and 17. After the guides are installed, they should be finish reamed with hand reamer.

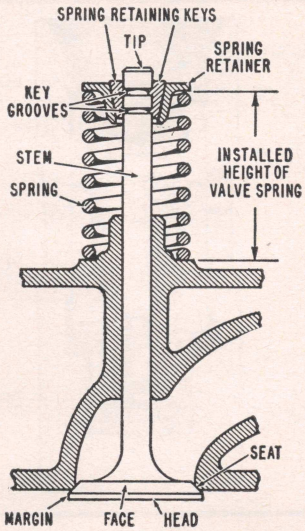

Fig. 14 Checking installed height of valve spring

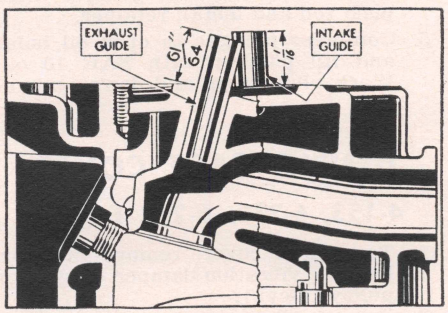

Fig. 15 Valve guide location. 1952-53 216 engine

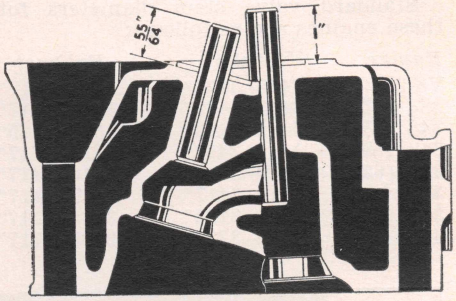

Fig. 16 Valve guide location. 1952-53 253 six-cyl.

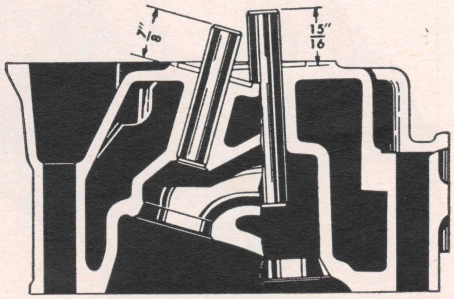

Fig. 17 Valve guide location. 1954-55 235 six-cyl. engine. For the 1956-62 235 and 261 six-cyl. engines, locate intake guide 1" and exhaust guide 15/16"

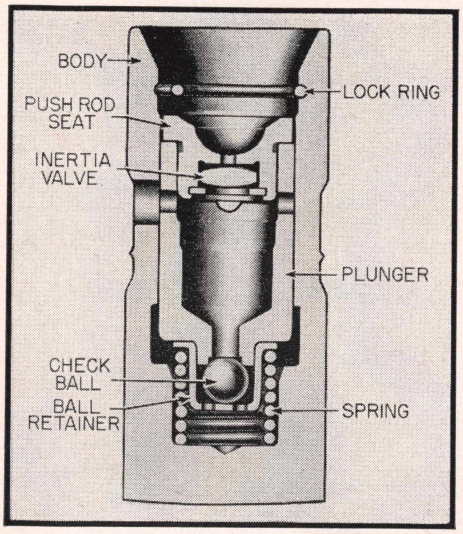

Fig. 18 Hydraulic valve lifter

V8-265, 283, 327, 348, 409

Valves operate in guide holes bored directly in the cylinder head. When valve stem-to-guide clearance becomes excessive, valves with oversize stems of .003", .015" and .030" are available for service replacement. When necessary to install valves with oversize stems the valve bores should be reamed to provide the clearance given in the *Tune Up and Valve Specifications* chart.

Check the valve stem clearance of each valve (after cleaning) in its respective valve guide. If the clearance exceeds the service limits of .004" on the intake or .005" on the exhaust, ream the valve guides to accommodate the next oversize diameter valve stem.

Standard valve stem diameters for these engines are as follows:

Engine	*Intake*	*Exhaust*
V8-265	.3415-.3422"	.3410-.3417"
283 (57-61)	.3415-.3422"	.3410-.3417"
348 (1958)	.3145-.3422"	.4335-.4345"
348 (59-61)	.3415-.3422"	.3710-.3717"
283 (62-63)	.3710-.3417"	.3410-.3417"
327	.3710-.3417"	.3410-.3417"
348 (62-63)	.3712-.3722"	.3705-.3717"
409	.3712-.3722"	.3705-.3717"

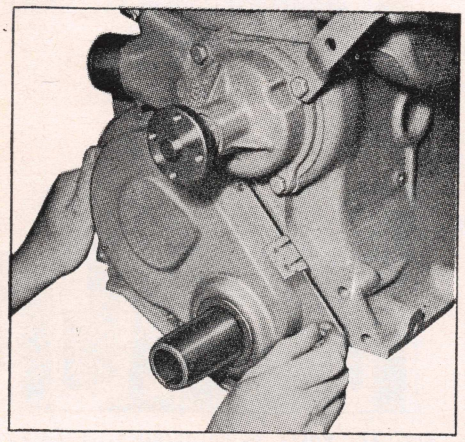

Fig. 20 Installing timing case cover. 4-153, 6-230, 6-292 engines

HYDRAULIC VALVE LIFTERS

The hydraulic valve lifters used in models with Powerglide, Fig. 18, are simple in design, readjustments are not necessary and servicing them requires that care and cleanliness be exercised in the handling of parts.

The easiest method for locating a noisy valve lifter is by the use of a piece of garden hose approximately 4 feet in length. Place the end of the hose near the end of each intake and exhaust valve with the other end of the hose near the ear. In this manner, the sound is localized, making it easy to determine which lifter is at fault.

Another method is to place a finger on the face of the valve spring retainer. If the lifter is not functioning properly, a distinct shock will be felt when the valve returns to its seat.

In most cases where noise exists in one or more lifters, all lifter units should be removed and cleaned. If dirt, varnish, carbon, etc. is found to exist in one unit, it more than likely exists in all the units.

Plungers are not interchangeable as they are selectively fitted at the factory. Should a plunger or lifter body become damaged, it is necessary to replace the entire unit.

The plunger must be free in the lifter body. A simple test for this is to be sure the plunger will drop of its own weight in the body. There must be no excessive leakdown and there must be no ball check valve leakage.

Valve lifters should be placed in a rack in their proper sequence so they can be installed in the original locations in the block.

Disassemble & Assemble

1. Hold plunger down with push rod and, using a small screw driver or awl, remove plunger retainer.
2. Remove parts from lifter body.
3. Clean all parts and inspect for damage. If any parts are damaged, the entire lifter assembly should be replaced. The inertia valve in the plunger for rocker arm lubrication should move when the plunger is shaken.
4. To reassemble, invert plunger and set ball into hole in plunger. Place ball check valve retainer over ball and on plunger. Place check valve retainer spring over retainer. Assemble body over plunger assembly. Turn assembly over and install push rod seat. Compress plunger with push rod and install retainer.
5. Compress plunger to open oil holes and fill plunger with SAE 10 oil. Work plunger up and down and refill.

TIMING CASE COVER

4-153, 6-230, 6-292 Engines

1. To remove cover, remove radiator.
2. Remove vibration damper (6-cyl.) or pulley (4-cyl.).
3. Remove oil pan
4. Unfasten and remove cover.

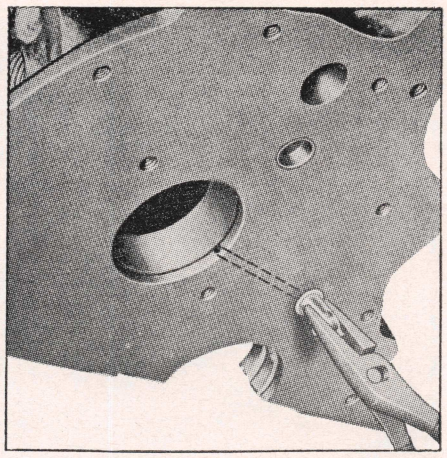

Fig. 19 Timing gear oil nozzle removal. 4-153, 6-230, 6-292 engines

5. Pry oil seal out of cover with a large screwdriver. Install new seal with open side of seal inside of cover and drive or press seal into place.
6. If oil nozzle is to be replaced, remove it with pliers as shown in Fig. 19. Drive new nozzle in place, using a suitable light plastic or rubber hammer.
7. Clean gasket surfaces.
8. Install a suitable centering tool over end of crankshaft.
9. Coat gasket with light grease and stick it in position on block.
10. Install cover over centering tool, Fig. 20, and install cover screws, tightening them to 6 to 8 ft. lbs. *It is important that the centering tool be used to align the cover so the vibration damper installation will not damage the seal and position seal evenly around damper hub surface.*

1952-62 Six

Before installing the timing gear cover, be sure that the oil seal is seated properly in its recess in the cover, otherwise premature wear of the seal will result, causing an oil leak.

When replacing the cover, use a sleeve

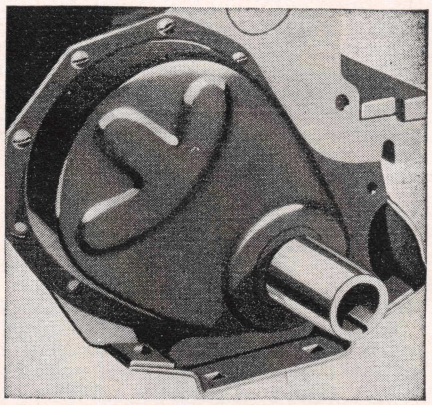

Fig. 21 Use of timing gear cover centering sleeve. 1952-62 Six

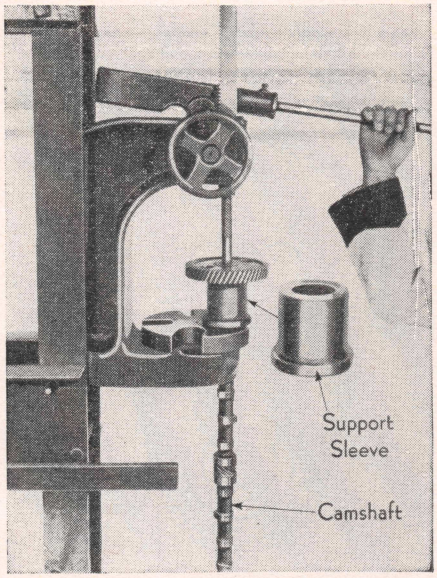

Fig. 22 Removing camshaft gear. 4 and 6 cylinder

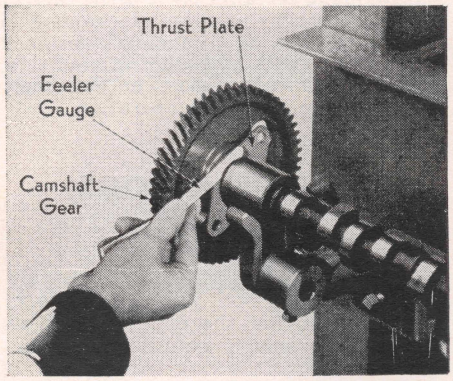

Fig. 23 Checking camshaft end play. 4 and 6 cylinder

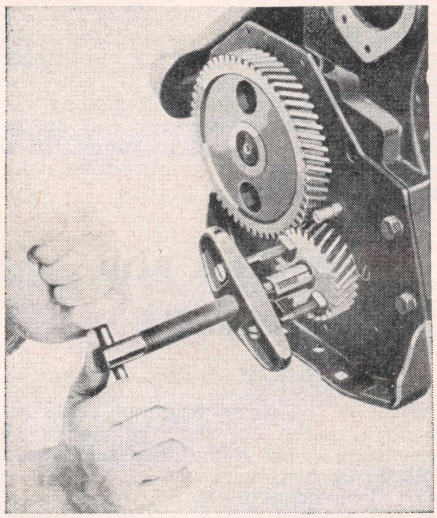

Fig. 24 Using puller to remove crankshaft gear. 4 and 6 cylinder

which is the same size as the hub of the vibration damper, Fig. 21, slipping it over the front end of the crankshaft to act as a guide when replacing the cover.

Apply a light film of grease on the inner circumference of the seal to prevent it from being damaged when the vibration damper is being installed.

V8-265, 283, 327, 348, 409

To remove the cover, take off vibration damper and remove oil pan. Remove heater hose from water pump, and water pump from cylinder block. Unfasten and remove cover from engine.

When installing the cover, make certain that the oil slinger is in place against the crankshaft sprocket. Coat the oil seal with light grease and, using a new cover gasket, install cover and gasket over dowel pins in cylinder block.

V8-322 Engine

To remove the cover, drain cooling system, then remove radiator, shroud, fan belt, fan, pulley and vibration damper. Remove all bolts that attach the cover and water manifold to upper and lower crankcase and cylinder heads. *Do not remove five small bolts attaching water pump to cover.* Remove cover and manifold, using care to avoid damaging oil pan gasket.

When installing the cover, install oil slinger on crankshaft with concave side outward and reinstall all parts by reversing the procedure for removal.

TIMING GEARS

4 & 6 Cylinder Engines

When necessary to install a new camshaft gear, the camshaft will have to be removed as the gear is a pressed fit on the shaft. The camshaft is held in position by a thrust plate which is fastened to the crankcase by two capscrews which are accessible through two holes in the gear web.

Use an arbor press to remove the gear and when doing so, a suitable sleeve, Fig. 22, should be employed to support the gear properly on its steel hub.

Before installing a new gear, assemble a new thrust plate on the shaft and press the gear on just far enough so that the thrust plate has practically no clearance, yet is free to turn. The correct clearance is from .001″ to .005″, Fig. 23.

The crankshaft gear can be removed by utilizing the two tapped holes in conjunction with a gear puller, Fig. 24.

When the timing gears are installed, be sure the punch-marks on both gears are in mesh, Fig. 25. Backlash between the gears should be from .004″ to .006″, Fig. 26. Check the run-out of the gears, Fig. 27, and if the camshaft gear run-out exceeds .004″ or the crank gear run-out is in excess of .003″, remove the gear (or gears) and examine for burrs, dirt or some other fault which may cause the run-out. If these conditions are not the cause, replace the gear (or gears).

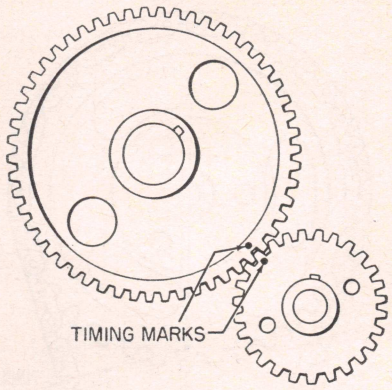

Fig. 25 Valve timing. 4 and 6 cylinder

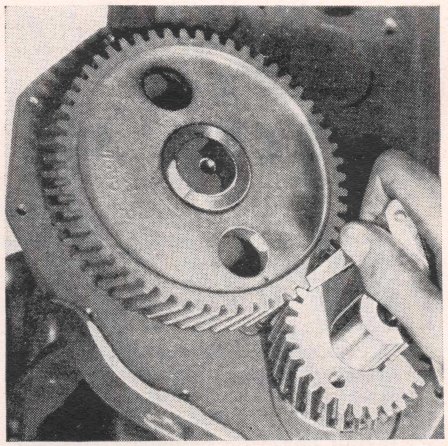

Fig. 26 Checking timing gear backlash. 4 and 6 cylinder

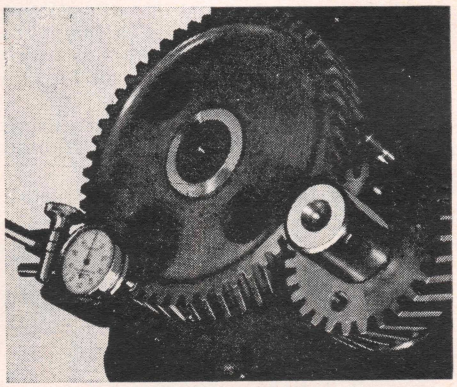

Fig. 27 Checking runout of timing gears with dial indicator. 4 and 6 cylinder

TIMING CHAIN

V8-265, 283, 327, 348, 409

1. Remove timing chain cover as outlined previously.
2. Remove crankshaft oil slinger.
3. Crank engine until "O" marks on sprockets are in alignment, Fig. 28.
4. Remove three camshaft-to-sprocket bolts.
5. Remove camshaft sprocket and timing chain together. Sprocket is a

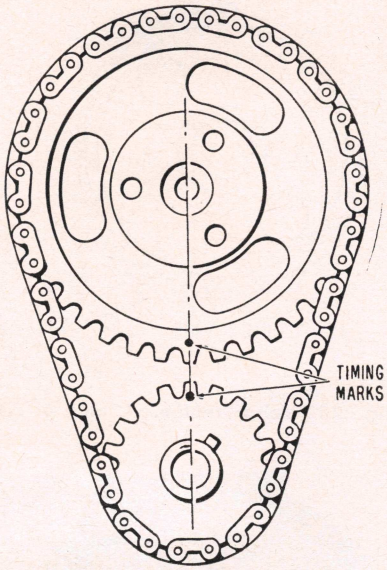

Fig. 28 Valve timing. V8-265, 283, 327, 348, 409

light press fit on camshaft for approximately 1/8". If sprocket does not come off easily, a light blow with a plastic hammer on the lower edge of the sprocket should dislodge it.

6. If crankshaft sprocket is to be replaced, remove it with a suitable gear puller. Install new sprocket, aligning key and keyway.
7. Install chain on camshaft sprocket. Hold sprocket vertical with chain hanging below and shift around to align the "O" marks on sprockets.
8. Align dowel in camshaft with dowel hole in sprocket and install sprocket on camshaft. *Do not attempt to drive sprocket on camshaft as welch plug at rear of engine can be dislodged.*
9. Draw sprocket onto camshaft, using the three mounting bolts. Tighten to 15-20 lb. ft. torque.
10. Lubricate timing chain and install cover.

V8-322 Engine

After removing the cover as outlined above, use two large screwdrivers to alternately work the camshaft and crankshaft sprockets outward until the camshaft sprocket is free of the camshaft. Remove this sprocket and chain and then remove the crankshaft sprocket.

Install the chain and sprockets as shown in Fig. 29.

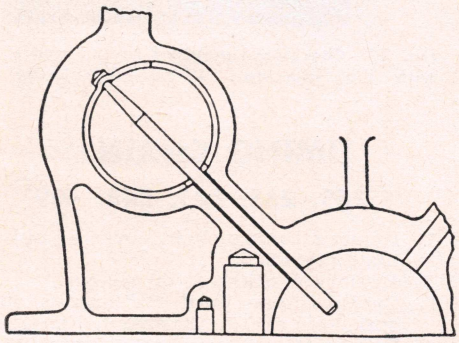

Fig. 30 Using round-nosed punch to stake camshaft bearings in place. 1952-62 Six

CAMSHAFT

4-153, 6-230, 6-292 Engines

To remove the camshaft, remove radiator, grille, push rods, valve lifters, oil pan, vibration damper (6 cyl) or pulley (4 cyl), and timing case cover. Then pull out camshaft and gear assembly.

If necessary to replace bearings, the engine will have to be removed from the chassis. Then remove camshaft, flywheel and crankshaft. Drive out the expansion plug at the rear of the rear camshaft bearing and use suitable equipment to remove and replace the bearings.

1952-62 Six

Camshaft end play should be from .001" to .005" and is controlled by a thrust plate at the front end of the shaft. This clearance can be checked by inserting a feeler ribbon between the front end of the shaft and the thrust plate, Fig. 23.

If necessary to replace bearings, drive out the expansion plug at the rear of the rear bearing and use suitable equipment to remove and replace the bearings.

Service Note

Be sure the oil holes in the bearings are lined up with the oil holes in the crankcase. Before reaming the bearings, insert a round-nosed punch, Fig. 30, through the oil passage from the main to the camshaft bearings and stake each bearing in place.

V8-265, 283, 327, 348, 409

To remove the camshaft, remove valve lifters, fuel pump and its push rod, radiator, timing chain and camshaft sprocket. Install two 5/16"-18 x 4" bolts in two camshaft bolt holes. Using these bolts as a puller, remove camshaft from engine.

V8-322 Engine

The camshaft is supported in five steel-backed babbitt-lined bearings which are pressed into the block. The bearings must be line-reamed to size after being pressed into place. Since this operation requires special reaming equipment the original bearings should be retained unless severely damaged.

Slightly scored camshaft bearings will be satisfactory if the surface of the camshaft journals are polished and bearings are cleaned up to remove burrs, and the fit of the bearings is free.

Camshaft end play is controlled by a spacing ring located between the camshaft front bearing journal and a thrust plate attached to the block behind the camshaft sprocket. The spacing ring provides the necessary clearance or end play when the sprocket is tightened against it by the sprocket bolt.

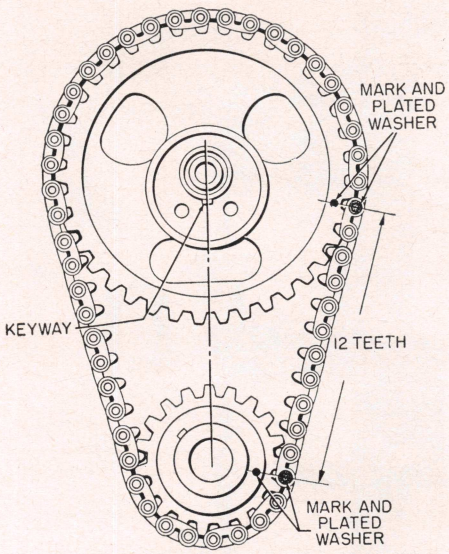

Fig. 29 Valve timing. V8-322 engine

Important—When a new camshaft is installed, make certain that it is the correct part for the type of valve mechanism in the engine. Use of a camshaft designed for an engine with hydraulic valve lifters, or vice-versa, will result in extremely rough and noisy engine operation.

PISTONS & RODS, REMOVE

All Models

After removing the cylinder head as outlined previously, examine the cylinder bores above the ring travel area. If the bores are worn so that a shoulder or ridge exists at this point, remove the ridge with a ridge reamer to avoid damaging rings or cracking ring lands of pistons during removal.

Remove the connecting rod caps and push the pistons and rods out of the cylinders, using care to prevent rod bolts from contacting and nicking crankshaft journals.

Make sure the rods and pistons are properly numbered so they can be installed in the original locations. It is advisable to install caps on rods to avoid mixing parts.

PISTON & ROD, ASSEMBLE

4-153, 6-230, 6-292 Engines

Position the connecting rod in its respective piston so that the flange or heavy side of the rod at the bearing end will be toward the front of the piston (cast depression in top of piston head). Of course, when installed in the cylinder, the cast impression in the piston head will face the front of the engine.

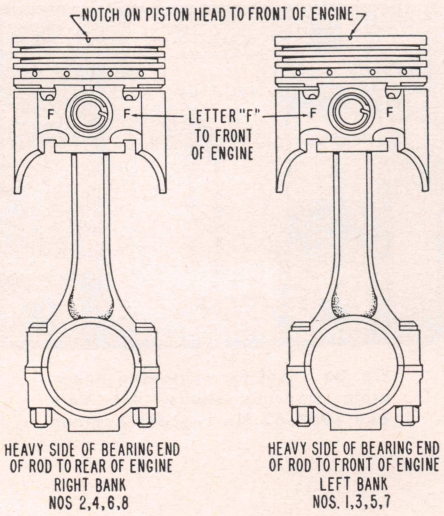

Fig. 31 Correct assembly of pistons and rods. V8-265, 283, 327, 348, 409

1952-62 Six

The connecting rod should be assembled to the piston so that when placed in the cylinder bore, the piston pin clamp bolt faces the camshaft side of the engine.

V8-265, 283, 327, 348, 409

All pistons have an "F" cast on the front side. There is also a notch cast in the top of the piston head at the front to facilitate proper installation, Fig. 31. The piston assemblies should always be installed with the notch toward the front of the engine.

The odd numbered piston assemblies will always be installed in the left bank of cylinders, while the even numbered piston assemblies will always be installed in the right bank of cylinders.

One side of the connecting rod will have two machined bosses. This side of the rod and cap of the two adjacent rods on each crankpin will always be facing each other. This means that the machined bosses on odd numbered rods will always be facing the front of the engine, while the machined bosses on even numbered rods will be facing the rear of the engine.

V8-322 Engine

The piston and rod should be assembled so that the valve depressions in the piston head are on the camshaft side. And when installed in the engine the valve depressions in the piston head will be toward the inner side of the cylinder block, Fig. 32.

PISTONS

A .001″ oversize piston is available for service use so that proper clearances can be obtained for slightly worn cylinder bores requiring only light honing to clean up the bores. In addition, oversizes of .020″, .030″ and .040″ are available. If the cylinders have less than .005″ taper or wear they can be reconditioned with a hone and fitted with the .001″ oversize piston.

PISTON PINS

4-153, 6-230, 6-292 Engines

Piston pins are a matched fit to the piston and are not available from Chevrolet separately. Piston pins will not become loose enough to cause a knock or tapping until after very high mileage. In such cases, a new piston and pin assembly should be installed.

Piston pins should be capable of supporting their own weight in either pin boss when coated with light engine oil and at 60°F. Higher or lower temperatures will cause false indications.

V8 Engines

Piston pins are mounted off center and are a tight press fit in the connecting rods and pivot in the pistons. Pins should be capable of supporting their own weight in either pin boss when coated with light engine oil at 60°F. temperature. Higher or lower temperatures will cause false indications. Pistons and pins are supplied as an assembly.

1954-62 Chevrolet 6

Pistons used in these engines are aluminum and not fitted with bushings.

To remove a piston pin, remove the piston pin clamp bolt and expand the clamp slot with a screwdriver or other suitable means. Then push the pin out of the piston with hand pressure. If it cannot be removed with hand pressure, use a suitable drift to drive it out.

When removing a pin with a drift, hold the piston in one hand, insert the drift and tap lightly with a hammer. Do not hold the connecting rod during this operation, otherwise misalignment of the rod may occur.

If the new pin cannot be installed in the piston with thumb pressure, enlarge the holes with an expansion reamer. Take only a light cut with the reamer. Ream the holes until the pin can be pushed into the piston with the pressure of both thumbs.

PISTON RINGS, REPLACE

All Models

When new piston rings are installed without reboring cylinders, the glazed cylinder walls should be slightly dulled, but without increasing the bore diameter. This is done with a "Glazebuster" or with a hone equipped with the finest grade of stones.

New piston rings must be checked for clearance in piston grooves and for gap in cylinder bores. Cylinder bores and piston grooves must be clean, dry and free of carbon and burrs.

Check the clearance of each ring in its piston groove by installing the ring and then inserting feeler gauges *under* the ring, Fig. 33. Any wear that occurs in the piston groove forms a step or ridge at the inner portion of the lower land. If gauges are inserted above the ring, the ring may rest on the step instead of on the worn portion of the lower land, and a false measurement of clearance will result.

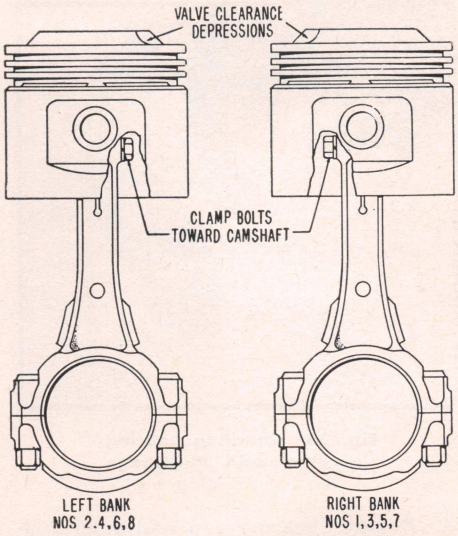

Fig. 32 Correct assembly of pistons and rods. V8-322 engine

If the piston grooves have worn to the extent that relatively high steps or ridges exist on the lower lands, the piston should be replaced because the steps will interfere with the operation of new rings and the ring clearances will be excessive. Piston rings are not furnished in oversize widths to compensate for ring groove wear.

ROD BEARINGS

Connecting rod bearing inserts are available in standard size and undersizes of .002″, .010″, .020″ and .030″. The bearings can be replaced without removing the rod assembly by removing the cap and replacing the upper and lower halves of the bearing. The clearance between the bearing and crankshaft can be measured by the use of Plastigage as follows:

1. Remove bearing cap and wipe oil from crankshaft journal and bearing insert.
2. With crankpin at approximately bottom dead center, place a piece of Plastigage in the center of the cap.
3. Reinstall the cap and tighten to the torque value given in the *Engine Tightening* chart.

Fig. 33 Checking ring clearance in groove

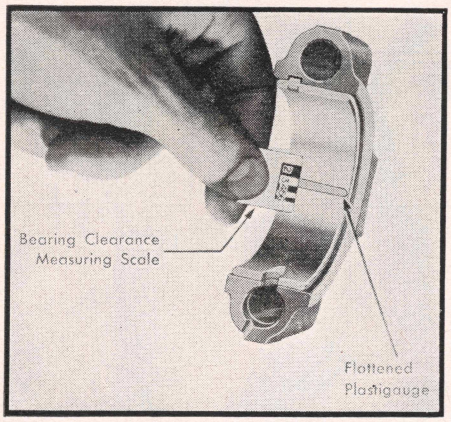

Fig. 34 Checking bearing clearance with Plastigage

4. Remove bearing cap and determine bearing clearance by comparing the width of the flattened Plastigage at its widest point with the graduation on the Plastigage scale, Fig. 34. The number within the graduation on the envelope indicates the clearance in thousands of an inch. If this clearance is greater than .004″ on an old bearing or greater than .003″ on a new bearing, or less than .001″, replace the bearing.

MAIN BEARINGS

4-153, 6-230, 6-292 Engines

Service Note

The rear main bearing journal has no oil hole drilling. To remove the upper bearing half (bearing half with oil hole) proceed as follows after cap is removed:

1. Use a small drift punch and hammer to start the bearing rotating out of the block.
2. Use a pair of pliers (tape jaws) to hold the bearing thrust surface to the oil slinger and rotate the crankshaft to pull the bearing out.
3. To install, start the bearing (side not notched) into side of block by hand, then use pliers as before to turn bearing half into place.
4. The last ¼″ movement may be done by holding just the slinger with the pliers or tap in place with a drift punch.

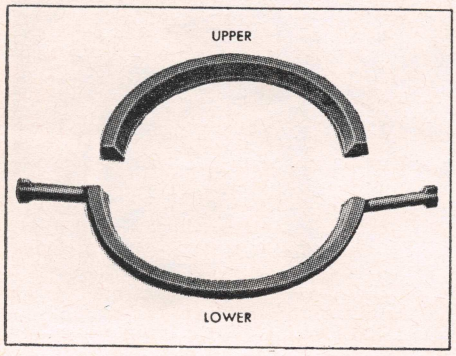

Fig. 36 Crankshaft rear oil seal. 4-153, 6-230, 6-292 engines

1952-55 Six

1. Remove radiator, vibration damper, fan belt, and spark plugs.
2. Loosen all rocker arm screws to relieve tension on camshaft.
3. Raise front and rear of vehicle about 8″ off floor, keeping it level.
4. Remove transmission floor pan and flywheel underpan.
5. Unfasten transmission support from cross member.
6. Uncouple gearshift selector rod from selector lever.
7. Raise rear of engine and support it with a bar across frame braces.
8. Release clutch fork from ball.
9. Unfasten transmission and slide it back about ¾″.
10. Remove oil pan and timing gear cover.
11. Remove oil pump and screen.
12. Rotate crankshaft to best possible position for removal of all bearing caps and mark timing gear position to allow for reassembly in same position.
13. Loosen all main bearing cap bolts, allowing crankshaft to drop about ⅜″.
14. Remove No. 2 and 4 bearing caps and take out upper and lower shells.
15. Install new upper bearing shells, locating dowel in hole and pressing bearings in place. If bearing has correct spread, shells should snap into place.

Bearings, Adjust

16. Install new lower bearing shells and replace caps, using three .002″ shims on each side of bearing. Draw bolts up until cap is snug to crankshaft, but not so tight as to raise crankshaft.
17. Repeat steps 14, 15 and 16 for No. 1 and 3 bearings.
18. Place jack under No. 3 bearing cap to raise crankshaft, keeping shaft horizontal and making sure all upper bearings remain in place. Also see that crankshaft gear meshes with camshaft gear at previously marked tooth position.
19. Draw all bearing caps up snug, then remove jack.
20. Starting with the rear bearing, remove shims evenly until there is a slight drag on crankshaft (when turned by hand) with bolts pulled up snug. Then replace a .002″ shim on one side. Again tighten bolts. The shaft should now turn freely. Loosen bolts of this bearing and follow same procedure with other bearings. Shims should be removed evenly, if possible. When they are not even, have the greatest number of shims on the same side of all bearings.
21. Complete the job by replacing the parts that were removed.

All V8 & 1956-62 Six

Shell type bearings are used, and if worn more than .004″ should be replaced. No attempt should be made to shim, file or otherwise take up worn bearings. To install new bearings:

1. Remove oil pan and spark plugs.
2. Remove cap and take out worn lower shell.

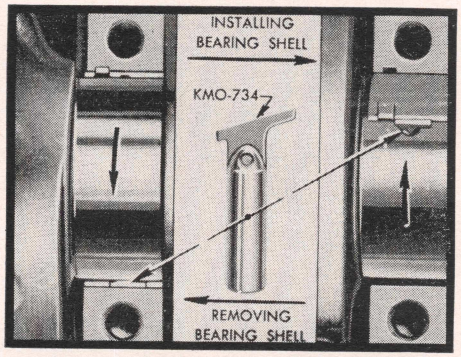

Fig. 35 Tool for removing upper main bearing shells. All V8's and 1956-62 Six cylinder engines

3. Rotate the crankshaft in the normal direction to turn the upper shell out of the crankcase, using a flattened cotter pin in the oil hole in the crankshaft to contact the shell and force it out, Fig. 35.
4. Place the new upper shell on the crankshaft journal with the locating notch in the correct position and rotate the shaft to turn the shell in place.
5. Install the lower shell in the cap and install the cap.
6. Bearing clearance can best be measured with Plastigage as outlined for the rod bearings. However, when one main bearing is being checked, the other four caps should be tight unless the engine is out of the chassis and upside down.
7. The bearing caps are marked with an arrow for identification purposes. The caps should be installed with the arrows pointing toward the front of the engine.

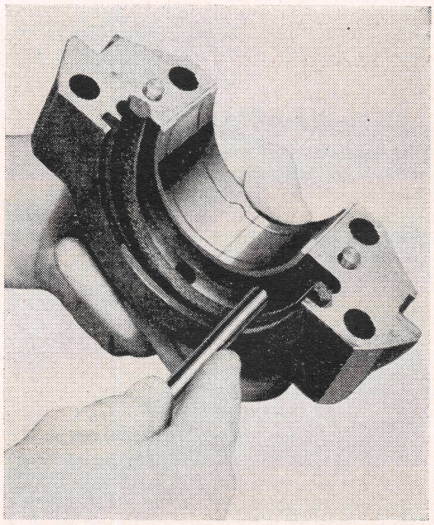

Fig. 37 Rolling oil seal in rear main bearing cap. 1952-62 Six and 1955-58 V8's

CRANKSHAFT REAR OIL SEAL

4-153, 6-230, 6-292 Engines

Both halves of the seal, Fig. 36 can be removed without removal of the crankshaft. Always replace upper and lower seal as a unit.

1. Remove oil pan and rear main bearing cap.
2. Remove seal from groove, prying from bottom with a small screwdriver.
3. Clean crankshaft surface. Then insert a new seal, well lubricated with engine oil, in bearing cap groove. *Keep oil off parting line surface as this surface is treated with glue....*
4. Gradually push with a hammer handle until seal is rolled into place.
5. To replace upper half of seal, use a small hammer and brass pin punch to tap one end of seal until it protrudes far enough to be removed with pliers. Install the new seal.
6. Install bearing cap and oil pan.

1952-62 Six & 1955-58 V8's

The rear bearing cap and crankcase have a groove into which a wick-type seal is rolled, Fig. 37. As it would be necessary to remove the engine and crankshaft to install the wick seal in the crankcase, this seal should always be renewed when new bearings are installed.

To install a new seal in the rear main bearing cap, insert the seal in the groove with the fingers. Then using a rounded tool, roll the seal down into the groove. Start at one end and roll to the center. Start again at the other end and roll to the center. The small portion of the seal which protrudes from the groove at each end should be cut off flush with a sharp knife. To prevent pulling the seal out of the groove, use a round block of wood the same diameter as the crankshaft to hold the seal firmly while cutting it off.

1959-63 V8 Rubber Seal

A neoprene seal is used in the rear main bearing cap in these engines. To change the seal (engine in vehicle) proceed as follows:

1. Remove rear bearing cap.
2. Remove oil seal from groove, prying from bottom, using a small screwdriver.
3. Clean crankshaft surface.
4. Install new seal well lubricated on lip only with engine oil and, with lip facing front of engine, with finger and thumb, roll seal in place. *Keep oil off parting line surface of seal as this is treated with glue.*
5. To replace upper half of seal, use a small hammer and tap a brass pin punch to one end of seal until it protrudes far enough to be removed with pliers.
6. Be careful of seal retainer tang while inserting a new seal so that it doesn't cut the seal.
7. Insert a new seal well lubricated with engine oil in groove. Gradually push with hammer handle until seal is rolled into place. *Keep oil off parting line surface as this surface is treated with glue.* Install bearing cap.

OIL PAN, REPLACE

1963 Four & Six Cylinder Except 292 In 10-30 Series Trucks

1. Raise front of vehicle and place on stand jacks.
2. Drain Engine oil.
3. On Powerglide only, remove starter.
4. Unfasten and remove oil pan.

6-292 In 10-30 Series Trucks

1. Raise front of vehicle and place on stand jacks.
2. Drain engine oil.
3. On powerglide only, remove starter.
4. Remove engine front mount-to-frame bracket bolt (both sides).
5. Remove radiator and shroud.
6. Raise engine enough to place a short piece of 2 x 4 between mount and frame bracket.
7. Unfasten and remove oil pan.

1952-62 Six

On Sedan Delivery models with independent front suspension, unfasten the steering idler and third arm from the frame front cross member and let the assembly drop down. Carefully note the number of shims used between the upper mounting bolt and cross member so that the same number may be installed when replacing the assembly.

On all models, the pan is removed by simply unfastening it from the block and lowering it to the floor.

V8 Engines

1. Drain the oil. On Taskmaster and Workmaster engines, remove oil level gauge, tube and seal from oil pan. Remove retaining bolts and screws and remove oil pan.
2. Clean all gasket surfaces.
3. Install rear oil pan seal in groove in rear main bearing cap. Tuck ends into groove openings in cylinder block.
4. Install side gaskets on pan rails, using grease as a retainer. Rear end of side gaskets lap rear end gasket. Tuck front ends of side gaskets into gap between front end cover seal groove and cylinder block.
5. Install oil pan front seal in groove in front end cover, with ends butting side gaskets.
6. Install oil pan and bolts.

OIL PUMP

4-153, 6-230, 6-292 Engines

The pumps used in these engines are of the positive gear type. After disassembling the pump, examine the shaft and gears for excessive wear and replace where necessary, or better still, install a new pump. When assembling the pump, be sure the ground side of the idler gear is toward the cover.

The gasket used between the pump cover and the body is special in that it controls the clearance in the pump. If the relief valve parts show wear, install new parts. Be sure that the tapered set screw which holds the pump in place is fully seated and locked with its lock nut.

1952-62 Six

The pumps used in these engines are of the positive gear type. After disassembling the pump, examine the shaft and gears for excessive wear and replace where necessary, or better still, install a new pump. When assembling the pump, be sure the ground side of the idler gear is toward the cover.

Service Note

The gasket which is used between the pump cover and the body is special in that it controls the clearance in the pump. If the relief valve parts show wear, install new parts. Be sure that the tapered set screw which holds the pump in place is fully seated and locked with its lock nut.

V8 Engines

The oil pump consists of two gears and a pressure relief valve enclosed in a two-piece housing. Inasmuch as the pump is serviced on an exchange basis no repair operations other than disassembly, cleaning and inspection are covered here.

After removing the oil pan, unfasten pump from rear main bearing cap. Disconnect pump shaft from extension by removing clip from collar. Remove pump cover and take out idler gear, drive gear and shaft.

Should any of the following conditions be found it is advisable to replace the pump assembly.

1. Inspect pump body for cracks or wear.
2. Inspect gears for wear or damage.
3. Check shaft for looseness in housing.
4. Check inside of cover for wear that would permit oil to leak past the ends of gear.
5. Check oil pick-up screen for damage to screen, by-pass valve or body.
6. Check for oil in air chamber.

Assembly

1. Place drive gear and shaft in body.
2. Install idler gear so its smooth side is toward cover.
3. Install cover and tighten screws to 6-9 lb. ft. and check to see that shaft turns freely.
4. Install pick-up screen on pipe and bend float travel control tang back in place.
5. Assemble collar end of extension shaft over pump drive shaft, aligning tang of extension shaft with slot in end of pump drive shaft. Install retaining clip with flat end in groove of drive shaft.
6. Assemble pump and extension shaft to rear main bearing cap, aligning slot on top end of extension shaft with drive tang on lower end of distributor drive shaft.
7. Install pump to rear main bearing cap bolt and tighten to 45-50 lb. ft.
8. Install oil pan.

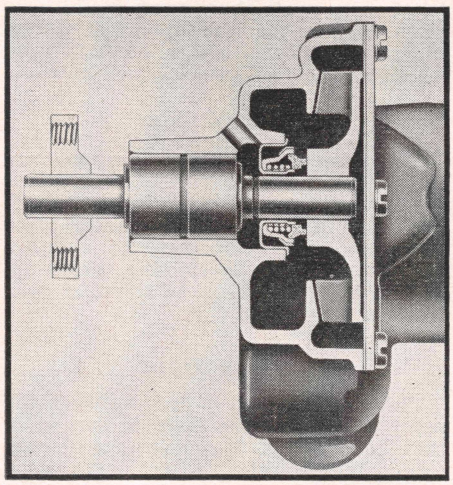

Fig. 38 Water pump. V8-265, 283, 327, 348, 409

WATER PUMP

4-153, 6-230, 6-292 Engines

1. After unfastening the pump, pull it straight out of the cylinder block to avoid damage to the impeller and shaft.
2. When disassembling the pump, support the fan hub in an arbor press and press pump shaft out of hub. A ½" x 2" bar will allow the shaft to be pushed through the hub.
3. Support pump in arbor press and press shaft and impeller out of pump, applying pressure on outer race of bearing only. *Shaft and bearing must not be pushed out of housing by applying force on shaft or bearings will be damaged. Use a ⅞" deep socket or piece of tubing 1⅛" O.D.* Shaft and bearing should be pressed out of rear of pump body only.
4. Support impeller on seal surface. Using a ½" x 2" pin, press shaft out of impeller. Discard seal.
5. When assembling pump, apply pressure to outer race of shaft bearing until it is flush with front of pump body.
6. Lightly coat O.D. of new seal with sealing compound and press into place, applying pressure to seal outer flange. Seal should bottom with outer flange against pump body.
7. Press on fan hub, being sure it is positioned so that fan belt operation will not be hampered.

1955-62 Six

The pump used on these models is similar to that used on V8 engines except that the V8 pump has a back plate. Therefore, follow the procedure outlined for the V8 pump.

To remove the pump, drain radiator and remove water inlet hose from pump. Remove fan belt. On heater-equipped models, remove hose from pump housing. Unfasten pump from engine and pull pump straight out of cylinder block to prevent damage to impeller and shaft.

Install the pump in the reverse order of removal and adjust the fan belt.

V8-265, 283, 327, 348, 409

1. Drain radiator and remove water inlet hose from pump.
2. Remove fan belt.
3. On heater equipped models, remove hose from pump housing.
4. Unfasten pump from engine and lift off.
5. Remove fan and pulley, Fig. 38.
6. Remove pump back plate.
7. Support fan hub on arbor press and press pump shaft out of hub.
8. Support pump on cylinder block face and press shaft and impeller out of pump, applying pressure on outer race of shaft bearing only. Shaft and bearing assembly must not be pushed out of housing by applying force on shaft or bearings will be damaged. Use a ⅞" deep socket or a piece of tubing 1⅛" O. D.
9. Press shaft out of impeller. Discard seal.

Assembly & Installation

Inspect all parts for wear or damage. Do not submerge shaft bearing in cleaning solvent as it is permanently sealed and lubricated.

Assemble pump in reverse order of disassembly. When installing the seal see that it bottoms with the outer flange against the pump body. The impeller should be pressed on the shaft so that there is .010" to .035" clearance between impeller vanes and pump body. See Fig. 45 for position of shaft, fan hub and impeller in pump housing.

V8-322 Engine

To remove and repair the water pump on these models, refer to Fig. 39 and proceed as follows:

1. Drain cooling system.
2. Loosen fan belt and remove fan blades, spacer and puller from hub on water pump shaft.
3. Remove fan belt.
4. Disconnect hose from water pump inlet and remove pump cover and gasket from timing chain cover.
5. Remove impeller from pump shaft, using a puller with two hooks if available. If not, a three-hook puller may be used.
6. Remove carbon washer, rubber bellows and spring from brass sleeve that is pressed into pump housing. It is not necessary to remove the brass sleeve if it is in good condition. If sleeve is doubtful, however, remove by driving it out with a punch inserted through the vent hole in pump body.
7. Thoroughly clean pump cover to remove rust, old gasket, etc. Do not soak in cleaning solvent as this may leak into pump shaft bearing and destroy the lubricant.
8. Check pump shaft bearing for end play or roughness in operation. If the bearing is not in serviceable condition, press the fan hub off the shaft, remove the bearing retainer, then press the bearing out toward the *front* of the pump cover.

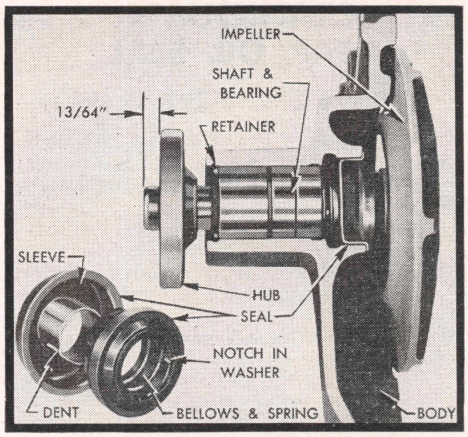

Fig. 39 Water pump. V8-322 engine

Assembly & Installation

1. If the old pump bearing was removed, press a new bearing in against the shoulder in the pump cover (long end first) and install the bearing retainer.
2. Use care to start the fan hub squarely on the front end of the shaft and press it into position $\frac{13}{64}$" from end of shaft.
3. If the old brass sleeve was removed, carefully press the sleeve of the new seal into place, using a thick walled tube of proper inside and outside diameters to bear fully against flange of sleeve. It is not necessary to remove the other seal parts from sleeve.
4. If the old sleeve was not removed, separate the new seal sleeve from seal bellows by soaking in hot water to soften the cement used to hold the seal parts together for ease of handling. Install carbon washer, bellows and spring assembly in the old sleeve in the pump body, being careful to engage the two notches in the washer with the driving dents in the brass sleeve.
5. Coat the face of the carbon washer and impeller hub with rust preventative or Seco oil. Then support the pump on the fan end of the shaft and press the impeller on the inner end of the shaft until the rear face of the impeller is flush with the end of the shaft.
6. Make sure gasket surfaces are clean. Then install pump cover with new gasket and tighten bolts uniformly.
7. Connect pump inlet hose, fill cooling system and check for leaks.
8. Install fan pulley, spacer, fan blade and belt.

RADIATOR, REPLACE

Conventional Models

After draining the radiator and removing attaching hoses, unfasten the radiator from its support and lift out. On models that use a shroud, the shroud may be pushed back and allowed to drop in back of the fan blades.

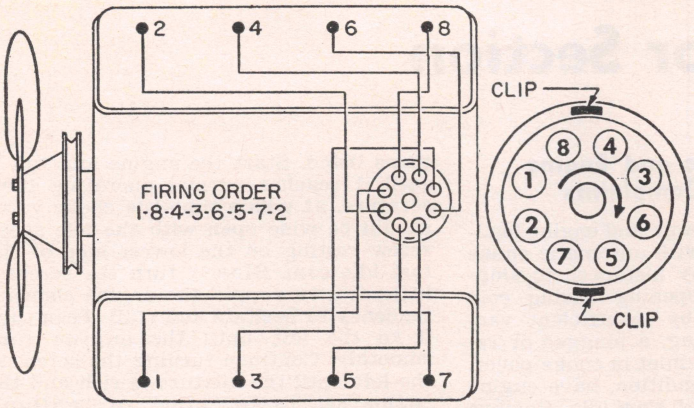

Fig. 40 Ignition details. 1955-56 V8-265

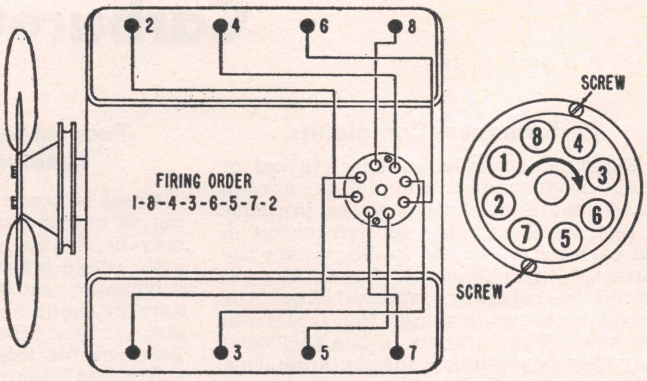

Fig. 41 Ignition details. 1957-62 V8-265, 283, 327

Cab-Over-Engine Models

Radiator removal on these models is accomplished in the same manner as on conventional models except that the hood and air cleaner must be removed.

Forward Control Models

1. Remove radiator grille.
2. Drain radiator.
3. Disconnect windshield wiper hose and the compartment light wire.
4. Disconnect horn wires at horn.
5. Remove horn and bracket.
6. Remove upper, lower and both side radiator baffles.
7. Remove radiator filler pipe hose and radiator overflow extension pipe hose.
8. Raise engine cover and prop open.
9. Disconnect radiator hoses.
10. Disconnect radiator support from frame cross member.
11. Disconnect radiator support from upper attaching brackets.
12. Remove radiator and its support.
13. Disconnect radiator from its support and remove.
14. Reverse the foregoing procedure to install.

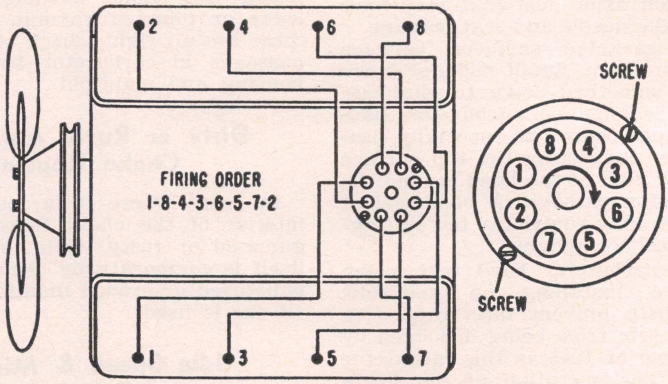

Fig. 42 Ignition details. V8-348, 409

IGNITION TIMING

If a timing light is to be used to set ignition timing, disconnect the vacuum advance pipe to the carburetor and place a piece of tape over open end of pipe. *This is important as carburetor trouble can affect timing adjustments.*

Lacking a power timing light, an accurate method of setting ignition timing with the engine stopped is with the aid of a jumper light. Be sure to use a light bulb that corresponds with the system voltage of the vehicle.

1. Remove distributor cap and rotor and see that the breaker gap is set according to specifications.
2. Rotate engine until No. 1 cylinder is at the ignition timing point as indicated by the timing pointer and timing mark being lined up with each other.
3. Connect the jumper light between ignition terminal and ground.
4. Turn on ignition switch.
5. Loosen distributor and turn it in the direction of normal rotation until the points just close (light out). Then slowly turn distributor in the opposite direction just to the exact point that the light goes on. Tighten distributor in this position. See Figs. 40, 41, 42.

1963 Service Note for "P" Series

The 4-153 and 6-230 engines have the timing pointer located on the right side of the timing cover as viewed from the front of the engine. Due to the body configuration of the "P" Series trucks, it is very difficult and dangerous to check the ignition timing from above through the engine access cover. For these reasons an additional timing pointer is installed at the front of the oil pan on all engines used in "P" Series trucks.

Timing will be a two man operation with one man using the timing light under the vehicle and the other in the cab to rotate the distributor. *Both engines will be timed to the No. 2 cylinder, using the oil pan mounted pointer.*

Carburetor Section

Performance Complaints

Flooding, stumble on acceleration or other performance complaints are in many instances caused by the presence of dirt, water or other foreign matter in the carburetor. To aid in diagnosing the cause of the complaint, the carburetor should be carefully removed from the engine without draining the fuel from the bowl. The contents of the fuel bowl may then be examined for contamination as the carburetor is disassembled.

Check the fuel in the bowl for contamination by dirt, water, gum or other foreign matter. A magnet moved through the fuel in the bowl will pick up and identify any iron oxide dust that may have caused intake needle and seat leakage.

Inspect gasketed surfaces between body and air horn. Small nicks or burrs should be smoothed down to eliminate air or fuel leakage. On carburetors having a vacuum piston, be especially particular when inspecting the top surface of the inner wall of the bowl around the vacuum piston passage. A poor seal at this location may contribute to "cutting-out on turns" complaint.

Fill the carburetor bowl with clean fuel before installing on manifold. This will help prevent dirt trapped in the fuel system from being dislodged by the free flow of fuel as the carburetor is primed. The operation of the floats and intake needle and seats may be checked under pressure if the fuel pump is used at the bench to fill the carburetor bowl. Operate the throttle several times and visually check the discharge of the pump jets.

Poor Mileage and Engine Loading Complaints

Cases of poor mileage and engine loading on carburetors with automatic choke may be due in many instances to sluggish choke valve opening during cold driveaway, caused by insufficient vacuum in choke housing, a plugged or restricted heat pipe or inlet in choke cover. To check for this condition, have engine warm and running at slow idle. Remove choke heat pipe and hold a finger over the heat inlet hole (hole is on choke housing on some carburetors). If there is little or no vacuum pull on the finger, check the choke housing for gasket leaks or plugged vacuum passages. If these are all right, check choke vacuum passages in carburetor between choke housing and manifold.

Dirty or Rusty Automatic Choke Housing

In cases where it is found that the interior of the choke housing is dirty, gummed or rusty while the carburetor itself is comparatively clean, look for a punctured or eroded manifold heat tube (if one is used).

Idle Speed & Mixture Adjustments

The initial setting of the idle mixture screw (or screws) is listed in the carburetor charts. Turn the screw clockwise by hand until it just contacts its seat lightly. Then turn it out the number of turns listed. Start the engine and run it until it reaches normal operating temperature, at which time the choke valve should be wide open with the idle speed screw resting on the lowest step of the fast idle cam. Slowly turn the screw a little at a time until the engine shows a tendency to hesitate and stall. Then turn it to the left until the engine runs smoothly. Continue turning the screw to the left until the mixture is rich and the engine starts to "lope" or "gallop". Finally turn the screw to the right until the engine runs evenly.

On two-barrel carburetors, there is an idle mixture screw for each barrel. On four-barrel carburetors there are also two idle mixture screws on the primary side of the carburetor. When idle ports are provided on the secondary side, they are non-adjustable or they are rendered non-functional by being blocked with gaskets.

When adjusting the idle mixture on two and four-barrel carburetors, adjust one screw at a time until the engine runs smoothly as directed above. Then adjust the other screw in like manner.

After the idle mixture has been adjusted, it is recommended that a tachometer (engine speed indicator) be used to adjust the slow idle speed to the rpm listed in the *Tune Up Chart*. If a tachometer is not available, adjust the idle speed screw until the engine runs smoothly without racing. If the car has an automatic transmission, place the shift lever in Drive range with hand brake off. Then very slowly increase engine speed until the car begins to creep, then back off slightly until creeping is eliminated.

ROCHESTER CARBURETOR ADJUSTMENTS

Year	Engine	Carb. Model	Part Number	Float Level	Float Drop	Pump Rod Setting	Idle Vent Setting
1953–58	6 Cyl.	B	7004468	19/32 (1)	1 3/4 (2)	None	None
1954–59	6 Cyl.	B	7005140	19/32 (1)	1 3/4 (2)	None	None
1959	6 Cyl.	B	7013029	19/32 (1)	1 3/4 (2)	None	None
1960–62	6–235	B	7015011	19/32 (1)	1 3/4 (2)	None	None
1960–62	6–261	B	7015013	19/32 (1)	1 3/4 (2)	None	None
1955	V8-265	2G	7006770	15/32 (3)	1 29/32 (4)	15/16 (5)	None
1955	V8-265	2G	7006771	15/32 (3)	1 29/32 (4)	15/16 (5)	None
1955	V8-265	2G	7008399	15/32 (3)	1 29/32 (4)	15/16 (5)	None
1956	V8-265	2G	7008389	1 1/4 (3)	1 29/32 (4)	57/64 (5)	None
1956	V8-265	2G	7008706	1 1/4 (3)	1 29/32 (4)	57/64 (5)	None
1956	V8-265	2G	7008383	1 1/4 (3)	1 29/32 (4)	57/64 (5)	None
1956	V8-265	2G	7008393	1 1/4 (6)	1 29/32 (4)	57/64 (7)	None
1957	V8's	2G	7010649	1 1/4 (3)	1 29/32 (4)	57/64 (5)	None
1957	V8's	2G	7010716	1 1/4 (3)	1 29/32 (4)	57/64 (5)	None
1957	V8's	2G	7010718	1 1/4 (3)	1 29/32 (4)	57/64 (5)	None
1957	V8's	2G	7011135	1 1/4 (3)	1 29/32 (4)	57/64 (5)	None
1957	V8's	2G	7012147	1 1/4 (3)	1 29/32 (4)	57/64 (5)	None
1957	V8's	2G	7011132	1 1/4 (3)	1 29/32 (4)	57/64 (5)	None
1957	V8's	2G	7008394	1 15/64 (6)	1 29/32 (4)	57/64 (7)	None

ROCHESTER NOTES

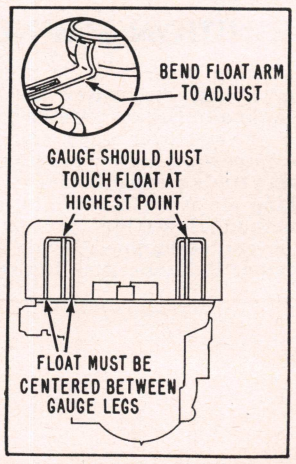

Fig. (1)—Model B float level.

CARTER NOTES

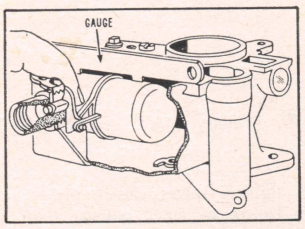

Fig. ①—Float level. Measure from top of float to top surface of lower body.

②—Outer hole (long stroke) for winter; inner hole for summer.

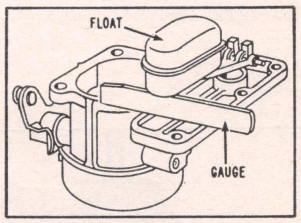

Fig. ③—YF float level. Measure from bowl cover (without gasket) to top of float.

CARTER CARBURETOR ADJUSTMENTS

Year	Carb. Model	Idle Screw Turns Open	Float Level	Float Drop	Pump Setting	Metering Rod Setting	Fast Idle Setting	Unloader Setting	Choke Setting
1963	YF-3402S	½–2	⅜③	1 3/16④	⑤	⑥	None	None	None
1963	YF-3379S	½–2	⅜③	1 3/16④	⑤	⑥	None	None	None
1953–62	Updraft	½–1½	0 to 1/32①	None	②	None	None	None	None
1953	YF-2100S	½–1½	9/32③	1¼④	⑤	⑥	⑦	None	None
1953–56	YF-2101S	1–2	9/32③	1¼④	⑤	⑥	.040⑧	¼⑨	1 Rich

④—With bowl cover held upright, measure from free end of float to bowl cover. Adjust by bending stop tabs on float arm.

⑤—With throttle valve seated, press down on upper end of diaphragm shaft until it bottoms. Metering rod arm should now contact pump lifter link at outer end nearest springs. Adjust by bending pump connector link at lower angle.

⑥—With throttle valve seated, press down on upper end of diaphragm shaft until diaphragm bottoms in vacuum chamber. Metering rod should contact bottom of metering rod well and metering rod arm should contact lifter link at outer end nearest springs and at supporting lug. Adjust by bending lip of metering rod arm to which rod is attached.

⑦—With choke held wide open, lip on fast idle arm should contact boss on body casting. Adjust by bending offset portion of choke connector link.

⑧—With choke housing and baffle plate removed, crack throttle valve and hold choke valve closed; then close throttle. With choke valve held closed and slight tension on throttle lever, there should be the clearance listed between throttle valve and carburetor bore (side opposite idle port). Adjust by bending connector link at lower angle.

⑨—Hold throttle valve wide open and close choke valve as far as possible without forcing. There should be the clearance listed between lower edge of choke valve and inner wall of air horn. Adjust by bending arm of choke trip lever.

ROCHESTER NOTES continued

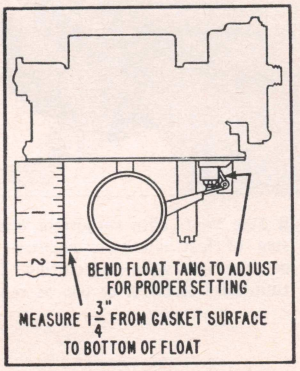

Fig. ②—Model B float drop.

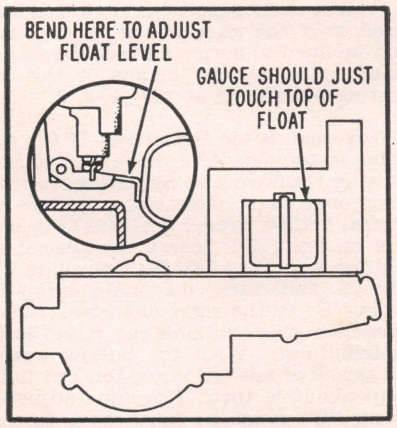

Fig. ③—Model 2G float level.

ROCHESTER CARBURETOR ADJUSTMENTS continued

Year	Engine	Carb. Model	Part Number	Float Level	Float Drop	Pump Rod Setting	Idle Vent Setting
1957–58	V8-322	2G	7011155	1 15/64⑥	1 29/32④	57/64⑦	None
1957	V8's	2G	7010717	1¼⑥	1 29/32④	57/64⑦	None
1957–58	V8-283	2G	7011143	1¼⑥	1 29/32④	57/64⑦	None
1957	V8's	4G	7009661	1⅝⑨	2¼⑩	1 1/16⑫	31/32⑬
1957	V8's	4G	7009662	1 35/64⑨	2¼⑩	1 1/16⑫	31/32⑬
1957	V8's	4G	7011161	1⅝⑨	2¼⑩	1 1/16⑫	31/32⑬
1957	V8's	4G	7011162	1 35/64⑨	2¼⑩	1 1/16⑫	31/32⑬
1958	V8-283	2G	7012233	1 19/64⑥	1 29/32④	57/64⑦	49/64⑧
1958	V8-283	2G	7012457	1 19/64⑥	1 29/32④	57/64⑦	49/64⑧
1958	V8-283	2G	7012035	1 19/64⑥	1 29/32④	57/64⑦	49/64⑧
1958	V8-283	2G	7012047	1 19/64⑥	1 29/32④	57/64⑦	49/64⑧
1958	V8-283	2G	7012453	1 19/64⑥	1 29/32④	57/64⑦	49/64⑧
1958	V8-283	2G	7012455	1 19/64⑥	1 29/32④	57/64⑦	49/64⑧
1958	V8-283	4G	7012303	⑪	2¼⑩	1 1/16⑫	31/32⑬
1958	V8-283	4G	7011487	⑪	2¼⑩	1 1/16⑫	31/32⑬
1958	V8-348	4G	7012145	⑪	2¼⑩	1 1/16⑫	31/32⑬
1959	V8-283	2G	7013009	1 23/64⑥	1 29/32④	57/64⑦	49/64⑧
1959–62	V8-283	2G	7013011	1 23/64⑥	1 29/32④	57/64⑦	49/64⑧
1959	V8-283	2G	7013013	1 23/64⑥	1 29/32④	57/64⑦	49/64⑧
1959	V8-348	2G	7013353	1 23/64⑥	1 29/32④	57/64⑦	49/64⑧
1959	V8-283	4G	7013023	⑭	2¼⑩	1 1/16⑫	31/32⑬
1959	V8-283	4G	7013021	⑭	2¼⑩	1 1/16⑫	31/32⑬
1959–60	V8-348	4G	7013025	⑭	2¼⑩	1 1/16⑫	31/32⑬
1960–62	V8-283	2G	7015015	1 23/64⑥	1 29/32④	57/64⑦	49/64⑧
1960–61	V8-283	2G	7015017	1 23/64⑥	1 29/32④	57/64⑦	49/64⑧
1960–61	V8-348	2G	7015019	1 23/64⑥	1 29/32④	57/64⑦	49/64⑧
1960–61	V8-348	4G	7015025	⑭	2¼⑩	1 1/16⑫	31/32⑬

continued

ROCHESTER CARBURETOR ADJUSTMENTS Continued

Year	Engine	Carb. Model	Part Number	Float Level	Float Drop	Pump Rod Setting	Idle Vent Setting
1962–63	V8–327	2G	7020109	1 23/64 ⑥	1 29/32 ④	57/64 ⑦	None
1962–63	V8–348	4G	7020025	⑭	2 1/4 ⑩	1 1/16 ⑫	None
1962–63	V8–409	4G	7020029	⑭	2 1/4 ⑩	1 1/16 ⑫	None
1963	6–230	B	7023021	1 19/32 ①	1 3/4 ②	None	.050 ⑮
1963	6–230	B	7023011	1 19/32 ①	1 3/4 ②	None	.050 ⑮
1963	6–230	B	7023017	1 19/32 ①	1 3/4 ②	None	.050 ⑮
1963	6–292	B	7023013	1 19/32 ①	1 3/4 ②	None	.050 ⑮
1963	V8–283	2G	7023010	1 23/64 ⑥	1 29/32 ④	57/64 ⑦	None
1963	V8–283	2G	7023009	1 23/64 ⑥	1 29/32 ④	57/64 ⑦	None

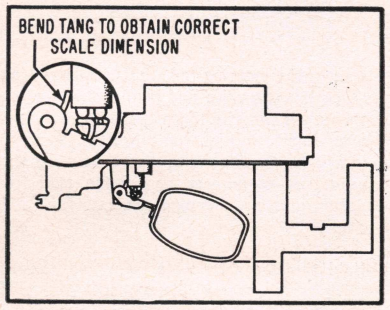

Fig. ④—Model 2G float drop.

⑤—Back off throttle stop screw and hold throttle valves completely closed. Distance from top of air horn casting to top of pump rod should be as listed. Adjust by bending pump rod at the angle.

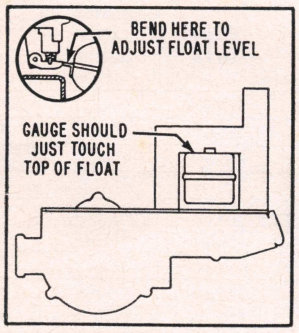

Fig. ⑥—Model 2G float level.

⑦—Back off throttle stop screw and hold throttle valves completely closed. Distance from top of pump housing to top of pump rod should be as listed. Adjust by bending pump rod at the angle.

⑧—Slowly open throttle valves until vent valve just closes. With throttle valves held in position, distance from top of pump housing to top of pump rod should be as listed. Adjust by bending tang on pump lever.

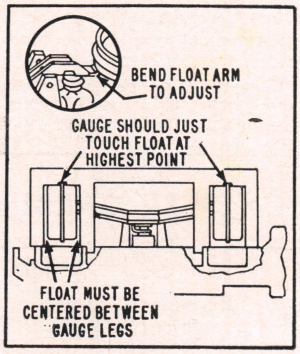

Fig. ⑨—Model 4G float level.

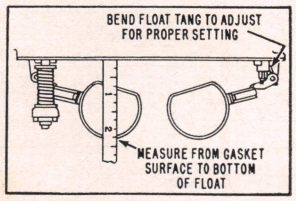

Fig. ⑩—Model 4G float drop.

⑪—See ⑨. Primary 1 5/8", secondary 1 11/16".

⑫—With throttle valves closed, distance from air horn to top of pump plunger shaft should be as listed. Adjust by bending pump rod.

⑬—Open throttle valves to a point where the vent valve is just closed. With throttle valves held in this position, distance from air horn to top of pump plunger shaft should be as listed. Adjust by bending tang on pump lever.

⑭—See ⑨. Primary 1 5/8", secondary 1 11/16".

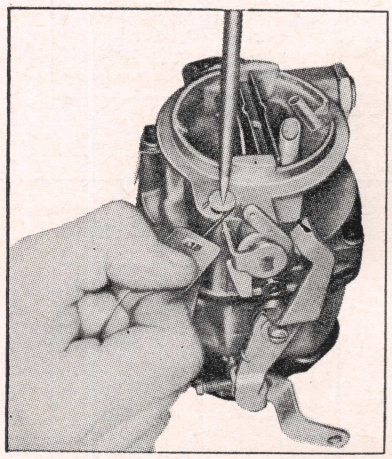

Fig. ⑮—B Idle Vent: With carburetor lever on low step of fast idle cam, measure clearance between vent valve and casting. To adjust, turn valve screw in or out as required.

CARBURETOR GOVERNOR

Velocity Type

This governor, Fig. 1, is available on all truck models with the exception of the ¾ and 1 ton Forward Control. The governor is mounted between the carburetor and intake manifold and automatically governs the maximum speed at which the engine may be operated.

The gas mixture rushing from the carburetor through the governor throat strikes the offset throttle valve and tends to draw it closed. This action is opposed by a governor spring which is attached to the valve shaft through a cam ribbon and cam. By adjusting the pull of this spring, the governor valve may be made to remain open, and then closed at a predetermined engine speed. Adjustment of the spring pull is accomplished by changing number of coils operating.

Governor Adjustment

All governors are calibrated and adjusted in assembly to insure accurate control of the maximum engine speed of the model vehicle for which it is intended. However, there will be occasions when minor adjustments are required to satisfy local conditions.

To adjust a governor for higher speed, turn the adjusting cap counter-clockwise or to the left; for lower speeds turn the cap to the right or clockwise. One turn on the adjusting screw will change the speed 300-400 rpm or 4 and 5 mph.

When a more sensitive regulation is desired or if the governor is too sensitive and inclined to surge, correct the adjustment as follows by means of the calibrating nut shown at "A", Fig. 2.

If Governor is too Sensitive—If the governor is too sensitive or on the point of surging, remove the adjusting cap and hexagonal shaft assembly and place the special hollow wrench (A-24283) in position on nut "A". Insert the special adjusting wrench (A-25264) through this wrench and turn the main adjusting screw "B" to the right one turn. (These wrenches are available at King-Seeley Distributors.) With the hollow wrench in the slot of nut "A", turn this nut to the right about ¼ turn. The main adjusting screw "B" must be kept from turning while nut "A" is adjusted.

If Governor is Not Stable—If a more sensitive governor is desired, adjust main screw "B" to the left one turn and, while holding this screw in the new position, turn nut "A" to the left ¼ turn at a time until the desired regulation is obtained. When the adjustment is completed, tap lightly on the end of the hollow wrench so that nut "A" will seat properly.

Vacuum Spinner Type

This type governor, Fig. 3, is a mechanically-driven vacuum-actuated mechanism set to govern engine speed at 4000 rpm maximum under full load

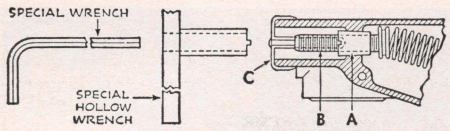

Fig. 2 Governor adjustment. Six-cyl.

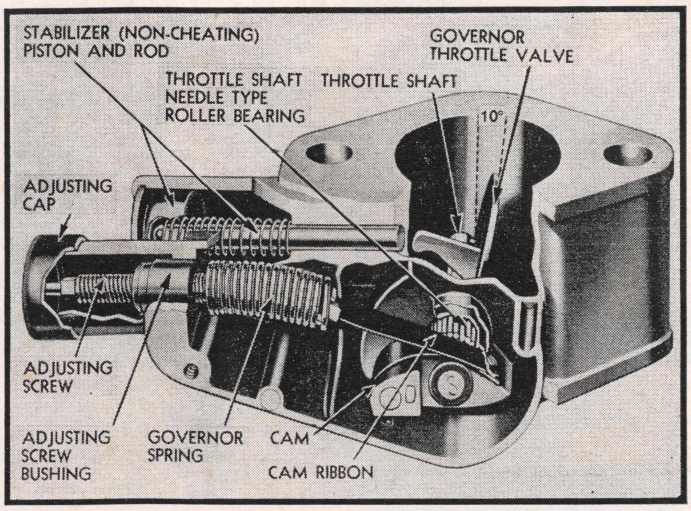

Fig. 1 Cutaway view of carburetor governor. Six-cylinder

conditions. The governor is comprised of two basic units: the centrifugal control valve housed in the distributor and a carburetor actuator which is mounted on the carburetor throttle body. These two components are inter-connected by tubing.

The throttle lever is connected to the throttle shaft in such a manner that turning the throttle lever does not actually force the throttle valves open but rather allows them to follow the throttle lever because of the governor spring tension. Thus when the throttle lever is moved to wide open position, the position of the throttle valve will be determined by vacuum on the diaphragm and the tension of the governor or spring acting on the governor lever.

Vacuum and free operation are two keys to correct operation of the Rochester governor. If all the parts are free to move as intended, and there are no vacuum leaks, the unit will operate correctly.

Governor Adjustment

Since governing speed is a function of both the distributor "spinner" and the carburetor actuator, the only positive method of accurately setting speed is to adjust the spinner on the vehicle. For extremely accurate full throttle governing, road testing is necessary. However, for practical purposes, it can be assumed full throttle governed speed will be about 200 rpm below no load governed speed, and adjustment can be made by "revving" the engine against the governor with the vehicle in neutral.

To increase governing speed turn the nut on the spinner shaft (in distributor) clockwise, Fig. 3. To lower governing speed turn nut counterclockwise.

If the governing system is to operate satisfactorily for long periods, the vacuum passages must be kept free from dirt. To insure this, the carburetor air cleaner should be cleaned often enough to prevent its saturation with dirt to the extent that the governing system cannot obtain its supply of clean air. The cover bands or plugs, whichever are used to seal the "spinner" compartment should always be properly and tightly in place whenever the vehicle is in operation. Since a slight partial vacuum always exists in this compartment, dirt could be pulled into the spinner unit if air leakage is permitted.

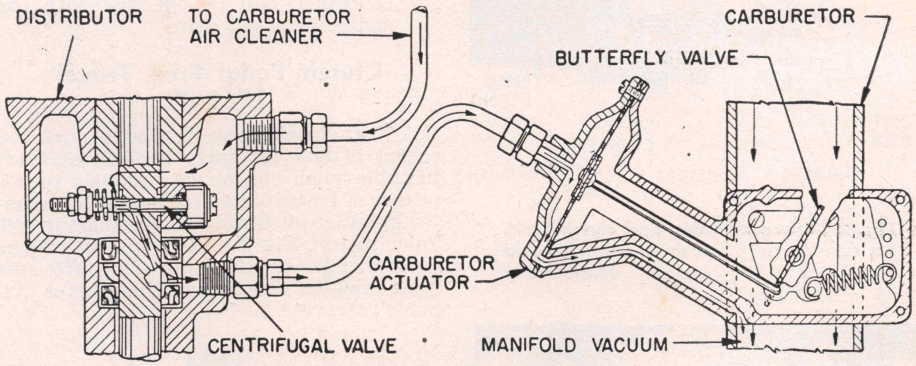

Fig. 3 Vacuum spinner type governor. Rochester 2G carburetor; typical of 4G

Clutch Section

HYDRAULIC CONTROLS

1960-63

Hydraulic operated clutch controls are used on all models except Forward Control to release both the Coil Spring Clutch and the Diaphragm Spring Clutch. Fig. 1 shows a dual master cylinder, one side for clutch operation and the other for brake. A single clutch master cylinder is used in conjunction with air brakes.

When the clutch pedal is depressed, brake fluid is forced from the master cylinder, Fig. 1, into the slave cylinder, Fig. 2, and the slave cylinder push rod moves the clutch release lever. When the clutch pedal is released, fluid from the slave cylinder feeds back to the master cylinder.

A "bleeder" fitting is provided on the slave cylinder and the procedure for bleeding the system is similar to that used on the brake system. Fluid level in the master cylinder should be maintained ½" below the top of the cylinder.

Clutch Pedal, Adjust

Two adjustments are necessary: pedal total travel, and pedal free travel. The

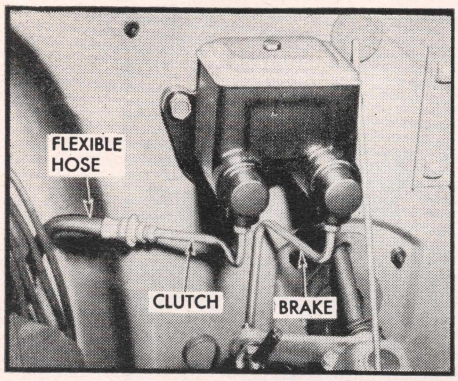

Fig. 1 Dual master cylinder for clutch and brake operation. 1960-63

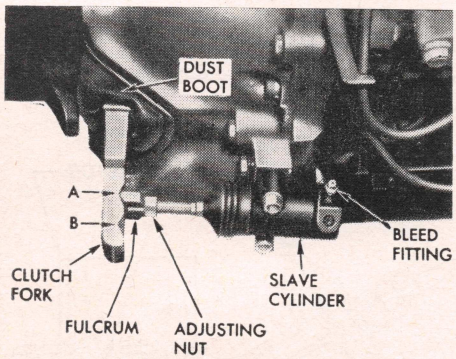

Fig. 2 Slave cylinder and clutch fork. Be sure to note which fulcrum is used ("A" or "B") before disassembly

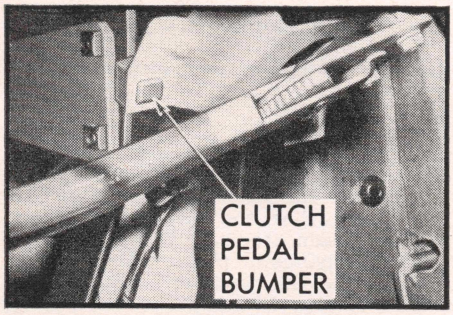

Fig. 3 Clutch pedal bumper. 1960-62

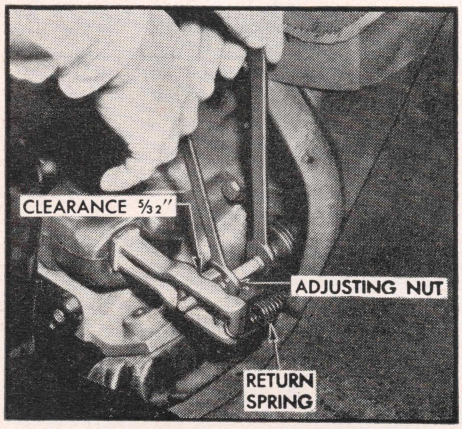

Fig. 4 Adjusting slave cylinder push rod. 1960-63

master cylinder must be filled to ½" below the top of the reservoir and the system must be free of air.

Clutch Pedal Total Travel

1. On 1960-62, loosen clutch pedal bumper, Fig. 3, so clutch pedal pad, in the fully released position, is even with the brake pedal pad (except on 1961 Series 60 through 80 in which brake pedal is ⅝" higher).
2. On all models disconnect clutch fork return spring.
3. Bottom the slave cylinder push rod and piston by pushing the slave cylinder push rod to the front of the vehicle as far as it will go, Fig. 4.
4. Pull clutch fork toward rear of vehicle until the throwout bearing touches the pressure plate release levers.
5. Adjust clearance between slave cylinder push rod fulcrum ("V" block), Fig. 2, by adjusting the nut behind it to $\frac{5}{32}$" clearance between fulcrum pivot and clutch fork, Fig. 4. This clearance can be checked with the shank of a $\frac{5}{32}$" drill.

Clutch Pedal Free Travel 1960-62

Adjust clutch master cylinder push rod eccentric bolt on early models and adjustable push rod on late models to obtain free travel between the clutch master cylinder push rod and the master cylinder piston, Fig. 5. This will insure the master cylinder piston moving sufficiently to uncover the port in the master cylinder reservoir.

1963

Adjust clutch master cylinder adjustable push rod to obtain free travel between push rod and master cylinder piston. This will amount to ⅛" free pedal travel measured at the center line of the clutch pedal pad just before the clutch push rod touches the master cylinder piston.

Adjust 1961 Tilt Cab Over-Center Linkage

1. Disconnect over-center push rod extension from over-center lever.
2. Adjust clutch slave cylinder push rod to clutch fork clearance as outlined above for conventional models.
3. With over-center spring installed and over-center lever against stop, adjust over-center push rod extension clevis so rod end freely enters hole in over-center lever. Secure adjustment.

CLUTCH PEDAL, ADJUST

1955-62 Mechanical Linkage

Free travel of the clutch pedal should be maintained at from ¾" to 1". To adjust, loosen the lock nut, Fig. 6, and turn the adjusting nut until the proper free pedal travel is obtained.

Check the free pedal travel with one finger on the pedal and not with the foot as the adjustment is sensitive.

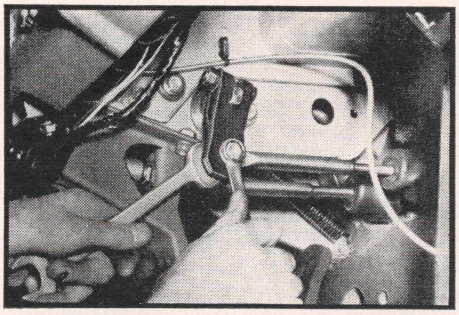

Fig. 5 Adjusting clutch push rod (eccentric method). 1960-62

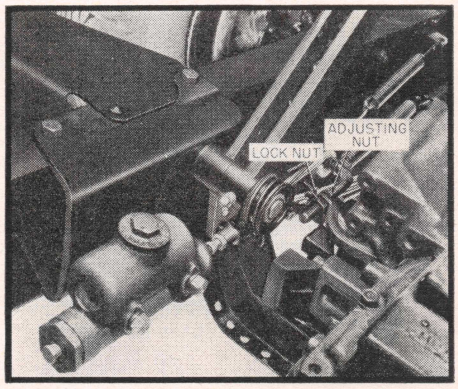

Fig. 6 Clutch pedal free travel adjustment. 1955-62 with mechanical linkage

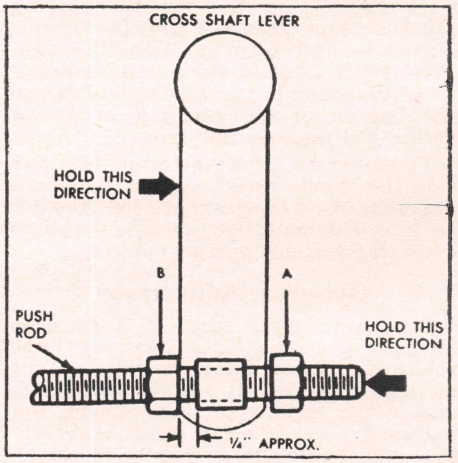

Fig. 7 Clutch pedal free travel adjustment. 1963 with mechanical linkage

1963 Mechanical Linkage

1. Disconnect clutch fork return spring at fork.
2. Loosen nut "A", Fig. 7, and back off from swivel about ½".
3. Hold clutch fork push rod against fork to move clutch release bearing against clutch fingers (push rod will slide through swivel at cross-shaft).
4. Adjust nut "B" to obtain $\frac{3}{16}$ to ¼" clearance between nut "B" and swivel.
5. Release push rod, connect return spring and tighten nut "A" to lock swivel against nut "B".
6. Check free pedal travel which should be ¾ to 1".

CLUTCH SERVICE

1. Remove transmission as outlined further on.
2. On models with hydraulic clutch control disconnect slave cylinder from clutch fork.
3. Remove clutch throwout bearing from fork.
4. Remove clutch fork by pressing it away from its ball mounting with a screwdriver until the fork snaps loose from the ball.
5. Support clutch assembly during removal with a suitable pilot tool.
6. Loosen clutch attaching bolts one turn at a time to prevent distortion of clutch cover until diaphragm spring is released.
7. Remove clutch pilot tool and clutch from vehicle.

Manual Shift Transmission Section

For Clark, Fuller, New Process, Spicer and Warner transmissions used on Chevrolet trucks, see the "name" chapter for service procedures and lubricant capacities

Chevrolet Trans. Index & Lube Capacities

Trans. Type	Oil, Pints
3 Speed	2
4 Speed	6¼
Power Divider and Auxiliary Trans.	①

①—Fill to bottom of filler plug hole

CHEVROLET 3 SPEED, 1955-63

Remove & Replace

1. Disconnect speedometer cable, and the shift control rods from the levers at the transmission.
2. Split the rear universal joint and remove the propeller shaft and front universal joint.
3. Remove the two top transmission-to-clutch attaching bolts and insert guide studs in their place.
4. Remove the two lower attaching bolts and slide the transmission straight back on the guide studs until the clutch gear is free of the splines in the clutch disc.
5. Remove the transmission from under the chassis.
6. Reverse the above procedure to install the transmission, using the guide studs to prevent the weight of the transmission from hanging on the clutch disc.

Disassemble

1. Remove side cover and gasket, Fig. 1.
2. Remove main drive gear bearing retainer and remove the main drive gear and bearing.
3. Remove 24 roller rear pilot bearings, 2 washers and 14 roller front bearings.
4. Unfasten extension housing from transmission case and pull extension and mainshaft out of transmission case, leaving the synchronizer and first and reverse gear in case.
5. Remove synchronizer clutch sleeve and first and reverse gear through side opening in case.
6. Remove countershaft by driving it from front to rear of case, using a soft steel drift. Remove the countergear rollers and thrust washers.
7. Remove the countergear.
8. Drive the idler shaft lock pin into the shaft. This pin is shorter than the diameter of the shaft so the shaft may be slipped out when the pin is driven in.
9. Using a drift pin, tap rear of idler shaft to drive out plug ahead of shaft. Do not turn the shaft while removing as the lock pin may drop down between the idler gear bushings.
10. Remove reverse idler gear and thrust washers.
11. To remove the mainshaft from the extension, expand the bearing snap ring and tap the rear of the shaft with a soft hammer to bring the shaft, speedometer drive gear, second speed gear and bearing out of the extension as an assembly.

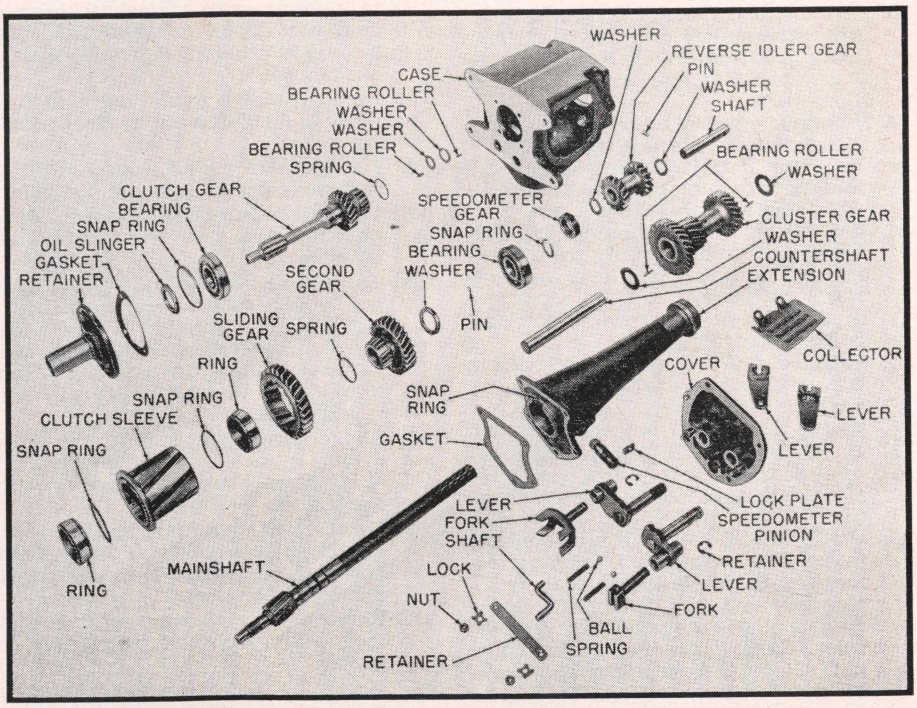

Fig. 1 Exploded view of 1955-63 standard three speed transmission

Mainshaft, Disassemble

1. Press speedometer gear off mainshaft, using suitable split plates in an arbor press.
2. Remove bearing-to-mainshaft snap ring and press bearing off shaft.
3. Remove second speed gear thrust washer, pull drive pin out of shaft and remove second speed gear.

Mainshaft, Assemble

1. Slide second speed gear on mainshaft, insert drive pin in shaft and install thrust washer against gear.
2. Install new bearing with groove in outside diameter of bearing toward second speed gear.
3. Select one of four available snap rings so end play of bearing on shaft is a maximum of .004". This may be determined by installing succes-

sively larger rings. Use the thickest ring that will enter snap ring groove on shaft.

4. Start speedometer drive gear on shaft with chamfered inside diameter of gear toward bearing. Press gear on shaft until forward face of gear is 7/8" from rear face of bearing.

CHEVROLET 4 SPEED

Remove & Replace

1. Remove screws which fasten steering jacket grommet to floor and slide grommet up on jacket out of the way.
2. Remove accelerator pedal and floor mat.
3. Remove sheet metal screws attaching transmission cover to body floor and remove cover. On Forward Control models, remove front and rear floor pans.
4. Remove speedometer cable from transmission rear bearing retainer.
5. On 1 ton models, remove cotter key and pin attaching parking brake pull rod assembly to parking lever.
6. On 1½ and 2 ton, disconnect parking brake lever return spring from parking brake operating lever and remove cotter key and pin attaching inner and outer levers to parking brake operating lever.
7. Remove parking brake lever lock, flat washer and spring and remove parking brake lever.
8. Drain lubricant from transmission.
9. On 1 ton models, break universal joint at transmission universal joint flange and tape bearings in the trunnions.
10. On 1½ and 2 ton models, disconnect intermediate universal joint by removing the two trunnion bearing U-clamps, split the joint and lower front end of rear propeller shaft to floor. Remove four universal flange nuts. Remove nuts attaching propeller shaft bearing support bracket to frame cross member and remove front propeller shaft and bearing assembly.
11. Remove two upper capscrews attaching transmission to clutch housing and install guide pins in these holes.
12. Remove flywheel underpan and remove two lower transmission-to-clutch housing bolts.
13. Slide the transmission straight back on the guide pins until the clutch gear is free of the splines of the clutch disc.
14. Remove transmission from vehicle.
15. Reverse the foregoing procedure to install the transmission, being sure to use the guide pins to prevent the transmission from hanging on the clutch disc.

Disassemble

1. Refer to Fig. 2 and remove transmission cover.
2. Remove reverse shifter lever bolt nut, screw bolt out of case and remove reverse shifter lever, spacer and flat washer.
3. Remove clutch gear bearing retainer and gasket and, with a puller, pull clutch gear from case. *Index cut-out section of clutch gear with countershaft driven gear to obtain clearance in removing clutch gear and shaft.*
4. Remove clutch gear synchronizer cone and transmission mainshaft pilot bearing roller spacer from end of mainshaft.
5. Remove speedometer driven gear from rear bearing retainer.
6. Place transmission in two gears at once to lock gears and remove universal joint flange retaining screw, lockwasher, plain washer and universal joint front flange.
7. Remove rear bearing retainer and gasket.
8. To remove mainshaft assembly the entire assembly must be pulled back to remove rear mainshaft bearing from case. Use a suitable puller (tool No. J-2667) to pull shaft and bearing out of case.
9. Remove puller from case and then move mainshaft back as far as it will go.
10. Use suitable puller (tool J-1619) to remove rear bearing from mainshaft.
11. With first and second speed sliding gear forward, raise front end up and lift shaft out of case.
12. To remove reverse idler gear, drive out shaft retaining pin, using a small punch. This pin is driven into the shaft, after which the shaft may be driven out of the case from front to rear. With shaft removed, take reverse idler gear from case.
13. To remove countershaft assembly, drive a punch through the countershaft front bearing spacer and pry out spacer.
14. Drive countershaft to the rear of the case, using a brass drift on the front end of the shaft, until rear bearing is driven out of case.
15. Remove rear bearing retainer bolt lock plate, retainer bolts and retainer.
16. Using a suitable bearing puller, remove rear bearing and oil deflector from rear end of countershaft.
17. Raise front end of countershaft and lift assembly from case.
18. Remove transmission chip collector from bottom of transmission case.

Clutch Gear

Remove mainshaft pilot bearing rollers from clutch gear and take roller retainer from recess in shaft. Place clutch shaft in a vise and, with a suitable spanner wrench (tool J-2670), remove bearing retaining nut, oil slinger and oil deflector. Use an arbor press to press gear and shaft out of bearing.

To assemble, press bearing on shaft. Then install oil deflector, oil slinger and retaining nut, noting that nut is designed to fit contour of oil slinger. When installing foregoing parts, make sure oil deflector centers around retainer nut hub. Place clutch shaft in vise and tighten retainer nut securely and stake in place. Apply a small amount of grease to bearing surfaces in shaft recess. Install 18 pilot bearing rollers and roller retainer. This retainer holds bearings in position and when transmission is assembled it is pushed forward into recess by mainshaft pilot.

Mainshaft, Disassemble

1. Remove clutch hub retainer ring from pilot end of mainshaft.
2. Support assembly on sliding gear in arbor press and press mainshaft out of gear cluster.
3. Remove clutch key springs from third and fourth speed clutch hub and remove sleeve from hub, being sure to account for three clutch keys.
4. Remove synchronizer cone from third speed gear.
5. Remove bushing from third speed gear and remove gear. *Second speed thrust washer goes between third and second speed gears.*
6. Remove second speed gear from synchronizer ring lugs.
7. Remove synchronizer ring retainer and synchronizer ring from first speed gear.

Mainshaft, Inspect

After washing all parts, proceed as follows:

1. Inspect mainshaft for scoring or excessive wear at thrust surfaces or splines.
2. Inspect clutch hub and sleeve for excessive wear and make sure sleeve slides freely on clutch hub. Also check fit of clutch hub on mainshaft splines. The third and fourth speed clutch sleeve should slide freely on the clutch hub but the clutch hub should be a snug fit on the mainshaft splines.
3. Inspect third speed gear thrust surfaces for excessive scoring and third speed gear bushing for excessive wear. The third speed gear must be a running fit on the mainshaft bushing and the bushing should be a press fit on the shaft.
4. Check second speed thrust washer for excessive scoring.
5. Inspect second speed gear for excessive wear at the thrust face or in the bronze bushing. Check synchronizer springs for looseness or breakage. Synchronizer springs may be replaced by removing the rivets and installing a new spring with new special rivets. If bushing is worn excessively, the gear assembly must be replaced.
6. Inspect second speed gear synchronizing ring for excessive wear.
7. Inspect bronze synchronizer cone in first speed gear for excessive wear or damage. Also inspect clutch gear synchronizer cone and third speed gear synchronizer cone for excessive wear or damage.
8. First speed sliding gear must be a sliding fit on mainshaft splines.
9. Inspect all gear teeth for excessive wear.

Mainshaft, Assemble

1. Install second speed gear synchronizing ring into first speed gear and install synchronizing ring retainer. Make sure ring retainer is seated fully in snap ring groove of first speed gear, Figs. 3 and 4.

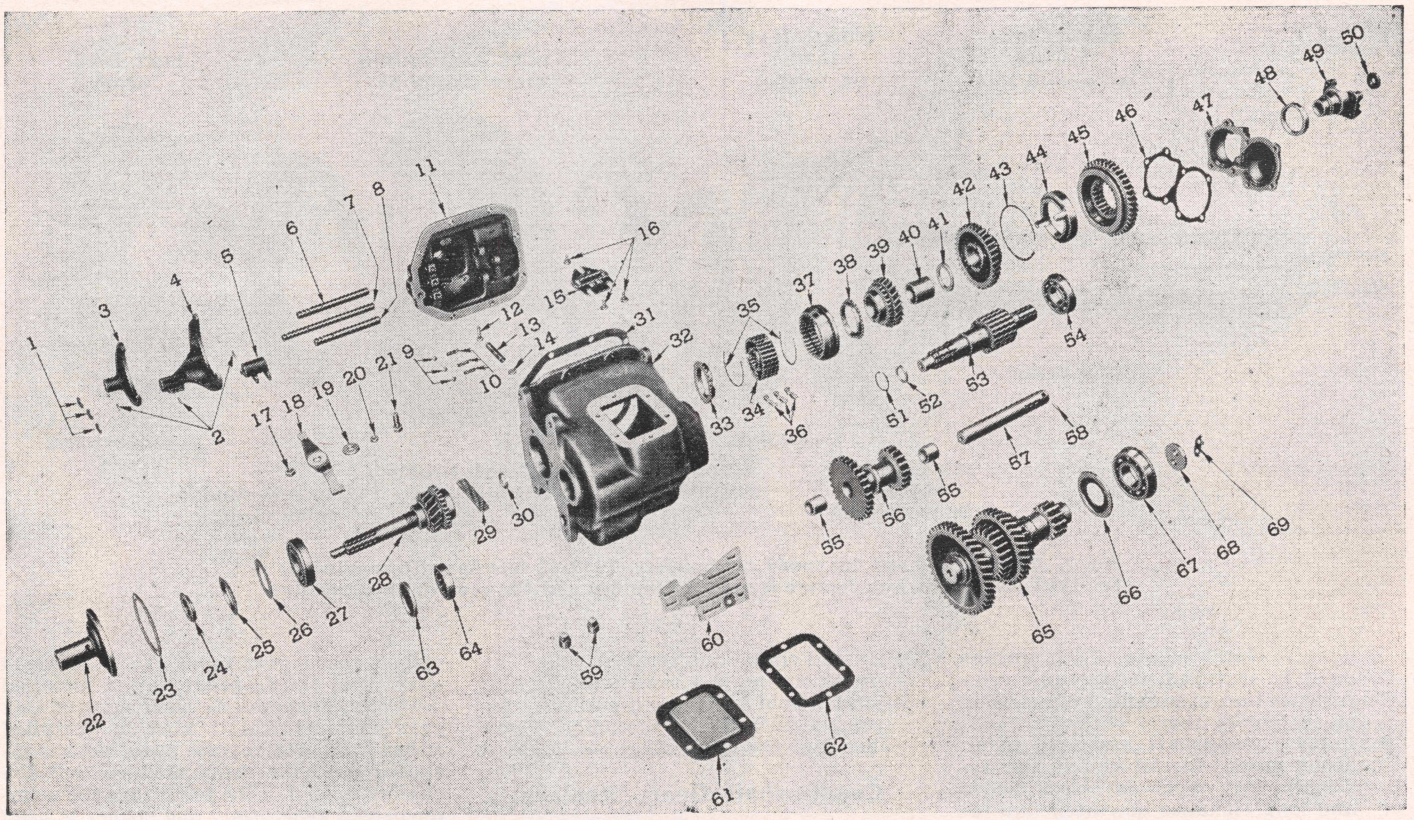

Fig. 2 Exploded view of four speed synchromesh transmission

1. Expansion plug
2. Taper pin
3. Third and fourth speed shifter yoke
4. First and second speed shifter yoke
5. Reverse shifter head
6. Third and fourth speed shifter shaft
7. First and second speed shifter shaft
8. Reverse shifter shaft
9. Yoke lock ball
10. Yoke lock ball spring
11. Transmission cover
12. Reverse shifter compression spring
13. Reverse shifter compression spring pin
14. Expansion plug
15. Shifter interlock assembly
16. Shifter interlock pin
17. Nut
18. Reverse shifter lever
19. Flat washer
20. Reverse shifter lever spacer
21. Bolt
22. Clutch gear bearing retainer
23. Gasket
24. Clutch gear bearing retainer nut
25. Clutch gear bearing oil slinger
26. Clutch gear bearing deflector
27. Clutch gear bearing
28. Clutch gear
29. Mainshaft pilot roller bearings
30. Roller bearing retainer
31. Transmission cover gasket
32. Transmission case
33. Clutch gear synchronizer cone
34. Third and fourth speed clutch hub
35. Third and fourth speed clutch key spring
36. Third and fourth speed clutch key
37. Third and fourth speed clutch sleeve
38. Third speed gear synchronizer cone
39. Third speed gear
40. Third speed gear mainshaft bushing
41. Second speed gear thrust washer
42. Second speed constant mesh gear
43. Second speed gear synchronizing ring retainer
44. Second speed gear synchronizing ring
45. First and reverse gear
46. Rear bearing retainer gasket
47. Transmission rear bearing retainer
48. Oil seal
49. Universal joint front flange
50. Flat washer
51. Third and fourth speed clutch hub retainer ring
52. Mainshaft pilot roller bearing spacer
53. Mainshaft
54. Mainshaft bearing
55. Reverse idler bushing
56. Reverse idler gear
57. Reverse idler gear shaft
58. Taper pin
59. Drain and filler plugs
60. Chip collector
61. Power take-off cover
62. Power take-off cover gasket
63. Countershaft front bearing spacer
64. Countershaft front roller bearing
65. Countershaft assembly
66. Countershaft rear bearing oil deflector
67. Countershaft rear bearing
68. Countershaft rear bearing retainer
69. Lock plate

2. Install first speed sliding gear on mainshaft splines with synchronizing ring toward front of shaft.
3. Install second speed gear on shaft with synchronizer springs toward synchronizing ring in first speed gear. Position gear so two cut-out sections index with prongs on synchronizing ring.
4. Install second speed gear thrust washer.
5. Install third speed gear bushing on mainshaft until it bottoms on second gear thrust washer.
6. Check second speed gear end play which should be .009″ to .015″.
7. Install third speed gear over mainshaft bushing and place synchronizing cone on taper of third speed gear.
8. Install clutch sleeve over clutch hub with taper toward long shoulder on hub and drop the three clutch keys into position. Install clutch key springs, one on each side of clutch hub, making sure springs fit under the clutch keys to hold them out.

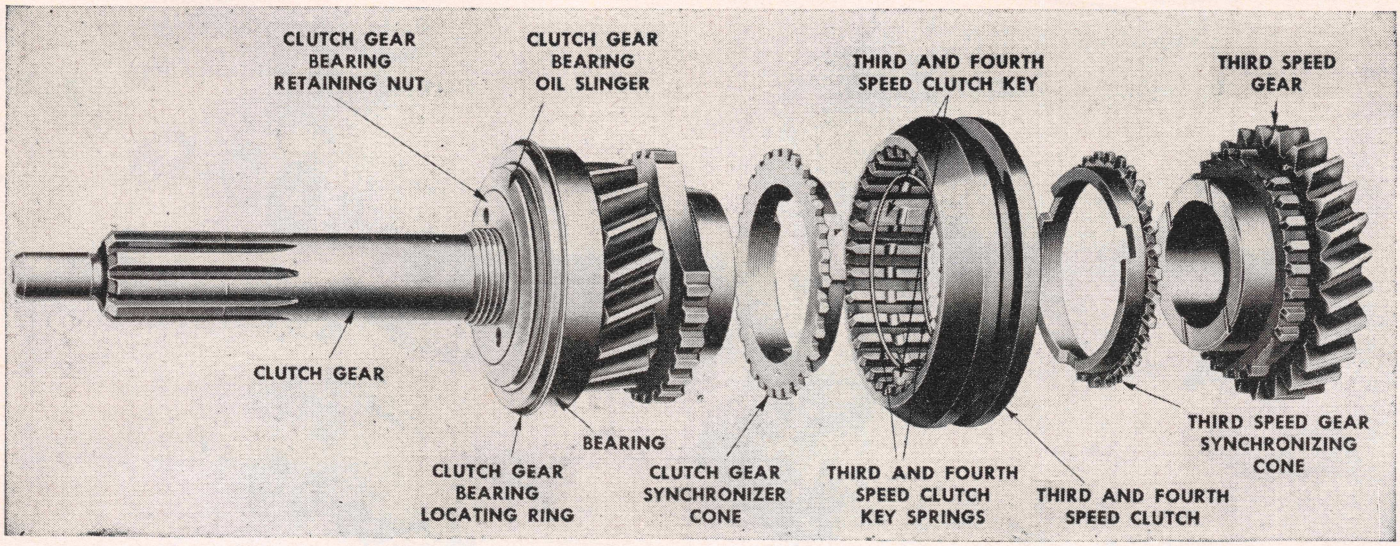

Fig. 3 Detail of 3rd and 4th speed synchronizer. 1952-61 four speed transmission. For 1962-63 a spline lock feature is used for the 3rd and 4th gear clutch assembly

against clutch sleeve. Both springs must be installed in the same relative position to provide even tension on the clutch keys.

9. Support mainshaft assembly in an arbor press. Install clutch hub assembly with taper on clutch sleeve and long shoulder of clutch hub toward pilot on mainshaft. Then press clutch hub onto shaft until it bottoms. Make certain that slots in third speed gear synchronizing cone index with the three clutch keys in the clutch hub.
10. Check third speed gear end play which should be .010″ to .014″.
11. Install clutch hub retainer ring. The retainer ring is a selective lock ring and should be checked carefully for proper thickness at assembly. There are four thickness rings available.

Countershaft Gears, Replace

Should it be necessary to replace any of the countershaft gears, the lock ring on the front end of the shaft should first be removed and then the assembly supported on an arbor press and the shaft pressed out of the train of gears.

When reassembling the new gears to the countershaft, the radius end of the second speed gear faces the first speed gear. The third speed gear is installed next and inasmuch as both sides of this gear are identical it may be installed either way. The reverse speed gear is installed onto the shaft next so that the chamfered end of the teeth face the counter driven gear. Only one spacer is used and that is installed between the reverse gear and counter driven gear. The counter driven gear is installed last.

When pressing the gears on the countershaft, new drive pins should be used and, after all gears are pressed into position, the round pins should be driven $\frac{1}{32}$″ below flush with shoulder on counter driven gear hub. The snap ring on the front end of the countershaft is a selective lock ring and should be checked carefully for proper thickness on assembly.

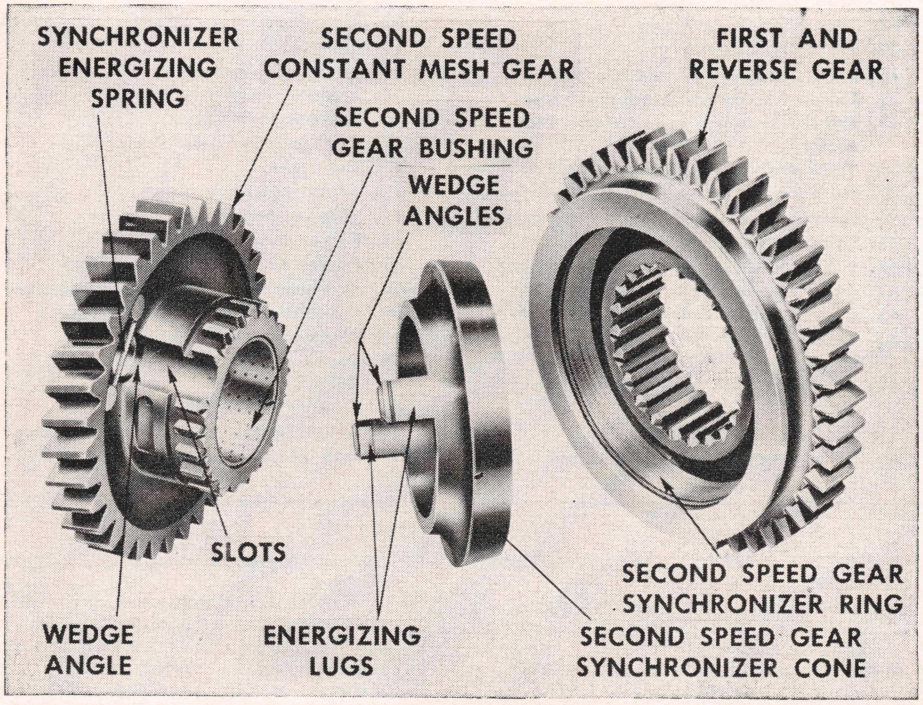

Fig. 4 Detail of 2nd speed synchronizer

Reverse Idler Gear Bushings

If new bushings are required, press them into the gear from each end until flush with ends of gear. It is important that these bushings be staked as they are split bushings and may have a tendency to creep if not properly staked. When installed and properly staked, they must be line-reamed to size.

Transmission, Assemble

1. Install chip collector in bottom of case.
2. Assemble countergear front bearing spacer into case with its open side toward the outside and its edge flush with case.
3. Install countershaft assembly with rear bearing hub extending through rear bearing hole in case.
4. Install oil deflector and rear bearing on countershaft, using bearing retainer to drive bearing onto shaft. Lock bolts by bending tangs on lock plate.
5. Move countershaft forward into position. Rear bearing outer snap ring limits forward movement of countershaft.

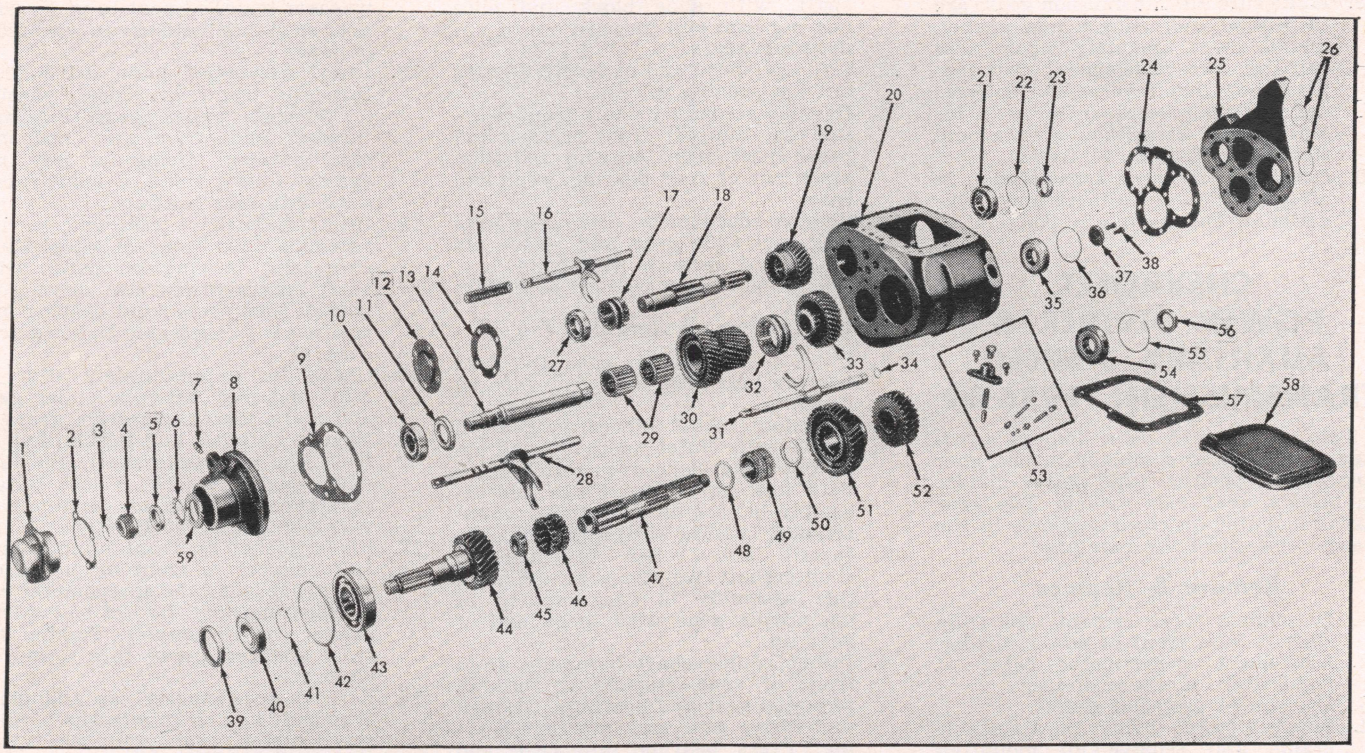

Fig. 5 Power divider and auxiliary transmission for tandem rear axles, 1956-59

1. Speedometer gear cap
2. Gasket
3. Snap ring
4. Speedometer drive gear
5. Lock nut
6. Tanged washer
7. Breather
8. Front adapter
9. Gasket
10. Bearing
11. Thrust washer
12. Bearing cap
13. Countershaft
14. Gasket
15. Spring
16. Declutching shift rod and fork
17. Declutching slide block
18. Secondary shaft
19. Secondary shaft gear
20. Case
21. Bearing
22. Snap ring
23. Spacer
24. Gasket
25. Rear adapter
26. Oil seals
27. Bearing
28. Direct-low shift rod and fork
29. Roller bearings
30. Two-step gear
31. Underdrive shift rod and fork
32. Underdrive slide block
33. Countershaft underdrive gear
34. Snap ring
35. Bearing
36. Snap ring
37. Washer
38. Cap screws
39. Oil seal
40. Bearing
41. Snap ring
42. Snap ring
43. Bearing
44. Main drive gear
45. Pilot bearing
46. Direct-low slide block
47. Main drive shaft
48. Washer
49. Bearing
50. Washer
51. Puller gear
52. Main drive shaft underdrive gear
53. Poppets, plugs and springs
54. Bearing
55. Snap ring
56. Spacer
57. Cover
58. Gasket
59. Oil slinger

6. Place reverse idler gear into position and install shaft from rear to front, being careful to have slot in shaft in a horizontal position.
7. Drive idler shaft in until hole in shaft aligns with lock pin hole in case and install lock pin.
8. Install mainshaft so that rear of shaft protrudes out of rear bearing hole in case.
9. Install mainshaft rear bearing onto shaft.
10. Install mainshaft pilot bearing spacer on mainshaft pilot. Then install clutch gear synchronizer cone to pilot end of mainshaft and move mainshaft forward until clutch sleeve clears third speed gear on countershaft assembly.
11. Index cut-out portion of clutch gear teeth to obtain clearance over countershaft driven gear and install clutch gear assembly into case.
12. Install clutch gear bearing retainer, using new gasket. Apply Permatex or other suitable sealing compound to bearing retainer bolt threads, install bolts and tighten to 15-18 foot pounds.
13. Raise front end of mainshaft and enter pilot into mainshaft pilot rollers in clutch gear.
14. Using suitable pusher tool (J-2667) install mainshaft and bearing into case. Make sure three cut-out sections of fourth speed synchronizer cone align with three clutch keys in clutch assembly.
15. Install rear bearing retainer, using new gasket. Apply Permatex or other suitable sealer to retainer bolt threads and tighten bolts to 20-25 lb. ft. torque.
16. Place reverse shifter lever into position and thread lever bolt with bolt sleeve and flat washer through lever and into case from inside out. Tighten bolt to 25-30 lb. ft. torque. Install shift lever bolt nut and tighten to 60-65 lb. ft. torque. The sleeve is used under the head of the bolt to act as a shoulder for shifter lever to pivot on.
17. Install universal joint flange with speedometer drive gear on mainshaft. Lock transmission in two gears and tighten yoke retaining cap screw to 60-65 lb. ft. torque. Install speedometer driven gear in rear bearing retainer and tighten securely.

18. Make sure all transmission gears are in neutral and, using a new gasket, install cover assembly, being sure shifting yokes slide over their proper gears and that reverse shifter lever engages the reverse shifter head. Install cover attaching screws and tighten to 20-25 lb. ft. torque.
19. Check operation of transmission in all gears to be sure there is no indication of binding in any position.

CHEVROLET POWER DIVIDER & AUXILIARY 3 SPEED TRANSMISSION, 1956-59

This unit, Fig. 5, is a 3-speed auxiliary transmission combined in one gear box with a positive type power divider on tandem rear axle models. The gear box is mounted on cross supports to the frame forward of the rear axle.

Remove & Replace

1. Disconnect three control rods from shift rods at front of power divider.
2. Disconnect speedometer cable at right front of power divider.
3. Disconnect propeller shafts.
4. Support power divider on a suitable cradle and remove all mounting bolts.
5. Move unit to rear and down out of vehicle.
6. Reverse above procedure to install.

Disassemble, Fig. 5

1. Remove top cover.
2. Loosen lock screw in direct-low shift fork so fork will slide along rod.
3. Engage direct-low slide block into clutch teeth of low speed gear and push underdrive shift rod forward to engage underdrive slide block into clutch teeth of two-step gear. This locks gear from turning so U-joint flanges can be removed.
4. After removing U-joint flange, remove mounting clamp from front adapter.
5. Remove rear adapter and gasket.
6. Slip off U-joint flange spacers at rear of shafts.
7. Remove shift rods, forks and poppets. *If interlock balls prevent withdrawal of direct-low shift rod, adjust position of underdrive shift rod slightly to obtain complete release.*
8. Remove speedometer driven gear from cap and remove cap from front adapter.
9. Remove adapter, including front bearing and oil seal from case and off end of main drive gear.
10. Remove snap ring from main drive gear bearing and pull bearing and gear from case.
11. With block of hard wood held against rear of main drive shaft, tap shaft forward out of rear housing. Lift shaft, with slide block and pilot bearing, and pull forward out of underdrive gears.
12. Lift low speed and underdrive gears out top opening in case.
13. Remove secondary shaft front bearing cap. Support front of case and press shaft, front bearing and slide block out of rear bearing, gear and case.
14. Remove speedometer drive gear snap ring and slide gear and sleeve off shaft and remove Woodruff key. Then remove countershaft assembly.

Transmission, Assemble, Fig. 5

1. Place power divider case and rear bearing assembly with rear face on bench.
2. Set countershaft underdrive gear on bench with clutch teeth up and assemble slide block over clutch teeth with fork groove up. Place this assembly in case on top of rear countershaft bearing with slide block up.
3. Install two roller bearings in countershaft two-step gear and place this assembly in case on top of underdrive gear with large end of gear up.
4. Insert countershaft assembly from front of case, passing it through two-step gear and bearings, through underdrive gear and into rear bearing. Press bearing into case and shaft into rear bearing until there is approximately .010″ to .020″ end play between two-step gear and underdrive gear.
5. Turn case with top opening up and check slide block for full engagement with two-step gear and underdrive gear.
6. Install oil slinger against bearing on shaft. Place lockwasher on countershaft with internal tang in groove in shaft, and install nut finger tight against lockwasher.
7. Assemble flat washer on rear of countershaft with two capscrews. Hold shaft from turning with wrench on spanner lock nut and tighten two screws to a torque of 55 lb. ft.
8. Check for approximately .010″ to .020″ end play between two-step gear and underdrive gear.
9. Insert secondary shaft through top opening in case with clutch teeth toward front. Mesh gear with countershaft gear and against rear bearing.
10. Support inner race of rear bearing and install secondary shaft, with declutching slide block and front bearing assembled, through front of case, through gear and into rear bearing. Press assembly into place until shoulder on shaft seats against rear bearing.
11. Place main drive shaft underdrive gear inside and at rear of case with pilot flange toward front (internal splines recessed from edge).
12. Place puller gear with bearing and washers installed next to underdrive gear so clutch teeth are toward front of case.
13. Insert assembled main drive shaft through front of case, passing it through puller gear bearings, through underdrive gear and into rear bearing. Using a soft rod against forward end of shaft, press shaft into rear bearing.
14. Insert main drive gear and bearing assembly into front of case. Make sure pilot bearing on main drive shaft enters freely into drive gear pocket, then press front bearing into position with snap ring tight against case.
15. Check for approximately .010″ to .020″ end play between puller gear and main shaft underdrive gear.
16. Engage clutches and tighten nut on front end of countershaft, and lock with tang on washer. Check torque of screws on rear of countershaft which should be 55 lb. ft.
17. Place gasket on front adapter and bolt adapter to front of power divider case using the speedometer cap for locating only. *Do not bolt speedometer cap to adapter.* Tighten ½″ front adapter screws to a torque of 65 lb. ft.
18. Remove speedometer cap and place Woodruff key on countershaft. Slide speedometer gear and sleeve on countershaft with hub toward case and lock with snap ring.
19. Assemble speedometer cap with gasket in place and install on adapter. Tighten screws to a torque of 35 lb. ft. and install speedometer driven gear fitting.
20. With gasket in place, assemble front bearing cap-to-power divider case with ½″ screws and torque them to 55 lb. ft.
21. Install shift rods, forks, poppets, balls and springs.
22. Slip U-joint spacers on shafts at rear and, with gasket in place, bolt rear adapter to case, tightening screws to 70 lb. ft.
23. Assemble power divider front support bracket to front adapter.
24. Engage direct-low slide block into clutch teeth of low-speed gear and engage underdrive slide block into clutch teeth of two-step gear. This prevents the gears from turning when U-joint flanges are tightened.
25. Install mounting clamp on front adapter.
26. Push or tap three U-joint flanges on splined shafts. Install washers and nuts, tightening them to 280 lb. ft. torque.
27. Set slide blocks in neutral position. Line up lock screw hole in direct-low shift fork with hole in shift rod, install screw and lock with wire.
28. With gasket in place, attach top cover and tighten capscrews to a torque of 30 lb. ft.
29. Install drain plug and, after installing lubricant, install filler plug.

Automatic Transmission Section

For Allison Powermatic and Hydramatic transmissions used on Chevrolet, see the "name" chapters for service procedures

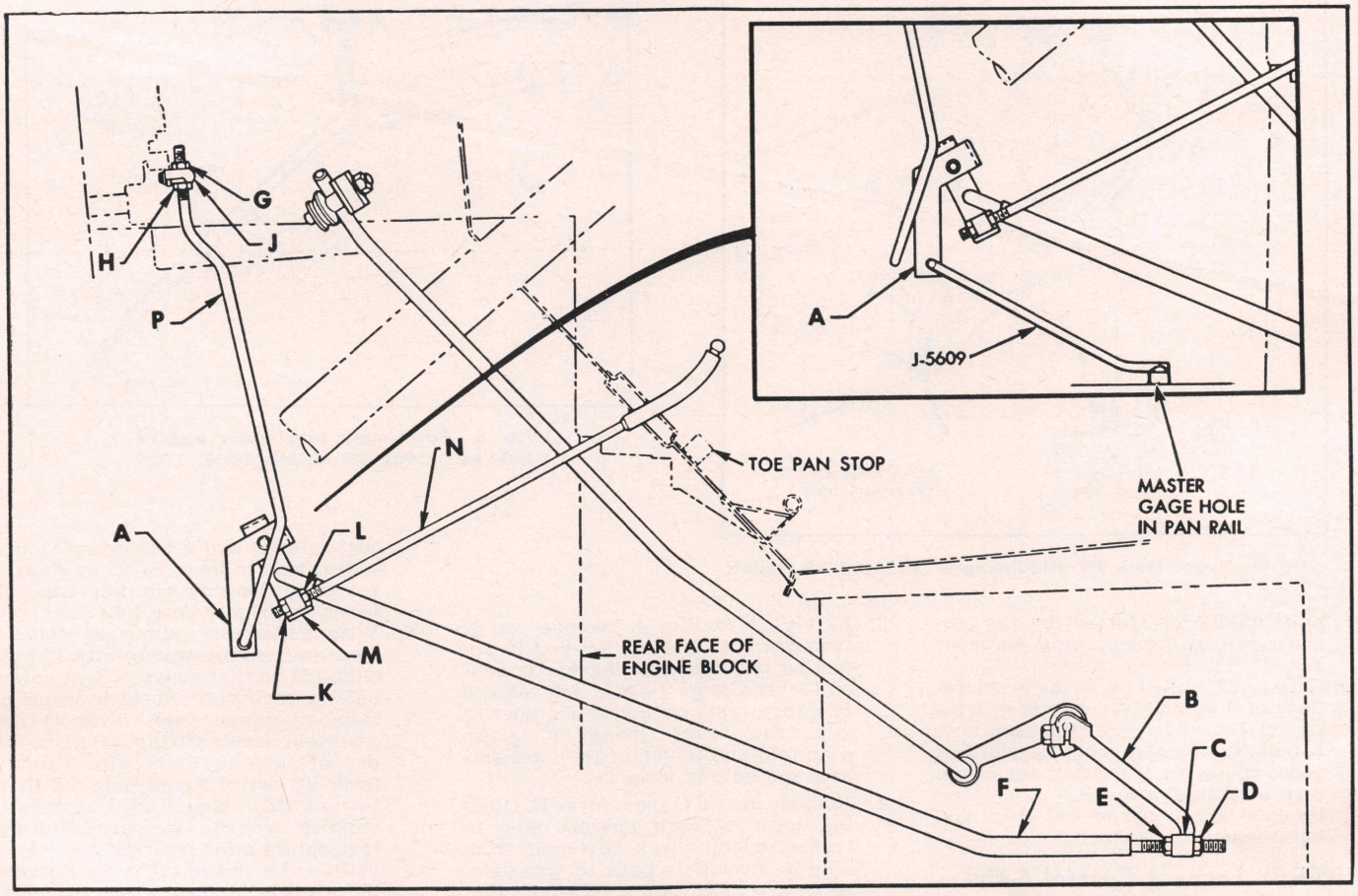

Fig. 1 Hydra-Matic throttle linkage. Conventional 6-cyl. models. 1954-59

HYDRA-MATIC DRIVE

For a detailed service procedure on repairing the Hydra-Matic transmission, see the Hydra-Matic chapter elsewhere in this manual. The following material outlines the procedure for adjusting linkage and removing the transmission from the truck.

THROTTLE LINKAGE, ADJUST

1954-59 Conventional 6-Cyl. Models

1. Adjust engine idle speed to 400-450 rpm.
2. Referring to Fig. 1, remove rod P from lever A and set lever A in adjusting position with Gauge J-5609.
3. Remove swivel C from lever B. Holding lever B back against stop in transmission, check distance between hole in lever B to back of transmission case with Gauge J-2545-C, Fig. 2. Bend lever B if required to allow entry of gauge in hole, using Tool J-5260, Fig. 3.
4. With lever B back against stop, adjust nuts D and E so swivel C just enters hole in lever B.
5. Remove gauge J-5609 and reinstall rod P to lever A.
6. With engine warm and idle adjustment set at 400-450 rpm, adjust nuts G and H so swivel J just enters hole in carburetor throttle lever.
7. Shorten rod F by loosening nut E two turns, then tighten nut D.
8. Remove swivel J from hole in carburetor lever and pull rod P upward

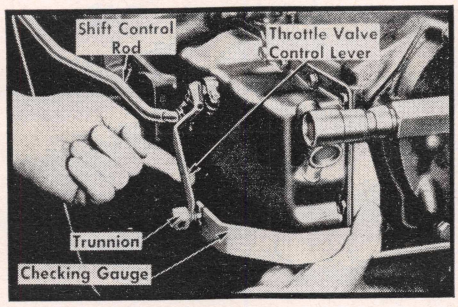

Fig. 2 Checking throttle lever position

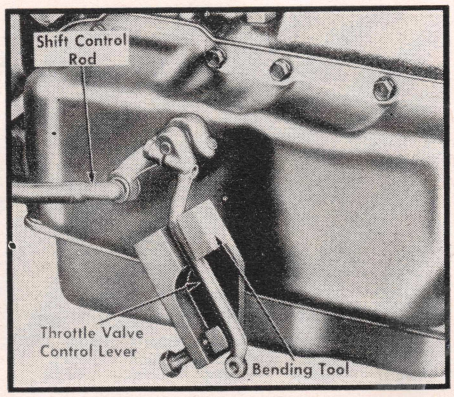

Fig. 3 Use of tool for bending throttle lever

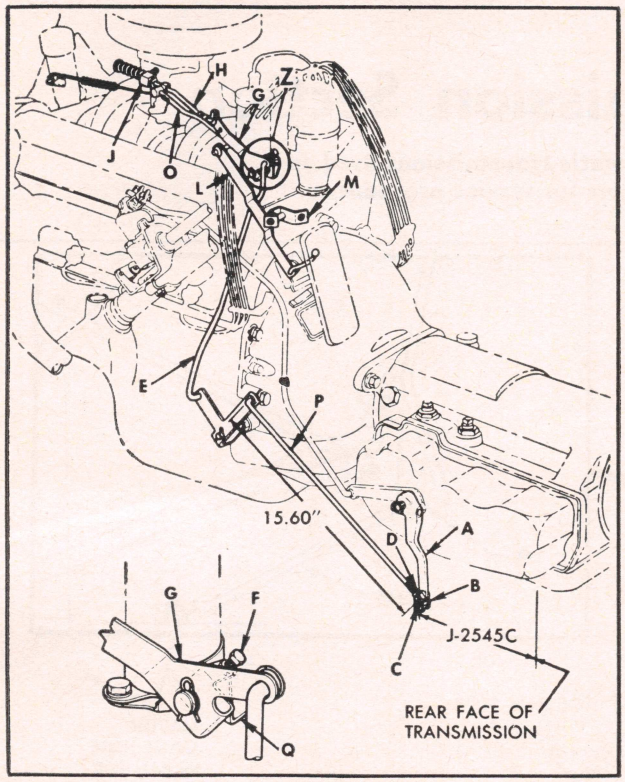

Fig. 5 Hydra-Matic throttle linkage. 1955-59 V8 models

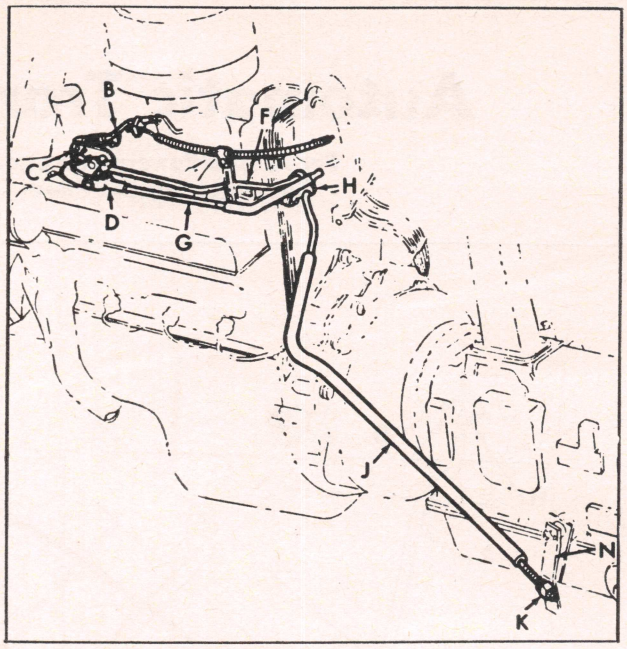

Fig. 6 Powermatic accelerator and TV linkage. 1956-59 Models 5000, 7000

until linkage is stopped by the forward stop in transmission for lever B.

9. With rod P pulled up, bring accelerator pedal against toe pan stop with swivel M in place by adjusting nuts L and K. Then shorten accelerator pedal rod N by loosening nut L one turn and tighten nut K.
10. Replace upper end of rod P in carburetor lever at swivel J.

1954-59 Forward Control 6-Cyl. Models

1. Unfasten and remove engine cover.
2. Adjust engine idle speed to 400-450 rpm.
3. Referring to Fig. 4, remove rod N from lever O and set lever O in adjusting position with carburetor control lever Gauge J-5629. Slotted end of gauge rests on inside shoulder of hex head brass fitting on intake manifold and pin end fits in accelerator rod hole in lever O.
4. Remove swivel C from lever B. Holding lever B back against stop in transmission, check distance from hole in lever B to back of transmission case with Gauge J-2545-C, Fig. 2. Bend lever B if required to allow entry of gauge in hole, using Tool J-5260, Fig. 3.
5. With lever B back against stop, adjust nuts D and E so swivel C just enters hole in lever B. Then shorten rod F by loosening nut E two full turns and tighten nut D.
6. With carburetor idling at 400-450 rpm and engine warm, adjust nuts G and H so that swivel J just enters hole in carburetor throttle lever.
7. Remove gauge from lever O and manifold brass fitting. Pull rod P out of hole in carburetor throttle lever at swivel J and pull rod F up toward floor board until linkage is stopped by the forward stop on transmission for lever B.
8. With rod F pulled up, replace swivel M in lever O. Then adjust accelerator pedal against toe pan stop with swivel M in place by adjusting nuts L and K.
9. Replace rod P to carburetor at swivel J.
10. Shorten rod N by loosening nut L one full turn and tightening nut K.

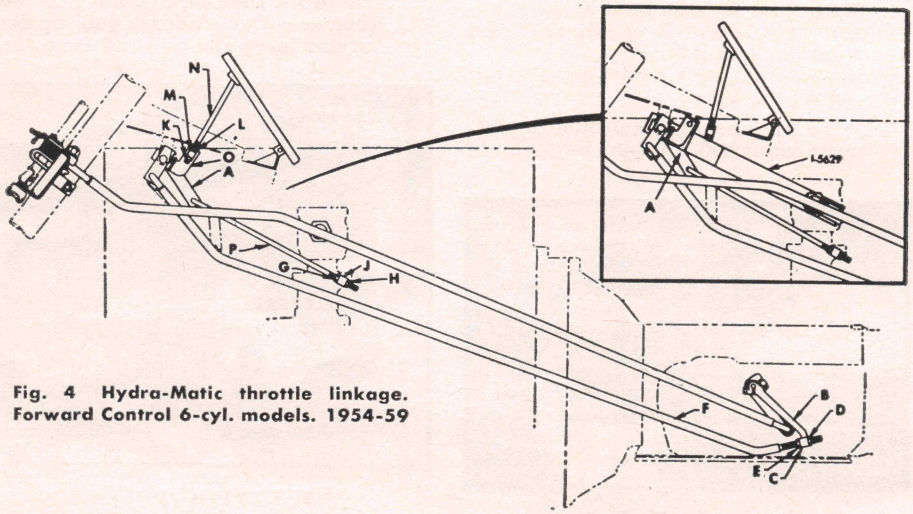

Fig. 4 Hydra-Matic throttle linkage. Forward Control 6-cyl. models. 1954-59

1955-59 V8 Models

1. With carburetor at hot idle, and rod P removed from lever A, hold lever A back against transmission stop. Check distance from hole in lever A to back of transmission case with gauge shown in Fig. 2. Bend lever A if required to allow entry of gauge in hole, Fig. 3.
2. Adjust length of rod P to 15.60" and install in lever A, Fig 5.
3. Install rods E and H.
4. Loosen nut D 3½ turns and tighten nut B.
5. With stop screw F backed off, rotate lever G until linkage is stopped by full detent stop in transmission. Adjust screw F until it contacts bracket Q. Release lever G and advance screw F ½ to 1 full turn and lock.

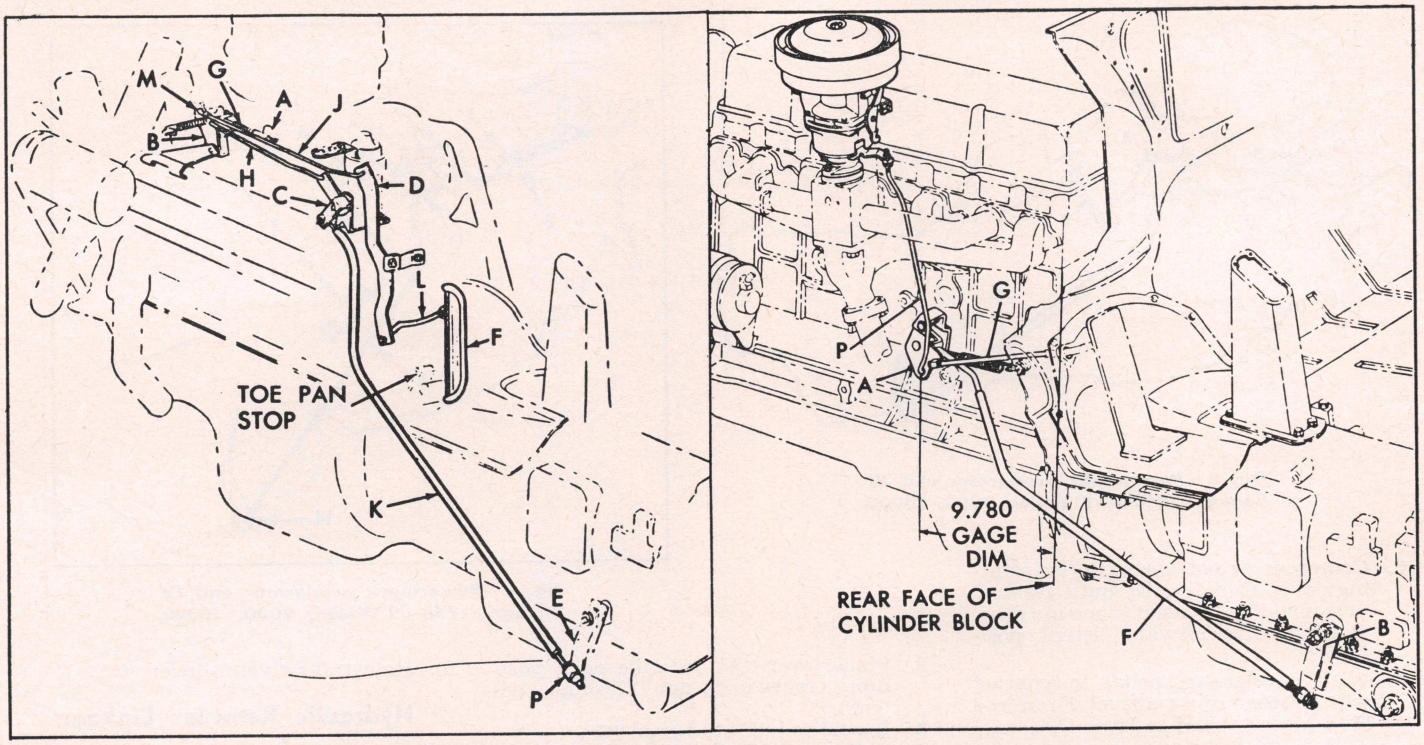

Fig. 7 Powermatic accelerator and TV linkage. 1956-59 Models 6000, 8000

6. On 3100, 3200 and 3600 series only, install ⅛″ gauge pin through hole in lever L and bracket M. Install rod O to lever L and rotate lever L until stop screw F contacts bracket Q. Adjust length of rod O so swivel just enters lug on rod H.

Manual Control Linkage, Adjust 1954-59

Move shift control lever from N position to first detent you feel. In this position indicator should line up approximately with symbol 1-4. Check control lever in each of the other positions for indicator alignment. If alignment is not satisfactory, proceed as follows:

1. If gear shift control shaft upper support bracket is loose, tighten the clamp screw while holding the control lever firmly against the stop between 1-3 and 1-2 positions.
2. While holding control lever in 1-3 against the stop which prevents accidental shift into 1-2, loosen gear shift control rod swivel.
3. Make sure transmission outer shift lever is in three-speed drive position 1-3. Then tighten gear shift control rod swivel.

Neutral Safety Switch, Adjust

All trucks equipped with Hydra-Matic transmission are provided with a neutral safety switch which prevents operation of the starting motor except when the transmission is in Neutral position.

Place control lever in 1-4 position. With ignition off, operate starter control. If the starter operates, adjust as follows:

1. Loosen two switch mounting screws.
2. Place selector lever in Neutral and with clip over flats on end of shifter shaft, insert pin into switch mounting bracket and locating plate, Fig. 5.
3. Tighten screws to secure switch in this position and remove locating pin.

POWERMATIC ADJUSTMENTS, 1956-59

Accelerator & TV Linkage 5000 & 7000 Models

1. Referring to Fig. 6, install levers C and H and rods B and F (swivel on rod B should be installed in second hole from front of lever C).
2. Pull carburetor lever to wide open throttle position.
3. With rod J installed in lever H pull lever N forward to internal stop (full forward stop position).
4. Position swivel K on rod J so that it just enters upper hole in lever N. Tighten nuts against swivel K then back rear nut off 4½ full turns. Tighten swivel K against rear nut by tightening front nut. Install swivel K to lever N with clip.
5. Rotate lever C rearward through detent on rod B compressing spring on rod B until stopped by internal stop in transmission at lever N.
6. Position accelerator pedal down against toe pan stop and position clevis D on rod G so that it aligns with hole in lever C with lever on carburetor in wide open throttle position.
7. Holding pedal against stop, move clevis D forward (lengthening rod) on rod G 5 full turns. Tighten clevis D with lock nut.

6000 & 8000 Models

1. Referring to Fig. 7, place carburetor lever A in wide open position (rearward).
2. Install rod K to lever C.
3. Pull lever E forward tight against internal stop.
4. Position swivel P on rod K so it enters upper hole in lever E and tighten nuts against swivel.
5. Back off rear nut 3½ turns and tighten forward nut against swivel P.
6. Rotate lever B rearward through detent, compressing spring G until stopped by transmission internal stop at lever E.
7. Install rod J to lever D and adjust swivel M on rod J to enter hole in lever B with pedal F tight against toe pan stop.
8. Remove swivel M from lever B and turn swivel M clockwise 2 complete turns to shorten distance between ends.
9. Reinstall swivel M to top hole in lever B.

1956-57 9000 & 10000

1. Referring to Fig. 8, with carburetor in wide open position and transmission lever L forward against full detent stop, adjust swivel N on rod K to enter lower hole in lever L.
2. Back off rear 3½ turns and tighten forward nut against swivel N.

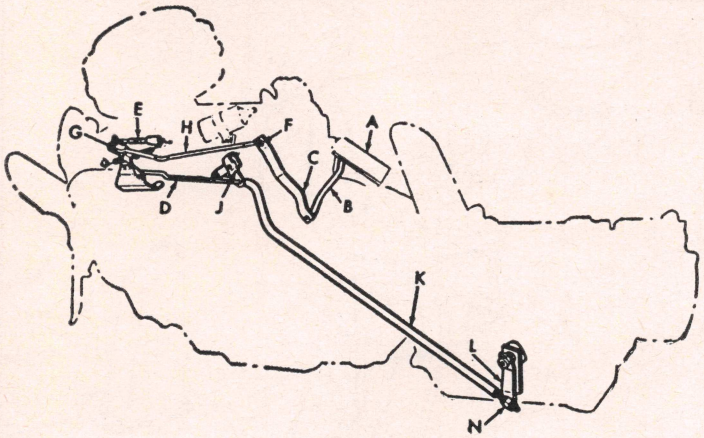

Fig. 8 Powermatic accelerator and TV linkage. 1956-57 Models 9000, 10000

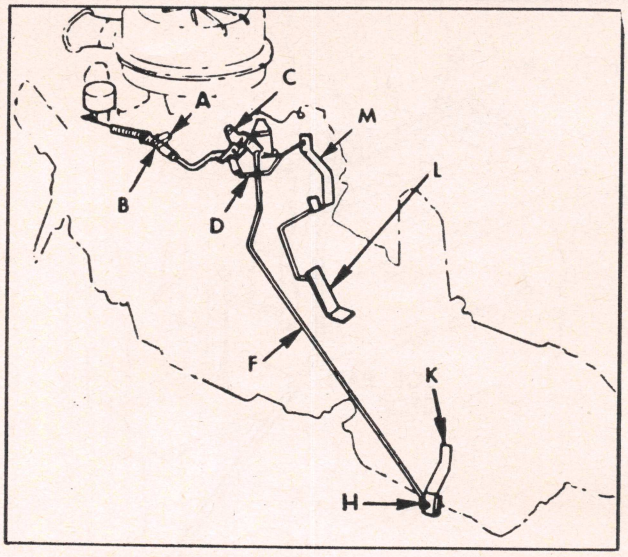

Fig. 9 Powermatic accelerator and TV linkage. 1958-59 Models 9000, 10000

3. Compress detent spring E by rotating lever G rearward until lever L is stopped by internal stops in transmission (full forward detent position).
4. With accelerator pedal in contact with floor, adjust swivel F on rod H to attach rod H to lever C.
5. Turn swivel F approximately 6 turns clockwise to raise accelerator pedal free of floor. *On 9000 models, accelerator control rod has clevis at lever G. With pedal against stop and throttle lever through detent as in Step 3, adjust clevis to attach accelerator rod to lever G and tighten lock nut.*

1958-59 9000 & 10000

1. Referring to Fig. 9, with carburetor lever "A", rod "B", lever "C", lever "M", pedal "L" and lever "K" in place, proceed as follows:
2. Place lever "A" in wide open position (rearward—not through detent).
3. Install rod "F" to Lever "C".
4. Pull lever "K" forward tight against internal stop.
5. Position swivel "H" on rod "F", so it enters lower hole in lever "K".
6. In this position, back off rear nut at swivel "H" (3½ turns) and tighten front nut against swivel "H".
7. Again pull lever "K" forward tight against internal stop.
8. Install rod "D" to lever "M" and adjust swivel on rod "D" so pedal "L" is tight against floor mat.
9. Remove swivel from lever "C" and turn swivel clockwise 10 complete revolutions to shorten distance between ends.
10. Reinstall swivel to lever "C".

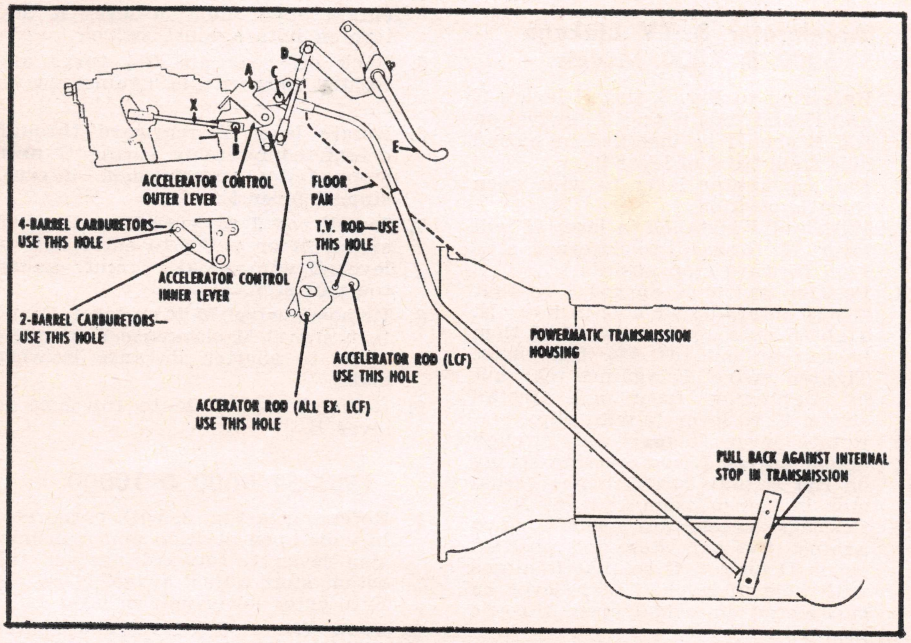

Fig. 10 Linkage adjustment. 1960-62 Powermatic

Hydraulic Retarder Linkage

The adjustment of the hydraulic retarder linkage requires that two conditions be met: *full apply* and *full release*. The only adjustment is located at the swivel clamp in the lower arm of the pedal bell crank under the toe board.

Before starting adjustment of the linkage, disconnect pedal rod from retarder cross shaft lever at lower front side of transmission and move shaft lever by hand to see if cross shaft is free and if retarder valve is hitting internal stops at both ends of its travel. The retarder valve moves ½" total travel and stops are sharp and positive. If cross shaft does not move freely, check for binding of shaft and be sure cross shaft support has spacers under each of three retaining bolts to transmission case. If cross shaft is very sloppy or loose, examine trunnions to see if nylon bushings are missing or broken.

To adjust retarder linkage, force retarder valve in to full travel against internal stop. Place $\frac{1}{16}$" to ⅛" thick shim between retarder pedal and its toe pan stop and hold pedal tightly against it Tighten clamp bolt on pedal apply rod. The shims under the pedal are used so that after adjustment the linkage lash will be compensated for by additional pedal travel.

Range Selector Linkage

The shift control linkage has only one adjustment. The geometry of the linkage is designed so that the only adjustment is on the swivel clamp at the bell crank lower arm. Place the shift tower shifter lever on the transmission full forward. Tighten clamp bolt. Shift slowly a few times to insure that the shift lever is not at the end of its travel at either end of the slot before the detent acts.

Neutral Safety Switch

To adjust the neutral safety switch, place shifter lever in Neutral, being

sure "V" formed by the two arms of the switch lever is pointed upward. Loosen front screw of two screws attaching switch bracket to tower support. Install 3/32" drill through hole in lower switch arm and bracket. Tighten bracket attaching screws securely. Remove drill from lever and bracket.

POWERMATIC LINKAGE, 1960-63

Control Linkage (Except Tilt Cab)

1. Insert a ¼" steel pin approximately 3" long through point "A", Fig. 10. This pin must pass through bosses on both sides of lever and a boss on the support bracket.
2. Place carburetor on hot idle stop and position TV rod full rearward against internal stop in transmission. To hold this rod in position a retaining wire must be inserted through the TV lever on the transmission and into a small hole on the transmission pan.
3. Insert swivel "B" on rod "X" into the accelerator control outer lever, then tighten compression nut. *Use the upper hole in the control lever for four barrel carburetor and the lower hole for the two barrel carburetor.*
4. Insert swivel "C" on the TV rod into the accelerator inner lever, then tighten compression nut.
5. If installed, remove the retaining wire from TV lever on transmission. Rotate accelerator control levers through detent. Adjust accelerator pedal rod at "D" so that surface "E" comes in full contact with floor mat. The L.C.F. accelerator rod attaches at rearmost hole on the inboard arm of the inner lever. All others attach to the lower hole of the outboard arm of the inner control lever. *If engine idles too fast after adjusting, recheck linkage adjustment. Be sure carburetor idle speed screw is fully off the fast idle cam throughout adjustment.*

Hydraulic Retarder Linkage

The adjustment of the hydraulic retarder linkage is fundamentally the same as hydraulic clutch pedal adjustment described in the Clutch Section. However, the hydraulic retarder pedal is adjusted to give ⅛" free pedal travel.

Once the pedal is adjusted, final adjustment of the hydraulic retarder control linkage is completed at the slave cylinder which actuates the hydraulic retarder valve at the Powermatic.

To adjust the slave cylinder, fully depress the slave cylinder push rod into the cylinder, then adjust the clevis on the push rod for free entry to the hydraulic retarder valve lever on the transmission.

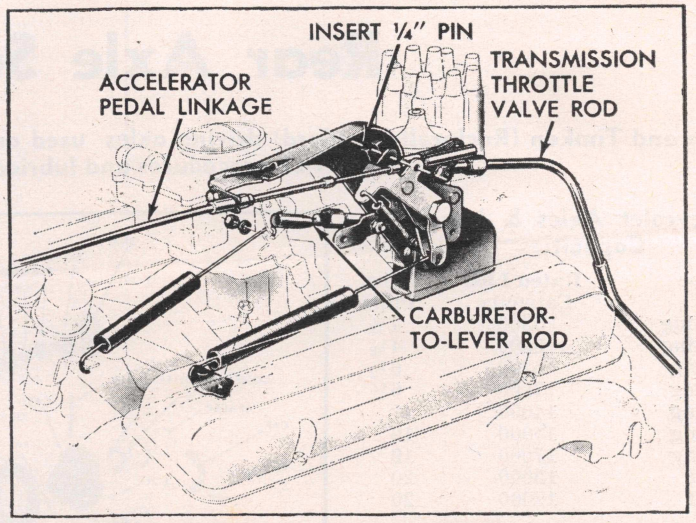

Fig. 11 Powermatic linkage adjustment. 1961-63 Tilt Cab models

Tilt Cab Models

1. Insert a 3" long pin of ¼" diameter through two holes and notch, Fig. 11, to retain linkage in proper position.
2. With carburetor-to-lever rod clamp nut loose, place carburetor on normal idle stop and tighten clamp nut.
3. With clamp nut loose on transmission throttle valve rod and the TV lever on transmission held fully to the rear, tighten TV rod clamp nut.

Range Selector Linkage

The shift control cable is designed so the only adjustment is on the lower clevis at the transmission shift lever. Place the shift tower shifter lever in full "Lo" position, and the shift on the transmission full rearward. Adjust clevis on cable to insert clevis pin freely in hole in transmission shift lever and secure with cotter pin. Shift slowly a few times to insure that the shift lever is not at the end of its travel at either end of the slot before the detent acts.

Neutral Safety Switch

This adjustment is obtained in the same manner described for previous models.

POWERMATIC, REPLACE

1. Remove spark plug and disconnect battery ground strap.
2. Remove filter cartridge from transmission oil pan.
3. Remove control tower.
4. Disconnect throttle valve control rod from lever.
5. Disconnect retarder pedal rod from lever at transmission and unhook return spring from shaft at right side of transmission.
6. Remove oil filler tube and hose.
7. Disconnect oil cooler lines at brake valve body and warning signal wire from sender at top of oil line tee.
8. Disconnect speedometer driven shaft fitting from adapter.
9. Remove propeller shaft and bearing support, and hand brake assembly.
10. Remove flywheel underpan and, turning flywheel as necessary, remove flywheel-to-converter pump cover nuts.
11. Support rear of engine and remove converter housing-to-flywheel housing bolts.
12. Support transmission in suitable cradle and remove transmission mounting bolts.
13. Remove transmission rear support from frame, move transmission to rear slightly and lower from under vehicle.
14. Reverse the foregoing procedure to install the transmission.

Rear Axle Section

For Eaton and Timken (Rockwell-Standard) driving axles used on Chevrolet trucks, see the "name" chapters for service procedures and lubricant capacities

Chevrolet Axles & Lube Capacities

Axle Type	Rated Lbs. Capacity	Lube. Pints
Semi-floating	3300	4½
Semi-floating	3500	4½
Full-floating	5200	6½
Full-floating	7200	6½
Full-floating	11000	18
Full-floating	15000	19
Full-floating	17000	19
Two-Speed	15000	20
Two-Speed	17000	20

CHEVROLET SEMI-FLOATING AXLE, 1963

In these rear axles, Fig. 1, the rear axle housing and differential carrier are cast into an integral assembly. The drive pinion assembly is mounted in two opposed tapered roller bearings. The pinion bearings are preloaded by a spacer behind the front bearing. The pinion is positioned by a washer between the head of the pinion and the rear bearing.

The differential is supported in the carrier by two tapered roller side bearings. These bearings are preloaded by spacers located between the bearings and carrier housing. The differential assembly is positioned for proper ring gear and pinion backlash by varying these spacers. The differential case houses two side gears in mesh with two pinions mounted on a pinion shaft which is held in place by a lock pin. The side gears and pinions are backed by thrust washers.

Diff. Carrier Assy

Any major repairs on the differential carrier assembly, such as replacing the ring gear and pinion, calls for most accurate and precise adjustments of the assembly. Therefore, if the necessary tools and equipment are not available to do a first rate job, the carrier assembly should be exchanged for a new one, or the work should be farmed out to the truck dealer or to an auto parts jobber who has the facilities to do the work properly. For the guidance of those who are equipped to do this type of work, refer to Fig. 1.

Remove & Replace

Construction of the axle assembly is such that service operations may be performed with the housing installed in the vehicle or with the housing removed and installed in a holding fixture. The following procedure is necessary only when the housing requires replacement.

1. Raise vehicle and place stand jacks under frame side rails.
2. Remove rear wheels.
3. Support rear axle assembly with a suitable jack so that tension is relieved in springs and tie rod.
4. Disconnect tie rod at axle housing bracket.
5. Remove trunnion bearing "U" bolts from rear yoke, split universal joint, position propeller shaft to one side and tie it to frame side rail.
6. Remove axle "U" bolt nuts and allow control arm and shock absorbers to hang freely so that they do not interfere with axle. *On K Series trucks, remove spacer from axle housing.*
7. Disconnect hydraulic brake hose at connector on axle housing.
8. Remove brake drum and disconnect parking brake cable at lever and at flange plate.
9. Lower axle and remove from vehicle.
10. Reverse foregoing procedure to install axle assembly.

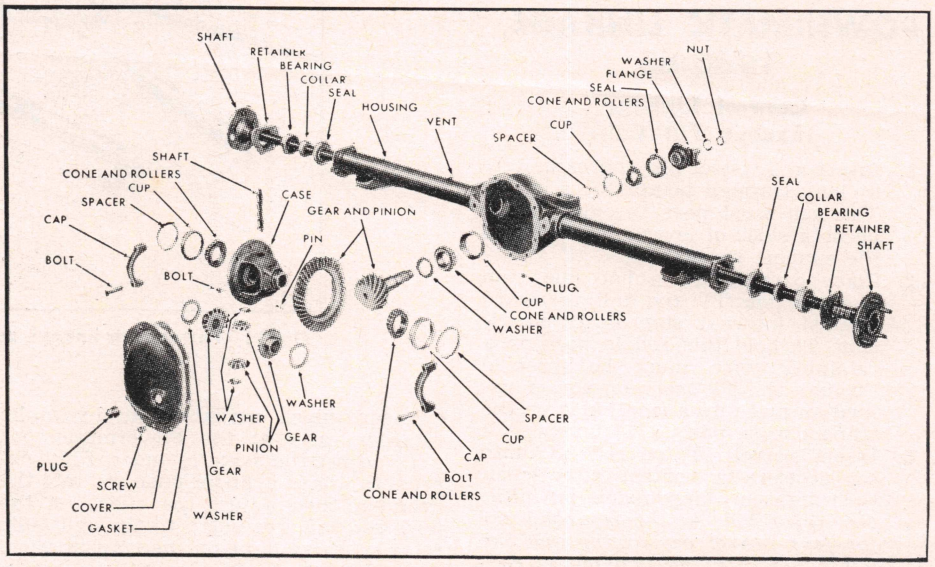

Fig. 1 Semi-floating rear axle of 3300 and 3500 lbs. rated capacity used on 1963 ½ ton trucks

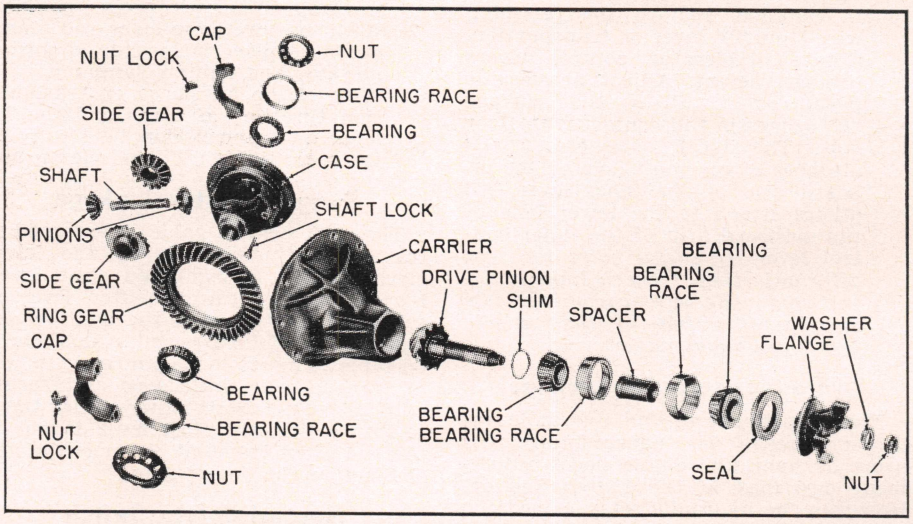

Fig. 2 Semi-floating rear axle of 3300 and 3500 lbs. rated capacity used on ½ ton models prior to 1963

Axle Shaft, Replace

1. Raise vehicle and remove wheel and brake drum.
2. Drain lube from carrier and remove cover.

3. Remove differential pinion shaft lock screw and remove differential pinion shaft.
4. Pull flanged end of axle shaft toward center of vehicle and remove "C" lock from button end of shaft.
5. Remove axle shaft from housing, being careful not to damage seal.
6. Reverse foregoing procedure to install the axle shaft.

CHEVROLET SEMI-FLOATING AXLE, 1955-62

In these axles, Figs. 2 and 3, the drive pinion is mounted in two tapered roller bearings that are preloaded by a spacer. The pinion is positioned by a shim located between the head of the drive pinion and the rear pinion bearing. The front bearing is held in place by a large washer and a locking pinion nut.

The differential is supported in the carrier by two tapered roller side bearings. These bearings are preloaded by two threaded adjusting sleeves or ring nuts between the bearings and the pedestals. The differential assembly is positioned for proper ring gear and pinion backlash by varying the adjustment of these ring nuts. The ring gear is bolted to the case. The case houses two side gears in mesh with two pinions mounted on a pinion shaft which is held in place by a lock screw. The side gears are backed by thrust washers.

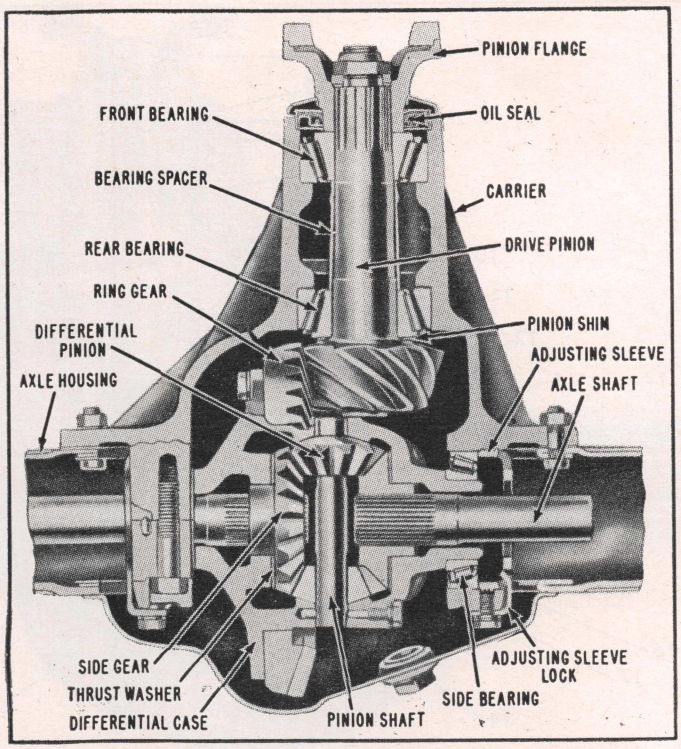

Fig. 3 Semi-floating rear axle of 3300 and 3500 lbs. rated capacity used on ½ ton models prior to 1963

Diff. Carrier Repairs

Any major repairs on the differential carrier assembly, such as replacing the ring gear and pinion calls for most accurate and precise adjustments of the assembly. Therefore, if the necessary tools and equipment are not available to do a first rate job, the carrier assembly should be exchanged for a new one, or the work should be farmed out to the car dealer or an auto parts jobber who has the facilities to do the work properly. For the guidance of those who are equipped to do this type of work, refer to Figs. 2 and 3.

Remove & Replace

It is not necessary to remove the rear axle assembly for any normal repairs. The axle shafts and carrier assembly can easily be removed from the vehicle, leaving the rear axle housing in place.

1. Remove axle shafts as explained further on.
2. Remove two trunnion bearing "U" bolts from rear universal joint and split joint. Lower propeller shaft to floor. Tape bearings to trunnion.
3. Drain lubricant after removing drain plug.
4. Remove sealing lock nuts that attach carrier to housing and remove carrier assembly.
5. Reverse foregoing procedure to install the differential carrier assembly and fill with lubricant to the filler plug hole.

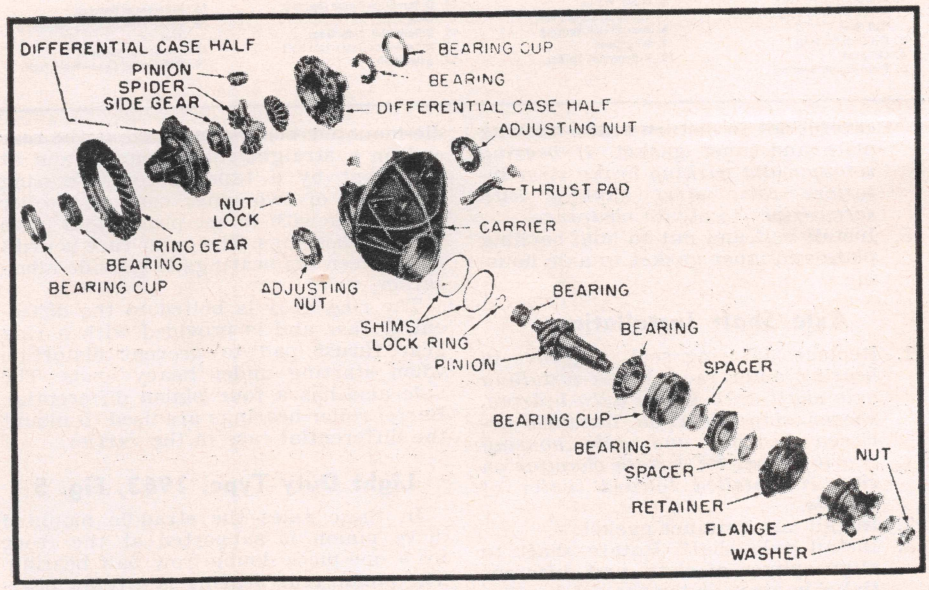

Fig. 4 Full-floating rear axle of 5200 and 7200 lbs. rated capacity used on ¾ and 1 ton trucks prior to 1963

Axle Shaft, Replace

Several types of axle shaft bearings have been used. Some bearings have the seal mounted outboard while others have the seal mounted inboard. These various installations cannot accurately be applied to specific models. Therefore, when necessary to replace a bearing, examine the installation carefully and, if the new bearing is identical with the old, install it in the same way. However, should a roller bearing be installed where the original bearing was a ball type (or vice versa) follow the installation instructions contained in the bearing package.

Axle Shaft Removal

1. Raise car and place jack stands under rear axle housing.
2. Remove wheels and brake drums.
3. Remove four nuts and lockwashers from bearing retainer bolts (on inside of axle flange).
4. If bearing is a tight fit in axle housing, attach a slide hammer type axle shaft puller to hub bolts and remove axle shaft and bearing, Fig. 5. Be

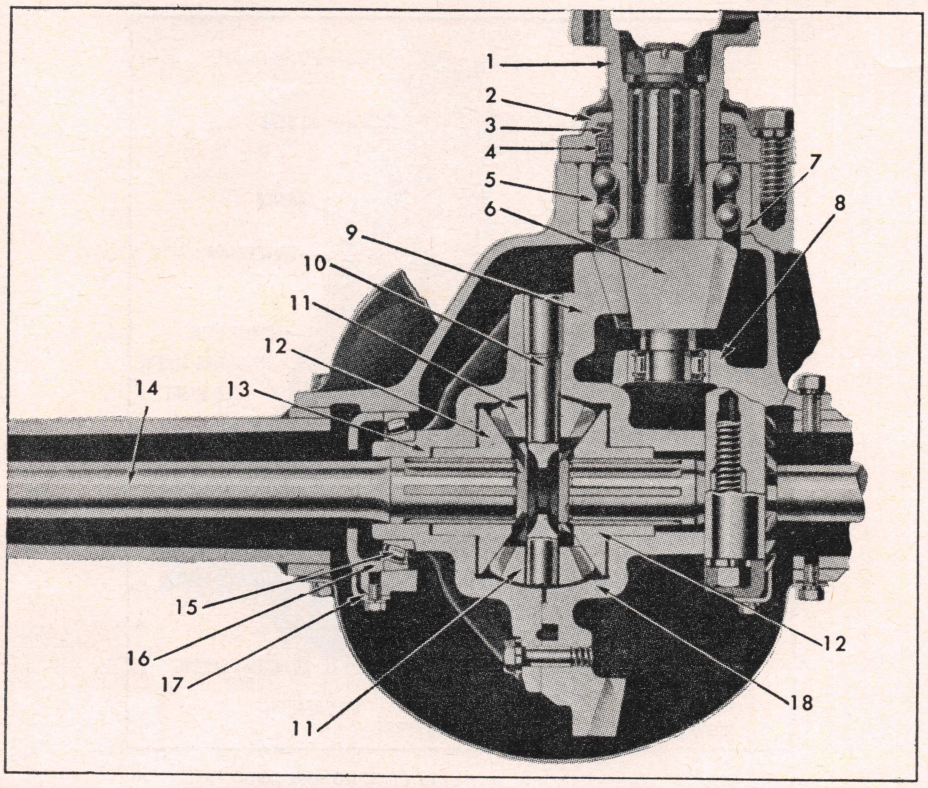

Fig. 5 Full-floating rear axle of 5200 and 7200 lbs. rated capacity used on 1963 ¾ and 1 ton trucks

1. Universal Joint Yoke
2. Pinion Bearing Retainer and Oil Seal
3. Oil Seal Packing
4. Oil Seal
5. Front Pinion Bearing
6. Drive Pinion
7. Pinion Bearing Shim
8. Rear Pinion Bearing
9. Ring Gear
10. Differential Spider
11. Differential Pinion (Spider) Gear
12. Differential Side Gear
13. Differential Case—Left Half
14. Axle Shaft
15. Differential Bearing
16. Differential Bearing Adjusting Nut
17. Adjusting Nut Lock
18. Differential Case—Right Half

careful not to disturb brake backing plate and inner gasket. *If bearing retainer and parking brake strut interfere raise strut slightly with screwdriver to obtain clearance.*

5. Install bolt and nut to hold backing plate and inner gasket to axle housing.

Axle Shaft Installation

1. Replace "O" ring seal in groove in bearing outer race. *When installing axle shaft with heavy duty bearing, spacer ring must be installed between bearing and axle housing bearing bore. Be certain chamfer on ring is installed toward center of vehicle.*
2. Install new retainer gasket.
3. Install axle shaft. Rotate shaft to align splines of shaft and differential side gear. Outer race of bearing must seat against shoulder in axle housing.
4. Secure bearing retainer with nuts and lockwashers, install brake drum gasket, drum, wheel and hub.
5. Lower vehicle to floor and road test for leaks and noise.

CHEVROLET FULL FLOATING AXLES

Light Duty Type, 1955-62, Fig. 4

In these axles the drive pinion is straddle-mounted, being supported at the rear end on a straight roller bearing and at the front by a tapered roller bearing composed of two inner cone and roller assemblies with a one-piece outer race for both bearings. The outer race is drilled between the bearings to provide lubrication.

The ring gear is bolted to the differential case and is provided with a ring gear thrust pad to prevent distortion when starting under heavy loads. The axle also has a four pinion differential. Barrel roller bearings are used to mount the differential case in the carrier.

Light Duty Type, 1963, Fig. 5

In these axles the straddle mounted drive pinion is supported at the front by a one-piece double row ball bearing. The pinion rear bearing is a roller bearing assembly with a precision ground diameter on the pinion pilot which functions as an inner race. Some models utilize a two pinion differential while others have a four pinion differential.

Medium and Heavy Duty Types, Figs. 6, 7

These axles have a straddle-mounted drive pinion which is supported at the rear by a straight roller bearing. The pinion front bearing consists of a double row ball on the medium duty axles and two opposed tapered roller bearings on the heavy duty models. Selective shims placed between front bearing and its seat in the carrier housing provide a means of adjusting pinion depth to attain correct ring gear and pinion tooth contacts.

The differential is a four pinion type. Thrust washers are used between the side gears and case and also between differential pinions and case.

A thrust pad mounted on the end of an adjusting screw threaded into the carrier housing limits deflection of the ring gear under high torque conditions.

AXLE SHAFT, REPLACE

5200 & 7200 Lb Axles

1. Remove bolts that attach axle shaft flange to wheel hub.
2. Install two ½-13 bolts in the threaded holes provided in the axle shaft flange. By turning these bolts alternately the axle shaft may easily be started and then removed from housing, Fig. 8.
3. Thoroughly clean both axle shaft flange and end of wheel hub. *Any lubricant on these surfaces tends to loosen axle shaft flange bolts.*
4. Place a new gasket over axle shaft and position axle shaft in housing so that shaft splines enter differential side gear. Position gasket so that holes are in alignment and install flange-to-hub attaching bolts. Torque bolts to 85-95 ft-lbs. *Note: To prevent lubricant from leaking through flange holes apply Permatex to bolt threads. Use care in the amount of sealer applied. If the application is too heavy, the sealer may be forced out as the bolt is installed and may destroy the sealing effect of the flange-to-hub gasket.*

11,000 & 15,000 Lb. Axles

1. Remove hub cap and install the tool shown in Fig. 9 in tapped hole in shaft flange.
2. Install slide hammer and remove axle shaft.
3. Remove all old gasket material from hub and hub cap. Clean shaft flange and mating surfaces in wheel hub.
4. Install axle shaft so that flange splines index into hub splines. Tap shaft into position.
5. Install new hub cap-to-hub gasket, position cap to hub and install attaching bolts. Torque bolts to 11-18 ft-lbs.

17,000 Lb. Axles

1. Remove axle shaft flange-to-hub retaining nuts.
2. Strike center of shaft flange with a lead hammer to loosen flange and dowels.
3. Remove tapered dowels from studs and pull axle shaft from housing. It may be necessary to spread dowels to permit removal.
4. Clean old gasket material from wheel hub and axle shaft flange and install a new gasket over hub studs and against hub.
5. Install axle shaft so that splines are aligned with differential side gear and flange holes index over hub studs.

6. Install tapered dowel over each hub stud. Install and tighten stud nuts to a torque of 80-100 ft-lbs.
7. See that clearance exists between face of stud nuts and axle shaft flange. If no clearance exists, it indicates excessive wear at studs, tapered dowels or flange holes. Replace worn part if necessary.

WHEEL BEARINGS, REPLACE

Hub & Drum, Remove

1. Remove wheel and axle shaft.
2. Disengage tang of nut lock from slot or flat of lock nut, then remove lock nut from housing tube, using appropriate tool, Fig. 10.
3. Disengage tang of nut lock from slot or flat of adjusting nut and remove nut lock from housing tube.
4. Use appropriate tool, Fig. 10, to remove adjusting nut from housing tube. *On 5200 and 7200 axles, remove thrust washer from housing tube.*
5. Pull hub and drum straight off axle housing, using care on 11,000, 15,000 and 17,000 lb. axles to avoid dropping outer bearing inner race and roller assembly. *Note: on 15,000 lb. axle, remove inner bearing race and inner bearing oil seal from axle housing and discard seal.*

Bearing Cup, Replace

Replace inner cup (all axles) and outer bearing cup for 17,000 lb. axles as follows:

1. Cut a suitable length of ½" steel bar stock for press-out tool as shown in Fig. 11.
2. Place appropriate press-out tool behind bearing cup, index tool in notches provided, and press out cup with an arbor press.
3. Position bearing cup in hub with thick edge of cup toward shoulder in hub. Then, using applicable cup installer, press cup into hub until it seats on hub shoulder. Make certain cup is not cocked and that it is fully seated against shoulder.

Outer Bearing, Replace

Replace outer bearing on all axles except 17,000 lb. axle as follows. The inner bearing must be removed before attempting to replace the outer bearing.

1. Using a punch of suitable length, tap bearing outer race away from bearing retainer ring, Fig. 12. Then remove retaining ring from hub, Figs. 12 and 13.
2. Press bearing from hub, Figs. 14 and 15.
3. Place axle shaft spacer (11,000 and 15,000 lb. axles) and inner race and roller assembly in hub with larger O.D. of roller assembly toward outer end of hub. Then position bearing cup in hub with thin edge of cup toward outer end of hub. Press cup into hub until clearance is obtained for retainer ring installation.
4. Install retainer ring. Then press bearing cup into positive contact with retainer ring. *Note: The bearing cup-to-retainer ring seating procedure is essential to assure that an accurate wheel bearing adjustment will be obtained, and that the adjustment will not loosen up during subsequent vehicle operation.*

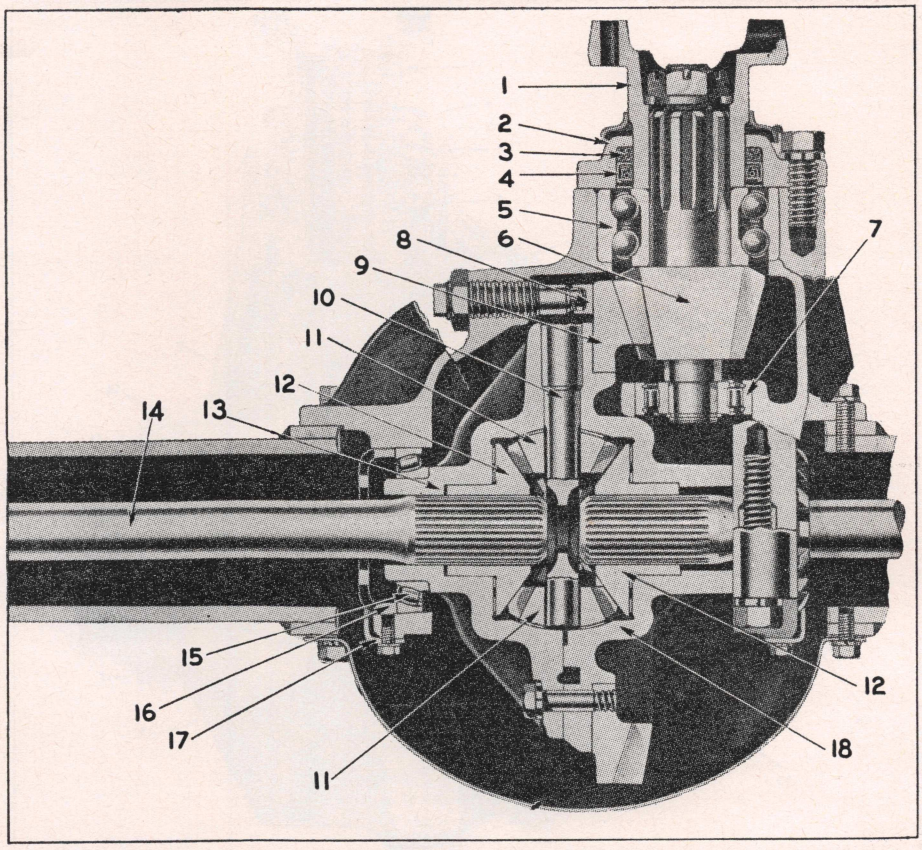

Fig. 6 Full-floating rear axle of 11,000 lbs. rated capacity used on 1½ and 2 ton trucks

1. Universal Joint Yoke
2. Pinion Bearing Retainer and Oil Seal
3. Oil Seal Packing
4. Oil Seal
5. Front Pinion Bearing
6. Drive Pinion
7. Rear Pinion Bearing
8. Ring Gear Thrust Pad
9. Ring Gear
10. Differential Spider
11. Differential Pinion (Spider) Gear
12. Differential Side Gear
13. Differential Case—Left Half
14. Axle Shaft
15. Differential Bearing
16. Differential Bearing Adjusting Nut
17. Adjusting Nut Lock
18. Differential Case—Right Half

WHEEL BEARINGS, ADJUST

Before checking wheel bearing adjustment, make sure brakes are fully released and do not drag. Check bearing play by grasping tire at top and pulling back and forth or by using a pry bar under tire. If bearings are properly adjusted, movement of brake drum in relation to brake flange plate will be barely noticeable and wheel will turn freely. If movement is excessive, adjust bearings as follows:

1. Remove axle shaft and raise vehicle until wheel is free to rotate.
2. Disengage tang of nut lock from lock nut and remove them from axle housing tube.
3. Using appropriate tool, tighten nut to specifications given below, at the same time rotating hub to make sure that all bearing surfaces are properly seated. Then back off adjusting nut one flat or notch.
   a. On 5200 and 7200 axles, tighten adjusting nut to 50-60 ft-lbs. and back off nut ⅛ turn to align nearest slot with short tang on nut lock.
   b. On 11,000 lb. axle, tighten adjusting nut to 75-100 ft-lbs. and back off nut ⅛ turn to align nearest slot with short tang on nut lock.
   c. On 15,000 lb. axle, tighten adjusting nut to 75-100 ft-lbs. and back it off to align nearest slot with short tang on nut lock.
   d. On 17,000 lb. axle, tighten adjusting nut to 65 ft-lbs. and back it off $\frac{1}{16}$ to ¼ turn to align slot with short tang on nut lock.
4. Insall nut lock.
5. Make sure wheel turns freely. Then install lock nut and tighten to specifications given below. Bend tang of nut lock over flat or slot of lock nut.
   a. On 5200 and 7200 lb. axles, tighten lock nut to 175 ft-lbs.
   b. On 11,000 and 15,000 lb. axles, tighten lock nut to a minimum of 250 ft-lbs.
   c. On 17,000 lb. axles, tighten lock nut to 135 ft-lbs.
6. Lower vehicle and install axle shaft.

DIFFERENTIAL CARRIER

Major operations on the differential carrier assembly may be performed without removing the rear axle assembly

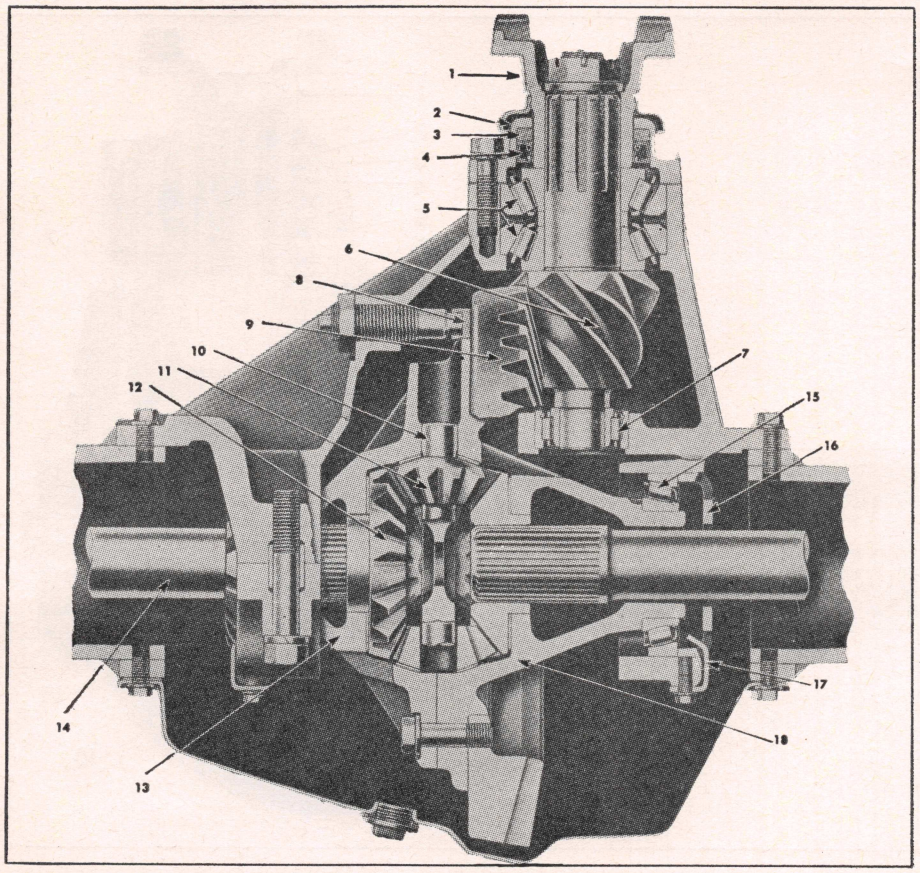

Fig. 7 Full-floating rear axle 15,000 and 17,000 lbs. rated capacity used on 2 and 2½ ton trucks

1. Universal Joint Yoke
2. Pinion Bearing Retainer and Oil Seal
3. Oil Seal Packing
4. Oil Seal
5. Pinion Bearing Assembly
6. Drive Pinion
7. Rear Pinion Bearing
8. Ring Gear Thrust Pad
9. Ring Gear
10. Differential Spider
11. Differential Pinion (Spider) Gear
12. Differential Side Gear
13. Differential Case (Left Half)
14. Axle Shaft
15. Differential Bearing
16. Differential Bearing Adjusting Nut
17. Adjusting Nut Lock
18. Differential Case (Right Half)

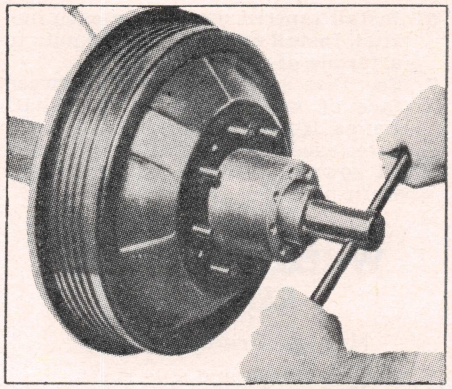

Fig. 10 Removing bearing adjusting nut lock nut

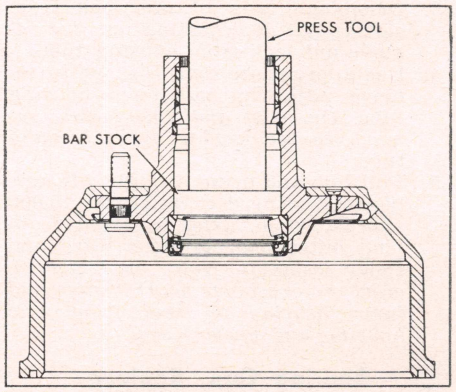

Fig. 11 Removing hub inner bearing cup

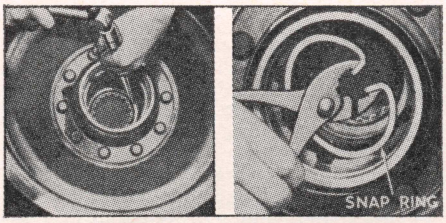

Fig. 12 Removing bearing retainer. 5200 and 7200 lb. axles

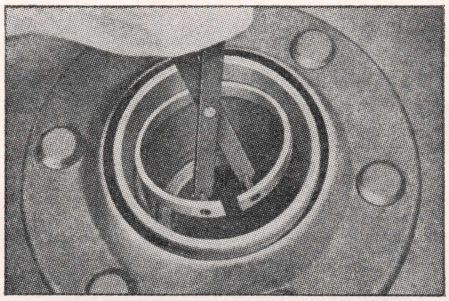

Fig. 13 Removing bearing retainer ring. 11,000 and 15,000 lb. axles

from the vehicle. After removing the axle shafts, remove the differential carrier assembly from the axle housing.

To facilitate adjusting of pinion depth in the ring gear, there are four shims available for service use. They are .012, .015, .018 and .021″.

If the orginal ring gear and pinion are to be used, it is advisable to replace the same thickness of shims in the carrier housing counterbore that were removed.

If a new ring gear and pinion are used, one .021″ shim should be used as a standard starting setup.

Checking Pinion Depth

Note—Details on tooth patterns and method of checking ring gear and pinion backlash are given in the Timken and Eaton axle chapters. Backlash between ring gear and pinion in Chevrolet axles are .003-.006″ on 5200 lb. axles and .005-.008″ on all others.

1. Coat the ring gear teeth lightly with red lead or prussian blue. Then turn the pinion shaft several revolutions in both directions.
2. If the pinion depth is correct, the tooth pattern will be centered on the pitch line and toward the toe of the ring gear.
3. If the pattern is below the pitch line on the ring gear teeth, the pinion is too deep and it will be necessary to remove the pinion assembly and increase the shim thickness between pinion bearing and carrier.
4. If the pattern is above the pitch line on the ring gear teeth, the pinion is too shallow and it will be necessary to remove the pinion and decrease the shim thickness between pinion bearing and carrier.

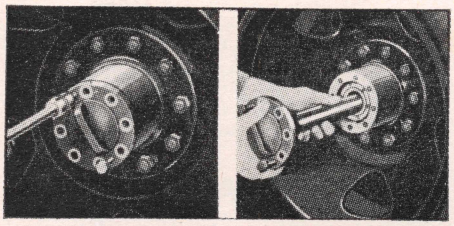

Fig. 8 Removing axle shaft. 5200 and 7200 lb. axles

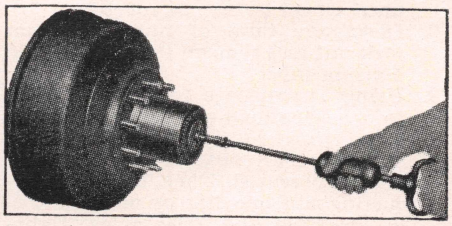

Fig. 9 Removing axle shaft. 11,000 and 15,000 lb. axles

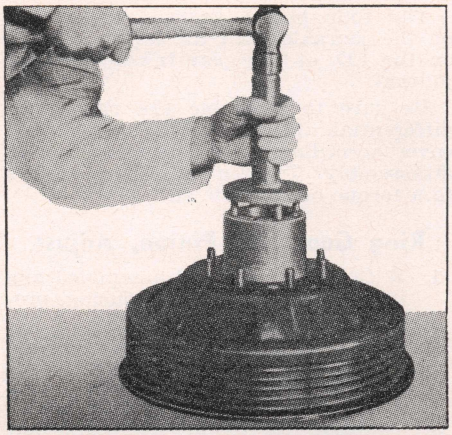

Fig. 14 Removing hub outer bearing. 5200 and 7200 lb. axles

5. Changing the pinion depth will make some change in backlash; therefore, it will be necessary to readjust the backlash.

Ring Gear Thrust Pad, Adjust

After the differential carrier is assembled and properly adjusted, install the thrust pad and tighten the adjusting screw until the bronze tip engages the back of the ring gear while the gear is rotated. Back off the screw 1/12 turn and tighten lock nut, Fig. 16. Make sure screw does not turn during the locking process.

CHEVROLET TWO SPEED AXLE

Manufactured by Chevrolet this unit, Fig. 17, is offered as an option in both the 15,000 and 17,000 lb. capacities. Torque is transmitted through the differential case through eight teeth on the four planetary pinions. The primary gears are hypoid type. The straddle-mounted drive pinion and ring gears operate to produce the high range reduction, the planet and sun gears being locked to revolve with the ring gear.

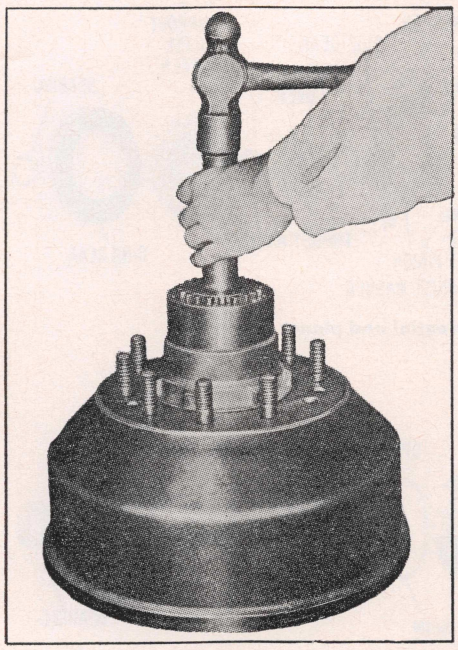

Fig. 15 Removing hub outer bearing. 11,000 and 15,000 lb. axles

A positive, quick acting, two-way vacuum system actuates the shift collar and sleeve. The hand control is located on the gear shift lever, permitting simultaneous transmission and axle shifts so that full advantage may be taken of all forward ratios.

Whenever service on the vacuum shift system becomes necessary the push rod should be adjusted so that the distance between the outer faces of the stop washers on the push rod should be 3½″ as shown in Fig. 18.

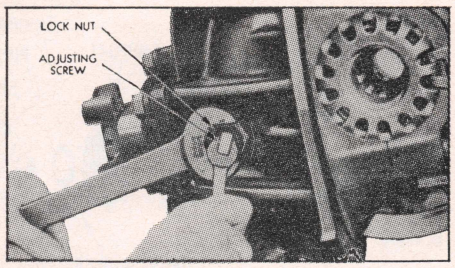

Fig. 16 Ring gear thrust pad adjustment

Differential Carrier Removal

1. Use slide hammer to pull axle shafts out about 8″ to clear differential.
2. Remove vacuum cylinder hoses.
3. Split rear universal joint and slide propeller shaft forward and swing out of the way.
4. Before removing all the carrier-to-housing attaching bolts, install a long drift through one of the upper holes to support the carrier.
5. When all attaching bolts are removed, slide a roller jack under the carrier and wheel it out from under the truck.

Disassembly, Fig. 19

1. Remove anchor from left side of carrier.
2. Remove vacuum shifter assembly.
3. Drive out shifter yoke shaft.
4. Slide shifter yoke and sleeve to the left, removing these parts from end of sun gear.
5. Remove adjusting nut locks.
6. Remove oil trough.
7. Remove ring gear thrust pad.
8. Remove bearing caps and adjusting nuts.
9. Remove differential and planet assembly from housing, using care to see that differential side bearing outer races are not dropped.

Pinion Disassembly

1. Referring to Fig. 20, loosen pinion bearing oil seal retainer bolts.
2. Tap on deflector flange with soft

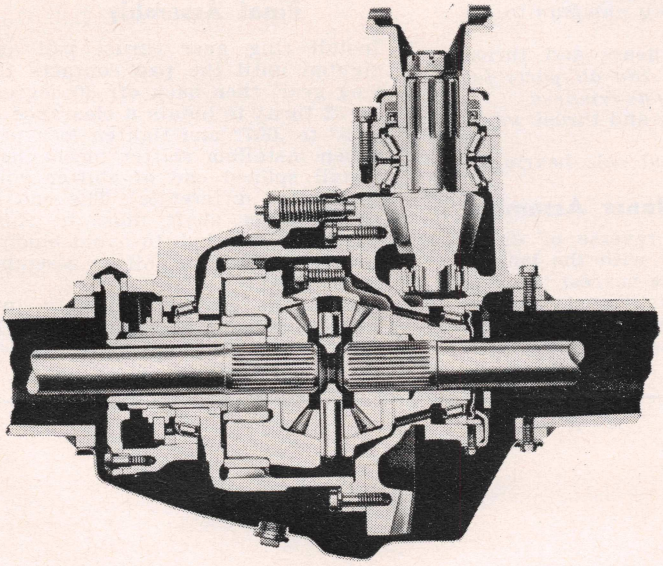

Fig. 17 Cross section of Chevrolet two-speed axle

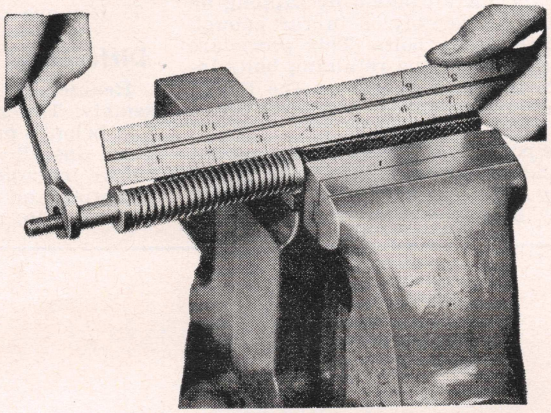

Fig. 18 Adjusting vacuum shift push rod

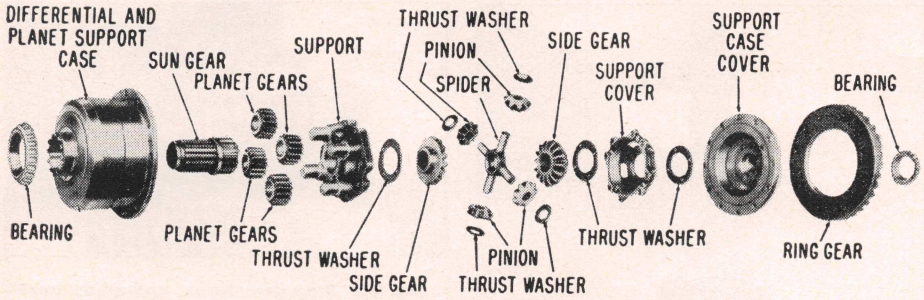

Fig. 19 Exploded view of differential and planet assembly

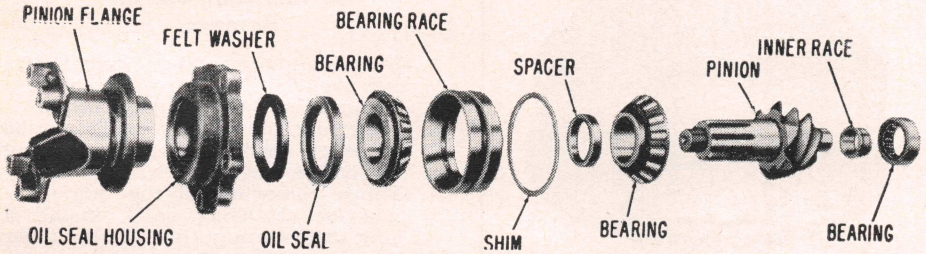

Fig. 20 Exploded view of pinion assembly

hammer, driving out pinion assembly gradually from carrier housing while continuing to remove the pinion oil seal retainer bolts.

3. Remove shims from carrier housing, noting the number and thickness of shims present in back of double thrust bearing. *If flange is removed from pinion a slide hammer may be used to pull pinion out of housing.*
4. Remove rear pinion bearing.
5. If not already removed, separate flange from pinion.
6. Remove pinion oil seal retainer and seal.
7. Press double thrust bearing off pinion.
8. Press inner race off end of pinion.

Pinion Assembly

Reverse the disassembly procedure to assemble the pinion. Apply a torque of 160-280 lb. ft. on the pinion nut and install cotter pin. *Do not loosen nut to install cotter pin; if necessary tighten nut until cotter pin can be installed.*

Install pinion bearing shims in carrier housing and install pinion by tapping on flange until assembly is in far enough to start retaining bolts. This procedure is necessary since the retaining bolts interfere with the deflector on the flange until they are threaded in several turns. Tighten bolts to 90-100 lb. ft.

If it is possible to measure any amount of "in and out" movement of the pinion assembly at this point, remove the pinion assembly and check for the following: (a) pinion nut drawn down to 160-280 lb. ft. torque; (b) pinion bearing preload (15-25 in. lb. for new bearing, 5-15 in. lb. if used parts); (c) one pinion depth adjusting shim installed and in place.

Differential and Planet Disassembly

1. Mark ring gear, differential, planet support case and case cover for alignment by scribing or marking lines on case, cover and gear.
2. Remove planet cover, sun gear and planet gears. *Mark or tag all gears so that they may be reassembled exactly as removed. Planet gears are supplied only as a set.*
3. List differential and planet support off case cover.
4. Separate planet support and cover. *These parts are stamped on all four sides with matching numbers to assist in assembly.*
5. Remove spiders, gears and thrust washers. *Mark or tag all parts for reassembly exactly as removed.*
6. Remove side gears and thrust washers.
7. Remove differential side bearings.

Differential and Planet Assembly

Reassembly is the reverse of disassembly. The side gear with the longest hub belongs on the side nearest the ring gear. Install side gear thrust washers before installing side gears. Tighten differential and planet cover to a torque of 70-110 lb. ft.

The four planet gears are installed on the journals with the large chamfer on the I.D. of the gear toward base of journal.

Be sure to assemble the ring gear, differential, planet support case and cover according to the marks prior to disassembly. Tighten attaching screws to a torque of 85-95 lb. ft.

Ring Gear and Pinion, Adjust

1. With the differential assembled and installed in the carrier housing, proceed as follows:
2. Loosen right hand adjusting nut and tighten left hand adjusting nut. Use a spanner wrench on the right side and a drift and hammer on left side.
3. Continue tightening left hand nut until all backlash between ring gear and pinion is removed.
4. Back off left hand nut approximately two notches to a point where notch in nut is aligned with lock.
5. Tighten right hand nut firmly to force differential and planet in solid contact with left hand adjusting nut. Loosen right hand nut until it is free of its bearing, then retighten snugly against bearing. Tighten right hand nut from one to two notches more to a position in which a notch in nut aligns with lock. This method provides for the proper preload of bearings.
6. Mount a dial indicator on the housing and check backlash between ring gear and pinion which should be .003″ to .012″ (.005″ to .008″ preferred). If backlash is more than .012″ loosen right hand adjusting nut one notch and tighten left hand nut one notch If backlash is less than .003″, loosen left hand nut one notch and tighten right hand nut one notch.

Checking Pinion Depth

Check the pinion depth by coating the ring gear teeth with red lead or prussian blue and determine depth as outlined in the *Timken and Eaton Axle Chapters.*

Final Assembly

1. Install ring gear thrust pad and tighten until the pad contacts the ring gear, then back off 30 degrees (1/12 turn) to obtain a clearance of .005″ to .007″ and tighten lock nut.
2. When installing shifter mechanism, install splined end of shifter yoke to rear of differential. The end of shifter lever shaft must be flush with the lever hub to avoid binding when the vacuum shifter assembly is installed.
3. Install the carrier assembly into the axle housing and tighten attaching cap screws to a torque of 55-60 lb. ft.

Four Wheel Drive

For service procedure on the transfer case used with four-wheel drive trucks, see the Transfer Case Chapter

FRONT AXLE

1960-63

The front axle is a Spicer unit equipped with steering knuckles, Fig. 1. The differential carrier assembly is of similar design to the rear axle used on 1963 ½ ton trucks.

1957-59

The front axle is equipped with constant velocity universal joints. The differential carrier assembly is identical to the full-floating rear axle differential carrier used on ¾ ton trucks. Fig. 2 illustrates the construction of the constant velocity universal joints.

TOE-IN ADJUSTMENT

1957-59

The tie rod ends, Fig. 3, have a coarse thread on one end and a fine thread on the other end to permit accurate toe-in adjustment. *Caster and camber are inherent in the axle design and need not be adjusted.*

Toe-in checking procedures are the same as for Conventional models except that toe-in specifications are $\frac{1}{32}''$ to $\frac{5}{32}''$. Specified toe-in may be obtained by backing off or turning on the tie rod end, Fig. 2. One turn of the tie rod with fine thread affects the toe-in by approximately ¼", while one turn of the tie rod end with the coarse thread affects the toe-in by $\frac{9}{32}''$. *If tie rod and ends were disassembled from the axle, set the tie rod end centers initially at 49⅞" before taking measurements* (see Fig 4).

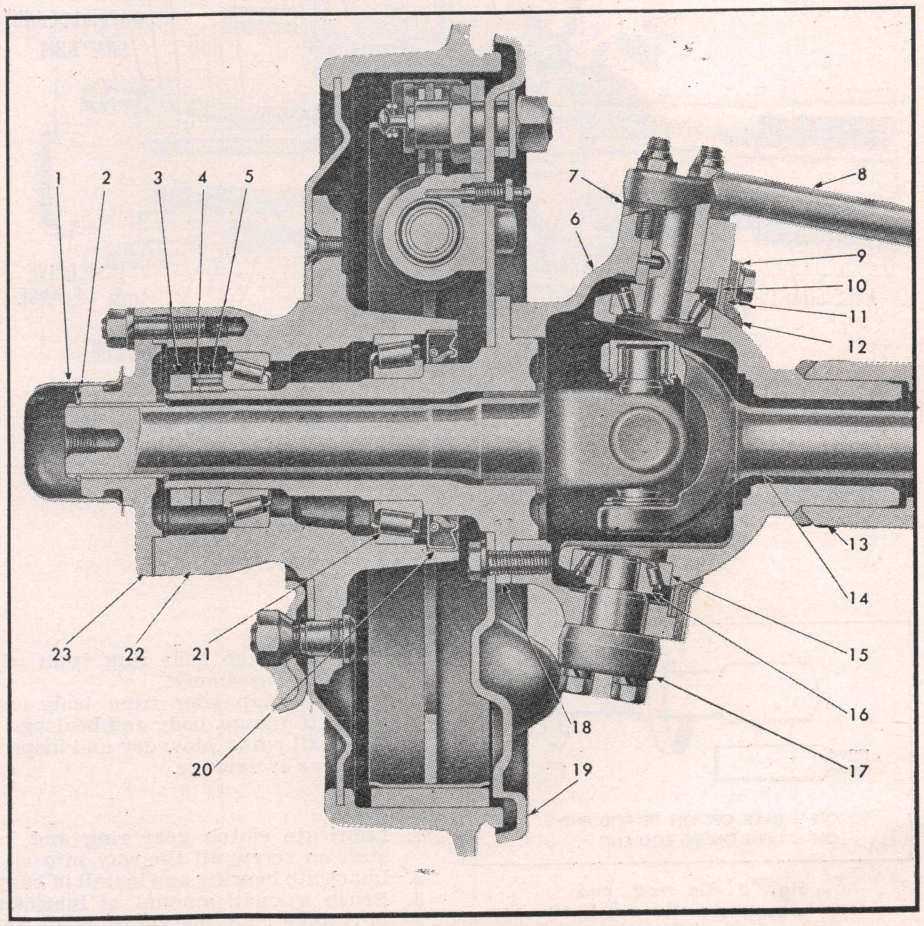

Fig. 1 Steering knuckle and wheel hub. 1963 Four Wheel Drive front axle

1 Hub Cap
2 Snap Ring
3 Lock Nut
4 Lock Ring
5 Adjusting Nut
6 Steering Knuckle
7 Shims
8. Steering Arm
9. Seal Retainer
10. Seal Ring
11 Rubber Seal
12 Felt Seal
13. Axle Housing
14. Axle Shaft
15. Bearing Cup
16. Bearing Cone
17 Bearing Retainer
18. Spindle
19. Brake Flange Plate
20. Wheel Bearing Seal
21 Wheel Bearing (Inner)
22. Wheel Hub
23. Drive Flange

KINGPIN TRUNNION BEARING

Front axle trunnion bearing adjustment is necessary only when there is excessive play in the steering system, irregular wear on tires or persistent loosening of the tie rod.

1. Raise front end of truck and place jack stands behind front springs.
2. Disconnect drag link and tie rod to allow independent movement of each steering knuckle.
3. Apply torque wrench to bearing retainer bolt and check torque necessary to turn steering knuckle. Knuckle should turn easily but have no play with 120-180 inch pounds torque.
4. If torque is too low, remove bearing retainer and remove shims up to .005".
5. Reinstall retainer, tighten bolts to 30-40 ft. lbs. and recheck torque necessary to turn knuckle.
6. If there is still excessive play, repeat Steps 3, 4 and 5. *Do not remove shims in excess of .010". If there is still excessive play after removing .010" shim, the steering knuckle should be disassembled and inspected for wear or damage.*

FREE WHEELING HUBS

1957-59

The purpose of the free wheel hubs, Fig. 5, is to reduce friction and wear by disengaging the front axle shafts, differential and drive line from the front wheels when the vehicle is operated under conditions where the front wheel drive is not needed. The engagement and disengagement of the free wheel hubs is a manual operation which must be performed at each front wheel. Both hubs must be in the fully locked or fully unlocked position. They must not be in the free wheeling position when low all wheel drive is used as the additional torque output in this position can subject the rear axle to severe strain and rear axle failure will result.

The hub is serviced as a unit and may be removed and installed as outlined below.

Removal

1. Turn hub key to set hub all the way to the "free" position.
2. Remove nuts retaining hub cap to wheel hub and remove clutch gear ring, cap and screw assembly; then remove drive pins and gasket from body or cap.
3. Remove snap ring from end of axle shaft.
4. Pull drive flange, body and bearing assembly from shaft and studs. Remove shim from studs, if present.

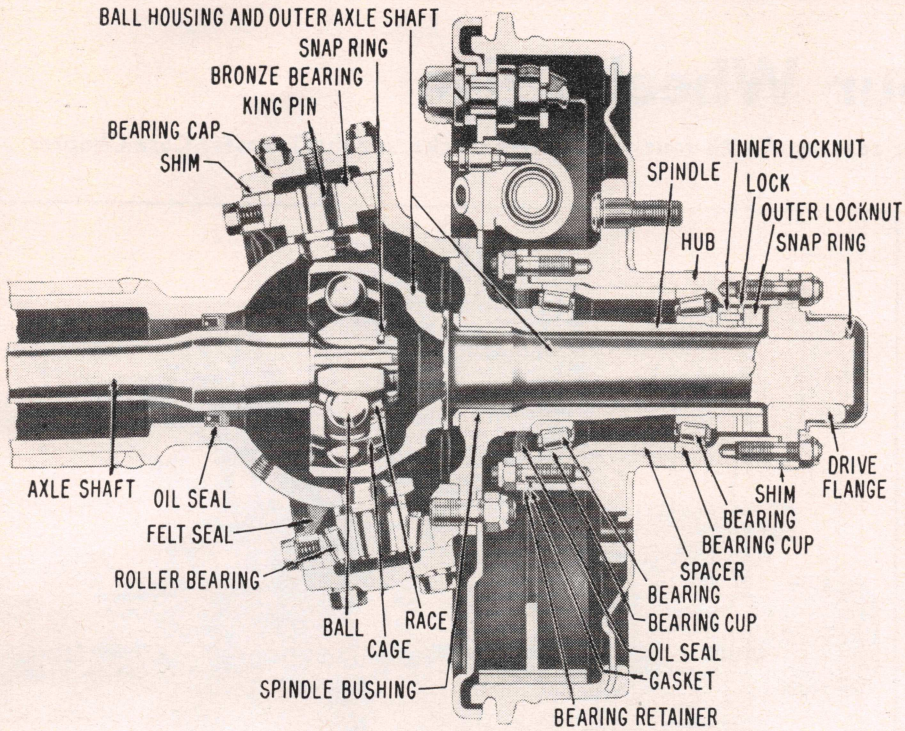

Fig. 2 Front axle details. 1957-59 Four Wheel Drive

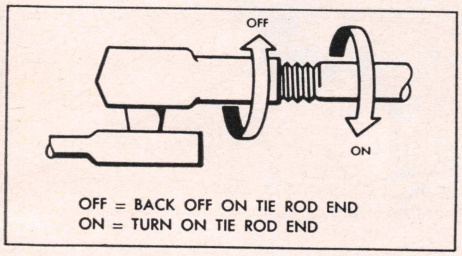

Fig. 3 Tie rod end adjustment for toe-in

If Reading Is:		Left (Fine)	Right (Coarse)	Toe-in (Corrected)
3/16 Toe-out		3 On	4 Off	1/16
9/32 Toe-out		2 On	2 Off	1/16
1/4 Toe-out		0	1 Off	1/32
7/32 Toe-out		0	1 Off	1/16
3/16 Toe-out		1 Off	0	1/16
5/32 Toe-out		1 Off	0	3/32
1/8 Toe-out		1 Off	0	1/8
3/32 Toe-out		5 On	5 Off	1/16
1/16 Toe-out		4 On	4 Off	1/16
1/32 Toe-out		3 On	3 Off	1/16
0		2 On	2 Off	1/16
1/32 Toe-in	Proper	0	0	1/32
1/16 Toe-in	Value	0	0	1/16
3/32 Toe-in	of	0	0	3/32
1/8 Toe-in	Toe-in	0	0	1/8
5/32 Toe-in		0	0	5/32
3/16 Toe-in		3 Off	3 On	3/32
7/32 Toe-in		4 Off	4 On	3/32
1/4 Toe-in		5 Off	5 On	3/32
9/32 Toe-in		1 On	0	1/32
5/16 Toe-in		1 On	0	1/16
11/32 Toe-in		1 On	0	3/32
3/8 Toe-in		0	1 On	3/32

Fig. 4 Toe-in correction table

Disassembly

1. Remove clutch gear ring from cap and screw assembly.
2. Remove snap ring from body and separate flange, body and bearing.
3. Wash all parts, blow dry and inspect for wear or damage.

Assembly

1. Lubricate clutch gear ring and install on screw all the way into cap.
2. Lubricate bearing and install in body.
3. Brush a small amount of lubricant on flange and install in body and bearing.
4. Install snap ring in flange to retain bearing.

Installation

1. Install shim, if needed, on wheel hub and slide flange, body and bearing assembly over studs and onto splines of axle shaft; then install snap ring on end of shaft.
2. Add shims .010″ at a time, to a maximum of .030″, until sufficient to prevent contact between interior surface of axle housing ball end and ball joint housing, but not so thick as to cause excessive wear to the spindle bushing or interfere with the installation of snap ring.
3. Install drive pins in body and install gasket on body.
4. Lubricate drive pins and clutch screw and install clutch gear ring, body and screw over studs and pins.
5. Install retaining nuts and tighten to a torque of 18-20 lbs. ft.

1961-63

Removal

1. Turn hub key to set hub "free" or disengaged position.

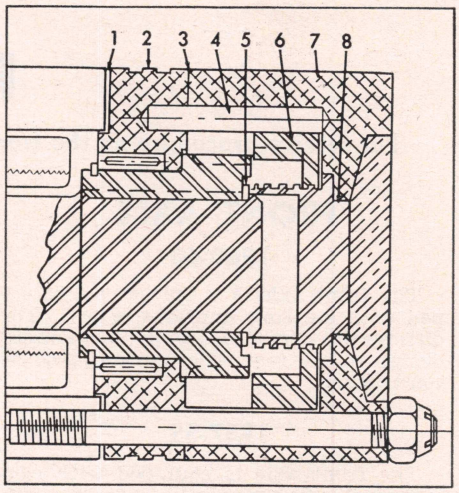

Fig. 5 Free-wheeling hub. 1957-59

1. Shim
2. Body
3. Gasket
4. Drive pin
5. Snap ring
6. Clutch gear ring
7. Cap
8. Screw and key ass'y

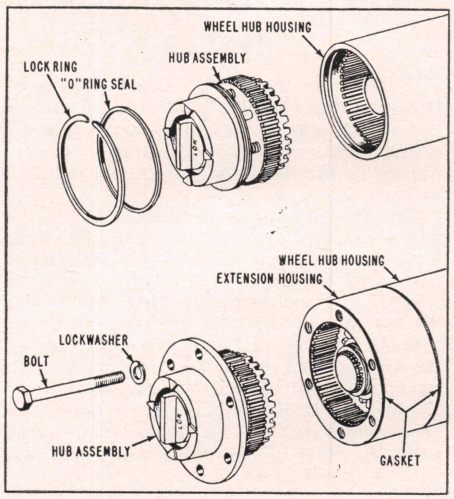

Fig. 6 Front free wheeling hub installation. 1961-63 Four wheel drive

2. Remove outer clutch ring, cap and cam assembly as follows, Fig. 6.
   a. On models with type of hub shown in upper view, Fig. 6, remove internal snap ring from hub and pull assembly out of hub.
   b. If the type hub shown in lower view, Fig. 6, is used, remove bolts retaining hub cap to hub, pull assembly and extension housing away from hub and remove gaskets.
3. Remove snap ring from end of axle shaft.
4. Pull bearing and inner clutch ring assembly from shaft.

Disassembly

1. Turn key to engaged position to release pressure from springs.
2. With suitable drift punch, remove key knob retaining pin through holes in outer clutch gear.

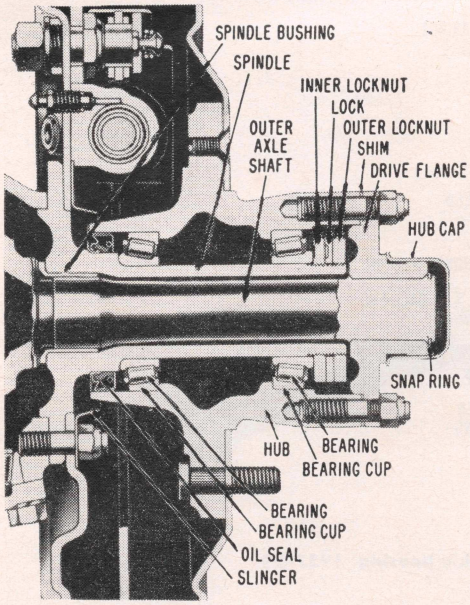

Fig. 7 Front wheel details on 1957-59 ¾ and 1 ton models

3. Lift key knob and retaining flange from inner clutch gear springs.

Assembly

1. All parts should be cleaned and lubricated during assembly to prevent deterioration before unit is placed in service. Replace all gaskets and "O" rings.
2. Place springs in holes in clutch gear.
3. Place retaining flange down over springs, lining up "locking or aligning" pin in position hole.
4. Install key knob into center of assembly and install retaining pin.

Installation

1. Place bushing and inner clutch ring over axle spline with clutch teeth outward. Slide on until bushing bottoms in wheel hub and install snap ring in axle shaft.
2. Install outer clutch ring and cam assembly as follows, referring to Fig. 6.
   a. On models with type of hub shown in upper view, Fig. 6, start assembly straight into hub, taking care to work "O" ring past snap ring groove in hub. Install snap ring in hub.
   b. If type of hub shown in lower view, Fig. 6, is used, place gasket on hub, align mounting holes in clutch ring and cap with holes in hub and install bolts and lockwashers.
3. Turn knob to check for proper locking.

FRONT AXLE

Remove and Install

1. Disassemble propeller shaft from front axle differential.
2. Raise front of truck and support it with jacks behind front springs.

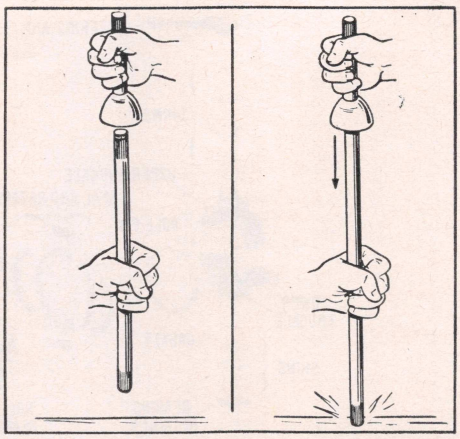

Fig. 9 Assembly of axle shaft and U-joint. 1957-59

3. Disconnect drag link from steering arm.
4. Disconnect brake hoses from frame fittings.
5. Disconnect shock absorbers from spring clamp plate or axle brackets.
6. Separate axle from truck springs.
7. Roll front axle from under truck.
8. Install in reverse order of removal.

AXLE SHAFT, REPLACE

1957-59 ½ Ton Models

1. Raise truck and remove wheel.
2. Remove drive flange nuts, Fig. 7.
3. Remove snap ring retaining drive flange to axle shaft.
4. Remove drive flange and shim. *Two tapped holes are provided in flange to enable studs to be installed to force drive flange from shaft in event of tight fit. If necessary to use these holes, remove and save protective plastic plugs.*
5. Remove outer lock nut.
6. Remove lock with hooked wire or similar instrument; then remove inner lock nut.
7. Slip hub off spindle.
8. Remove brake and spindle.
9. Remove axle shaft and U-joint.
10. Install by reversing removal procedure.

1957-59 ¾ and 1 Ton Models

1. Jack up truck and remove wheel.
3. Remove snap ring retaining drive flange to axle shaft on all except dual rear wheel installations.
4. Remove drive flange and shim. *Two tapped holes are provided in flange to enable studs to be installed to force drive flange from shaft in event of tight fit. If necessary to make use of these holes, remove and save protective plugs.*
5. Remove outer lock nut, lock and inner lock nut.
6. Remove drum and hub.
7. Remove brake and spindle mounting nuts and remove slinger.
8. Remove axle shaft and U-joint.
9. Install by reversing removal procedure.

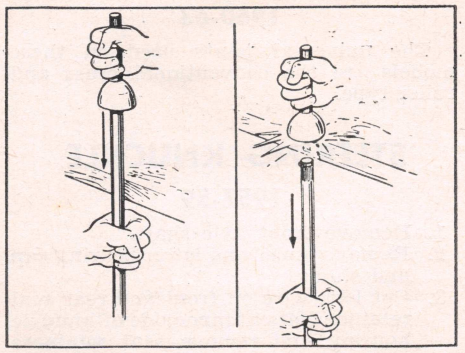

Fig. 8 Disassembly of axle shaft and U-joint. 1957-59

1960-63

1. Support vehicle with front wheel free.
2. Place drain pan under wheel and remove hub grease cap.
3. Remove snap ring from axle shaft.
4. Remove drive flange as follows:
   a. On K10 models, pull splined drive flange from shaft and hub and remove spacer from hub.
   b. On K20 models, remove stud nuts and washers, drive flange and gasket.
5. Remove bearing lock nut, lock ring and adjusting nut.
6. Remove wheel, hub and drum as a unit.
7. Remove bolts holding brake flange plate and spindle to steering knuckle.
8. Remove flange plate from steering knuckle and support plate so brake hose will not be damaged.
9. Slide spindle from shaft.
10. Remove axle shaft and joint assembly.
11. Reverse foregoing procedure to install. However, adjust wheel bearings by tightening the nut using a T-handle wrench (12" long on each side). Rotate drum and tighten snug. Loosen nut 45 degrees and assemble lockwasher by loosening nut to nearest hole, then assemble outer nut. Tighten nut to 40 ft-lbs. minimum.

U-JOINT REPAIRS

1957-59

1. Clean grease from parts.
2. Hold axle shaft as shown in Fig. 8 and rap face of joint sharply against protected vise or edge of bench. *This causes snap ring on end of axle shaft to contract and permit shaft and joint to separate.*
3. Tilt race and cage and remove balls.
4. Align race and cage and pull these parts from ball housing.
5. Disassemble cage from race.
6. Examine all parts for wear and damage.
7. Replace worn parts and assemble in reverse order of disassembly, assembling joint to axle shaft as shown in Fig. 9.

1960-63

The universal joints used on these models are the conventional cross and roller type.

STEERING KNUCKLE

1957-59

1. Remove front axle shaft.
2. Remove upper and lower bearing cap and shims.
3. Cut lock wire on front and rear seal retainer bolts at inner side of knuckle housing and remove seal retainers and seals, Fig. 10.
4. Drive roll pins from flanges of upper and lower knuckle housings.
5. Separate upper and lower housings.
6. Tap bearing cups from housings.
7. Pull bronze bearing from upper trunnion and remove key.
8. Remove bearing from lower trunnion.
9. Reverse procedure to assemble and install. *However, when installing bearings, install .010" shims at each bearing. Install bearing cap and tighten bolts to 50-60 lbs. ft. torque. Apply torque wrench to bearing cap bolt and check torque necessary to turn steering knuckle. Knuckle should move easily but have no play with 14-20 lbs. ft. torque. Ideal torque is 15-16 lbs. ft. If not within limits, remove lower bearing cap and add shims to decrease torque or remove shims to increase torque.*

1960-63

1. Remove axle shaft and U-joint.
2. Disconnect steering rod from steering arm.
3. Disconnect tie rod from steering knuckle.
4. Remove seal retainers (2 pieces) from knuckle.
5. Remove felt seal, rubber seal and seal ring from knuckle and let them hang on axle housing.
6. Remove upper and lower bearing retainers and shims from knuckle.
7. Remove knuckle from housing and remove bearing cones from axle housing.

Installation

1. Install bearing cones and bushings in cups in axle housing.
2. Place steering knuckle over axle housing yoke and install bearing retainers. Use same shims removed, or equivalent amount, and tighten bearing retainer bolts and nuts to 25 ft-lbs. torque. *On K20 models, position key in kingpin and install in bushing by aligning kingpin and key with keyway in bushing.*
3. Check bearing preload as follows:
   a. On 44-5F models, use a spring scale positioned in the tie rod hole. Knuckle should turn with 11-20 lbs. pull. Add shim to decrease preload; remove shim to increase preload.
   b. On 44-5HDF models, use a torque wrench positioned on upper bearing retainer nut. Knuckle should turn with a 15-35 ft-lbs. torque load. Adjust preload by increasing or decreasing shim packs at lower bearing only. Upper shim pack should be .060" thick.
4. Position seal ring, rubber seal and felt seal against inboard face of knuckle and align bolt holes. Install seal retainer (2 pieces).
5. Connect steering rod and install axle shaft.

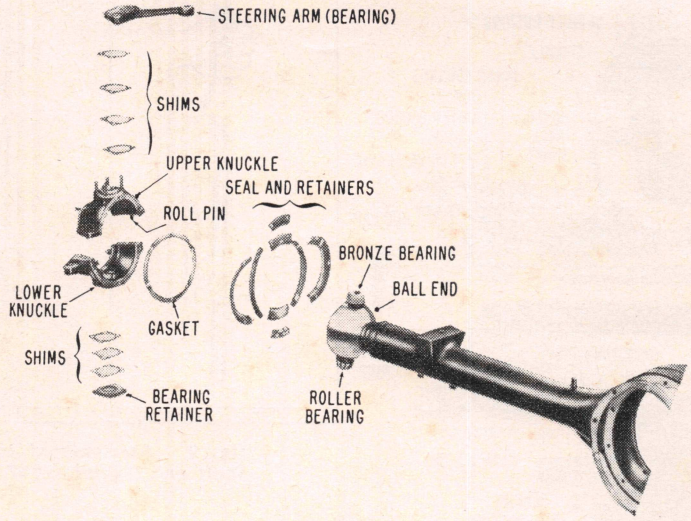

Fig. 10 Steering knuckle housing. 1957-59

WHEEL BEARINGS, ADJUST

10 Series

1. Remove wheel and tire.
2. Remove dust cap from end of hub and remove spindle cotter pin.
3. Tighten adjusting nut to 15 ft-lbs while rotating hub in both directions.
4. Back off nut one flat and insert new cotter pin. If nut and spindle hole do not line up, back off slightly to align hole.
5. Spin hub to make sure it turns freely and install dust cap and wheel assembly.

20-30 Series, I Beam 50-60 Series (Except S69, T60, T60H)

1. Remove wheel assembly, hub dust cap and spindle cotter pin.
2. Tighten adjusting nut to 40 ft-lbs torque while rotating wheel in both directions.
3. Back off nut ⅓ turn and install cotter pin. If spindle hole does not line up, tighten nut until alignment is obtained.
4. Spin hub to make sure it turns freely. Lock cotter pin, install hub dust cap and wheel assembly.

I Beam, P20-30 Series

1. Remove wheel assembly, hub dust cap and spindle cotter pin.
2. Tighten adjusting nut to 33 ft-lbs while rotating wheel in both directions.
3. If a slot in nut lines up with either of two holes in spindle, back off nut 1/6 turn until next slot lines up with next hole and insert cotter pin. If there was no alignment after tightening nut, back off until slot lines up with nearest hole in spindle and insert cotter pin. *Note: At all times nut should be backed off no more than 1-6 turn.*
4. Install hub dust cap and wheel.

I Beam 80 Series, S69, T60, T60H

1. Remove wheel assembly, hub dust cap and spindle cotter pin.
2. Tighten adjusting nut to 60 ft-lbs while rotating hub in both directions.
3. Back off nut ⅓ turn and install cotter pin. If spindle hole does not line up, tighten nut until alignment is obtained.
4. Spin drum to make sure it rolls freely. Lock cotter pin, install hub plate or cap and wheel assembly.

Front End & Steering Section

WHEEL ALIGNMENT

1963 Coil Spring Suspension

Caster and camber adjustments are made by means of shims located between upper control arm shaft and mounting bracket attached to suspension crossmember. A series of convex and concave spacers with flat opposite sides are used. These spacers allow a positive cross shaft-to-bracket attachment regardless of the number of shims used. Shims may be changed at either front or rear to vary caster, or at both points to vary camber.

Caster

1. Measure frame angle at "B", Fig. 1.
2. Check caster on alignment machine.
3. Add angle "B" and caster angle to determine *frame corrected angle.*
4. Measure dimension "A", Fig. 1.
5. Using dimension "A" and chart for appropriate vehicle, Fig. 2, find recommended caster angle.
6. The frame corrected angle should correspond to the recommended angle on the chart within plus or minus ¼ degree. Make necessary changes to bring caster angle within limits.

Camber

1. Measure camber on alignment machine.
2. Measure dimension "A", Fig. 1.
3. Using dimension "A" and chart for appropriate vehicle, find recommended camber angle.
4. If angle in Step 1 does not correspond to the recommended angle in the chart within plus or minus ¼ degree, make necessary changes.

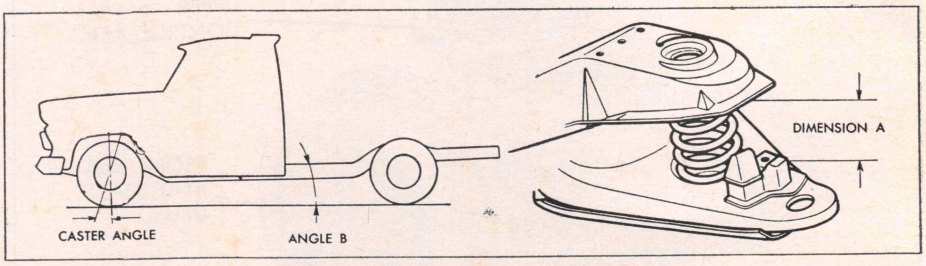

Fig. 1 Caster-camber adjustment. 1963 coil spring suspension

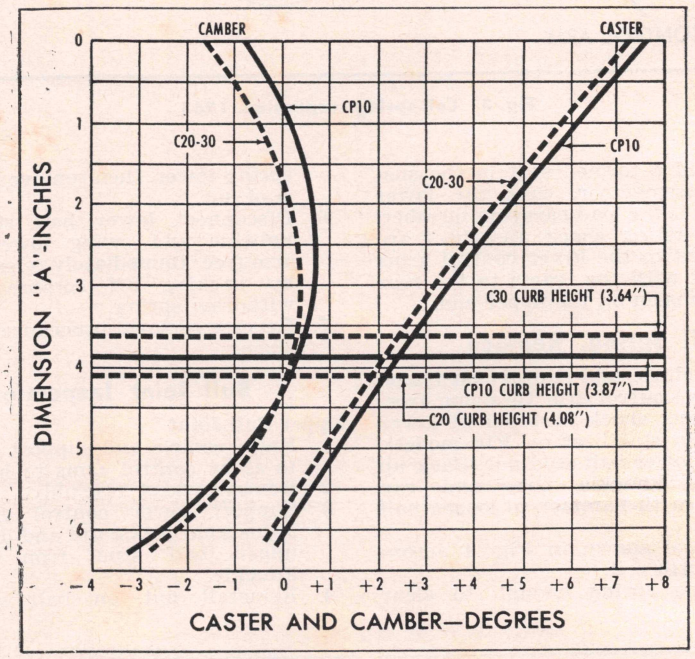

Fig. 2 Caster-camber chart. 1963 coil spring suspension

1960-62 Torsion Bar Suspension

10 to 40 Series

Caster and camber adjustments are made by means of shims between the upper control arm spacer and the bracket attached to the frame. Shims may be changed at either front or rear bolt to change caster or at both points equally to change camber.

To reduce the number of shims that have to be handled, use .0598″ or .1196″ shims. The shim pack should not exceed ⅝″ (twenty one .0299″ shims). The total difference in shims between the front and rear bolts should not exceed .33″ (eleven .0299″ shims).

For caster changes, one shim added to the rear bolt changes caster —2/5° and camber —1/60°. One shim removed from the rear bolt changes caster +2/5° and camber —1/30°.

For camber changes, one shim added or removed from both bolts changes camber (plus or minus) ⅓°.

After obtaining the proper setting, tighten the shaft-to-bracket nuts and recheck camber and caster. Then torque the nuts to 60-75 ft lbs on Series 10, 85-100 ft lbs on Series 20 and 120-155 ft lbs on Series 30 and 40. These torques should be rechecked at the end of the first 1000 miles of driving when these adjustments are made.

50 to 80 Series

Caster adjustments are made by changing the location of the lower control arm shafts with reference to the notched plates welded to the crossmember. Camber adjustments are made by means of shims between the upper control arm brackets and the frame.

For caster adjustment, check to determine the amount of change required. Then mark the location of the control arm shaft with reference to the notched attaching plate. Loosen the shaft-to-crossmember bolts to free the shaft from the notches in the attaching plates. Move shaft rearward to decrease caster or forward to increase caster. Moving shaft one notch changes caster approximately ½°.

For camber adjustment, determine the amount of change required. Then remove two upper nuts and bolts attaching control arm bracket to frame and loosen two lower bolts. Raise vehicle at the crossmember until control arm bracket can be pried away form support. Insert or remove shim at both bolts equally as required. The addition of a shim at both bolts increases camber about ½°.

COIL SPRING SUSPENSION

1963

This suspension, Fig. 3, consists of upper and lower control arms pivoting on steel threaded bushings on upper and lower arm shafts which are bolted to the front suspension crossmember and bracket assembly. These control arms are connected to the steering knuckle through pivoting ball joints. A coil spring is located between the lower con-

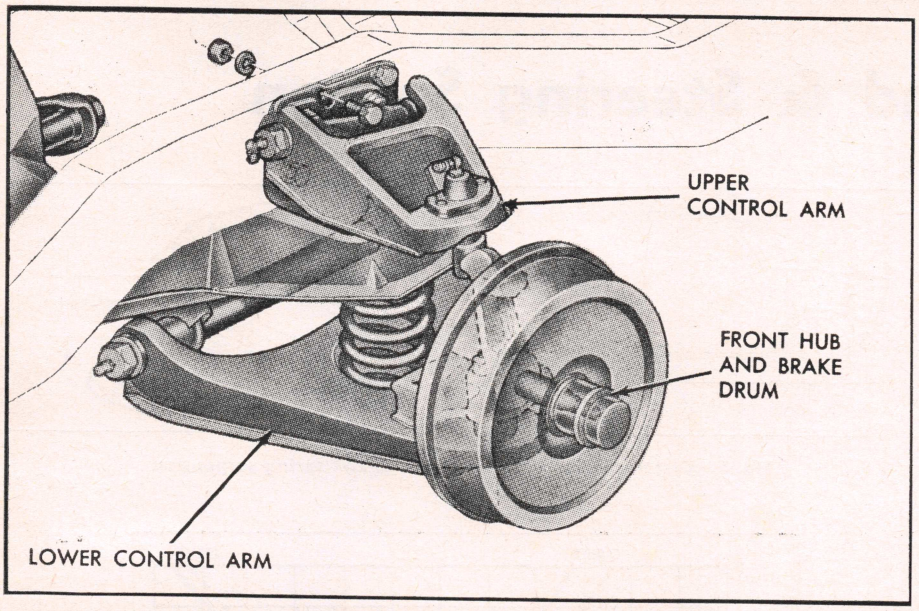

Fig. 3 Coil spring suspension. 1963

trol arm and a formed seat in the suspension crossmember, thus the lower control arm is the load-carrying member. The double-acting shock absorbers are also attached to the lower control arms and connect with the frame to the rear of the suspension on the upper end.

Coil Spring, Replace

1. Raise vehicle and support on frame to allow control arm to swing free.
2. Disconnect shock absorber at lower end (also stabilizer on P10 model).
3. Loosen lower ball stud nut. Back up steering knuckle boss and rap sharply with hammer to loosen ball stud.
4. Place tool shown in Fig. 4 across top of fifth coil.
5. Compress spring enough to clear spring tower, then remove lower ball stud nut.
6. Disconnect lower ball stud from knuckle and swing lower control arm free. Immediately release spring by backing off compressor, and withdraw spring.
7. Reverse removal procedure to install spring.

Ball Joint Inspection

Upper Ball Joint

1. Raise vehicle and support on frame to allow control arms to hang free.
2. Remove wheel assembly.
3. Support lower control arm with adjustable jackstand and disconnect upper ball stud from steering knuckle.
4. Reinstall nut on ball stud and measure torque required to rotate stud with torque wrench. If torque is not within 5 to 10 ft-lbs, replace ball joint.

Lower ball joints are a loose fit when not connected to the steering knuckle. Wear may be checked without disassembling the ball stud as follows:

Lower Ball Joint

1. Support weight of control arms at wheel hub and drum.
2. Measure distance between tip of ball stud and tip of grease fitting below ball joint, Fig. 5.
3. Move support to control arm to allow wheel hub and drum to hang free. Measure distance as indicated in Step 2. If the distance in measurements exceeds .060" ($\frac{1}{16}$") ball joint is worn and should be replaced.

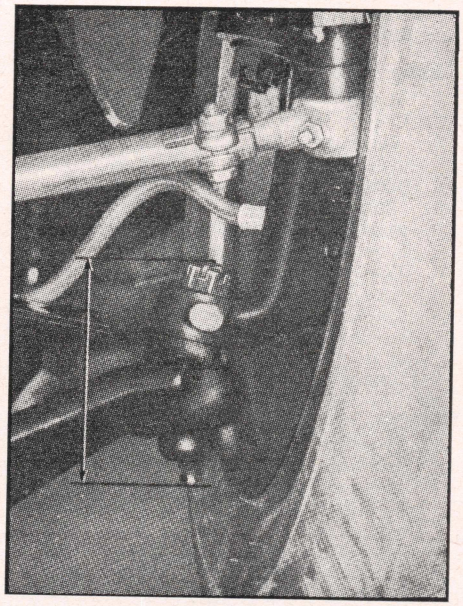

Fig. 5 Checking lower ball joint for wear. 1963

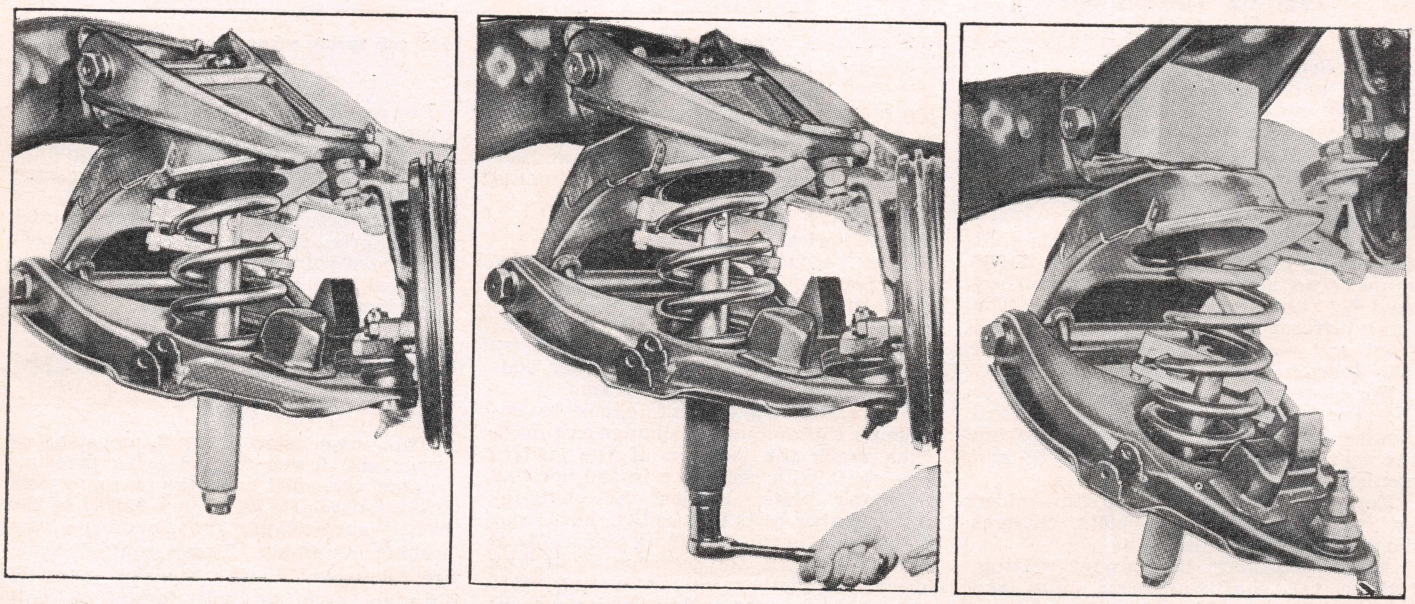

Fig. 4 Removing or installing front coil spring. 1963

TORSION BAR SUSPENSION

1960-62

All trucks *except Forward Control models* have independent torsion bar front suspension with ball joints connecting each steering knuckle to a set of upper and lower control arms. Two basic suspensions which are adapted for various load ratings are used; one for Series 10, 20, 30 and 40 trucks and one for Series 50, 60, 70 and 80. The suspensions, Fig. 6, include the frame front crossmember, control arms and shafts, ball joints, torsion bars, steering knuckles and attaching parts.

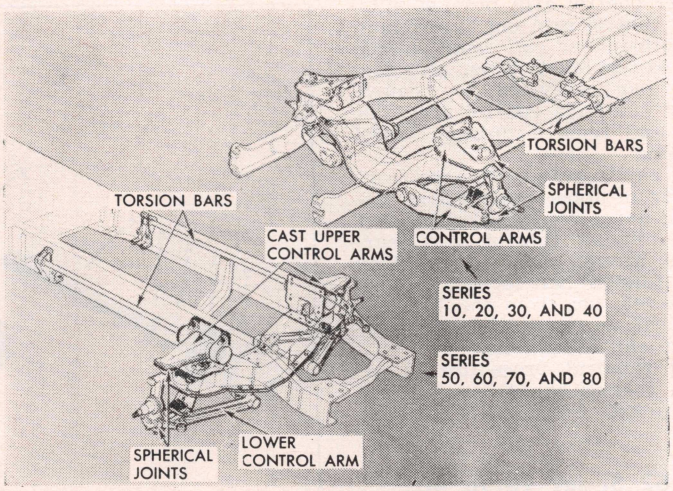

Fig. 6 Torsion bar front suspension. 1960-62

10 Through 40 Series

The front end of each torsion bar is supported in a steel tube in the lower control arm and firmly held in position in the hexagon section of the tube. The rear of the torsion bar is supported in an adjustable anchor connected to a special crossmember. The upper end of each shock absorber is bolted to a frame bracket and the lower end is bolted to the lower control arm.

50 Through 80 Series

The front end of each torsion bar is supported in the upper control arm and firmly held in the hexagon section of the arm. The rear of the torsion bar is supported in a bracket attached to the outside of the frame side rail and firmly held by the hexagon portion of the bracket. The bar is located and locked in the bracket by a pin which passes through a hole in the bracket and a notch in the torsion bar rear hex.

Torsion Bars

Torsion bars are furnished as right and left hand parts and must be installed on correct side of vehicle so proper vehicle height can be obtained. New bars may be identified by colored bands located about 6″ from rear hex. One band indicates right hand bar and two bands indicates left hand bar. *Use caution in handling torsion bars to prevent nicks or scratches. If bars are nicked or scratched, stress concentrations and corrosion can lead to failure of the bar in operation.*

1960 Series 10 to 40

To remove a torsion bar, remove upper control arm bumper from control arm and disconnect shock absorber. Raise vehicle and support frame so control arms are at full rebound position. Back off adjusting bolt to unwind the torsion bar, Fig. 7, until bolt and lower spacer can be slipped out of anchor arm. Then pull anchor arm rearward off bar.

When installing the bar, the spacer and nut must be positioned so rocker groove of spacer and ridge of nut (long sides) are parallel to crossmember. Position the arm to the bar so the rear face of the arm is flush with the rear end of the bar within (plus or minus) $\frac{3}{32}$″ to prevent failure of the bar due to stress risers developed if front corners of hex on arm rides on ridges of hex on bar.

Check the position of the spacer and nut to be sure the rocker surfaces are parallel with the crossmember. Then tighten torsion bar adjusting bolt on each side until vehicle assumes nominal curb height.

1960-62 Series 50 to 80

1. Remove rebound bumper and remove shock absorber bolt from lower ball stud support.
2. Remove weight from suspension by jacking frame until upper control arm contacts crossmember.
3. Drive lock pin out of torsion bar rear bracket.
4. Pull torsion bar to rear and out of control arm hex and bracket hex.
5. Pull torsion bar out through rear bracket. *On short wheelbase models or other models with special equipment which limits clearance for rearward removal of torsion bar, the bar may be removed in either of the following ways:*
   a. Pull bar forward to remove rear hex from rear bracket. Loosen

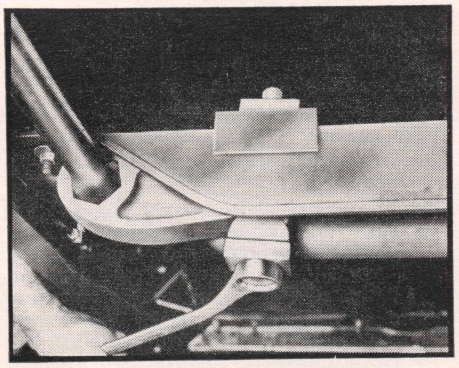

Fig. 7 Unloading torsion bar. 1960-62 Series 10 to 40

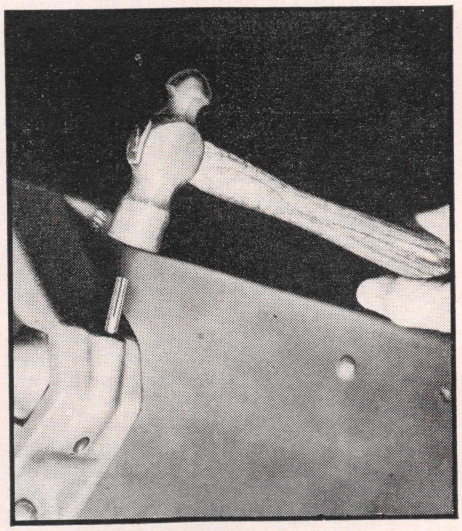

Fig. 8 Installing torsion bar lock pin. 1960-62 Series 50 to 80

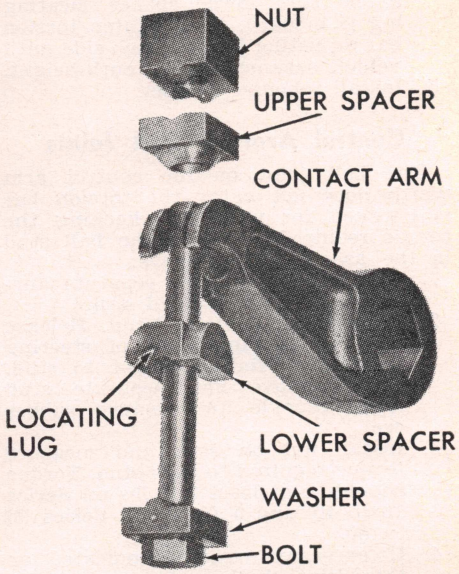

Fig. 9 Torsion bar anchor bolt. 1961-62 Series 10 thru 40

upper control arm bracket nuts. Pull control arm out far enough so torsion bar can clear outside of rear bracket. Then pull torsion bar rearward to remove front hex from control arm. Tilt bar and remove through wheel opening.

b. Pull bar to rear to remove front hex from upper control arm. Remove upper control arm bracket bolts. Swing control arm rearward around ball joint. Then pull torsion bar forward to remove rear hex from rear bracket. Tilt bar downward and out forward end of vehicle.

6. Reverse removal procedure to install the torsion bar. Drive lock pin into bracket flush with surface, Fig. 8.

1961-62 Series 10 to 40

The torsion bar remains practically the same as 1960 except that the locating dimple in the front socket has been removed, thus changing the installation procedure as follows:

1. Prior to installation of rebound bumper, and with front suspension in full rebound position, install front hex of torsion bar into lower control arm socket and slide forward to position rear of bar at center of crossmember.
2. Locate upper spacer and nut, Fig. 9, on top of crossmember. Install special washer and lower spacer on bolt, insert bolt up through crossmember and upper spacer and start into nut. *Spacer and nut must be positioned so rocker groove of spacer and ridge of nut are parallel to crossmember, with locating lug on lower spacer inboard.*
3. Assemble torsion bar arm to hex of torsion bar so spacer and bolt can be slipped into arm when bolt engages about half the threads of nut. Position arm to bar so rear face of arm is flush with rear end of bar within (plus or minus) $\frac{3}{32}$".
4. Check position of spacer and nut to be sure lower spacer locating lug is inboard, then tighten torsion bar adjusting bolt on each side until vehicle assumes normal curb height.
5. Install rebound bumper.

Control Arms & Ball Joints

The ball joint on the control arm which *does not* carry the torsion bar is checked for wear by checking the torque required to rotate the ball stud in the assembly as follows:

1. Support frame and separate torsion bar from control arm.
2. Loosen ball joint stud nut. Release stud by rapping sides of steering knuckle at flats adjacent to stud. Then remove nut, separate stud from knuckle and remove rubber seal.
3. Install nut on stud and measure torque required to turn stud. Torque should be at least 2 ft lbs on Series 10 to 40, and 5 ft lbs on Series 50 to 80.
4. If excessive wear is indicated on this joint, both upper and lower joints should be replaced. If a tight joint is suspected, maximum allowable torque, with joint well lubricated, should be 15 ft lbs on Series 10 to 40, and 20 ft lbs on Series 50 to 80.

If inspection of ball joint as outlined above indicates that joint is satisfactory, inspect the joint on the control arm which *does* carry the torsion bar as follows:

1. With ball joints, control arms and steering knuckles completely installed, support vehicle weight on wheels or wheel hubs.
2. Using outside micrometer or caliper, measure distance between end of lube fitting and end of ball stud and record the dimension. Repeat at ball joint at opposite side of vehicle.
3. On series 10 to 40, support vehicle weight at outer end of each lower control arm so wheels or wheel hubs are free. On Series 50 to 80, support vehicle at center of crossmember to let wheels hang.
4. If the difference in dimensions on either side is greater than $\frac{3}{32}$", the joint is excessively worn and the joint at both sides of the vehicle should be replaced.
5. If the above measurements do not indicate any reason for ball joint replacement, test the torque tightness of the stud nut at each side of the vehicle as follows:
   a. Examine for evidence of looseness of stud in knuckle.
   b. If no evidence of looseness, remove cotter pin and, with prick punch or equivalent, mark nut and stud to identify relative location.
   c. Back off stud nut. Then retighten to original position and observe torque reading. If less than 45 ft lbs, stud may have been loose in steering knuckle and replacement of joint is recommended.

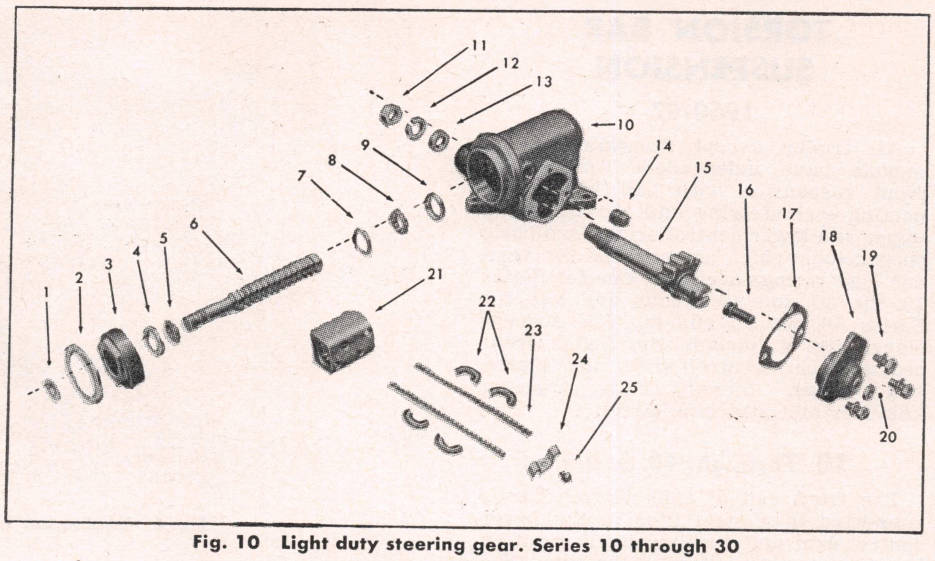

Fig. 10 Light duty steering gear. Series 10 through 30

1. Oil Seal
2. Adjuster Lock Nut
3. Adjuster
4. Wormshaft Bearing Cup
5. Wormshaft Upper Bearing
6. Wormshaft
7. Bearing Retainer
8. Wormshaft Lower Bearing
9. Wormshaft Bearing Cup
10. Steering Gear Housing
11. Pitman Arm Retaining Bolt
12. Lock Washer
13. Pitman Shaft Seal
14. Filler Plug
15. Sector and Shaft
16. Lash Adjuster and Shim
17. Side Cover Gasket
18. Side Cover
19. Side Cover Bolts
20. Lash Adjuster Lock Nut
21. Ball Nut
22. Ball Guide
23. Balls
24. Ball Guide Clamp
25. Ball Guide Clamp Screw

STEERING GEAR

The steering gear, Figs. 10 and 11, is the recirculating ball type. The principal working arrangement consists of a "ball nut" connected to the steering worm and in mesh with the sector gear. Precision finished helical grooves inside the ball nut match helical grooves in the worm, and it is in these grooves that ball bearings roll around as the steering wheel is turned.

There are two complete ball circuits within the ball nut. To keep the balls from running out of the end of either circuit, the nut is equipped with two tubular ball guides, each of which deflects the balls away from their helical path at one end of their travel, guides them diagonally across the back of the nut and returns them to their helical path between the ball nut and the worm at the other end of their travel.

The balls constitute a thread between the worm and ball nut so that when the worm is turned, the nut moves along the worm as with an ordinary screw thread.

STEERING GEAR ADJUSTMENTS

There are only two adjustments to be made on this gear and the following procedure must be made step-by-step in the order given.

1. Disconnect drag link from pitman arm.
2. Loosen the sector shaft lock nut and turn the adjusting screw a few turns counter-clockwise. This removes from the worm bearings the load imposed by close meshing of rack and sector teeth. Turn steering gear gently in one direction until stopped by gear, then turn it back one turn.
3. With a spring scale, measure the

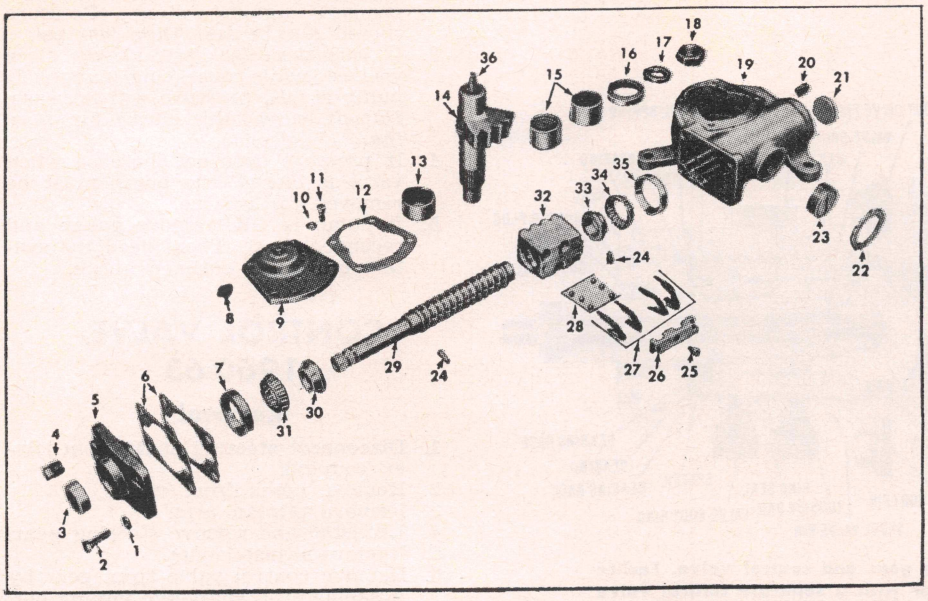

Fig. 11 Heavy duty steering gear. Series 50 through 80

1. Lock Washer
2. Top Cover-to-Housing
3. Oil Seal
4. Filler Plug
5. Top Cover
6. Shims
7. Bearing Cup—Worm Thrust Upper
8. Lash Adjuster Lock Nut
9. Side Cover
0. Lock Washer
11. Side Cover to Housing Bolt
12. Gasket
13. Needle Bearing—Side Cover
14. Sector Shaft—Gear Assembly
15. Needle Bearings—Sector Shaft
16. Oil Seal
17. Lock Washer—Pitman Arm
18. Pitman Arm Nut
19. Steering Gear Housing
20. Drain Plug
21. Expansion Plug
22. Lock Nut—Back-up Adjuster
23. Back-up Adjuster
24. Ball Nut Stops
25. Screw and Washer—Ball Guide Clamp
26. Ball Guide Clamp
27. Ball Return Guides
28. Balls
29. Steering Worm Shaft
30. Bearing Cone—Worm Thrust Upper
31. Worm Thrust Bearing—Upper
32. Ball Nut
33. Bearing Cone—Worm Thrust Lower
34. Worm Thrust Bearing—Lower
35. Bearing Cup—Worm Thrust Lower
36. Lash Adjuster

pull at the rim of the wheel which is required to keep the wheel in motion. This should be between ½ to ¾ lbs on light duty gears and 1½ to 2 lbs on heavy duty gears. If the pull necessary to move the wheel does not lie between these limits, adjustment of worm bearings is necessary.

4. To adjust worm bearings, loosen the worm shaft lock nut and turn the worm bearing thrust screw, until there is no perceptible end play in worm. Check pull at wheel rim, readjusting if necessary to obtain proper pull. Tighten lock nut and recheck pull after lock nut is tightened.
5. After proper adjustment of worm is obtained and all mounting bolts securely tightened, adjust cross shaft lash adjuster as follows:
6. First turn steering wheel gently from one stop to the other, carefully counting total number of turns. Then turn wheel back half way to center position. Mark wheel at top or bottom center with a piece of tape.
7. Turn lash adjuster clockwise to take out all lash in gear teeth and tighten lock nut.
8. Check pull at wheel rim with spring scale as before, taking highest reading on scale as wheel is turned through center position. This should be between ⅞ to 1½ lbs on light duty models and 2¾ to 3¼ lbs on heavy duty gears.
9. Readjust if necessary to obtain proper pull. Tighten lock nut and recheck pull as it must lie between 2 and 2½ lbs. after lock nut is tightened.
10. Connect drag link to pitman arm.

STEERING GEAR, REPLACE

1963

1. Loosen bolt attaching lower end of shaft to steering gear.
2. Disconnect pitman arm from gear.
3. Unfasten steering gear from frame and remove from vehicle.

1960-62

1. Loosen bolt attaching lower end of intermediate shaft to steering gear.
2. Use a suitable puller to remove the pitman arm from the steering gear.
3. Remove all steering gear-to-frame mounting bolts and remove gear from vehicle.
4. To install, first be sure that steering wheel is in straight ahead position and that the steering gear is centered. With the gear in centered, the mark on the worm shaft will be in the 12 o'clock position on Series 10 to 40, and in the 9 o'clock position on Series 50 to 80.
5. Position steering gear in place on frame. At the same time slide the worm shaft into the flexible or universal coupling. Check that the mark on the intermediate shaft lines up with the mark on the steering gear worm shaft.
6. Tighten mounting bolts and bolt at coupling or universal joint.

1952-59 Conventional

1. Disconnect horn wire and remove wire retainer from steering mast jacket.
2. Remove horn button and steering wheel.
3. Remove seat cushion except on Forward Control models.
4. Unfasten mast jacket from instrument panel.
5. On ½ and ¾ ton, disconnect gear shift upper control shaft support from mast jacket. Separate upper control shaft from lower shaft by removing lower bolt from shaft clamp.
6. Unfasten and slide toe board grommet and seal up on mast jacket and remove toe board plate.
7. On Forward Control models, hoist front end of vehicle and remove mast jacket opening cover located underneath vehicle.
8. On ½ and ¾ ton, unfasten gearshift control housing from mast jacket.
9. Unfasten gear housing from frame.
10. On Forward Control models, gear can now be moved forward, down and out of vehicle.
11. On all other models, unfasten and move left fender skirt out of the way.
12. Slide steering gear slightly upward toward toe board, then rotate until attaching flange is up. Raise slightly and lift gear out over fender.
13. Reverse the foregoing procedure to install the gear.

1952-59 Cab-Over-Engine

1. Remove steering wheel and disconnect dash mounting bracket.
2. Remove left hand floor pan and steering column grommet.
3. Disconnect horn wire.
4. Remove signal switch bowl.
5. Remove fender skirt.
6. Remove pitman arm.
7. Unfasten gear from frame.
8. Move gear back to clear radiator grille. Then drop gear down through fender skirt opening, pulling steering column through opening in floor.
9. Reverse above procedure to install gear.

When checking fluid level, be sure that bubbles are not present in the fluid. If bubbles are found, bleed the system as outlined further on.

Another cause of noise in the pump can be a sticky valve which will produce a buzzing sound. This can be determined by checking for excessive pump pressure.

Obstructions in the hydraulic system will also cause a noise. For instance, a slight burr on the edge of one of the valve spool lands or a hose restriction will cause a noise on turns. Removal of the burr with a fine stone or replacement of the hose will correct the condition.

If belt noise, possibly accompanied by a knock or steering wheel oscillation, is present on extreme turns, it is reasonable to assume that improper pump belt tension is the cause.

POWER STEERING

The power steering, Fig. 12, combines the standard recirculating ball type steering gear with hydraulic booster equipment. The 1960-63 system has the control valve located directly on the steering gear, thus simplifying power line arrangement and improving steering response. Earlier models had the control valve incorporated with the steering

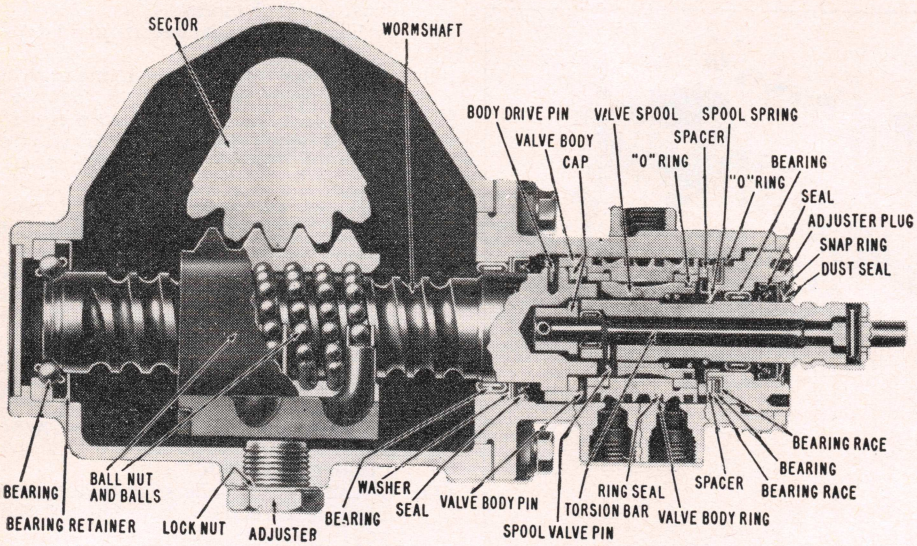

Fig. 12 The 1960-63 power steering gear and control valve. Earlier models use the standard steering gear with a separate control valve

linkage. The power cylinder, on all models, is also incorporated in the steering linkage.

Checking for Leaks

If an oil loss is indicated in the power steering system, first wipe all units dry. This includes the pump, hoses, power cylinder and control valve. Then fill the reservoir, start the engine, operate the steering gear and observe where the leak occurs.

A possible place for leakage would be at the pump, involving either the reservoir-to-pump body seal or the pump drive shaft oil seal. In the case of pump leakage the repair is fairly simple requiring very little time to replace the seals. Other leaks may require the removal of the unit from the vehicle and more involved service.

Improperly installed seals is a major cause of leaks. Damage to "O" ring seals will cause leaks if the housings have sharp edges which cut the "O" rings. Sharp edges should be removed with a fine stone and new seals installed.

Checking Noise

To determine whether or not the steering unit is at fault, disconnect the pump drive belt and operate the vehicle. If the noise is no longer present the steering gear is eliminated and the next check should be the power unit.

It is well to bear in mind that a power steering complaint should not be diagnosed without first checking fluid level and drive belt tension. Either may cause noises and malfunctions which could conceivably be blamed on the steering unit.

Hard Steering

Dirt in the system has been found to be a cause of hard steering as greater effort is required to reposition the spool and bring the power steering into operation. The repair will be a complete cleaning of the hydraulic system. A pump relief valve stuck in the open position can be the cause of hard steering as there will be zero pump pressure.

Fluid Level

Turn wheels to full left turn position before checking fluid level. Fill reservoir to within ½" to 1" of top of reservoir. If the reservoir is full at a position other than full left turn, the reservoir will overflow through the vent during turn operations.

Bleeding Hydraulic System

After a pump or control valve has been installed or a disconnected oil line has been reconnected, the air that entered the hydraulic system must be bled out, otherwise noisy and unsatisfactory operation will result.

1. Fill the reservoir to the proper level and let oil remain undisturbed for about two minutes.
2. Raise front end of vehicle so wheels are free.
3. Start engine and run at idle for two minutes.
4. Turn wheels right and left, lightly contacting the stops.
5. Lower vehicle and turn wheels right and left on the ground.
6. Recheck for leaks.
7. Recheck oil level and refill as required.

Pump Belt Tension

1. Loosen pump-to-mounting bracket attaching screws.
2. With a suitable tool, pull pump outward until tension on belt is such that a 15 lb load applied midway between the pump pulley and fan pulley will result in a ½ to ¾" deflection of the pump belt.
3. Tighten attaching screws.

Checking Pump Pressure

1. Disconnect pressure line at oil pump and attach a 1000 psi pressure gauge.
2. With engine warm and idling, open the gauge valve. Turn wheels (on ground) against stops. Pressure should not be less than 900 psi.
3. If less than 900 psi, slowly close valve while observing gauge. If pump is OK, pressure will increase. *Do not leave valve closed for more than 15 seconds.*
4. If pressure does not increase when valve is closed, the pump must be removed for service.
5. If pump is OK, remove gauge and reconnect hose. Then bleed the system of air as outlined above.

CONTROL VALVE, 1960-63

Removal

1. Disconnect steering shaft from lower coupling.
2. Remove hoses from valve.
3. Remove pitman arm.
4. Unfasten and remove steering gear.
5. Remove adjuster plug.
6. Remove control valve from gear by grasping stub shaft and pulling out.

Disassembly

NOTE—It is very uncommon to have to make any service repairs to the valve assembly, with the possible exception of replacing the valve spool dampener O-ring. Do not disassemble the valve unless absolutely necessary since this may result in a damaged assembly. If the valve spool dampener O-ring requires replacement, remove the valve spool only. Replace the O-ring and reinstall the spool immediately. Do not disassemble further.

1. Remove spool spring by prying on small coil, using a small screwdriver. *Do not pry against valve body as this may result in a sticky valve.* Work spring onto bearing diameter of the stub shaft. Slide spring off stub shaft.
2. Remove valve spool with extreme care. *The diametral clearance between valve body and spool may be as low as .0004". The slightest cocking of the spool may jam it in the valve body. To remove the spool, hold the valve assembly in both hands with the stub shaft pointing downward. Push lightly on the valve spool with a pencil or small brass rod by inserting it through the openings in the valve cap until the spool is far enough out of the valve so that it may be grasped by the hand, Fig. 13. Withdraw the spool with a steady oscillating pull to prevent jamming, Fig. 14. If slight sticking occurs, make a gentle attempt to reverse the withdrawal procedure. If this does not free the spool, it has become cocked in the valve body bore. Do not attempt to force the spool in or out if this occurs. Rather, continue to disassemble the valve and return to the spool as described later.*
3. Remove stub shaft, torsion bar, and valve cap by holding valve assembly in both hands as before only with thumbs on the valve body. Tap torsion bar lightly against workbench. This will dislodge the cap from the valve body-to-cap pin. The stub shaft and valve cap assembly can

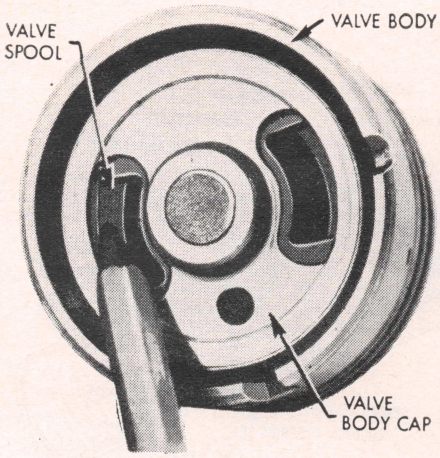

Fig. 13 Separating valve spool from valve body. 1960-63

now be removed from the valve body.

4. If the valve spool has become cocked as in Step 2, it can now be freed. By visual inspection on a flat surface, it can be determined in which direction the spool is cocked. A very few light taps with a soft-faced mallet may align the spool in the bore and free it. *Do not tap the spool with anything metallic. If spool can be rotated, it can be removed.*
5. Remove O-ring dampener seal from spool and discard.
6. Carefully cut valve rings and ring back-up seals. Remove and discard, providing the rings show evidence of excessive wear.

Inspection

1. If valve leaks externally around torsion bar, the entire valve assembly should be replaced.
2. Check the pin in the valve body which engages the cap. If it is badly worn, cracked or broken, the entire valve assembly should be replaced.
3. Check the worm pin groove in the valve body (smaller of two). If worn badly, the valve assembly should be replaced.
4. Check the spool drive pin in the stub shaft. If badly worn, the valve assembly should be replaced.

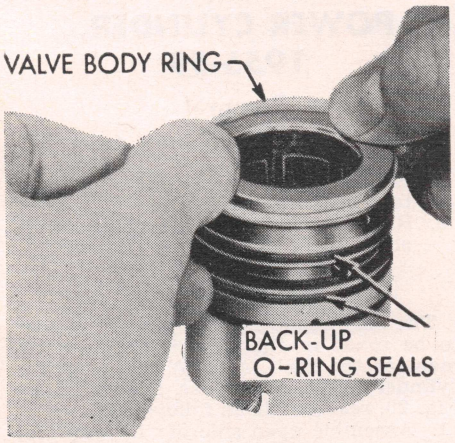

Fig. 15 Installing valve body rings. 1960-63

5. Examine the spool O.D. for nicks, burrs or excessive wear areas. If any are found the valve assembly should be replaced. A slight polish is normal on the valve surfaces.
6. Examine the valve body for nicks, burrs or bad wear spots. If any are found, replace the valve assembly. As on the spool, a slight polish is normal on the valving surfaces.
7. Check the fit of the spool in the valve body without the spool dampener O-ring seal. The spool should rotate smoothly without binding or catching. If either occurs, the valve assembly should be replaced. A small burr on the spool or in the valve body can usually be removed by use of a very fine hone.
8. Measure the length of the spool spring. The free length should be approximately .79″. If it measures .76″ or less, the spring should be replaced as it has taken a permanent set.

Reassembly

NOTE—As valve is being assembled, lubricate parts with Automatic Transmission fluid.

1. Assemble four valve ring and four back-up O-ring seals on ring grooves on valve body. Do not allow seals to become twisted. Assemble valve rings in ring grooves over O-ring seals by carefully slipping rings over valve body, Fig. 15. The rings may appear loose or twisted in the grooves but the heat of the oil during operation will cause them to straighten.
2. Install new valve spool dampener O-ring seal in valve spool groove. Do not allow seal to twist in groove.
3. Assemble stub shaft in valve body by aligning groove in valve cap with pin in valve body, Fig. 16. Tap lightly on cap with soft-faced mallet until cap is against shoulder in valve body with valve body pin in cap groove. *Make sure groove and pin are in line before tapping on cap. Hold these parts together during rest of assembly.*
4. Slide valve spool over stub shaft with notch toward valve body. Align notch with spool drive pin in stub shaft and carefully engage spool in valve body bore. *Because the clearance between the spool and valve body is very small, extreme care must be taken when assembling these parts. Push the spool evenly and slowly with a slight oscillating motion until the spool reaches the drive pin. Rotate the spool slowly with pressure until notch engages the pin. Before pushing the spool in completely, make sure the dampener O-ring is evenly distributed in the spool groove. Slowly push spool in completely, with extreme care taken not to cut or pinch the O-ring seal.*
5. Slide spool spring over seal protector and work spring down until it is seated in undercut part of stub shaft. Take care not to scratch or mar the sealing surfaces of the stub shaft.
6. If during assembly of the valve the stub shaft and cap assembly is allowed to slip out of engagement with the valve body pin, the spool will be permitted to enter the valve

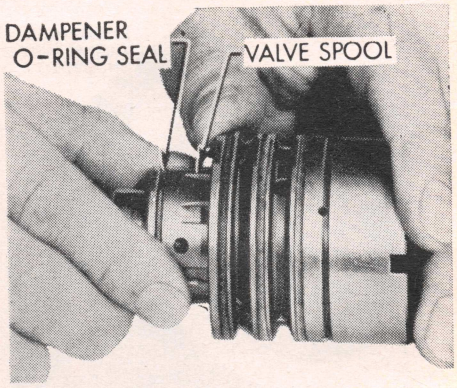

Fig. 14 Removing valve spool. 1960-63

body too far. The dampener O-ring seal will expand into the valve body oil grooves, preventing withdrawal of the spool. Attempt to withdraw the spool with a light pull and much rotary motion. If this does not free the spool after several tries, make sure spool is free to rotate. Place valve body on flat surface (notched end up) and tap spool with a wooden or plastic rod until the O-ring seal is cut and the spool can be removed. Replace the dampener O-ring seal and proceed with assembly as before.

Installation

1. Align valve body drive pin on worm with the narrow pin slot on the valve body.
2. Insert valve in valve housing. *Do not push against stub shaft as it may cause stub shaft and cap to push out of valve body, allowing spool seal to slip in valve body oil grooves as already described. The valve should be pushed in by pressing against the valve body with the finger tips. Be sure the valve is properly seated before adjusting the adjuster plug. The return port in the valve housing should be fully visible at this time, Fig. 17.*
3. Install adjuster plug assembly. Check valve assembly drag with an

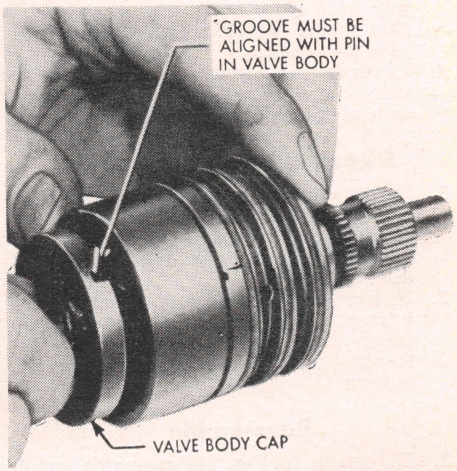

Fig. 16 Assembling stub shaft, torsion bar and cap in valve body. 1960-63

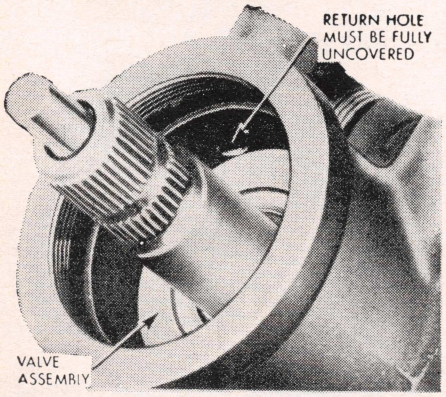

Fig. 17 Control valve properly installed in housing. 1960-63

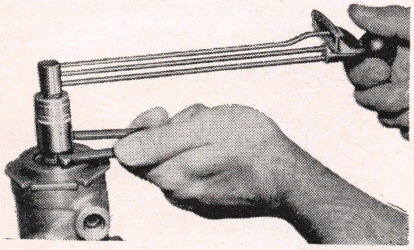

Fig. 18 Adjusting adjuster plug. 1960-63

inch-pound torque wrench. Then adjust the adjuster plug, Fig. 18, until the preload is 1 to 3 inch lbs in excess of valve assembly drag.

CONTROL VALVE, 1955-59

Remove and Replace

1. Disconnect hydraulic lines from the valve and drain hoses.
2. Remove link-to-steering knuckle third arm nut and ball stud-to-pitman arm nut.
3. Disengage ball stud from pitman arm by tapping on lower end of arm to squeeze tapered ball stud from hole in pitman arm. *Do not pry ball stud from pitman arm as this would deform the sleeves and jam the valve.*
4. Reverse the removal procedure to install the valve and bleed the system of all air as outlined previously.

Disassemble and Inspect

1. Disassemble as suggested by Fig. 19. *Special care should be exercised to protect the spool edges and the bore of the valve housing from damage.*
2. Inspect all parts for scratches, burrs, distortion, and evidence of wear.
3. Replace all seals, gaskets and covers.

Reassemble

1. Referring to Fig. 19, assemble spool into valve housing. On L.C.F. models, install spool with small diameter next to sliding sleeve end. On conventional models, install spool with large diameter end next to sliding sleeve end.
2. Assemble large and small bore "U" cup seals over large and small projection ends of spool with lips of seals facing each other.
3. Assemble bushing plates on their respective ends of spool.
4. Insert spool bolt through screw stop and assemble spacer on bolt.
5. Assemble lock pin in hole of screw stop and through slot in bolt head to secure bolt to screw stop.
6. Place inner sleeve in outer sleeve and flange. Then assemble ball seat, ball stud, ball seat, spring, spring seat in sliding sleeve.
7. Assemble screw stop with bolt to sleeve assembly by threading screw stop into inner sleeve and tighten securely.
8. Assemble bushing plate over bolt and on shoulder of outer sleeve flange.
9. Insert spool bolt through hole in spool and assemble lock nut. Draw up nut tight and back off less than ¼ turn until spool can be rotated with a minimum of end play.
10. Position drag link flange on valve housing so that ball stud is on side opposite valve ports. Align holes and assemble three bolts and tighten securely.
11. Place valve in vise and check ball stud travel by pushing on stud. Stud should have ⅛" travel along drag link axis. This travel is necessary to allow valve to open all the way.

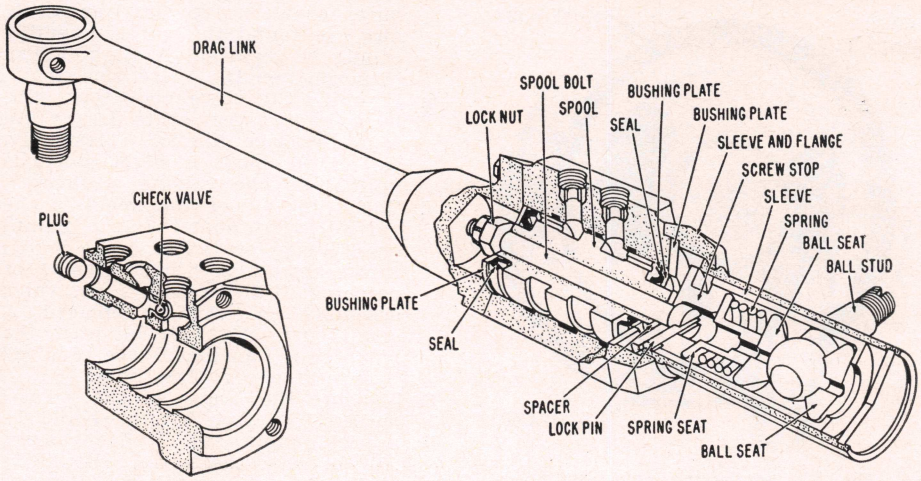

Fig. 19 Control valve. 1955-59

POWER CYLINDER, 1960-63

Removal

1. Remove hydraulic lines from cylinder.
2. Remove cotter pin and loosen adjuster screw securing end of cylinder to front bracket enough to permit cylinder to be removed.
3. Repeat procedure to remove opposite end of cylinder from rod bracket.
4. Loosen clamp bolt and unscrew ball socket connection from push rod end of cylinder.

Repairs

The only repair to be made to the power cylinder in the field is the replacement of the seal parts. With cylinder disassembled, assemble the seal parts as follows:

1. Assemble open side of "U" cup seal over rod and into the bearing cavity, guide assembly, dust seal (wide side away from seal cavity), and wiper assembly.
2. Slide parts in place on rod and lock in place with snap ring.

Installation

1. With tie rod ball stud in place in socket, screw plug in tight, then back off to nearest hole before installing cotter pin.
2. Turn steering wheel from stop to stop and check that the cylinder does not bottom and prevent stops from hitting axle.
3. Connect and tighten hydraulic hoses. Make certain hoses are not kinked and will not bind when vehicle is turned.
4. Check for leaks and bleed system as outlined previously.

POWER CYLINDER, 1955-59

Removal

1. Remove hydraulic lines from cylinder.
2. Remove bolt securing end of cylinder to front bracket.
3. Remove U-clamps attaching opposite end of cylinder to tie rod.

Repairs

The only repairs to the power cylinder to be made in the field is the replacement of the seal parts. With the power cylinder disassembled as suggested by Fig. 20, reassemble as follows:

1. Assemble open side of "U" cup seal over rod and into bearing cavity, seal back-up washer, dust seal (with

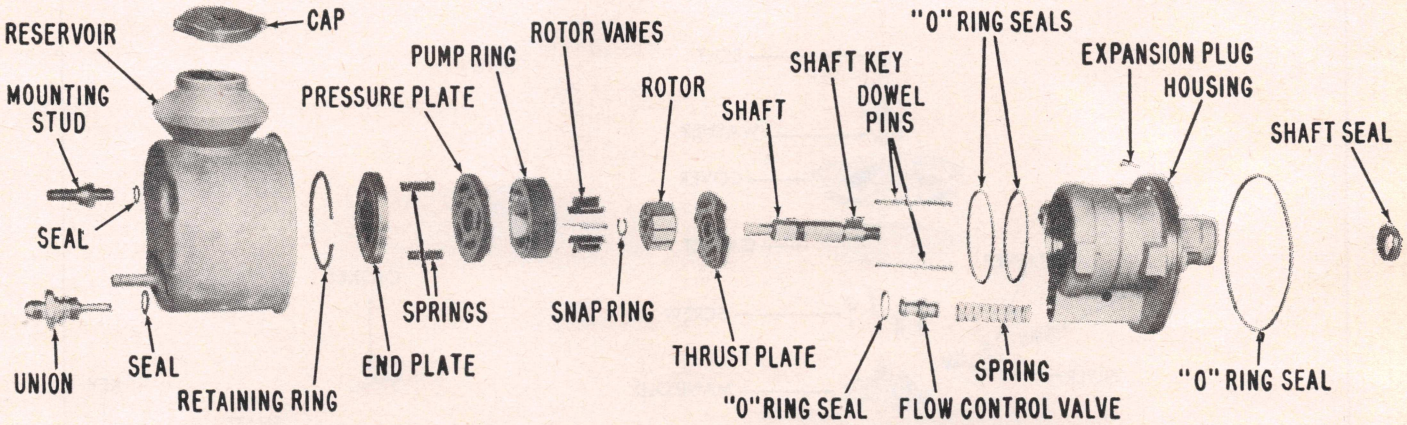

Fig. 21 Power steering pump. 1960-63

side away from seal cavity), and scraper washer.

2. Slide parts in place on rod and lock in place with snap ring.

Installation

1. Install U-clamps on tie rod and through bracket on end of power cylinder.
2. The distance from the centerline of the furthest outboard U-clamp to the centerline of the ball stud on the opposite side should be:

Series	Distance
3100, 3200	18⅞″
3600, 3800	19¾″
4000	21¾″
5000 (1955-57)	22¼″
5000 (1958-59)	① 21½″
5000 (1958-59)	② 14 27/32″
6000	21¾″
7 to 10000 (1955-57)	13⅜″
7 to 10000 (1958-59)	13⅛″

① With two attaching bolts.
② With three attaching bolts.

3. After adjusting to proper distance, turn steering wheel from stop to stop and check that cylinder does not bottom and prevent stops from hitting axle.
4. Attach opposite end to axle bracket, connect hoses, check for leaks and bleed system.

POWER PUMP, 1960-63

1. Disassemble the pump as suggested by Fig. 21.
2. To assemble, insert shaft into housing, being sure shaft seats by pressing with thumb on splined end.
3. Install thrust plate on dowel pins with ported face to rear of pump housing.
4. Install pump ring on dowel pins with direction of rotation arrow to rear of pump housing. *Arrow on outer edge of pump ring points in direction of rotation.*
5. Install rotor over splined end of pump shaft and install snap ring. *Assemble rotor with countersunk side toward shaft.*
6. Install vanes in rotor slots with radius edge toward outside, Fig. 22.
7. Lubricate outside diameter and chamfer of pressure plate with vaseline to insure against damaging O-ring and install on dowel pins with ported face toward pump ring. Using a 2¾″ diameter tube to apply pressure to outer edge only, seat pressure plate with use of an arbor press. *Never press or hammer on center of pressure plate as this will cause permanent distortion with resulting pump failure.*
8. Install pressure plate springs, one over each dowel pin.
9. Lubricate outside diameter and chamfer of end plate with vaseline to insure against damaging O-ring and install in housing using an arbor press.

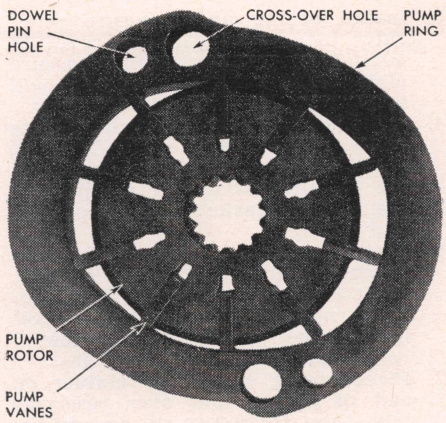

Fig. 22 Proper valve installation. 1960-63 pump

10. Install end plate retaining ring while pump is in arbor press. Be sure it is completely seated in groove of housing.
11. Install flow control spring.
12. Install flow control plunger, being sure hex head screw goes into bore first.
13. Install reservoir, studs, seals, union, union seal and drive shaft key. Support shaft on opposite side of key when installing key.
14. Install pump on vehicle and bleed system of air.

POWER PUMP, 1958-59

1. Disassemble pump as suggested by Fig. 23.
2. To assemble the pump, install new discharge union seal and assemble discharge union to lower end of pump cover. Tighten to 10-20 ft lbs.
3. Lubricate shaft seal and end of a pusher tool. Then press seal into seal cavity of pump body until tool bottoms. *Seal should be installed with part numbers on metal face of seal toward outside of pump.*
4. Install dowel pins to pump body, Fig. 24.
5. Install new O-ring to pump body groove.
6. Install Woodruff Key to shaft.
7. Install shaft and key to pump body, being careful not to damage shaft seal.

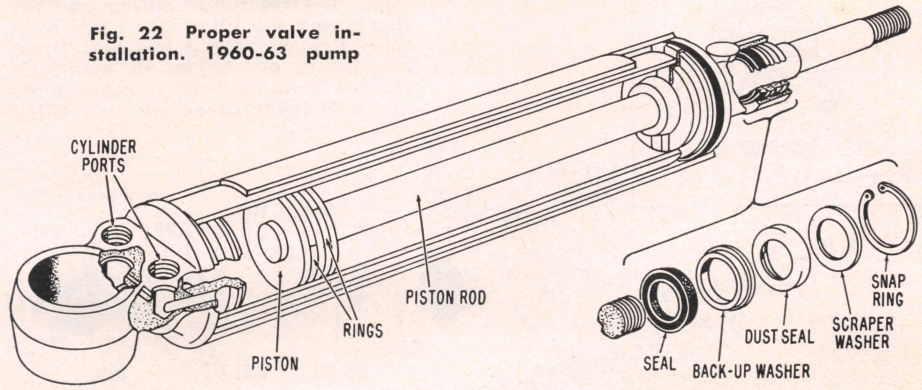

Fig. 20 Power cylinder. 1955-59

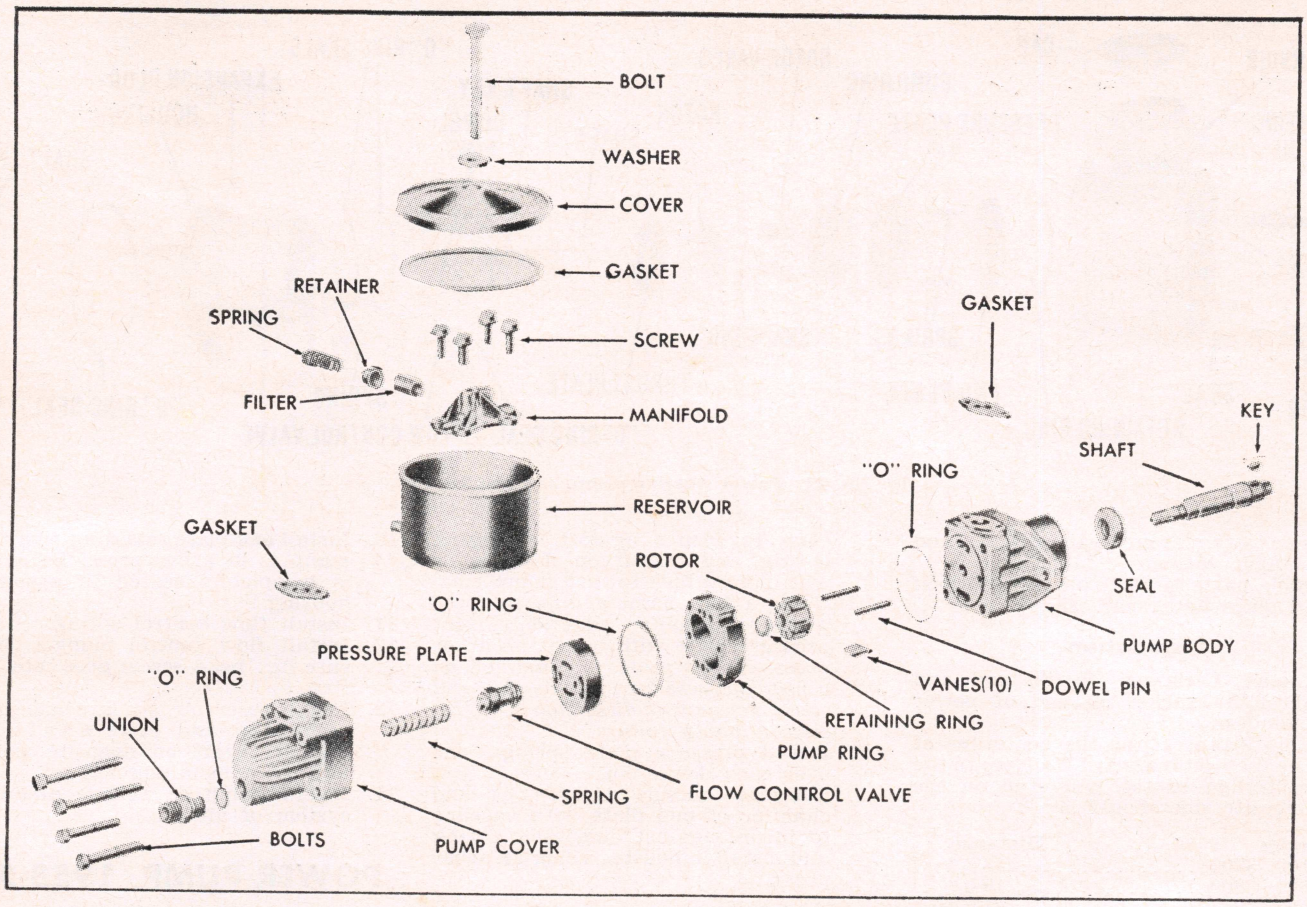

Fig. 23 Power steering pump. 1958-59

8. Install pump ring to dowel pins, with arrow on outside of pump ring pointing as shown in Fig. 25.
9. Install rotor over splined end of drive shaft. Rotor must be assembled with side having countersunk end of splines toward pump body. Install retainer ring to groove at end of drive shaft, Fig. 25.
10. Assemble vanes to rotor, Fig. 25.
11. Install pressure plate to dowel pins and pump ring. The ½" bore in center of plate must locate over drive shaft.
12. Install O-ring in counterbore of pump cover.
13. Install spring and pressure relief valve to cover and install cover to pump body, pump ring and pressure plate. *Capscrew end of valve should be inserted into cover bore first.*
14. Install cover-to-body attaching bolts and tighten alternately to 25-30 ft lbs. Note that the two long bolts are installed at top of pump.
15. Install new gaskets on pump body and cover.
16. Position reservoir over gaskets on pump and install spring over inlet line tube inside reservoir. Then position manifold over attaching bolt holes on bottom of reservoir. Install bolts and torque to 8-10 ft lbs.
17. Place spring and filter retainer on end of spring and over reservoir inlet tube. Compress spring and retainer and slip filter into place over tube. Release spring and seat filter in shallow depression in manifold. *Do not install reservoir cover until pump is installed on car and filled*

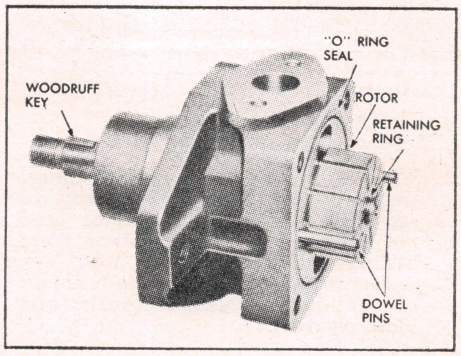

Fig. 24 View of pump body with shaft and rotor. 1958-59

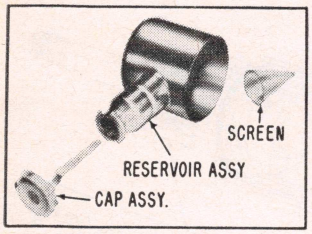

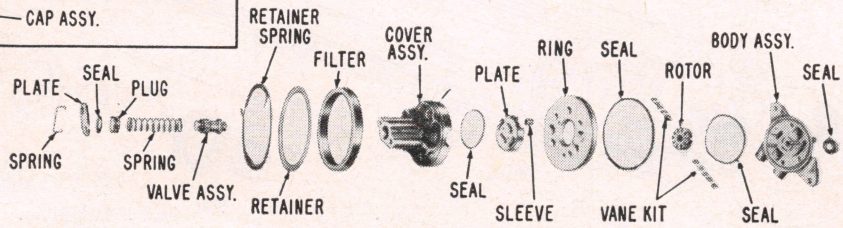

Fig. 26 Power steering pump. 1955-57

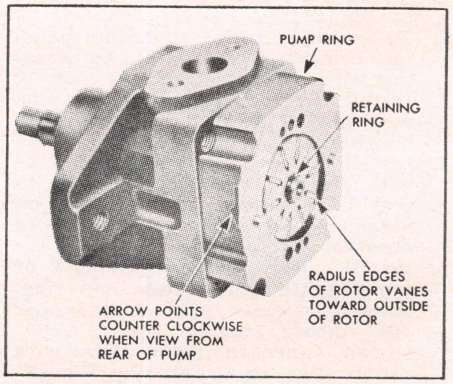

Fig. 25 Pump ring and rotor installed. 1958-59

with fluid. Then install new gasket and torque cover bolt to 7-9 ft lbs.

18. Install pump on vehicle and bleed system of air.

POWER PUMP, 1955-57

1. Disassemble pump as suggested by Fig. 26.
2. To assemble, apply Lubriplate and install new O-rings in pump cover, on cam ring, and in pump body.
3. Install rotor and vanes on pump body with beveled edge of vanes against cam ring inner diameter.
4. Install alignment sleeve in cam ring and install cam ring on pump body. *The wider edge of cam ring is correct side to pump body. Be certain to align bolt holes in cam ring with bolt holes in pump body. The rotor should be installed with the rounded side of the splines toward the generator end of the pump.*
5. Install pressure plate in pump cover.
6. Install filter retainer and filter on pump cover.
7. Install pump cover to pump body with three bolts.
8. Install plunger and flow spring in pump cover.
9. Install plug and O-ring, cover plate and retainer spring.
10. Install oil filter retainer spring in pump cover.
11. Install reservoir with two bolts and two sealing washers. *The brass fitting seats are of the pressed-in type and are replaceable in the event of a fitting leak. Tap threads in the hole of the seat and then pull the seat by using a bolt threaded into the tapped out seat and a flat washer and nut as an extractor.*
12. When installing new seats, align the seat in its bore and press it into place, using the correct hose or tube fitting as a pressing tool.
13. Install pump on vehicle and bleed system of air.

CORVAIR

INDEX OF SERVICE OPERATIONS

PAGE NO.

BRAKES
Adjustments 451
Brake Cylinder Sizes 420
Hydraulic Brake System 250
Master Cylinder, Replace 452

CLUTCH
Clutch Linkage, Adjust 436
Clutch, Replace 437

COOLING SYSTEM
Blower Bearing, Replace 433
Blower, Replace 433
Crankcase Cover, Replace 433

ELECTRIC SYSTEM
Dash Gauge Service 93
Distributor, Replace 433
Distributor Specifications 421
Generator Service 27
Generator, Replace 433
Generator Specifications 421
Generator Regulator Service 27
Generator Regulator Specifications 421
Ignition System Service 7
Ignition Timing 433
Starter, Replace 434
Starter Service 65
Starter Specifications 421
Starter Switch Service 85

ENGINE
Camshaft, Replace 426
Cylinder Head, Assemble 428
Cylinder Head, Replace 428
Cylinders and Pistons 430
Crankcase, Replace 430
Crankshaft, Install 426
Engine Description 424
Engine, Disassembly 426
Engine, Reassemble 426
Engine Rear Housing, Replace 432
Exhaust Manifold Sleeves 430
Main Bearings 431
Pistons and Cylinders 430

PAGE NO.

Piston Pins, Replace 430
Piston Rings, Replace 430
Push Rods, Replace 429
Rocker Arms, Replace 428
Rod Bearings, Replace 430
Timing Gear Marks 426
Valves, Adjust 428
Valves, Grind 429
Valve Guides 429
Valve Lifters 429
Valves, Remove 429
Valve Seat Inserts 429
Valve Springs 429

ENGINE OILING
Crankcase Ventilation 9
Crankcase Vent Tube, Replace 432
Oil Pan, Replace 431
Oil Pump Gears, Replace 431
Oil Pump Repairs 431
Oil Pressure Regulator, Replace 432
Oil Cooler and By-Pass Valves 432
Oil Cooler, Clean 432
Oil Cooler, Replace 432
Oil Filter Adapter 432
Seal, Crankshaft Pulley and Engine Rear Housing 432
Seal, Flywheel Housing 432

FUEL & EXHAUST SYSTEM
Carburetors 434
Crankcase Ventilation 9
Fuel Pumps 104

POWER TRAIN
Power Train, Replace 422
Separation of Components 423

REAR AXLE
Axle Shaft, Replace 447
Differential Carrier Repairs 448
Rear Axle Repairs 448
Rear Axle Specifications 420
Side Bearing Sleeve Seal, Replace 448
Rear Axle U-Joint, Replace 447

PAGE NO.

SPECIFICATIONS
Brake Cylinder Sizes 420
Capacity Data 422
Carburetor 435
Crankshaft 421
Distributor 421
Engine Tightening 420
General Specifications 420
Generator & Regulator 421
Main Bearings 421
Piston Pins 421
Piston Rings 421
Pistons 421
Rear Axle 420
Rod Bearings 421
Starting Motor 421
Tune Up 420
Valves 420
Wheel Alignment 422

STEERING GEAR
Steering Gear Adjustments 453
Steering Gear, Overhaul 454
Steering Gear, Replace 454

SUSPENSION
Front Wheel Bearings, Adjust 452
Front Suspension Repairs 452
Rear Suspension Repairs 453
Wheel Alignment (front) 452
Wheel Alignment (rear) 452
Wheel Alignment Specs. 422

TRANSMISSION, AUTOMATIC
Adjustments 439
Description 439
Maintenance 439
"In Truck" Repairs 440
Shift Linkage 439
Transmission, Overhaul 442
Trouble Shooting 446

TRANSMISSION, MANUAL
Transmission, Assemble 438
Transmission, Disassemble 437
Transmission Repairs 437
Transmission, Replace (See Power Train Section)

TUNE UP SERVICE 2

GENERAL SPECIFICATIONS

Year	Mode	Engine	Bore and Stroke	Cubic Inch Disp.	Comp. Ratio	Brake H.P. @ R.P.M.	Torque Lbs. Ft. @ R.P.M.	Engine Oil Cap. Refill, Qts.	Normal Oil Pressure
1961–63	R1205 Corvan	6-145 OHV	3.4375 x 2.60	145	8.0	80 @ 4400	128 @ 2300	4	35
	R1206 Greenbrier	6-145 OHV	3.4375 x 2.60	145	8.0	80 @ 4400	128 @ 2300	4	35
	R1244 Loadside①	6-145 OHV	3.4375 x 2.60	145	8.0	80 @ 4400	128 @ 2300	4	35
	R1254 Rampside	6-145 OHV	3.4375 x 2.60	145	8.0	80 @ 4400	128 @ 2300	4	35

①—1961–62 only.

ENGINE TIGHTENING SPECIFICATIONS★

★Torque specifications are for clean and lightly lubricated threads only. Dry or dirty threads produce increased friction which prevents accurate measurement of tightness.

Year	Spark Plugs Ft. Lbs.	Cylinder Head Bolts Ft. Lbs.	Exhaust Manifold Ft. Lbs.	Rocker Arm Stud Nut Ft. Lbs.	Rocker Arm Stud Ft. Lbs.	Rocker Arm Cover Ft. Lbs.	Connecting Rod Cap Bolts Ft. Lbs.	Crankcase Bolts Ft. Lbs.	Flywheel to Crankshaft Ft. Lbs.	Vibration Damper or Pulley Ft. Lbs.
1961–63	20–25	27–33	10–20	5–10	27–33	3–5	20–26	①	20–26	50–60

①—Torque crankcase halves to 42–48 ft. lbs. with 7/16″ bolts; for 5/16″ bolts 7–13 ft. lbs.

TUNE UP SPECIFICATIONS

★Because of the difference in rate of expansion between aluminum head and steel spark plug it is advisable to allow engine to cool before removing plugs.

Year	Model	Ground Polarity and Voltage	Spark Plug★		Distributor		Firing Order ①	Ignition Timing		Idle Speed RPM In Drive	Compression Pressure @ Cranking Speed Minimum
			Type ④	Gap Inch	Point Gap Inch	Cam Angle Degrees		Mark	Location		
1961–63	All	N-12	46FF	.035	③	32-34	145236	②	Pulley	500	130

①—Right rear cylinder is No. 1 and left rear cylinder is No. 2. Thus, reading in order from the rear, the right bank is numbered 1–3–5 and the left bank 2–4–6.

②—Powerglide 13°BTC, synchromesh trans. 4°BTC.
③—New points .019″, used points .016″.
④—AC.

VALVE SPECIFICATIONS

Year	Model	Valve Lash		Valve Angles		Valve Spring Installed Height	Valve Spring Pressure Lbs. @ In.	Stem Clearance		Stem Diameter	
		Int.	Exh.	Seat	Face			Intake	Exhaust	Intake	Exhaust
1961–63	All	1 Turn①		45	44	1½	145 @ 1 5/32	.001–.0027	.0015–.0032	.3419	.3414

①—With all lash removed, tighten screw one additional turn to center lifter plunger. See text for details.

REAR AXLE AND BRAKE CYLINDER SPECIFICATIONS

Year	Model	Ring Gear & Pinion Backlash, Inch	Drive Pinion Adjustment	Drive Pinion Bearing Preload, Inch Lbs.	Drive Pinion Bearing Adjustment	Axle Shaft End Play, Inch	Hydraulic Cylinder Bore Sizes, Inch		
							Wheel Cylinder		Master Cylinder
							Front	Rear	
1961–63	All	.005–.008	Shim	①	Adj. Sleeve	None	1⅛	1	1

①—14–16 inch lbs. for new bearings, 9–11 inch lbs. for used bearings.

PISTONS, PINS, RINGS, CRANKSHAFT & BEARINGS

Year	Model	Fitting Pistons	Ring End Gap ① Minimum		Wrist-pin Diameter	Rod Bearings		Main Bearings			
			Comp.	Oil		Shaft Diameter	Bearing Clearance	Shaft Diameter	Bearing Clearance	Thrust on Bearing No.	Shaft End Play
1961-63	All	②	.010	.010	.8001	1.799–1.800	.0007–.0027	③	④	1	.002–.006

①—Oversize rings not furnished. New rings should be fitted to tightest part of cylinder if cylinder is tapered.
②—Cylinder and piston must be replaced as a unit if bore is worn or tapered in excess of .005″.
③—Nos. 1 and 2—2.0978–2.0988″; Nos. 3 and 4—2.0983–2.0993″.
④—Nos. 1 and 2—.0012–.0027″; Nos. 3 and 4—.0007–.0022″.

DISTRIBUTOR SPECIFICATIONS

Year	Model	Distributor Part No. ②	Rotation ①	Breaker Gap	Dwell Angle Deg.	Breaker Arm Spring Tension	Centrifugal Advance Degrees @ R.P.M. of Distributor		Vacuum Advance	
							Advance Starts	Full Advance	Inches of Vacuum To Start Plunger	Max. Adv. Dist Deg. @ Vacuum
1961	With Std. Trans.	1110258	C	③	32-34	19–23	0 @ 200	16 @ 1800	6	11 @ 15
	With Auto. Trans.	1110259	C	③	32-34	19–23	0 @ 850	10 @ 1800	7	11 @ 16
1962	With Std. Trans.	1110269	C	③	32-34	19–23	1 @ 600	17 @ 1800	6	12 @ 16
	With Auto. Trans.	1110271	C	③	32-34	19–23	1 @ 800	12 @ 1850	7	12 @ 17
1963	With Std. Trans.	1110294	C	③	32–34	19–23	1 @ 400	16 @ 1800	6	12 @ 16
	With Auto. Trans.	1110295	C	③	32–34	19–23	1 @ 800	12 @ 1850	7	12 @ 17

①—Stamped on distributor housing plate. ②—As viewed from top in installed position. ③—New points .019″, used .016″.

GENERATOR AND REGULATOR SPECIFICATIONS

★To polarize generator, reconnect the leads to the regulator; then momentarily connect a jumper wire from the "Gen" to the "Bat" terminals of the regulator.

Car & Model	Generator				Brush Spring Tension, Ounces	Field Current Amperes	Regulator Number	Regulator				
								Cutout Relay		Voltage Regulator Setting Volts	Current Regulator Setting Amperes	Current and Voltage Armature Air Gap, Inch
	Generator Number	Ground Polarity	Rated Cap. Amps.	Gen. Field Ground Location★				Voltage to Close Points	Armature Air Gap, Inch			
1961–63	1102227	Negative	30	External	28	1.69–1.79	1119001	12.7	.020	14.3	30	①

①—Voltage regulator .060″, current regulator .075″.

STARTING MOTOR SPECIFICATIONS

Year	Model	Starter Number	Brush Spring Tension Oz.①	Free Speed Test			Resistance Test③	
				Amps.	Volts	R.P.M.	Amps.	Volts
1961–63	Standard Trans.	1108306	35①	58–80②	10.6	6750–10500	280–320	4
	Automatic Trans.	1108307	35①	58–80②	10.6	6750–10500	280–320	4

①—Minimum. ②—Includes solenoid.
③—Check capacity of motor by using a 500 ampere meter and a carbon pile rheostat to control voltage. Apply volts listed across motor with armature locked. Current should be as listed.

CAPACITY DATA

Year	Model	Fuel Tank Gallons	Engine Oil			3 Speed Trans. Pints	4 Speed Trans. Pints	Powerglide, Pints	Differential, Pints
			Refill, Qts. ①	Summer Grade	Winter Grade				
1961	All	18.6	4	30	10	1.9	3.3	②	3.1
1962	All	18.6	4	30	10	3	3¾	②	3.1
1963	All	18.6	4	30	10	3	3¾	②	4½

①—Add ½ quart for filter change.

②—If transmission is overhauled and if converter has not drained out, a refill will take 6 pints. A "dry" transmission will take 13–14 pints. An ordinary oil change of transmission only (not converter) will need 4½ pints.

WHEEL ALIGNMENT SPECIFICATIONS

Year	Model	Front End Alignment					Rear End Alignment			Steering Axis Inclination°
		Caster Angle°		Camber Angle°		Toe-in°	Camber Angle°		Toe-in°	
		Range	Desired	Range	Desired		Range	Desired		
1961	All	+2¼ to +2¾	+2½	0 to +½	+¼	⅛	+1 to +2	+1½	0 to ¼	7¼°
1962	All	+1¼ to +1¾	+1½	0 to +½	+¼	1/16 to 3/16	+1½ to +2½	+2	0 to ¼	7°
1963	Except Panel	+1 to +1½	+1¼	0 to —½	—¼	1/16 to 3/16	+1½ to +2½	+2	0 to ¼	4°
	Panel	+1 to +1½	+1¼	0 to —½	—¼	1/16 to 3/16	+1½ to +2½	+2	0 to ¼	4½°

Power Train Section

POWER TRAIN, REPLACE

The preferred method of removal and installation described below utilizes a special Power Train Cradle (J-7894), Fig. 1, mounted on a transmission jack with the car on a hoist. Equipment limitations may require a modified approach to this operation but certain precautions must be observed.

1. The complete power train should be supported only at the engine pan rail. Under no circumstances should it be supported on the pan itself.
2. No jacking fixture or floor support should be used unless it is capable of supporting the weight of the power train (approximately 460 lbs.).
3. The center of gravity or balance point of the power train is located approximately .200" behind the front face of the cylinder block.
4. No jack should be used that does not permit the power train to be lowered *gradually*. This is essential to avoid damage to components when close clearances are encountered during removal.

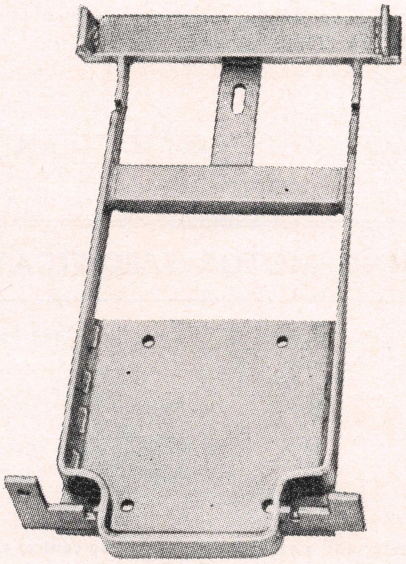

Fig. 1 Power train cradle (J-7894)

Power Train Removal

1. Remove engine access cover from vehicle floor.
2. Remove carburetor air cleaners.
3. Disconnect return air hose from air heater (if equipped).
4. Remove engine-to-body front seal retainer.
5. Disconnect carburetor linkage and electrical connections as required.
6. Remove engine rear grille and skid plate, then remove retainers from rear and side engine seals.
7. Disconnect parking brake return spring from engine mount front crossmember.
8. Pull choke cable forward until it clears engine front mount (1961).
9. Disconnect accelerator control rods at transmission idler lever and push lever-to-carburetor rod up into engine compartment.
10. Disconnect and plug fuel lines to prevent leakage.
11. Disconnect speedometer cable at differential carrier.
12. If equipped with air heater, disconnect flexible hoses at engine. If

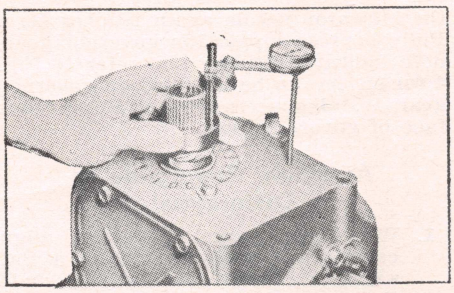

Fig. 2 Dial indicator and support mounted on transmission

equipped with gasoline heater, disconnect heater fuel line.

13. Pull U-joints from differential carrier by removing axle shafts.
14. On manual transmission jobs, disconnect clutch linkage as required. Disconnect shift tube coupling at transmission. Loosen coupling clamp and push coupling into tube until it clears engine front mount.
15. If equipped with automatic transmission, disconnect oil cooler. Also shift tube cable and grommet plate at rear of control tunnel. Remove cable from transmission by rotating throttle valve lever its full limit counterclockwise and withdraw cable from case. Place receptacle for transmission oil beneath transmission and remove oil filler tube.
16. Position hydraulic jack stand under engine, using Power Train Cradle, Fig. 1.
17. Remove two nuts from front engine mount (at transmission) and nut from front engine mount. *If front engine mounting bracket and shims are removed from transmission, the same amount of shims must be replaced. Rear wheel toe-in will be affected if shims are altered.*
18. Lower power train gradually and watch for possible interference at rear mounting and left rear lower control arm.
19. Remove exhaust pipe and muffler.

Power Train Installation

Reverse the removal procedure to install the power train. Be sure all harness wires, fuel lines and levers are out of the way prior to installation of the power train to prevent damage.

SEPARATION OF POWER TRAIN COMPONENTS

Remove Transaxle From Engine

1. With power train removed, support transaxle with chain hoist or other suitable lift and a sling.
2. Drain transmission and differential carrier.
3. Remove starting motor.
4. Remove two screws securing clutch pull rod dust seal; then remove pin attaching pull rod to clutch fork.
5. Remove bolts securing differential carrier to clutch housing. Pull transaxle away horizontally to prevent damaging clutch shaft, using care not to damage clutch fork. Remove clutch shaft.
6. To complete operation, remove clutch fork and clutch release bearing from differential carrier. The fork is attached to the carrier by a ball socket and spring retainer which is easily slipped off to allow the release bearing to be slipped off its shaft in the carrier.
7. Separate transmission from differential carrier.

Assemble Transaxle To Engine

1. Couple transmission to differential carrier, using new gasket. Be sure to engage splines of transmission mainshaft to internal splines of pinion in differential carrier. Install four bolts and torque them to 24-32 ft. lbs.
2. Install clutch release bearing and clutch fork on differential carrier. The bearing slips over the shaft and the fork has a spring retainer and socket which attaches to ball stud on carrier.
3. Install clutch shaft in transaxle; then check distance from end of clutch release bearing shaft to end of clutch shaft. If fully engaged, dimension should be $2\frac{9}{16}''$ (plus or minus $\frac{1}{32}''$).
4. Align both holes in differential carrier and clutch housing. Pilot clutch shaft splines into the clutch; then secure differential carrier to clutch housing with bolts.
5. Connect clutch push rod to clutch fork with pin; then position and secure clutch push rod dust seal to clutch housing with two screws.
6. Install starter and fill transmission and differential carrier with lubricant to the proper level.

Remove Powerglide Transaxle From Engine

1. Disconnect short length of hose connecting vacuum modulator tube to carburetor balance tube.
2. Remove starting motor.
3. Disconnect converter from engine flex plate by removing the three attaching bolts via the access hole at the 12 o'clock position in the converter housing. The converter may be rotated by prying against the starter gear teeth on the converter housing with a screwdriver.
4. Support transaxle with chain hoist or lift and sling.
5. Unfasten differential carrier from converter housing; then pull transaxle away from engine. Remove converter and turbine shaft.

Assemble Powerglide Transaxle To Engine

1. Align converter with flex plate; then pilot converter hub into crankshaft. Align bolt holes in differential carrier and converter housing; then secure transaxle to converter housing by installing top left bolt (11 o'clock position).
2. Install flex plate-to-converter bolt (at 1 o'clock position) to prevent accidental turning of converter or flex plate and loss of attaching bolt alignment.
3. Fasten remaining converter housing-to-differential carrier bolts.
4. Install starting motor.
5. Install two remaining converter-to-flex plate bolts via access hole in converter housing. The converter can then be rotated to make the attaching points accessible by turning the converter with a screwdriver against the starter gear teeth.
6. Install engine front shield.
7. If transmission filler tube was removed from engine front shield, reinsert it through the shield at this time; then connect the vacuum modulator to the carburetor balance tube with a short length of hose.
8. Insert and secure filler tube into transmission oil pan.
9. Refill transmission with fluid.

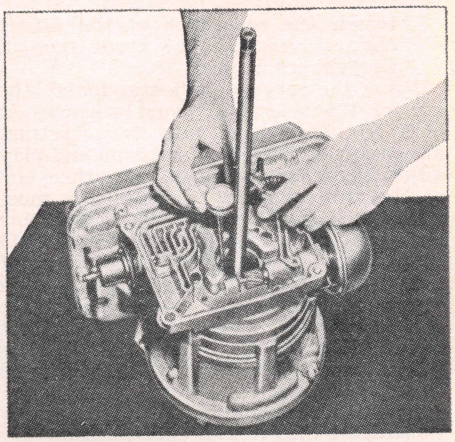

Fig. 3 Measuring mounting difference with dial indicator and support (J-8364)

Separate Powerglide From Differential

1. With transaxle separated from engine, place transaxle on a flat surface.
2. Pull turbine shaft carefully through transmission and carrier, being careful not to damage turbine shaft bushings on pump shaft splines.
3. Remove transmission governor.
4. Unfasten transmission from carrier and pull transmission straight away from carrier to prevent pump shaft from damaging bushings in transmission and pinion shaft.
5. Remove governor gear and selective spacer from pinion shaft of differential carrier.

Selective Thrust Washer Determination

For proper operation it is necessary that sufficient end play of the Powerglide components be maintained by selection of thrust washers of various thicknesses. In the Corvair transmission, selective thrust washers are used at two locations:

1. At the front of the transmission between the front pump body and clutch drum.
2. At the rear of the transmission be-

tween the rear face of the planet carrier hub and the front face of the governor gear.

From the serviceman's standpoint, the use of the selective thrust washers at both the front and rear is a distinct advantage as final transmission end play adjustment can be made at either end of the transmission, whichever is most advantageous. *Also, there is no condition in which the selective washers would be gauged at both locations. Thus, if the repair requires axle and transmission separation, make the washer selection at the rear. Of course, if they are not to be separated, the rear thrust washer is inaccessible and the selection must be made at the front.*

Prior to reassembly of the transmission to the differential carrier after any repair which required separation of these units, the rear selective thrust washer must be determined. *Be sure low band is properly adjusted to prevent disengagement or cocking the apply linkage before tipping the transmission in its end.*

To determine the size spacer needed a dial indicator and a special support stand is available. Install the dial indicator on the support as shown in Fig. 2. Without gasket, place support J-8364 on rear pump cavity surface of transmission case so that dial indicator tip rests on planet carrier hub. Adjust indicator on J-8364 to permit maximum indicator travel and set dial at zero.

INDICATOR READING	NUMBER .016" SPACERS REQ'D	THICKNESS OF SPACERS INSTALLED
*.025—.046	None	
.047—.062	1	.016 ± .001
.063—.078	2	.032 ± .002
.079—.094	3	.048 ± .003
.095—.110	4	.064 ± .004
.111—.126	5	.080 ± .005
.127—.142	6	.096 ± .006
.143—.155	7	.112 ± .007

*If initial indicator reading is below .025", replace thrust washer at the clutch hub—front pump with .050" thrust washer, then repeat entire rear thrust spacer selection procedure.

Fig. 4 Automatic transmission rear thrust spacer usage chart

Slowly lift J-8364 and indicator off rear pump cavity and note its range of needle deflection from zero position. Properly positioned on support, indicator should not deflect more than .050" (one-half turn) when removed; otherwise raise or lower dial indicator on support post as required and again zero the gauge.

Place gauge and support on governor gear as shown in Fig. 3. Lower support slowly so that revolutions of indicator can be counted. Measurement starts once the indicator needle again reaches zero. Fully depress support on governor gear, note indicator reading and refer to Fig. 4 for spacers to be installed on governor gear. Install spacers selected at the front face of governor gear.

Assemble Powerglide to Differential

1. With new gasket in place, align carrier and transmission on a flat surface and guide pump shaft through differential carrier so as not to damage the bushing in the pinion. Then engage pinion shaft splines with planet carrier internal splines in transmission.
2. Install governor.
3. Secure transmission to carrier with four bolts. Drive the two bolts from the carrier side first and tighten to 24-32 ft. lbs.
4. Install turbine shaft, being sure to engage the two sets of shaft splines.
5. Install converter, being sure to get full engagement of splines on stator shaft, turbine shaft and front pump shaft. *Once the converter is installed, do not tip rear of transaxle downward unless some improvised converter holding plates are used to prevent converter falling off.*

Engine Section

On all service operations where threads enter aluminum, use an anti-sieze compound, such as Permatex No. 404 or its equivalent. Such service operations that can be performed with the engine in the vehicle will be so noted directly under the unit heading.

ENGINE DESCRIPTION

The engine, Fig. 5, is the horizontal opposed air cooled six-cylinder type. The cast aluminum alloy crankcase is vertically divided into two halves which are held together by bolts at the parting line. Each crankcase half has three pilot openings for individual cast iron cylinders which are positioned to the openings by means of four long studs at each cylinder. These studs pass freely through holes in the cylinder cooling fin structure and the cylinder head and serve to secure the cylinders and head to the crankcase.

The two opposing and identical aluminum cylinder heads incorporate cooling fins and built-in intake manifolds and contain wedge-shaped combustion chambers and valves for each cylinder. The valves are actuated by push rods through stamped rocker arms. Steel alloy valve seat inserts are provided for durability.

Steel tubes are used to house the push rods in the open area between the crankcase and cylinder heads adjacent to the cylinders. These tubes serve to protect the exposed push rods as well as drain back oil from the cylinder heads to a relatively shallow oil pan bolted to the bottom of the crankcase, Fig. 6.

The camshaft, which actuates the push rods through hydraulic lifters, is nested between the two halves of the crankcase below the crankshaft. This camshaft differs from the conventional design in that each of the three exhaust valve lobes are twice the width of the intake valve lobes and actuate a pair of exhaust valve lifters. The camshaft journals ride directly on the machined base metal of the crankcase. Camshaft end thrust is taken by a thrust washer located between the camshaft gear and front bearing.

No separate main bearing caps are required since the four bearings are supported entirely by the crankcase halves. The crankshaft drives the camshaft through a composition gear and drive hub. The front crankshaft seal is installed to the aluminum clutch housing (or flywheel housing) which mounts to the front of the crankcase assembly.

The engine rear housing mounts to the rear of the crankcase over four free-fitting long studs. This housing contains the oil pump, crankshaft seal and primary oil passages, Fig. 7. It provides the mounting for the distributor and the generator adapter to which the fuel pump, oil fill pipe, generator, oil filter and idler pulley are mounted.

A rectangular crankcase cover mounts to the top of the crankcase and forms a base for the centrifugal blower.

Cooling System

The engine is entirely shrouded with sheet metal pieces that attach directly to the engine and form a plenum chamber—a condition in which the pressure of the air in an enclosed space is greater than that of the outside atmosphere.

A centrifugal blower, mounted to the top of the crankcase cover, spins on a vertical shaft to deliver cooling aid outward and downward over the cylinders and heads. The air then enters a duct under each bank from where it travels rearward to be exhausted at an opening at the rear of the engine.

The rate of engine cooling is regulated by a bellows-type thermostat at the lower part of the plenum. This thermostat operates a cooling air valve which moves in and out of the eye of the blower to control the air flow. The ring closes the blower air intake until the engine has reached its correct operating temperature. In the event of a failed thermostat bellows, the ring will remain

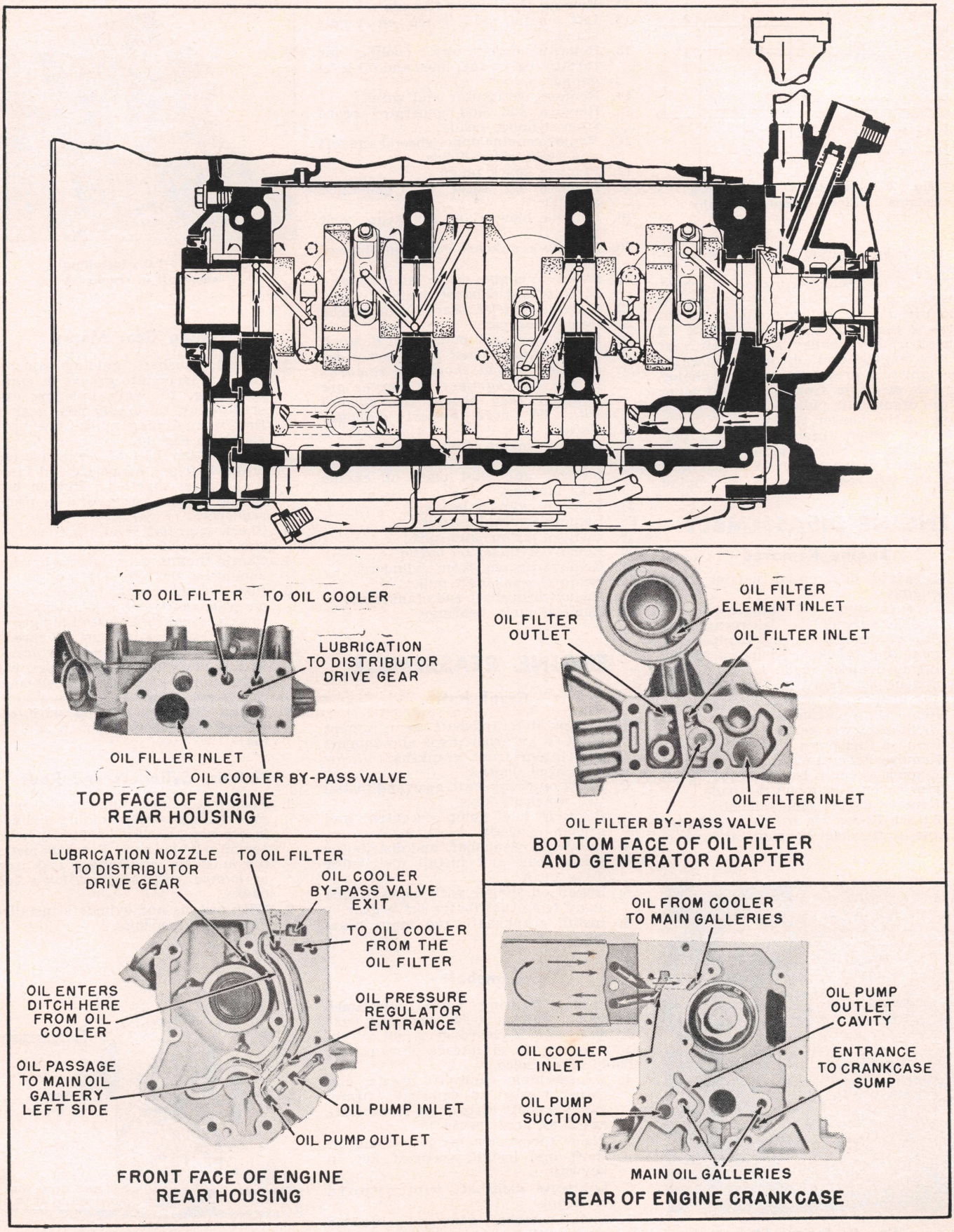

Fig. 7 Engine lubrication

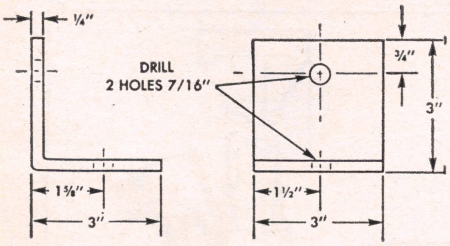

Fig. 8 Dimensions for making engine lifting adapter locally

in the open position to prevent overheating of the engine.

The blower, which runs on a sealed, permanently lubricated ball bearing, is belt-driven by a pulley mounted at the extreme rear end of the crankshaft. A generator drive pulley at the left rear of the engine and an idler pulley at the right rear provide a means of changing belt direction from a vertical plane at the crankshaft pulley to a horizontal plane at the blower pulley.

An oil cooler, through which a portion of the air passes before discharge, is mounted above the air exhaust duct near the left rear corner of the engine.

ENGINE DISASSEMBLY

Engine Removed

1. Separate differential carrier from engine.
2. Remove clutch (if equipped).
3. A difference of 1⅝" between center line of crankshaft and engine rear mounting bracket requires a special lifting adapter made locally to the dimensions shown in Fig. 8. Mount the adapter as shown in Fig. 9.
4. Remove air cleaners.
5. Remove blower belt.
6. Remove fuel pump.
7. Remove generator.
8. Remove vacuum balance tube at engine carburetor mounting pads.
9. Remove engine front shield.
10. Attach lifting rig to lifting adapter and at flywheel housing lifting eye.

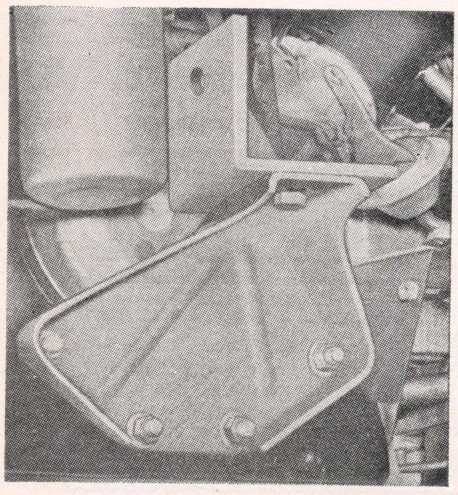

Fig. 9 Engine lifting adapter mounted

11. Remove flywheel or flex plate.
12. Lift engine and place on repair stand.
13. Remove carburetors, cooling air throttle valve, fuel lines and oil level gauge.
14. Remove distributor and wires.
15. Remove coil and generator brace from cylinder head.
16. Remove engine upper shroud and left and right side shields.
17. Remove spark plugs.
18. Remove oil filter and generator adapter.
19. Remove blower and crankcase vent tube.
20. Remove crankcase cover and blower bearing.
21. Remove engine rear and lower shrouds and exhaust ducts.
22. Remove muffler bracket and shield.
23. Remove oil pan.
24. Remove exhaust manifolds. *Exhaust manifold-to-exhaust port sleeves are a press fit and should be removed with a soft hammer. If sleeves are removed they should be replaced with the next largest diameter sleeve.*
25. Remove engine front shrouds.
26. Remove engine rear mounting bracket and skid plate at engine rear housing.
27. Remove cylinder heads.
28. Remove hydraulic lifters.
29. Remove pistons and rods.
30. Remove cylinder oil baffle.
31. Remove pistons from cylinders.
32. Remove crankshaft pulley.
33. Remove camshaft and crankshaft.
34. Remove main bearings.

ENGINE, REASSEMBLE

Crankshaft

1. To install crankshaft gear, mount shaft in an arbor press and support it between front crankshaft throw and front journal.
2. Press on crankshaft gear and install two woodruff keys.
3. Position fuel pump eccentric and spacer on shaft.
4. Lubricate crankshaft and distributor drive gear and install distributor drive gear.
5. Install oil slinger with concave side away from distributor drive gear.
6. Install crankshaft and main bearings.

Camshaft

Camshaft bearing journal clearance should be .0015" to .0035" new and .002" to .004" used. If clearance is not within limits either the crankcase or camshaft should be replaced.

1. To assemble camshaft gear and thrust washer to camshaft, firmly support shaft at back of front journal in an arbor press.
2. Place thrust washer over end of shaft and install woodruff key in keyway.
3. Lubricate camshaft with hypoid lubricant.
4. Install camshaft gear and press into place until it bottoms against thrust washer.

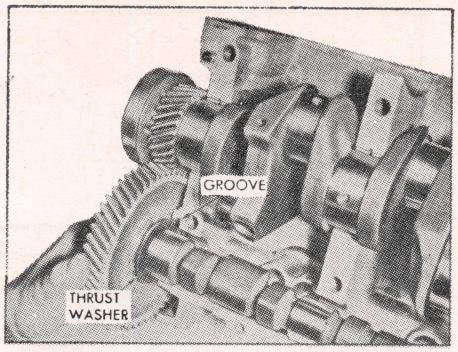

Fig. 10 Installing camshaft in crankcase

Timing Gear Marks

1. Install camshaft, guiding camshaft thrust washer into groove in crankcase, Fig. 10, while indexing camshaft gear to crankshaft gear so that valve timing marks line up as shown in Fig. 11.
2. Install other half of crankcase onto crankshaft and camshaft and fasten both halves together. Tighten bolts to the proper torque and in proper sequence.
3. Check camshaft end play, which should be .002" to .007".
4. Check timing gear backlash which should be .002" to .004".
5. Install front crankshaft oil slinger on crankshaft gear with flange side toward crankcase. Install slinger retaining snap ring, using care to avoid scratching sealing surface.
6. Install main oil gallery plugs with Permatex 404 anti-freeze compound or its equivalent.
7. Install flywheel housing with new gasket and torque bolts to 20-30 ft. lbs.

Pistons, Cylinders and Rods

1. Push piston into cylinder with hammer handle while holding cylinder in one hand until it is slightly below top of cylinder bore. *Notch on piston top must be installed towards front of engine (flywheel end) on both banks.*
2. With pistons and cylinders installed, install rod bearings.

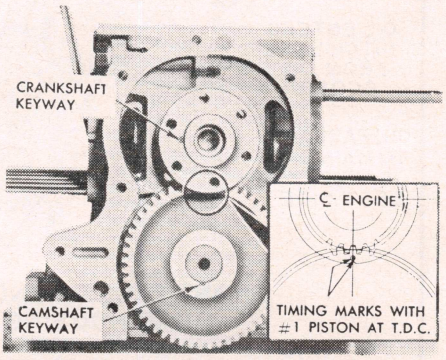

Fig. 11 Timing marks aligned for correct valve timing

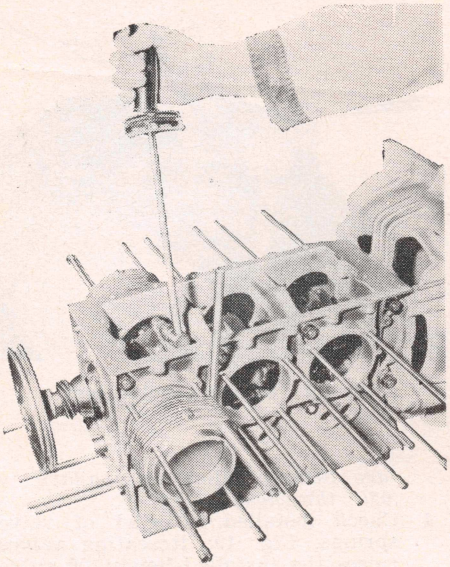

Fig. 12 Showing tubes holding opposite cylinder in place while torquing connecting rod bolts

3. Position crankcase pins by turning crankshaft with pulley so that crankshaft journal is in line with piston and rod to be installed.
4. Place a piece of plastic hose with at least a $\frac{5}{16}$" diameter over each rod bolt to protect shaft journal.
5. Install a new copper cylinder gasket over cylinder pilot, Fig. 12.
6. Push piston with hammer handle while guiding cylinder bore pilot into crankcase. Remove plastic hose from rod bolts and install rod bearing and cap. Torque rod nuts to 20-26 ft. lbs.
7. Install cylinder holding tubes on cylinder studs to hold cylinder in place. Continue procedure until all cylinders and pistons are installed, Fig. 12.
8. Install cylinder air baffles with retaining springs, Fig. 13. *Air baffles are not interchangeable.*

Crankcase Cover and Blower Bearing

1. Install new gasket on crankcase.
2. Install crankcase vent and another crankcase gasket.
3. Install crankcase cover and blower bearing and torque bolts to 7-13 ft. lbs.
4. Install crankcase vent tube and gasket.

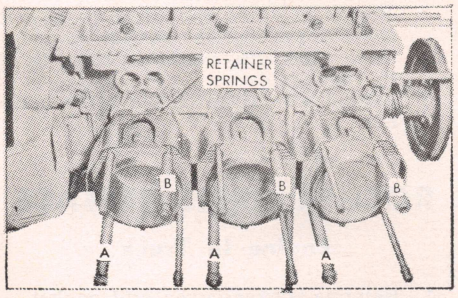

Fig. 13 Installing cylinder and piston. Tubes "A" and "B" are holding cylinders in place

Oil Pump Screen and Tube

If the original or a new oil pump screen and tube assembly is to be installed in the original crankcase, the outside diameter of the end of the tube will have to be tinned with solder before installing in crankcase.

1. Install oil pump screen and pick-up tube into cylinder case with pick-up screen positioned parallel to oil pan rails. Secure tube with clamp.
2. Coat threads on engine temperature and oil pressure sending units with anti-seize compound (Permatex 404) or its equivalent. Torque oil pressure unit to 45-65 ft. lbs. and temperature unit 35-45 ft. lbs.

Cylinder Head

Be sure all cylinder head gaskets are in cylinder head combustion chambers as shown in Fig. 14. Remove all cylinder retaining tubes from cylinder bank to which cylinder head is to be installed.

1. Install cylinder head, Fig. 15.
2. Install six flat washers and nuts on long studs, adjacent to intake manifold.
3. Install six new "O" rings, lubricated with lubriplate, in counterbore of cylinder head (location for rocker arm studs) and coat rocker stud bore with anti-sieze compound.
4. Install rocker arm studs, with threads coated with anti-sieze compound.
5. Tighten nuts and rocker studs in sequence shown in Fig. 16. Torque nuts and rocker studs to 27-33 ft. lbs.

Push Rod Oil Drain Tubes

1. Lightly oil hydraulic lifters and install in their proper bores.
2. Install push rod oil drain tubes through cylinder head, Fig. 17. Place "O" rings, one on each end of drain tube as shown. Oil "O" rings and push in place at lifter bore in crankcase and cylinder head.
3. Install push rods with side oil hole up into valve rocker socket, Fig. 18 (blue band end).
4. On early production engines, install push rod guides in place over rocker studs and push rods and tighten bolts. *On late production engines, push rod guides are installed under valve rocker studs.*
5. Install rocker arms, balls and nuts loosely in place. Adjust valve lash as outlined elsewhere in this section, after installing distributor.

Final Assembly

1. Install engine rear housing.
2. Install crankshaft pulley. After pulley bottoms in place, back off retaining bolt one turn and then torque it to 60-80 ft. lbs. *Do not drive pulley in place as this will damage crankshaft thrust bearing and crankcase.*
3. Install oil cooler.
4. Install exhaust manifolds.
5. Install oil filter and generator adapter.

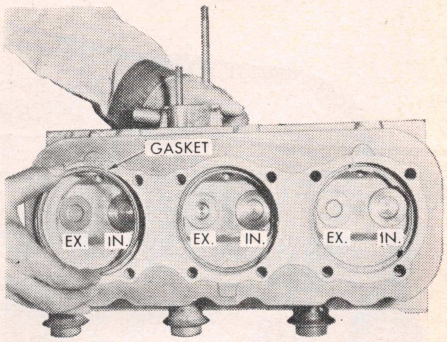

Fig. 14 Installing cylinder head gaskets

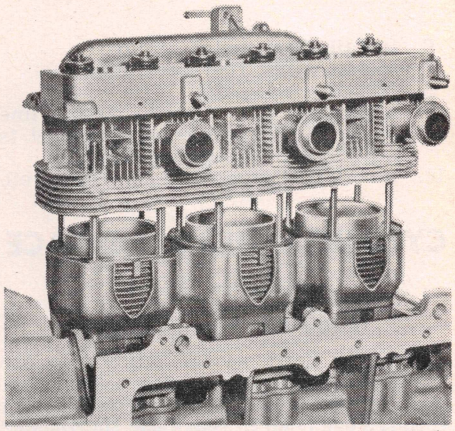

Fig. 15 Installing cylinder head

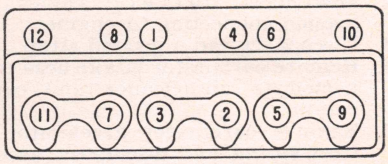

Fig. 16 Cylinder head tightening sequence

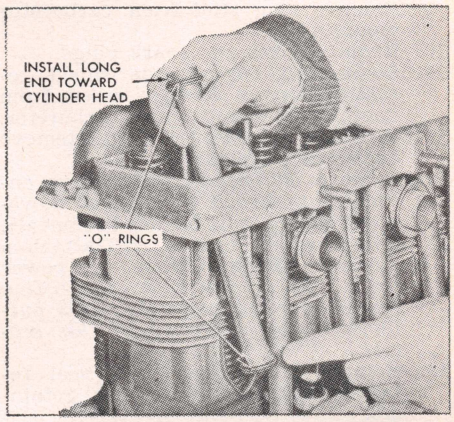

Fig. 17 Installing push rod drain tubes

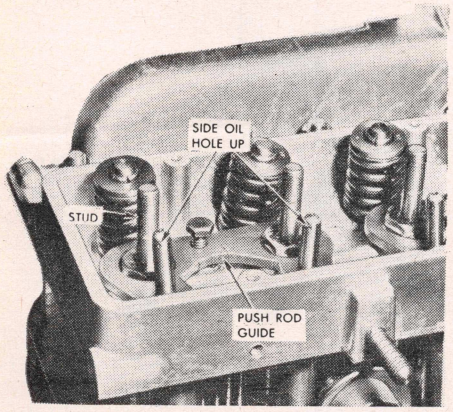

Fig. 18 Push rod installation

6. Install sheet metal removed.
7. Install wires, fuel lines, etc.
8. Install spark plugs.
9. Install oil pan. Check parting line to see if flywheel housing gasket is far enough up for good sealing.
10. Install fuel pump and add engine oil.

CYLINDER HEAD REPLACE

Engine In Truck

1962-63 Service Note

Cylinder head service procedures are the same as previous models except that the automatic choke control rod passes through the head to reach the thermostat and must be removed before the head can be removed.

Left Bank Head:

1. Drain crankcase oil.
2. Disconnect battery cables and ground connection to engine.
3. Disconnect radio ground strap.
4. Remove carburetor intake hose (connected to air cleaner and carburetor).
5. Remove carburetor accelerator return spring and disconnect accelerator rod from carburetor.
6. Disconnect left-side carburetor cross-shaft support (2 screws) from carburetor.
7. Disconnect fuel line at carburetor.
8. Remove carburetor.
9. Remove long stud from carburetor mounting.
10. Remove wires and spark plugs.
11. *Loosen* all engine side shield retaining screws. *Remove* screw from engine side shield under carburetor, attached to cylinder head. Remove engine side shield.
12. Remove oil cooler (this allows engine rear shroud freedom of movement during cylinder head removal).
13. Raise car on a hoist and attach a suitable lifting fixture to power train. *See requirements for lifting and supporting power train as outlined at the beginning of this section.*
14. Remove both engine side seal retainers and engine rear seal retainers.
15. Remove engine rear center shield and seal assembly.
16. Remove lower engine shroud.
17. Remove exhaust pipe-to-manifold nuts.
18. Open french locks on exhaust manifold and remove holding clamp nuts.
19. Remove exhaust manifold.
20. Remove engine rear mounting cotter pin, nut and washer from below body rear mounting bracket.
21. Remove rocker arm cover while holding a pan below to catch oil draining from cylinder head.
22. Remove rocker arms, push rods and push rod guides. *Present production engines require removal of valve rocker studs to remove push rod guides.*
23. Remove rocker arm studs, washers and "O" rings from head. Also, remove push rod guides from late production engines.
24. Remove "O" rings from bottom of push rod drain tubes with a pair of hooked tweezers. *To remove No. 5 exhaust push rod drain tube, it is necessary to remove the right side exhaust manifold.*
25. Remove retaining nuts and washers retaining head.
26. Carefully lower engine assembly approximately 3″ to clear cylinder head carburetor flange.
27. Remove cylinder head from crankcase studs.
28. Reverse above procedure to install the head and tighten head nuts in the sequence shown in Fig. 16.

Right Bank Head: Removal and installation of the right bank head is essentially the same as the left head, except the coil, oil pressure and oil temperature sending units must be disconnected. Also remove the choke heat pipe and choke fresh air pipe from the exhaust manifold.

CYLINDER HEAD ASSEMBLE

Cylinder heads are identical except for location of vacuum balance tube hose connector which is on one side of the carburetor mounting pad on the right bank and the other side on the left bank.

1. Install each valve coated with SAE 30 engine oil in the valve guide from which it was removed or to the valve guide it was fitted.
2. Lightly coat valve spring shim with petrolatum to hold shim in place and place on valve spring seat.
3. Set valve spring in place on shim. Place valve cap in position, compress valve spring and install valve locks. *Each valve spring must have a hardened shim (.020″ minimum) under it to protect aluminum surface. Service shims are available in .030″ thickness.*
4. Check installed height of valve springs, Fig. 19. Reseating valves raises the installed height of valve springs and, if excessive, will have the effect of weak valve springs. If installed height of springs do not come within the limits illustrated, install a .030″ shim. At no time should the spring be shimmed to give an installed height of less than the minimum limits.
5. Coat cylinder head and cylinder counterbore pilot with petrolatum to retain gasket and install new head gaskets, Fig. 14.

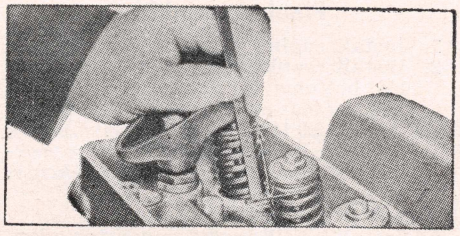

Fig. 19 Checking installed height of valve springs

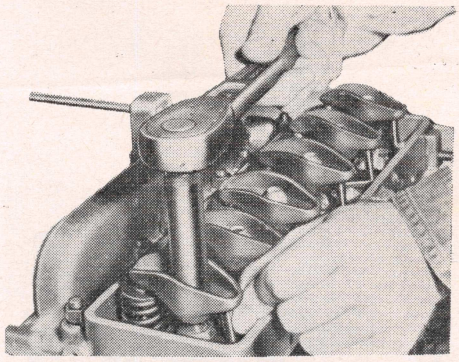

Fig. 20 Adjusting valve lash

VALVES ADJUST

Engine In Truck

1. After engine has reached normal operating temperature, remove the valve cover and install a reworked valve cover (cut the top out of a used valve cover) and gasket on cylinder heads to prevent oil from running out.
2. With engine running at idle, back off valve rocker arm nut until rocker arm starts to clatter.
3. Turn rocker arm nut down slowly until the clatter just stops. This is the zero lash position, Fig. 20.
4. *Turn nut down ¼ turn and pause 10 seconds until engine runs smoothly. Repeat additional ¼ turns, pausing 10 seconds each time, until nut has been turned down one full turn from the zero lash position. This one turn preload adjustment must be done slowly to allow the lifter to adjust itself to prevent the possibility of interference between intake valve head and top piston.*
5. Adjust all valves in the same manner.

ROCKER ARMS REPLACE

Engine In Truck

1. Remove rocker cover and gasket.
2. Remove rocker arm nuts, balls and rocker arms.
3. Replace parts and adjust valve lash.
4. Install cover and gasket.

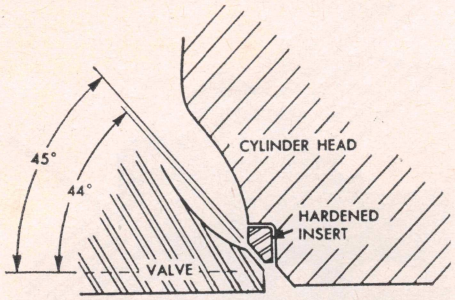

Fig. 21 Relation of valve and seat angles

PUSH RODS REPLACE

Engine In Truck

1. Remove valve cover and gasket.
2. Loosen valve rocker arms, balls and nuts from cylinder requiring push rod replacement.
3. Remove push rod and guide and install new push rod with .050″ side oil hole up into cylinder head.
4. Adjust valve lash and replace cover and gasket.

1962-63 Service Note

When a replacement push rod has a paint stripe at one end, this painted end must be installed in contact with the rocker arm. To provide durability, a hardened insert is incorporated in the rocker arm end of these push rods.

Near the color striped end of the push rod, a .050″ lubricant metering hole exists in the side wall. The push rod end having this hole must be assembled toward the rocker arm to provide oil flow to the valve train.

VALVES, REMOVE

Head Removed

With cylinder head removed, use a suitable valve spring compressor to compress the spring in order to take out the valve locks. Then remove valve spring cap, spring, shim and valve. Repeat this operation on each valve assembly. Place valves in a board with numbered holes to identify their location so that, if re-used, they can be returned to the original guide holes.

VALVE SPRINGS REPLACE

Engine In Truck

1. Drain crankcase oil.
2. Remove valve cover and gasket.
3. Remove rocker arm nut, ball and rocker arm.
4. Remove spark plug from cylinder requiring valve spring replacement and use compressed air to hold valves in closed position.
5. Install a nut on rocker stud and use a forked tool as a lever to compress valve spring far enough to remove valve locks. Then remove spring cap and spring.
6. Install spring on spring seat shim with cap. Compress spring and install valve locks.
7. Install rocker arm, ball and nut and adjust valve lash.
8. Install valve cover and gasket.
9. Install engine oil.

Head Removed

After taking out the valve springs, wash them with gasoline or other suitable solvent. Examine the springs for damage or corrosion due to acid etching, which will develop into surface cracks and cause spring failure.

Check the valve spring tension on a spring testing fixture if one is available. Spring should be compressed to 1½″ at which height it should check 58 to 64 lbs. Weak springs affect power and economy and should be replaced if not within 5 lbs. of the above limit.

If a testing fixture is not available, at least check the free length of each spring by standing it alongside a new spring. Any spring that stands shorter than the new spring used for comparison should be scrapped. Of course, cocked springs should also be discarded.

VALVE GUIDES

Head Removed

Valve guides are an integral part of the head and, therefore, cannot be removed. For service, guide holes can be reamed oversize to accommodate one of three service valves with oversize stems (.003″, .005″ and .010″).

After cleaning the valve guide holes, check the clearance with a dial indicator. Intake valve stem clearance should be .001″ to .004″ while exhaust stem clearance should be .002″ to .005″.

Clamp the dial indicator on one side of the rocker cover gasket rail, arranging the indicator so that movement of the valve stem from side to side (crosswise to head) will cause a direct movement of the indicator stem. The indicator must contact the side of the valve stem just above the cylinder head. With the valve head about $\frac{1}{16}$″ off its seat, move the stem of the valve from side to side with light pressure to obtain a clearance. By trying new valves in the guide holes it can be determined whether the valves should be replaced or the bores reamed and oversize valves installed.

Service Note

A mid-year change in 1961 and carried over into 1962 replaces the tapered stem exhaust valves with straight stem valves and releases valve stems of .003″, .010″ and .020″ oversizes for service.

VALVES, GRIND

Head Removed

In refacing valves take off only the minimum of metal required to clean up the valve faces. If the outer edge of the valve becomes too thin or sharp due to excessive grinding, the valve must be replaced. In other words the valve head margin must be at least $\frac{1}{32}$″ otherwise the valve must be replaced. The margin is the area above the contact surface of the valve face. The valve seat width after refacing should be $\frac{1}{32}$″ to $\frac{3}{32}$″ for intake valves and $\frac{1}{16}$″ to ⅛″ for exhaust valves. Valve seat angle on all valves should be 45° and should be concentric within .002″ dial indicator reading. Valve face to seat angles are parallel as shown in Fig. 21.

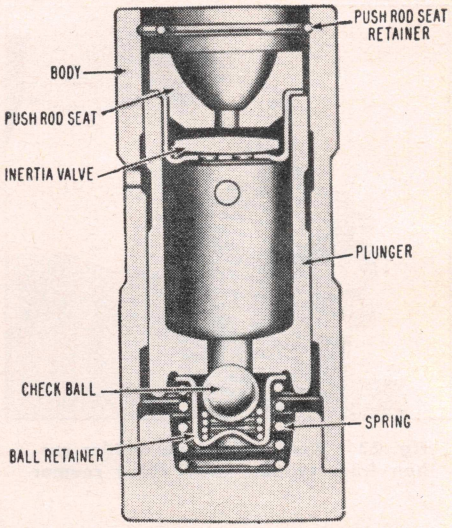

Fig. 22 Hydraulic valve lifter

VALVE SEAT INSERTS

Head Removed

When reconditioning valves, the exhaust valve seat inserts in the cylinder head should be inspected. If either valve seat inserts or valve guide bores are beyond repair, the cylinder head should be discarded and replaced with a new one.

VALVE LIFTERS REPLACE

Engine In Truck

1. Drain crankcase oil.
2. Remove valve cover and gasket.
3. Remove engine lower shroud.
4. Remove rocker arms, balls, push rod guides, push rods and push rod drain tubes from cylinder from which valve lifter is to be removed.
5. Remove lifter with a strong magnet or:
   a. Remove snap ring retaining push rod seat and remove seat. Then remove lifter with a pair of pliers inserted in valve lifter snap ring groove.
   b. Remove oil pan and squirt lifter body with solvent to remove varnish from lifter body.
6. Install valve lifters well lubricated with engine oil.
7. Install push rod drain tubes with new "O" rings and set push rods in place on lifter seats with side oil hole up next to rocker arms.
8. Install push rod guides, rocker arms, balls and nuts, valve cover and gasket.
9. Install engine oil.

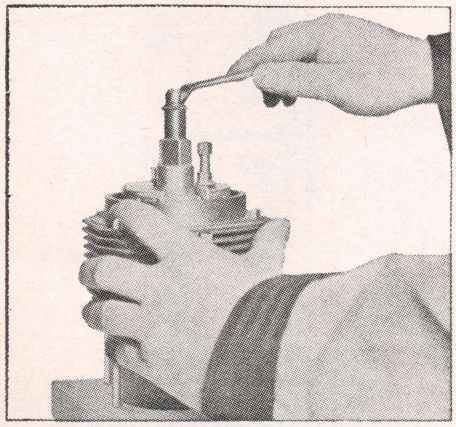

Fig. 23 Removing ridge and/or carbon from cylinder with ridge reamer

Lifters Out of Engine

1. Referring to Fig. 22, hold plunger down with a push rod and, using a small screwdriver or awl, remove push rod seat retainer.
2. Remove push rod seat and inertia valve, plunger and spring from lifter body.
3. Pull check ball retainer from plunger and remove ball and spring.
4. Clean all parts in solvent. If any parts are damaged, the entire lifter assembly should be replaced. The inertia valve in the push rod seat should move when the plunger is shaken.
5. Assemble lifter in reverse order of disassembly. Then compress plunger to open oil holes and fill plunger with SAE 10 oil. Work plunger up and down and refill.

EXHAUST MANIFOLD SLEEVES

The exhaust sleeves are a press fit into the exhaust manifold.

PISTONS & CYLINDERS

Engine Disassembled

1. Using a block of wood for a fixture, drill two holes, spaced to provide a location for two long bolts. Holes should be small enough to require driving the bolts into the wood block. Clamp wood block in vise.
2. Install cylinder over bolts on wood fixture. Holding cylinder with one hand, Fig. 23, insert ridge reamer and remove ridge and/or carbon from cylinder.
3. Check cylinder walls for out-of-round or excessive ridge at top of ring travel. If cylinders are found to have taper or wear in excess of .005″, the cylinder and piston must be replaced.

PISTON RINGS REPLACE

Engine In Truck

Bear in mind that cylinders and pistons are serviced as a unit and the operation outlined below is for replacing one or more pistons in one bank requiring ring replacement. It is not intended for complete piston and ring replacement.

1. Drain crankcase oil and remove cylinder head.
2. Remove cylinder from piston requiring new rings.
3. Remove old and install new rings. *Position oil control ring gap towards top of engine and compression rings with gap 45° from oil ring gap location. Rings must be installed with markings and inside bevel toward top of piston. Lubricate piston rings with engine oil and slide ring compressing tool, Fig. 24, over rings just enough to compress rings into piston.*
4. Reverse above procedure to install parts removed. Add engine oil, start engine and check for oil leaks.

PISTON PINS

Engine Disassembled

Piston pins should be capable of supporting their own weight in either piston boss when coated with light engine oil at 70° temperature. Higher or lower temperatures will cause false indications. *Pistons, pins and cylinders are serviced as assemblies.*

ROD BEARINGS REPLACE

Engine In Truck

1. Remove air cleaner element and carburetor intake hose.
2. Remove choke heat tube, choke fresh air hose and carburetor linkage.
3. Disconnect fuel lines at carburetor.
4. Remove left bank carburetor.
5. Disconnect choke link to choke assembly. Remove choke and air horn by removing nuts at legs of air horn support.
6. Disconnect spark plug wires.
7. Remove blower drive belt.
8. Disconnect fuel lines at fuel pump.
9. Remove carburetor cross shaft and vacuum balance tube.

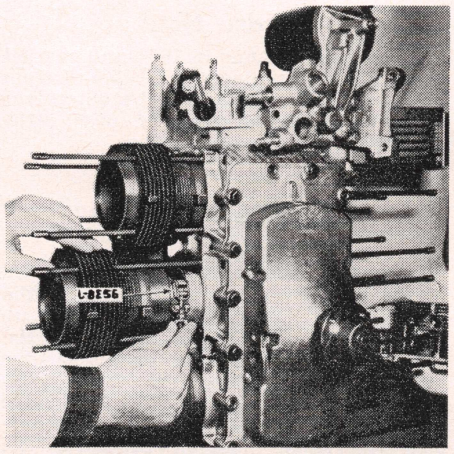

Fig. 24 Installing piston rings with aid of ring compressor (J-8356)

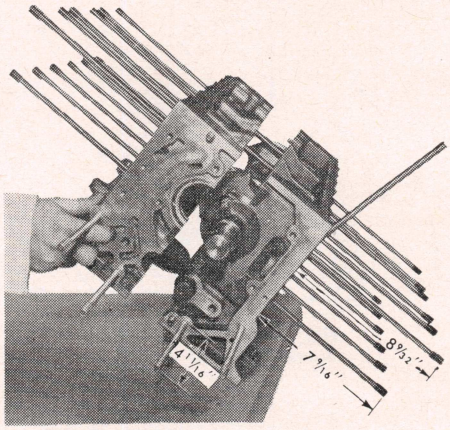

Fig. 25 Installed length of crankcase and rear housing studs

10. Remove all engine upper shroud bolts and screws.
11. Remove screws on each side of front engine shield.
12. Disconnect cooling air throttle valve thermostat rod and remove cooling air throttle valve.
13. Remove all fuel lines.
14. Remove engine upper shroud, tipping front lip up so it clears front engine shield.
15. Remove blower pulley and blower.
16. Remove crankcase cover, gaskets and crankcase vent.
17. Remove spark plug from cylinder requiring new rod bearing and remove rod cap and bearing insert. Use a piece of $\frac{5}{16}$″ plastic hose on each rod bolt to protect crankshaft journals from being scratched or marred.
18. Reverse above procedure to install parts removed. While tightening upper shroud bolts, rotate blower and check for interference at blower to upper shroud. Add engine oil, start engine and check for oil leaks.

Engine Disassembled

Rod bearing inserts are available in standard sizes and undersizes of .001″, .002″, .010″ and .020″. These bearings are not shimmed and when clearance becomes excessive the next undersize bearing insert should be used. *Do not file rod or caps in an attempt to fit bearings.*

Rod bearing clearance is checked with Plastigage in the same manner outlined for main bearings. If flattened Plastigage measurement is not over .003″ (worn) or .002″ (new) or not less than .001″ the fit is satisfactory.

CRANKCASE

Engine Disassembled

1. Remove two oil gallery plugs located at flywheel housing end of crankcase. These passages should be cleaned with solvent.
2. Check cylinder pilot bores and bearing surfaces in each half of crankcase for nicks, cracks or other damage that would interfere with the proper fit of component parts.

3. Do not use scrapers or other sharp tools to clean gasket surfaces. A good cleaning solvent should be used to dissolve gasket material or varnish that may adhere to the surfaces.

Stud and Thread Repairs

Always use anti-seize compound (Permatex 404 or equivalent) on all threads entering aluminum.

To replace crankcase studs, install long and short studs as indicated in Fig. 25. Studs are available in oversizes of .003", .006" and .009".

It should require a torque of 10 to 30 ft. lbs. to install studs. If torque is less than 10, another selected stud should be used.

Heli-coils for thread repairs are available at local auto parts jobbers and should be installed to Heli-Coil prescribed methods.

All cylinder studs installed in crankcase adjacent to the main bearing webs have blind holes while others do not.

MAIN BEARINGS

Engine Disassembled

Whenever the crankcase is parted, the bearings and crankshaft journals should be inspected. If upon inspection one half shows evidence of fatigue, distress abrasion, erosion, scoring or the like, both crankcase halves should be replaced. *Never should one half be replaced without replacing the other half.*

If the running clearance of a bearing is too great with used bearing inserts, it will be necessary to replace both bearing halves. Should this become necessary the crankshaft journal should be checked with a micrometer for out-of-round, taper or undersize dimensions.

Service Note

To prevent the possibility of mismatch of the bearing thrust flanges on rear main bearings, the left half of the bearing only has thrust flanges. The unflanged half is installed in the right half of the crankcase. This change was incorporated during 1962 production.

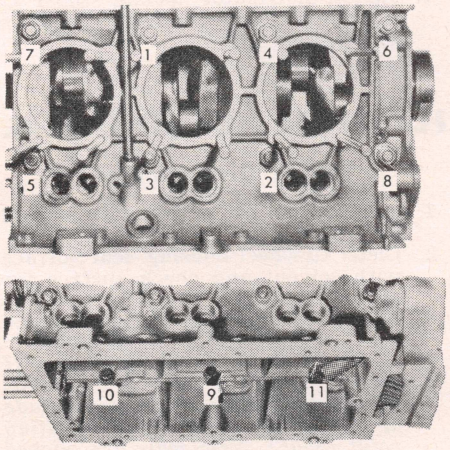

Fig. 26 Crankcase tightening sequence

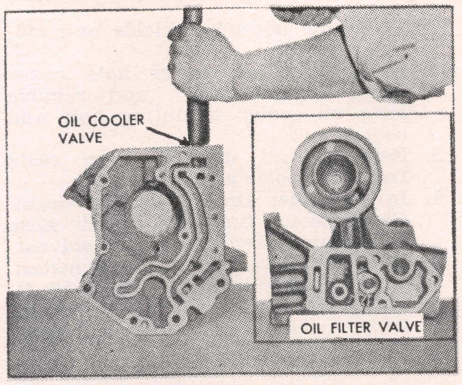

Fig. 27 Oil filter and oil cooler by-pass valve installation

Main Bearing Clearance

Main bearing clearance is checked with Plastigage, a wax-like material, available at auto parts jobbers.

To assure proper seating of the bearings, all crankcase bolts must be at their specified torque. Eight long $\frac{7}{16}$" bolts 42-48 ft. lbs., and three $\frac{5}{16}$" bolts 7-13 ft. lbs. Hold bolt head on $\frac{7}{16}$" bolts while tightening the nut. Do not tighten at bolt head. Fig. 26 shows tightening sequence. To check main bearing clearance, proceed as follows:

1. Starting with rear main bearing, remove one half of the crankcase while the other is supported on its side. Wipe oil from bearings and journal.
2. Place a strip of Plastigage the full width of the bearing (parallel to crankshaft on journal). *Crankcase split line surfaces must be free of nicks and foreign matter.*
3. Install other half of crankcase with bearings and evenly tighten crankcase bolts to proper torque. *Do not rotate crankshaft while Plastigage is between bearing and journal.*
4. Remove one half of crankcase. Then measure the width of the flattened Plastigage with the graduated scale on the edge of the Plastigage envelope.
5. If the flattened Plastigage is not over .004" (worn) or .003" (new) or less than .001" the bearing insert is satisfactory. If not within these limits replace bearing insert.
6. A .002" undersize bearing may produce the proper clearance. If not, it will be necessary to regrind the crankshaft journal for use with the next undersize bearing. Bearings are available in undersizes of .001", .002", .010" and .020".
7. Proceed to the next bearing. After all bearings have been checked and installed, rotate the crankshaft to see that there is no excessive drag.
8. Check the end play by forcing the crankshaft to the extreme forward position. End play should be .002" to .006".

OIL PAN REPLACE

Engine In Truck

1. Drain crankcase oil and remove all bolts retaining oil pan to crankcase. Remove pan and discard gasket.
2. Install oil pan and torque retaining bolts to 3½-5 ft. lbs.

OIL PUMP GEARS REPLACE

Engine In Truck

1. Drain crankcase oil.
2. Place a piece of hardwood between oil pan rail and Power Train Cradle (J-7894). Install wood block adjacent to engine skid plate. Installation of wood block will allow easy removal of skid plate.
3. Disconnect engine rear mount and remove engine rear shield seal and center shield. Remove bolts from exhaust air ducts connected to the engine rear center shield plate.
4. Lower engine about 1" to clear rear mount.
5. Remove rear mounting bracket and engine skid plate.
6. Remove oil pump cover and gears.
7. Reverse above procedure to replace parts removed. Torque mounting bracket nuts to 20-30 ft. lbs. and torque rear mounting nut to 40-60 ft. lbs.
8. After completing installation of remaining parts, add engine oil, start engine and check for leaks.

OIL PUMP REPAIRS

Engine Disassembled

1. When assembling the oil pump to the engine rear housing, install the idler gear on the shaft. Idler gear shaft should be .010" to .020" below gasket surface.
2. Place drive gear and shaft in pump housing.
3. Check projection of oil pump gears above gasket surface; this should be .0045" maximum and .0025" minimum. Clearance between gears and housing should be .005".
4. Lubricate pump gears before installation. Install pump cover and tighten bolts.
5. Install a long screwdriver down the

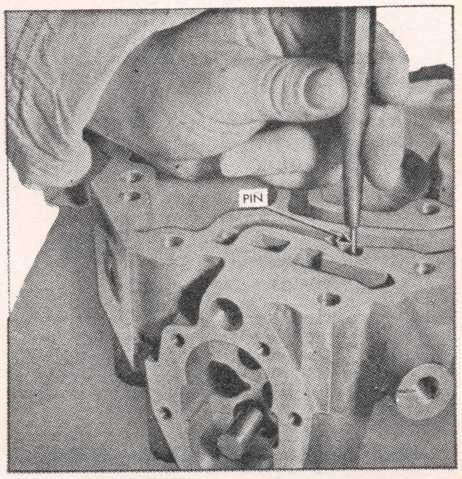

Fig. 28 Installing oil pressure regulator stop groove pin

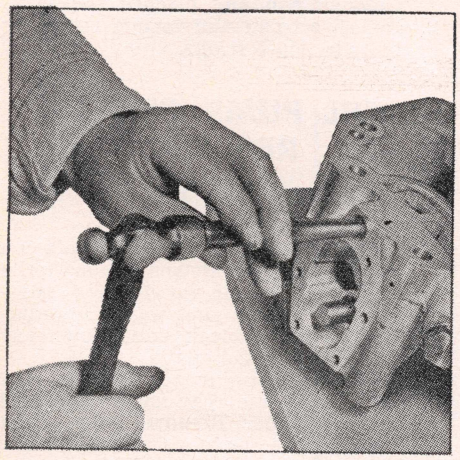

Fig. 29 Installing oil gallery plug

distributor mounting hole in the engine rear housing and turn oil pump drive shaft to see that pump turns freely.

6. Install pressure regulator valve, spring, gasket and plug.

OIL PUMP PRESSURE REGULATOR REPLACE

Engine In Car

1. Drain crankcase oil.
2. Remove right side exhaust air duct.
3. Remove pressure regulator plug, nylon gasket, spring and valve.
4. Install regulator parts, exhaust air duct and crankcase oil. *To check oil pressure, remove plug on top of oil filter and generator adapter, and install an oil pressure gauge. Start engine, check pressure, which should be 35 psi, and check for oil leaks.*

OIL COOLER & BY-PASS VALVES

Engine Disassembled

1. Referring to Fig. 27, remove oil filter by-pass valve by catching the inner edge of the valve with a suitable hook or small screwdriver.
2. Install the new filter valve with the spring *up* in the adapter housing.
3. Remove the oil cooler valve in the same manner as the filter valve. However, the valve spring should be installed *down*.

OIL COOLER, CLEAN

Engine In Truck

Remove the cooler access hole cover (under generator) and brush foreign particles away from oil cooler fins. Insert an air hose gun under the cooler and blow up through cooler fins.

OIL COOLER REPLACE

Engine In Truck

1. Remove screws retaining oil cooler to engine shrouds, shields and cylinder head.
2. Remove cooler access hole cover (beneath generator) and remove long oil cooler mounting bolt and cooler.
3. Remove and discard worn seals from oil cooler adapter.
4. Invert cooler and allow oil to drain. Clean cooler fins with an air hose before and after cleaning in solvent.
5. Reverse above procedure to install. Tighten long retainer bolt 8-12 ft. lbs. Start engine and check for oil leaks around cooler and seal location.

OIL PAN

Engine In Truck

1. Drain crankcase oil.
2. Remove bolts securing oil pan to crankcase.
3. Remove oil pan and discard gasket.
4. Installation is done in reverse order and bolts are tightened to *40-60 inch lbs.*

OIL FILTER & GENERATOR ADAPTER

Engine In Truck

1. To remove, release pulley belt tension at idler pulley and remove blower pulley belt. Disconnect battery ground and generator harness.
2. Remove generator and bracket.
3. Disconnect fuel lines at pump.
4. Remove bolts around oil filler tube; then remove all remaining bolts from adapter.
5. Remove adapter with fuel pump, oil filter and idler pulley as a unit.
6. Remove adapter gasket.
7. Reverse above procedure to install and torque adapter bolts to 7-13 ft. lbs.

CRANKCASE VENT TUBE REPLACE

Engine In Truck

1. Remove engine upper shroud and blower pulley.
2. Remove retaining bolts and remove vent tube.
3. Install a new cork gasket over vent tube end, and insert in crankcase cover.
4. Install vent tube clamp and tighten bolt securely.
5. Install blower pulley and engine upper shroud assembly.

CRANKSHAFT PULLEY & ENGINE REAR HOUSING SEAL REPLACE

Engine In Truck

On some engines the rear housing seal is installed with the flange on the inside, in which case the engine will have to be removed from the car and rear housing removed. If the flange is on the outside, proceed as follows:

1. Drain crankcase oil.
2. Disconnect battery cable to engine.
3. Remove all side shield seal retainers.
4. Remove engine rear center shield.
5. Remove engine skid bolt and attach Power Train Cradle (J-7894) to bottom of engine with car on a hoist.
6. Remove engine rear body grille and engine rear mount.
7. On standard transmission cars remove clutch return spring and disconnect clutch control cable and clutch pull rod.
8. Loosen outboard stud nut and slide it part way out of engine front mounting bracket slot.
9. Remove shift rod coupling.
10. Loosen front mounting nuts and lower engine until nuts are flush with end of studs (do not remove nuts.)
11. Lower engine far enough to remove engine rear mounting bracket.
12. Remove oil filter and pulley belt.
13. Remove crankshaft pulley with a suitable puller. *Install bolts in pulley hub a depth of ¼" only, otherwise the bolts will damage the rear housing seal.*
14. Remove engine rear housing seal by prying on its outer edge with a couple of screwdrivers. *The lips of seal are packed with high melting cup grease for the life of the seal.*
15. Reverse above procedure to install parts removed. Add engine oil, start engine and check for oil leaks.

ENGINE REAR HOUSING

Engine Disassembled

When replacing the engine rear housing as a new unit, the following operations are required.

1. Install groove pin, Fig 28, which holds oil pump pressure regulator valve in place.
2. Install oil pump gallery plug flush with counterbore, using sealing compound, Fig. 29.
3. Install new rear housing seal.
4. Install distributor holding stud 1⅛" measured from distributor pad on engine rear housing.

FLYWHEEL HOUSING SEAL

Engine Disassembled

1. Tap seal out of housing with a wood or fibre drift.
2. Clean flywheel housing seal surface with solvent and check surface for nicks or damage.
3. Lubricate outer seal surface (beaded area) with lubriplate or petrolatum and install with a suitable driver. *If seal is removed and still usable, pack sealing lips with a good grade of cup grease with a high melting point (350°). New seals are packed with this type grease to last the life of the seal.*

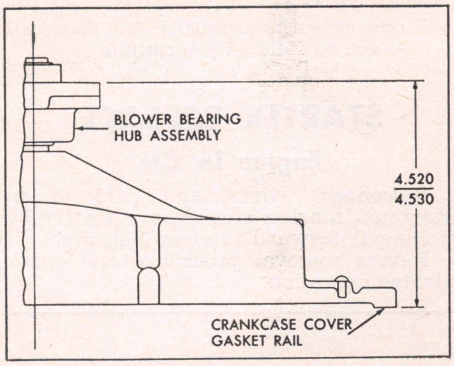

Fig. 30 Blower bearing and crankcase cover assembly

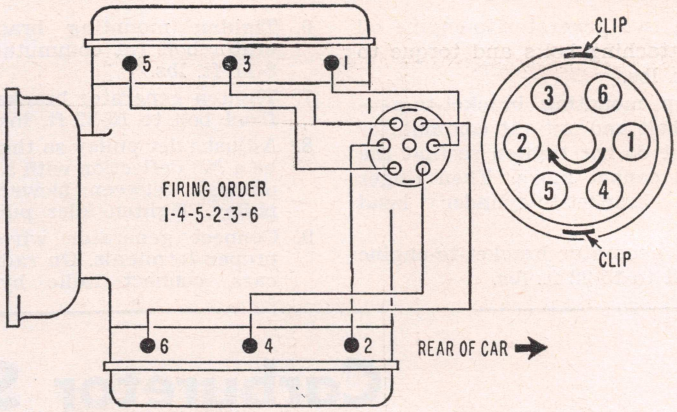

Fig. 32 Ignition wiring

BLOWER BEARING, BLOWER & CRANKCASE COVER

Engine In Truck

1. Disconnect battery ground cable.
2. Disconnect accelerator linkage and fuel lines.
3. Remove oil level gauge and fresh air choke at air cleaner. Remove choke pipe.
4. Remove air cleaner, air horn and support.
5. Remove carburetor vacuum balance tube and retaining strap at engine upper shroud.
6. Remove pulley belt and distributor wire harness.
7. Disconnect cooling air throttle valve lever swivel.
8. Remove engine upper shroud and thermostat rod as a unit. An alternate method is to remove the lower left shroud and remove clip from thermostat rod; then remove thermostat rod from engine upper shroud.
9. Remove blower pulley and blower (4 bolts) from blower bearing hub assembly.
10. Remove crankcase cover bolts and washers.
11. Remove crankcase - to - crankcase vent gasket and crankcase vent.

Blower Bearing Replace

1. While supporting crankcase cover, press blower bearing shaft out of blower.
2. Install new blower bearing hub assembly in crankcase cover, using hypoid lubricant on bearing shaft.
3. Press on shaft of blower bearing to a height shown in Fig. 30. *Do not press on bearing outer or inner race.*

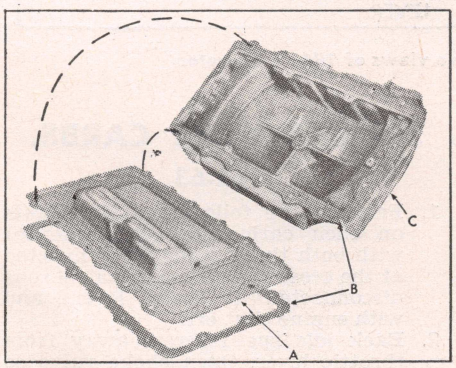

Fig. 31 Crankcase cover (C), vent (A) and gaskets (B)

Installation of Blower

1. Assemble crankcase cover, vent and gaskets as shown in Fig. 31.
2. Install blower and pulley bolts and torque to 20-25 ft. lbs.
3. Install engine upper shroud fuel lines and cooling air throttle valve assembly and tighten all retaining bolts. *When tightening upper shroud bolts, turn blower several times to make sure blower edge does not rub against upper shroud.*
4. Install remaining parts in the reverse order of removal.

BLOWER BEARING REPLACE

Crankcase Cover Removed

1. While supporting crankcase cover press blower shaft out of cover.
2. Install a new blower bearing hub in cover, using hypoid lubricant on bearing shaft.
3. Press on shaft of blower bearing and press assembly in place to a height of $4\frac{15}{32}$" to $4\frac{31}{64}$" parallel to cover gasket rails. Do not press on bearing inner or outer race.

DISTRIBUTOR REPLACE

Engine In Trucks

To remove distributor, disconnect primary wire from coil. Remove distributor cap and vacuum line from distributor. Mark position of rotor arm on housing so that distributor may be reinstalled in same position. Unfasten and remove distributor from engine.

If necessary to remove secondary leads from distributor cap, mark position on cap tower for lead to No. 1 cylinder or see Fig. 32.

When installing distributor, turn rotor about ⅛ turn counterclockwise past the mark previously placed on distributor housing. Push distributor down into position in block with housing in normal installed position. It may be necessary to move the rotor slightly to start gear into mesh with camshaft gear but rotor should line up with mark when distributor is down in place. Fasten distributor in place and check ignition timing.

IGNITION TIMING

If a timing light is to be used to set ignition timing, disconnect the vacuum advance pipe to the carburetor and place a piece of tape over open end of pipe. *This is important as carburetor trouble can affect timing adjustments.*

Lacking a power timing light, an accurate method of setting ignition timing with the engine stopped is with the aid of a jumper light. Be sure to use a light bulb that corresponds with the system voltage of the vehicle.

1. Remove distributor cap and rotor and see that the breaker gap is set according to specifications.
2. Rotate engine until No. 1 cylinder is at the ignition timing point as indicated by the timing pointer and timing mark being lined up with each other.
3. Connect the jumper light between distributor ignition terminal and ground.
4. Turn on ignition switch.
5. Loosen distributor and turn it in the direction of normal rotation until the points just close (light out). Then slowly turn distributor in the opposite direction just to the exact point that the light goes on. Tighten distributor in this position.

GENERATOR REPLACE

Engine In Car

Disconnect ground cable from battery, and wires from generator terminals. Remove drive belt, three attaching bolts and remove generator from engine.

Installation

1. Place generator in position and install bracket, leaving nuts loose.
2. Place blower belt over generator pulley but do not tighten idler bracket at this time.

3. Tighten two generator-to-engine oil filter attaching bolts and torque to 15-22 ft. lbs.
4. Snug up mounting bracket-to-generator bolt and nut (at commutator end) but do not tighten so that the bracket cannot move. Then finger tighten bracket-to-cylinder head bolts.
5. Tighten generator bracket-to-engine rear bolt to 15-22 ft. lbs.
6. Tighten mounting bracket-to-generator bolt (at commutator end) to 8-11 ft. lbs.
7. Tighten generator bracket-to-engine front bolt to 15-22 ft. lbs.
8. Adjust idler pulley so that there will be a ⅜" deflection with a 15 lb. push midway between blower and idler pulley. Tighten idler pulley.
9. Connect generator wires to their proper terminals. On radio equipped cars, connect radio by-pass condenser to the armature (A) terminal —not to field (F) terminal.

STARTER REPLACE

Engine In Car

Disconnect wires and cable from starter. Unfasten and remove starter by pulling it forward to clear housing.

Revese removal procedure and check starter operation.

Carburetor Section

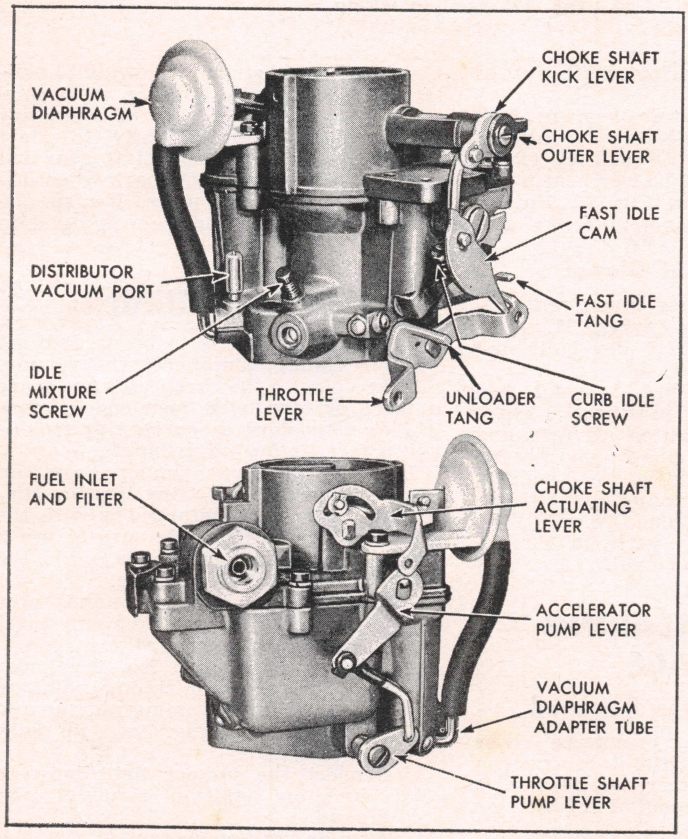

Fig. 1 Exterior views of 1962-63 carburetor

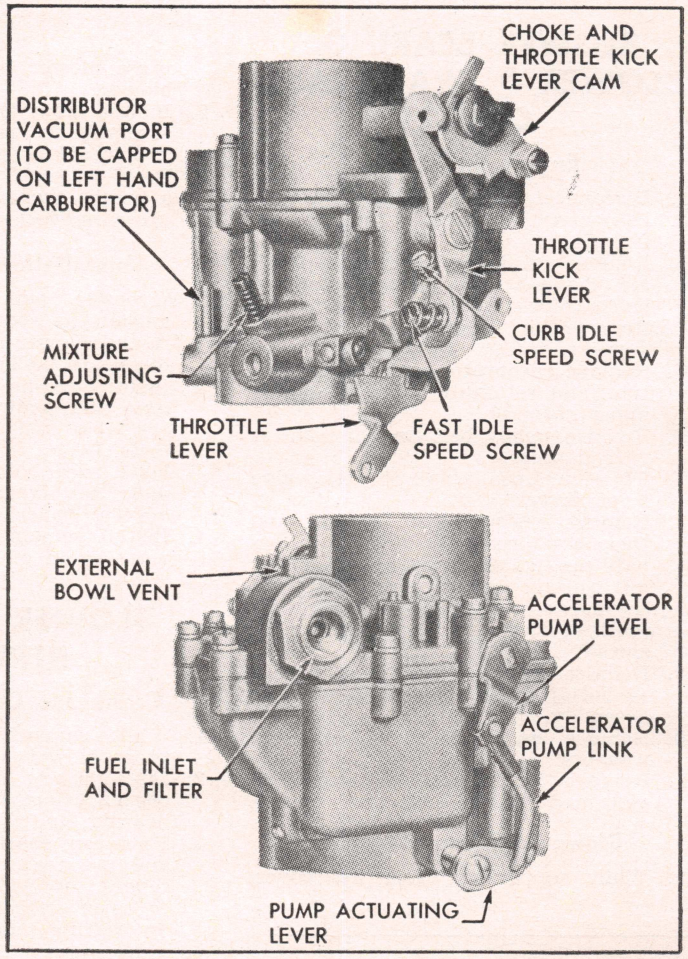

Fig. 2 Two views of 1961 carburetor

CARBURETORS

1962-63

These engines use two identical automatic choke, single barrel carburetors, Fig. 1, one located on each intake manifold. Each carburetor is separated from the manifold by an insulator block.

The automatic choke mechanism consists of a thermostat control coil mounted to the lower side of the cylinder head and linked directly to the carburetor choke valve shaft. A vacuum diaphragm, mounted on the carburetor air horn, replaces the conventional choke vacuum piston, to provide the start and run position of the choke valve. A fast idle cam is provided to control engine speed during warm-up.

1961

The Corvair engine uses two identical Rochester Model "H" manual choke, single-barrel carburetors, Fig. 2. Each carburetor is separated from the engine manifold by an insulator block. The two carburetor thottle shaft levers are connected by a cross shaft which is actuated by the accelerator linkage. Careful adjustment must be made to insure that the carburetors are properly synchronized. An oval air duct runs laterally across the forward engine compartment connecting two air cleaners, one at each carburetor.

SYNCHRONIZE CARBS.

1962-63

1. Perform the following adjustments on each carburetor (in sequence) with both throttle rods disconnected at the cross shaft, choke control rods disconnected at choke levers and with engine shut off.
2. Back idle speed screw away from throttle lever. Open choke valve so throttle lever does not ride fast idle cam. Place a .003" feeler gauge between idle speed screw and throttle lever. Turn screw in until it just

contacts gauge and then continue for 1½ turns more to set throttle valve.

3. Turn idle mixture screw lightly to its seat and back out 1½ turns.
4. Connect throttle rod to right-hand carburetor cross shaft lever, using clip.
5. To connect left carburetor, rotate cross shaft (with accelerator rod) to insure positive closing of right carburetor throttle valve. Adjust throttle rod length in swivel until rod freely enters hole on carburetor cross shaft lever. Then shorten rod one more turn in swivel. Secure rod with clip. *It may be necessary to hold choke valve open so fast idle cam is clear of throttle lever.*
6. The carburetors are now mechanically synchronized. Any further idle speed or mixture adjustment must be duplicated on both carburetors.

1961

1. Detach and lift off air cleaner and air hoses as a unit.
2. Disconnect throttle rods from each carburetor.
3. Fully back off each idle speed screw on each carburetor so that each throttle valve is fully closed.
4. Place a .003" feeler between idle speed screw and throttle lever. Turn screw down until it just holds gauge. Remove gauge and turn screw one complete turn more. Perform this operation on each carburetor.
5. Reconnect the throttle rod to the right carburetor and the throttle rod swivel to the left-hand cross shaft lever. Be sure the left-hand cross shaft lever is turned fully clockwise to insure that the right hand carburetor throttle valve is fully closed. Lifting up on the left-hand carburetor throttle rod, adjust the swivel at the top of the rod so that it freely enters the hold in the cross shaft lever.
6. The two carburetors are now synchronized. Any further curb idle speed screw adjustment must be duplicated on both carburetors.

Positive Crankcase Ventilation

When there is a complaint of carburetor troubles and the car is equipped with a Positive Crankcase Ventilator Unit, it is advisable first to check the operation of this unit before servicing the carburetor. For data on this unit, see the *Tune Up Chapter*.

ROCHESTER CARBURETOR ADJUSTMENTS

★See Tune Up Chart for hot idle speed.

Year	Carburetor Model	Idle Adjustments★			Float Level	Float Drop	Vacuum Diaphragm Adjust	Unloader Setting	Pump Rod Setting	Choke Setting
		Mixture Screws Turns Open	Fast Idle Speed	Dashpot Plunger Clearance						
1963	H-7023100	1½	.078⑥	None	13/64①	1¾②	11/64⑦	¼④	③	⑧
	H-7023101	1½	.078⑥	None	13/64①	1¾②	11/64⑦	¼④	③	⑧
1962	H-7020100	1½	.078⑥	None	13/64①	1¾②	5/32⑦	¼④	③	⑧
	H-7020101	1½	.078⑥	None	13/64①	1¾②	5/32⑦	¼④	③	⑧
1961	H-7019100	1½	⑤	None	13/64①	1¾②	None	None	③	None
	H-7019101	1½	⑤	None	13/64①	1¾②	None	None	③	None
	H-7019107	1½	⑤	None	13/64①	1¾②	None	None	③	None

ROCHESTER NOTES

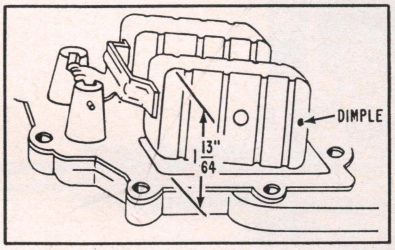

Fig. ①—Float level. If float has no dimple, take measurement from center of float.

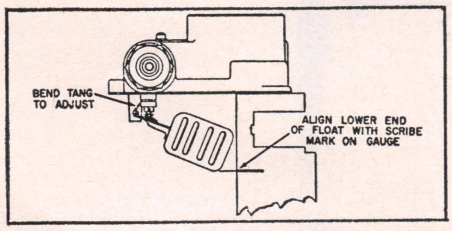

Fig. ②—Float drop.

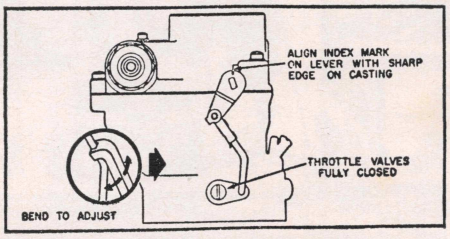

Fig. ③—With throttle valves completely closed, bend pump rod as shown until index line on upper pump lever just aligns with sharp edge of air horn casting.

④—With throttle valves wide open there should be the clearance listed between top of choke valve and adjacent wall of air horn. To adjust, bend unloader tang.

⑤—With choke wide open, clearance between fast idle screw and pad (tang) on throttle lever should be .015" (.010" on 1960) on manual transmission and .030" on automatic transmission jobs. Adjust fast idle screw as required.

⑥—With engine stopped and throttle lever on second highest step of fast idle cam, bend tang to obtain the clearance listed between idle speed screw and throttle lever.

⑦—Hold vacuum diaphragm arm in against diaphragm. Clearance between lower edge of choke valve and wall of air horn should be as listed. If necessary to adjust bend diaphragm link. After this setting, throttle lever fast idle tang should rest on second highest step of fast idle cam. If not, adjust by bending outer choke shaft lever tang.

⑧—With choke control rod disconnected, hold choke valve closed. While holding control rod against stop in choke thermostat bracket, adjust upper choke control rod until it freely enters hole in choke shaft lever. Always turn vertical portion (not offset portion) of control rod. After engine warm-up, choke valve should be open and fast idle cam should clear throttle lever.

Clutch and Manual Shift Transmissions

CLUTCH LINKAGE

1. Refer to Fig. 1. First be sure the pedal has at least ¾" travel before clutch release bearing engages clutch diaphragm springs.
2. Disconnect rear clutch return spring.
3. Remove rear cable clevis.
4. Allow clutch fork pull rod lever to hang free.
5. Pull rearward on cable clevis to insure that all slack is removed from that point forward.
6. Manually pull clutch fork pull rod until slack is taken up at clutch fork.
7. Adjust pull rod clevis to align holes in both clevis.
8. Unscrew clevis 3½ turns, lengthening rod by $\frac{5}{32}$".
9. Tighten pull rod clevis jam nut. Line up holes in cable clevis, pull rod clevis and clutch fork pull rod

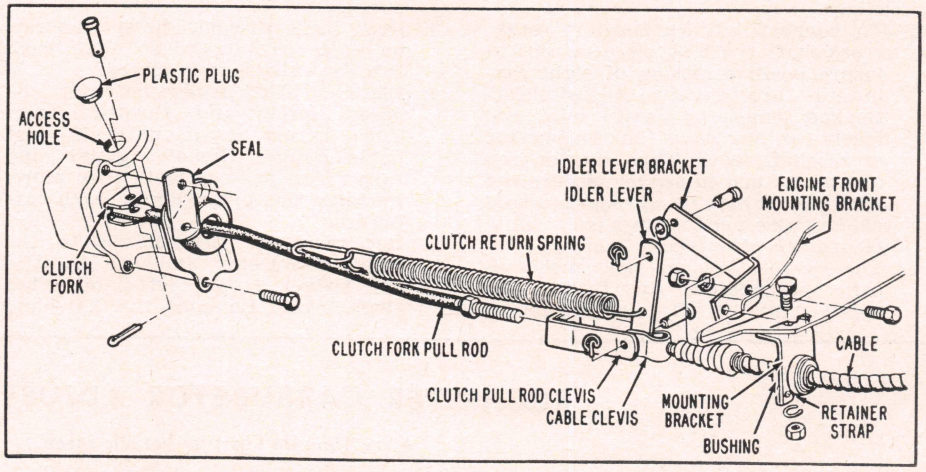

Fig. 1 Clutch linkage

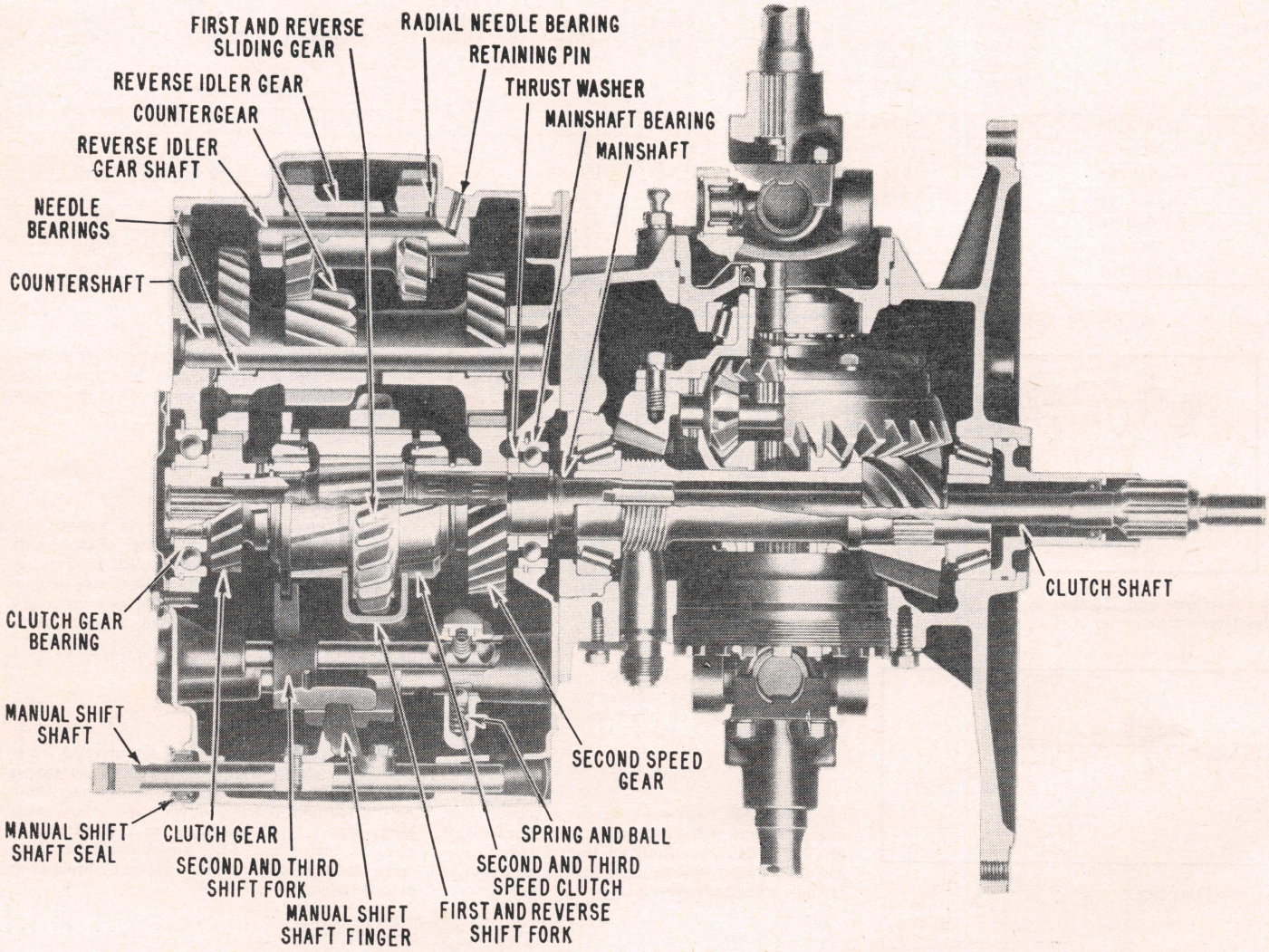

Fig. 2 Three speed transaxle (transmission and axle)

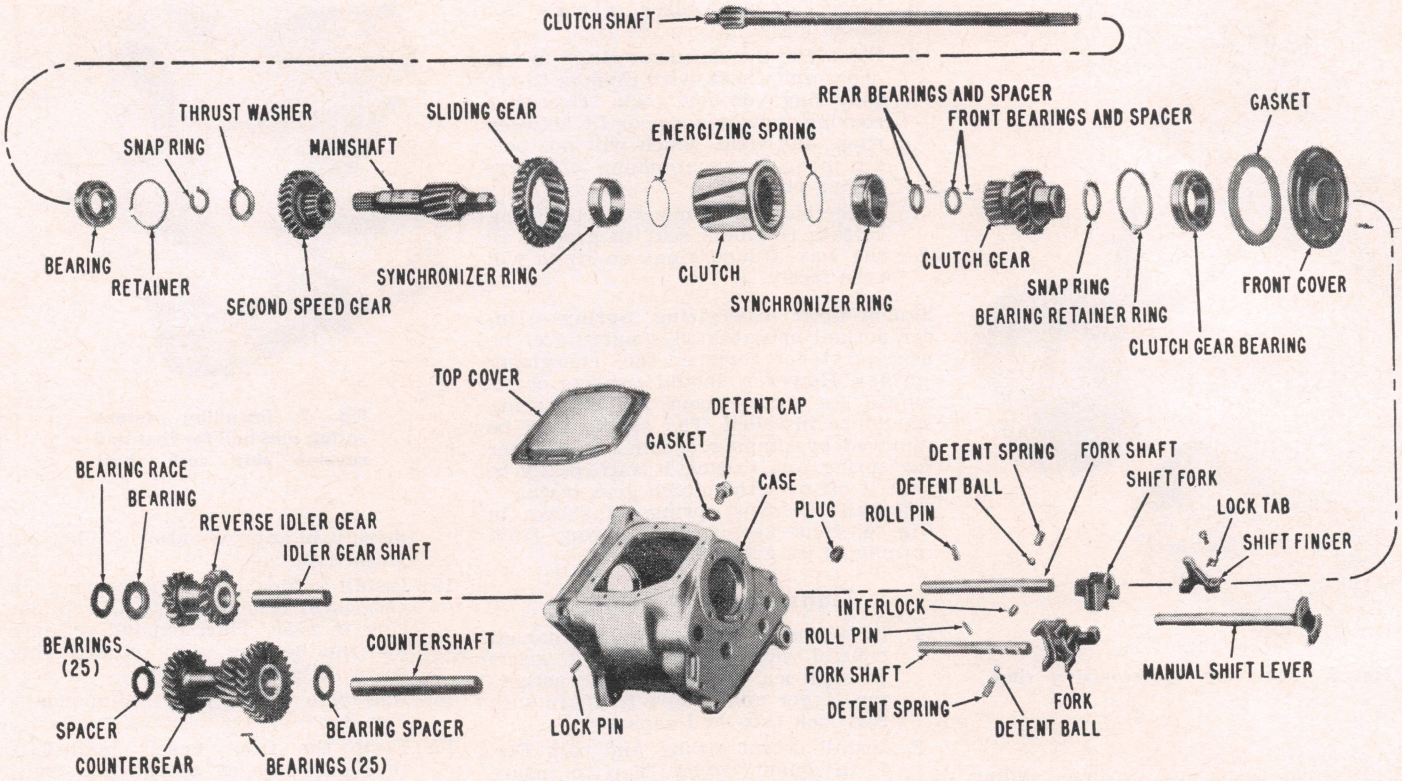

Fig. 3 Manual shift three speed transmission

lever. Insert clevis pin and retainer clip.

10. Install clutch return spring.

CLUTCH REPLACE

1. Remove engine, axle and transmission from the car and separate the axle and transmission from the engine as outlined in the *Power Train Section.*
2. The clutch fork, ball stud and clutch release bearing are removed with the axle housing.
3. Disconnect clutch fork from ball stud and remove clutch release bearing from shaft.
4. Remove 6 clutch attaching bolts, one turn at a time, until clutch spring pressure is released. Then remove clutch from engine.
5. Reverse above procedure to install the clutch, being sure the cushion springs of the clutch disc are located on the flywheel side of the driven plate hub.

MANUAL TRANSMISSION

In essence the Corvair transmission is a conventional synchromesh type except for the use of concentric input and output shafts and its mounting on the differential carrier, Fig. 2.

Because of its mounting on the differential carrier, the mainshaft is hollow to permit the passage of the clutch shaft to the front of the transmission to the clutch gear. The clutch gear drives the counter gear and the remaining power flow sequence is identical to the conventional three speed transmission.

Transmission Replace

Instructions for the removal of the power train from the vehicle and the separation of the transmission from the power train are provided in the *Power Train Section.*

Transmission Disassemble

1. Remove front cover plate and clutch gear bearing snap ring, Fig. 3.
2. Remove clutch gear and bearing (special puller J-8136).
3. Remove top cover.

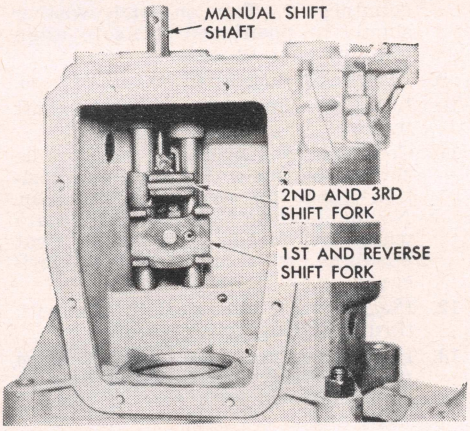

Fig. 4 Shift forks installed

4. Remove snap ring from mainshaft groove.
5. Drive or press mainshaft out of transmission.
6. Remove mainshaft parts by lifting out through top of case.
7. Expand snap ring and remove mainshaft rear bearing.
8. Drive countershaft out from hole in front of case, being sure to account for 25 needle rollers at each end.
9. Drive reverse idler shaft lock pin into the shaft; then drive the shaft out of the case through the hole at the rear of the case. The plug at the front of the case will be driven out by the shaft.
10. Remove detent cover and remove shift forks if necessary, Fig. 4.

Transmission Repairs

Reverse Idler Gear Bushings—Because of the high degree of accuracy to which these parts are machined, the bushings are not serviced separately. Check bushings for excessive wear by using a narrow feeler gauge between shaft and bushing. Proper clearance is from .002" to .004".

Countergear Needle Bearing—If wear is indicated on these bearings, they should all be replaced as well as the countershaft.

Clutch Gear Bearing—As the clutch gear bearing is removed as a unit, it will be necessary to drive the clutch gear out of the bearing if replacement of either the gear or bearing is required.

Clutch Sleeve and Synchronizer Rings—

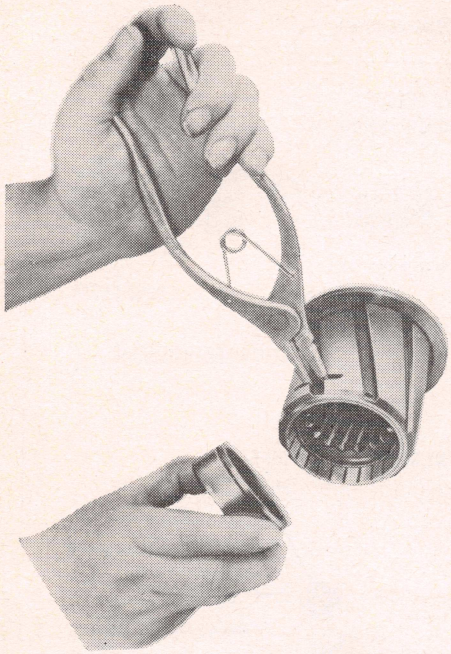

Fig. 5 Removing synchronizing ring

1. Remove first and reverse sliding gear.
2. Turn synchronizer ring in clutch sleeve until ends of ring retainer can be seen through slot in clutch sleeve.
3. Expand retainer into counterbore in clutch sleeve, Fig. 5. This raises retainer from groove in ring so ring may be slipped out.
4. Check synchronizer cones for wear or for being loose in clutch sleeve. If cones are damaged in any way, it will be necessary to replace the clutch sleeve and both synchronizer rings. Clutch sleeve should be replaced if there is more than .030″ end play between cone and snap ring.

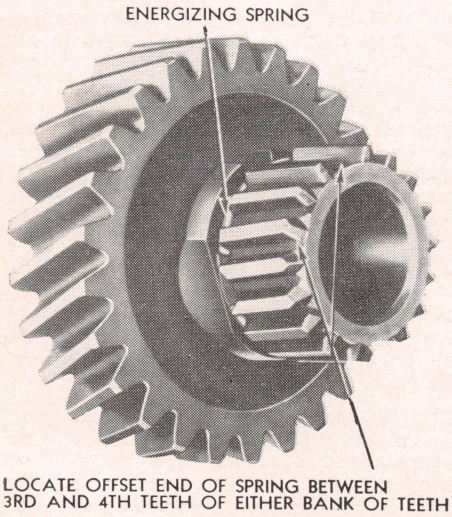

Fig. 6 Position of energizing spring

5. Inspect synchronizer rings for smoothness.
6. Place the synchronizer rings in the cones and check with thumbs to see that rings do not rock. Excessive rocking indicates a poor fit between rings and cone, which will not permit proper synchronizing of gears during shifting.
7. Assemble synchronizer parts, being certain retainers seat in groove all the way around rings so rings will turn freely.

Synchronizer Energizing Springs—Under normal operation it should never be necessary to replace the energizing springs. However, should a spring be removed for any reason, a new spring should be installed. The spring may be removed by slipping a thin blade under the spring and raising it sufficiently to slide it off over the clutch gear teeth.

Install the new spring as shown in Fig. 6, thus keeping the spring from turning in its groove.

Transmission Assemble

1. Referring to Fig. 3, lubricate manual control shaft with oil and insert through seal in case. Position actuating finger and secure to shaft with two lock tabs and capscrews.
2. Install detent spring and ball, Fig. 7, in detent cavity. Tap to insure spring is resting on bottom of cavity.
3. Insert first and reverse shift fork through case, slip fork on shaft and secure fork to shaft with roll pin.
4. Insert interlock in detent cavity.
5. Insert second and third fork shaft through case and slip fork onto shaft. Twist shaft so its interlock groove is 90 degrees from the interlock; then fully insert shaft and twist shaft so interlock notch is engaged by interlock. Secure shift fork to shaft with roll pin.
6. Insert detent ball and spring for second and third shift fork, and install detent cavity cover and gasket.
7. Place some cup grease in roller bearing area of each end of countergear and install 25 rollers in each end. Grease will hold rollers in place while installing.
8. Apply grease to bearing thrust washers and countergear thrust washer and place one at each end of countergear. Tab on each washer should be positioned so as to align with notches in case.
9. Insert countergear in bottom of case.
10. Lubricate and insert countershaft in case.
11. Coat thrust washer and needle thrust bearing with grease and position them on reverse idler gear. Needle bearing against end (rear) with chamfered gear teeth. Coat bushings with transmission lubricant.
12. Place reverse idler gear in case with thrust bearing toward rear.
13. Install reverse idler shaft from rear, making sure lock pin hole in shaft lines up with hole in case at same angle.
14. Use new idler shaft lock pin and drive it in approximately $\frac{1}{16}$″ beyond flush with case.

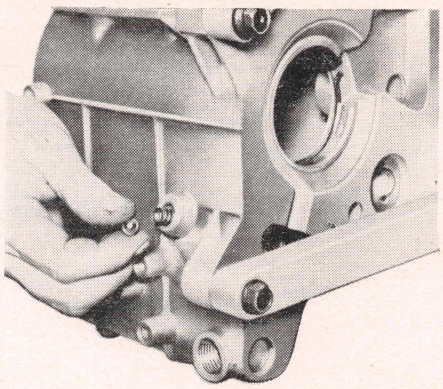

Fig. 7 Installing detent spring and ball for first and reverse shift fork shaft

15. Install mainshaft rear bearing in case until bearing contacts retainer ring in case. Then expand retainer and tap bearing until retainer ring seats in bearing groove.
16. Assemble mainshaft components, Fig. 8.
17. From the front, insert mainshaft through bores of second and third speed clutch and second speed gear; then install thrust washer on mainshaft with oil grooves toward gear.
18. Tap front of mainshaft until ring groove is accessible behind rear bearing and install snap ring. Check fit of snap ring by inserting feeler between snap ring and bearing inner race. End clearance must be .004″ maximum. Thrust washers are available in four thicknesses ranging from .086″ to .097″.
19. Place some cup grease in mainshaft pilot hole of clutch gear and install roller bearings and small spacer. Then install large spacer and remaining roller bearings.
20. Align synchronizer lands with clutch gear blank teeth.
21. Tap clutch gear bearing into case. Open retainer ring and fully seat bearing as indicated by seating of retainer ring in bearing groove.
22. Install front cover plate and gasket.
23. Install top cover and gasket.
24. Install expansion plugs in case openings at rear of manual shift shaft and reverse idler gear.

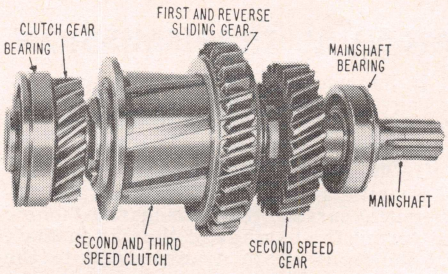

Fig. 8 Mainshaft assembly

Powerglide Section

DESCRIPTION

The Corvair Powerglide transmission, Fig. 1, consists of an air-cooled, three element torque converter which drives through an automatic, two-speed planetary transmission.

As shown, the transmission is integrated to the differential carrier to form a Transaxle. As a result, the converter is remote from the main transmission, being separated by the differential carrier. Two shafts run axially through the hollow pinion shaft; one from the converter cover hub to the front pump and the other from the turbine to the input sun gear to transmit converter torque to the transmission gear box.

Excepting the converter location, mechanical components of the Corvair Powerglide are generally scaled-down versions of comparable parts in the conventional Powerglides used on Chevrolet cars. The use of a plate-type reverse clutch and a welded converter with integral starter driven gear are obvious exceptions.

MAINTENANCE & ADJUSTMENTS

Adding Oil

Oil level should be checked every 1000 miles. Oil should be added only when the level is near the "ADD" mark on the dipstick with oil at normal operating temperature. The oil level dipstick is located in the right front of the engine compartment. *The difference in oil level between "FULL" and "ADD" is one pint.*

To check oil level accurately, the engine should be idled with the transmission oil at normal operating temperature and the control lever in Neutral position. Oil level should be maintained no higher than the "FULL" mark on the dipstick. Do not overfill as foaming and aerating of the oil will result because the planetary unit will be running in oil, causing improper application of the band or clutches.

Draining and Refilling

No periodic draining of the transmission oil is recommended.

When the transmission requires repairs, drain the oil by loosening the filler tube attaching nut in the oil pan and allow the oil to drain (no drain plug is provided).

To refill the transmission, tighten the filler tube nut and add 4 pints of transmission fluid, using a suitable filler tube and funnel. Start engine and allow it to idle in Neutral for 3 to 5 minutes to warm the transmission fluid. Then add oil as required to bring the level to the "FULL" mark on the dipstick. Assuming that the converter was not drained (since it is welded) and allowing for nominal spillage or draindown, approximately 6 pints are required for a refill.

SHIFT LINKAGE

Check Operation

If improper shift linkage adjustment is suspected, a check can be made

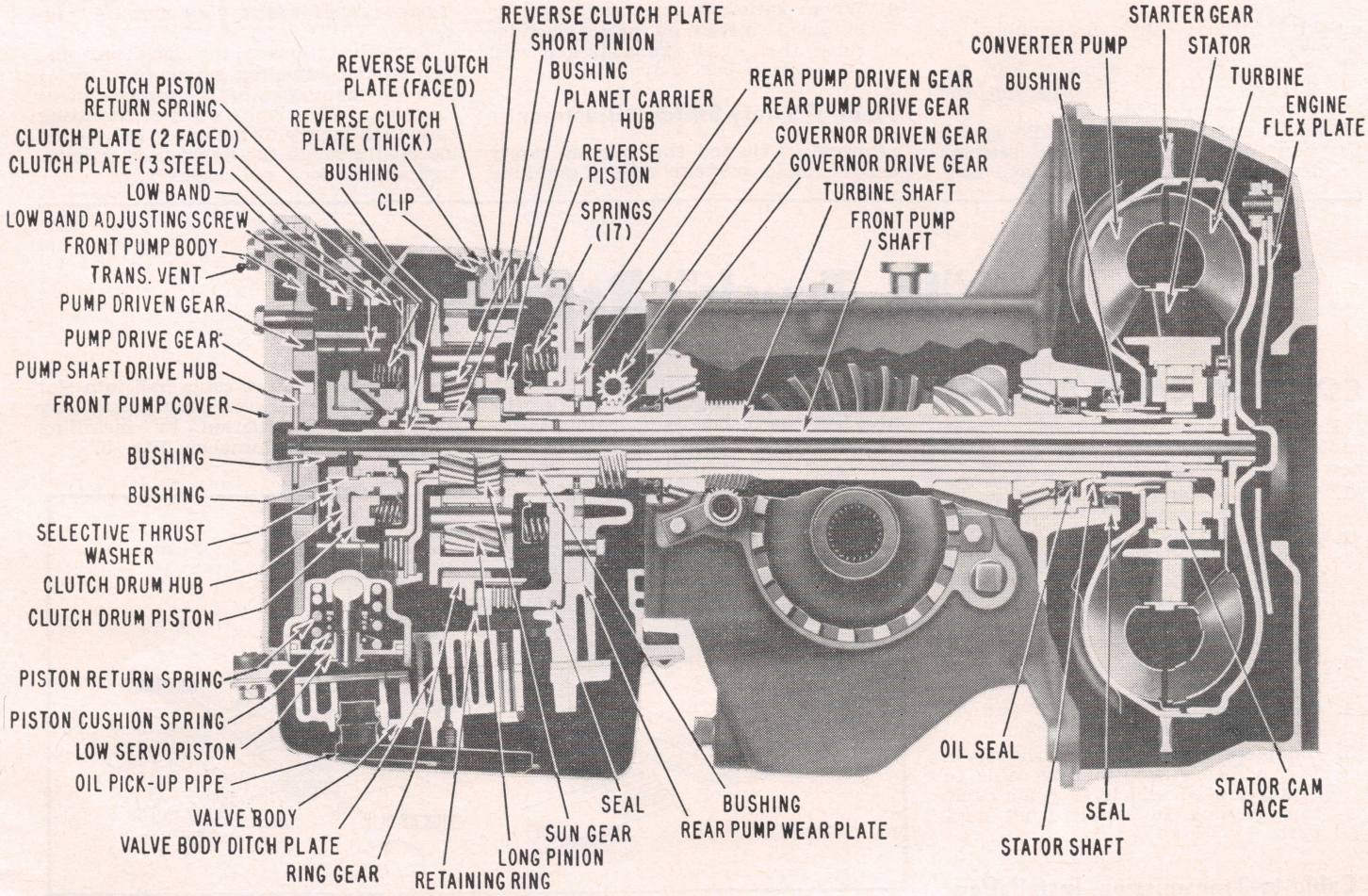

Fig. 1 Corvair Powerglide

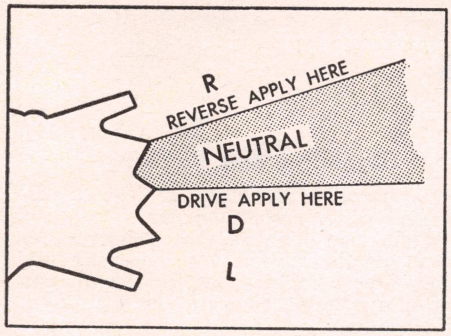

Fig. 2 Shift linkage check diagram

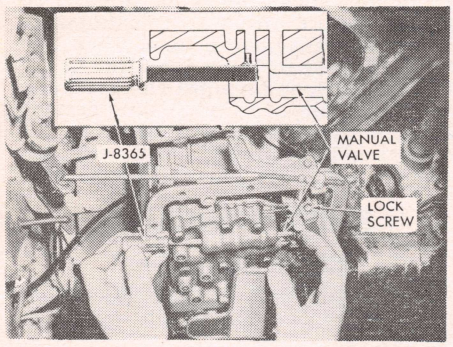

Fig. 3 Adjusting manual valve linkage

quickly without any disassembly as follows:

1. Start engine and allow to run for 2 to 3 minutes to warm up the transmission fluid.
2. With engine at normal idle speed, very slowly move range selector lever up from "N" to"R" and note by feel the point at which the reverse clutch applies. Properly adjusted, the reverse clutch should apply at the peak of the tooth separating Neutral and Reverse detents, Fig. 2.
3. Make the same check as in Step 2 while moving the selector lever from "N" toward "D". Properly adjusted, the low band should apply as the selector lever follower is felt to be at the tooth peak separating Neutral from Drive and full Drive detent.
4. Unless the shifts are obtained at the points illustrated, the shift linkage should be adjusted with Gauge J-8365, Fig. 3.

Adjustment

1. Drain oil and remove oil pan.
2. Place selector lever in "D".
3. Insert Gauge J-8365 into manual valve bore as shown in Fig. 3 with tab of gauge upward so it engages to forward port of valve body as shown in inset.
4. With gauge in place, push forward on manual valve levers. Properly adjusted, the gauge will be held in place horizontally without being supported.
5. If readjustment is required, loosen lock screw and push manual valve levers forward so that gauge is held in this attitude. Recheck adjustment as in Step 4.
6. When satisfactory adjustment is obtained, install oil pan and filler tube; then refill transmission with oil as described above.

Neutral Safety Switch Adjustment

Properly adjusted the neutral safety switch should prevent engine cranking when the ignition switch is turned to "Start" with the selector lever in any position other than "N".

To adjust, loosen switch mounting screws and place range selector lever in "N". Push switch in a direction towards front of vehicle as far as possible to extend plunger. Insert gauge (.680-685") between end of plunger and switch; then move switch tightly against gauge and plunger and tighten two attaching screws while holding in this position. *A gauge* 1" x 13/32"x.680-.685" *can be made from steel stock.*

Throttle Valve Linkage

As special linkage is not used to actuate the transmission throttle valve, refer to the carburetor portion of the *Engine Section* for adjustment procedure.

Low Band Adjustment

As no periodic adjustment of the low band is recommended, access to the adjusting screw has been provided from inside the vehicle via the parcel compartment area behind the rear seat.

To gain access to the low band, remove the parcel shelf and the plug covering the access hole in the floor pan.

Adjustment of the low band requires an improvised tubular hex ¾" socket approximately 4½" to 6" long. Probably the simplest way to fabricate this tool would be to weld two ¾" tubular stamped steel spark plug wrenches together.

To adjust, loosen the lock nut and tighten the adjusting screw *to 35 to 45 inch lbs., then back off 4 complete turns exactly.* While holding the adjusting screw stationary by means of the socket, inserted through the improvised wrench, tighten the lock nut securely.

"In Truck" Repairs

CONTROL CABLE REPLACE

Remove tunnel covers and detach cable as suggested by Fig. 4. Install new cable as follows:

1. Lay cable out beneath car in its correct relationship.
2. Insert cable up into passenger compartment. Cable must then be routed *under* parking brake cable and then *over* parking brake pipe to prevent possibility of brake cable riding against shift cable.
3. Connect shift cable to range selector.
4. Shift range selector to "D" and secure cable to base of toe-pan.
5. Complete installation as shown in Fig. 4, being sure to bow cable to center line of vehicle to guide cable through hole in engine front support.

Cable-to-Transmission Installation

Install O-ring seal on cable, having lubricated it with Lupriplate. With throttle rods disconnected from throttle valve lever on transmission, rotate throttle valve lever its full limit counterclockwise and insert cable ball into slot of manual valve lever. Fully seat O-ring and secure installation by installing capscrew and lockwasher, Fig. 5.

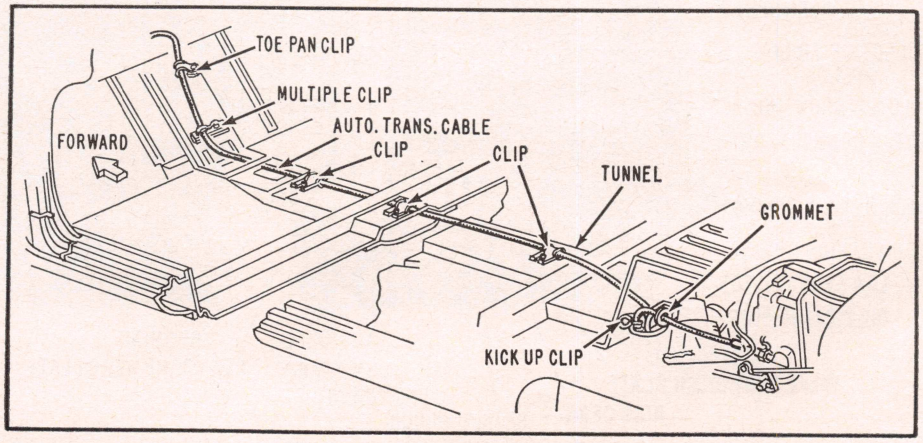

Fig. 4 Shift control cable routing

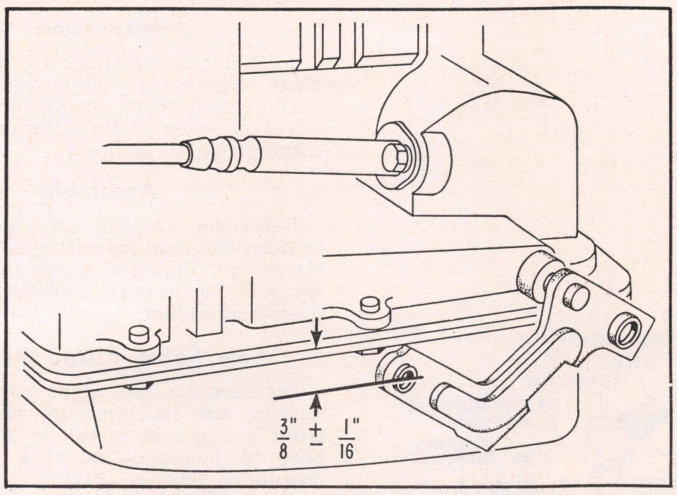

Fig. 6 Cable installation check diagram

Checking Installation, Fig. 6—Once fully tightened, exert a slight hand pressure in the counterclockwise direction and check that the hole in the notched arm of the throttle valve lever is *below* the transmission oil pan rail the dimension indicated by the arrows, Fig. 6 (3/8" plus or minus 1/16"). If hole is above pan rail, cable installation is faulty and must be rechecked.

VACUUM MODULATOR

The vacuum modulator is mounted on the right side of the transmission and can be serviced from beneath the vehicle. Disconnect the vacuum hose and unscrew the modulator from the transmission with channel lock pliers or a thin one-inch wrench.

The vacuum modulator can be checked with a vacuum source for leakage. However, leakage normally results in transmission oil pull-over and results in oil smoky exhaust and continually low transmission oil level. No repairs are possible on the modulator; replace with new unit.

When installing, center the gasket in place with vaseline and hold it centered during installation to prevent an external oil leak.

GOVERNOR

Governor is accessible from beneath the vehicle and is mounted on the left side of the transmission. To remove, unscrew lock screw and pull the unit out of the transmission.

The only part replaceable is the driven gear. Drive out the roll pin with a punch and pull out the gear. Drill a new hole in the governor 90 degrees from the original; then insert a new gear and roll pin.

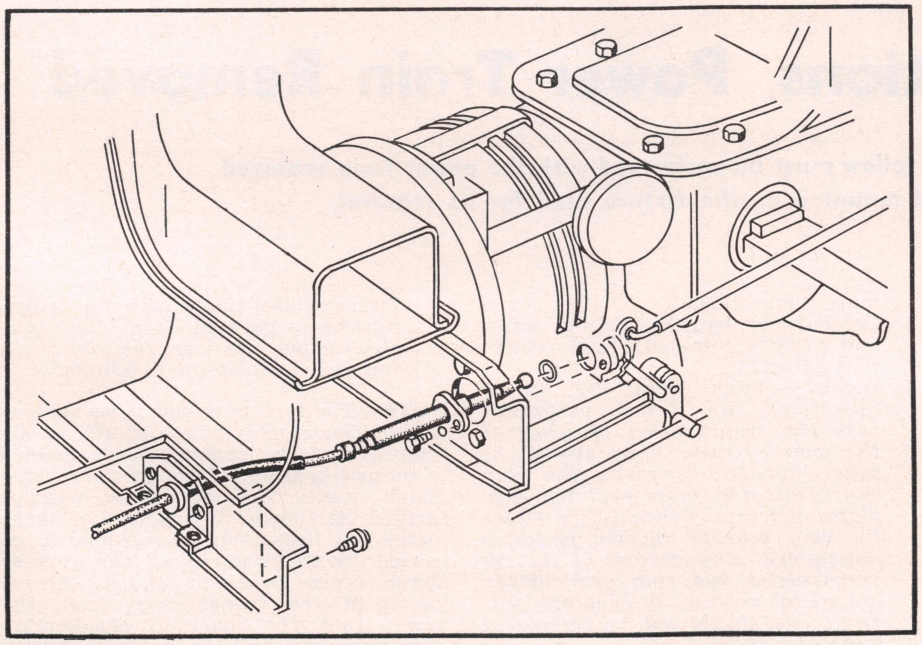

Fig. 5 Case-to-cable installation

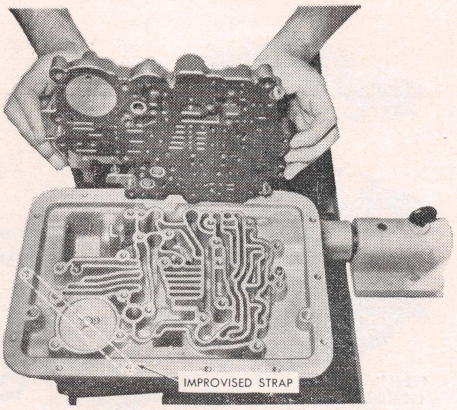

Fig. 7 Removing valve body

When installing, use a new O-ring seal on the governor. Then insert the governor in the transmission with a slight twist to engage the gear teeth.

VALVE BODY & LOW SERVO

Removal

1. Drain oil pan and disconnect throttle valve rods from TV lever on transmission.
2. Remove oil pan and oil pick-up pipe.
3. Make an improvised sheet metal strap, Fig. 7, and loosely install with one pan bolt.
4. Remove bolts securing valve body to transmission, tap valve body lightly with a soft hammer to loosen from its dowels in transmission case, then carefully lower the valve body about 1/16", rotate improvised strap into place so it spans the servo piston hub and secure strap with pan bolt. This eliminates possibility of servo piston slipping down out of its bore and the loss of low band engagement with its apply components.
5. To remove the low servo piston, pull downward on the hub of the piston shaft with a screwdriver. *Do not remove piston in vehicle unless low band screw is first tightened fully.*

Valve Body Repairs

Referring to Fig. 8, disassemble valve body as follows:

1. If installed, remove manual valve.
2. Remove screws and separate modulator valve body from main valve body. *Modulator body should be held during removal of screws as it is under spring pressure from the pressure regulator valve spring.*
3. Remove pressure regulator valve spring retainer, spring, and pressure regulator valve.
4. From the modulator body, remove rear pump priming ball and the front and rear pump check valves and springs. Also remove modulator valve.
5. To remove line pressure limiting valve, drive roll pin from modulator valve body with a punch, then remove line pressure limiting valve

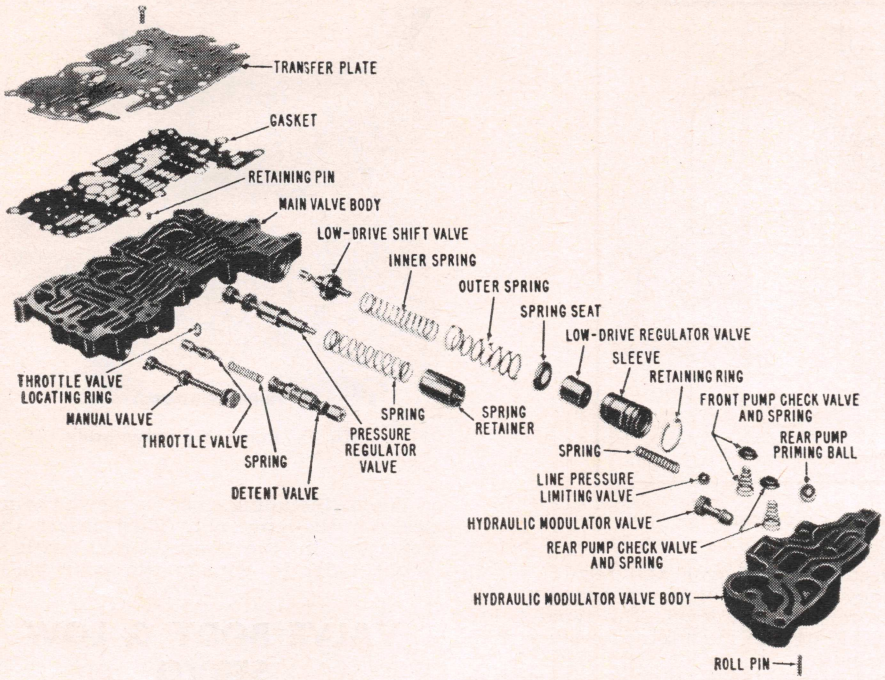

Fig. 8 Valve body components

spring and valve from their bore in the modulator body.

6. Remove screws and separate the transfer plate and gasket from the main valve body.
7. To remove the low drive shift valve components, remove retainer ring, then release the pressure and remove low drive regulator valve sleeve, regulator valve, spring seat and inner and outer springs. Lightly tap main valve body with a plastic mallet to remove the low drive shift valve from its bore.
8. To remove the TV valve components, remove retaining pin by wedging a thin screwdriver between its head and the surface of the main valve body, then remove detent valve assembly and throttle valve spring. Complete disassembly of the throttle body by removing the "E" ring from the throttle valve, then remove throttle valve from main valve body by tapping valve body with a plastic hammer.

Inspection

A thorough cleaning of all parts in clean solvent is mandatory. Check all valves and their operating bores for burrs or other deformities which could result in valve hang-up.

Assemble

Referring to Fig. 8, complete assembly by reversing the foregoing instructions. Tighten screws to 38-50 *inch lbs.* and check shift cable adjustment as described earlier.

Low Servo Piston Repairs

Disassemble the servo piston by removing the hairpin clip. Remove ring from piston and install it in low servo bore to measure the ring gap which should be .002″ to .012″.

Assemble ring to piston and measure clearance between ring and one wall of piston groove which should be .0005″ to .005″.

Installation

1. Install low servo piston and return spring in transmission bore and engage notch in piston shaft with low band apply strut, loosening low band screw slightly to permit piston ring to seat in case bore.
2. Install valve body in transmission while simultaneously loosening low band screw until it is possible to index valve body on dowels in case. If manual valve is installed, index it with a manual valve lever in case; then secure valve body with 20 bolts to a torque of 9-11 ft. lbs.
3. Install O-ring in valve body and install oil pick-up pipe and secure with screw.
4. Complete installation and adjust low band as outlined previously.

Service Operations, Power Train Removed

All operations which follow must be performed with the power train removed from the vehicle and mounted on the fixture used for its removal.

TRANSMISSION DISASSEMBLE

1. Drain oil and remove 12 bolts securing front pump to case.
2. *If overhaul is being made with the transmission installed on power train, loosen low band adjusting screw jam nut and fully tighten the adjusting screw. This will prevent the case components from being pulled out when front pump is removed, Fig. 9.*
3. Remove front pump cover and pull out pump shaft, Fig. 10. Remove front pump body from case, using care not to drop pump gears. Remove pump gasket.
4. Loosen low band adjusting screw and remove low band and related parts, Fig. 11.
5. Remove clutch drum, Fig. 12. *If operations are being performed with the transmission attached to the power train, care should be taken not to disengage the ring gear from the reverse clutch face plates unless replacement of either the ring gear or reverse plates is anticipated. Engagement of the reverse plates and ring gear in the horizontal position is generally difficult and should not be attempted unnecessarily.*
6. Remove planet carrier from ring gear and remove turbine shaft. On disassemblies made with the transmission separated from the axle, the turbine shaft is removed with the separation of the two units.

NOTE—The foregoing concludes the extent of disassembly which should be attempted with the transmission assembled to the power train. Although the reverse clutch plates are accessible without further tear-down, any failure of these plates can reasonably be assumed to be caused by malfunction of the reverse clutch, access to which requires the removal of the transmission from the power train. The remaining disassembly operations can only be performed with the transmission separated from the power train.

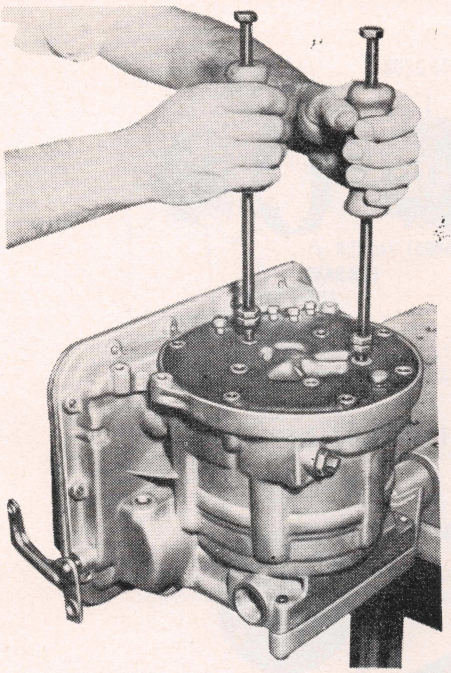

Fig. 9 Removing front pump with slide hammers

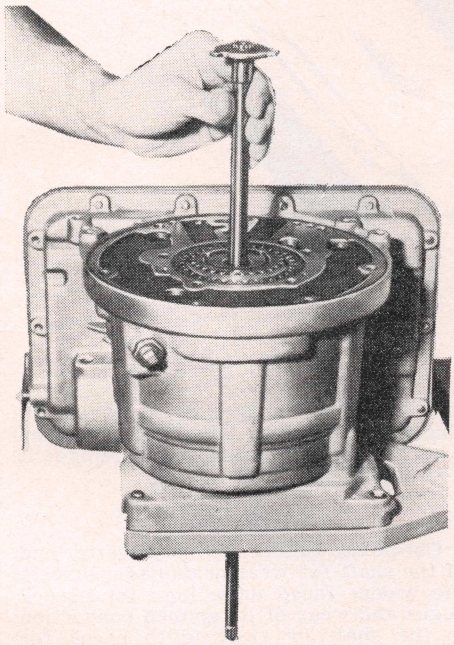

Fig. 10 Removing front pump drive shaft

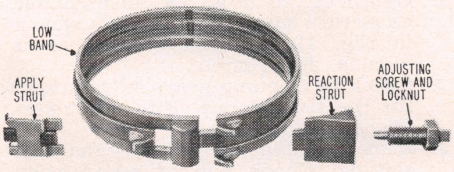

Fig. 11 Low band components

7. Remove ring gear, Fig. 13.
8. Remove clip, Fig. 14, mounted on the thick reverse reaction plate between the ends of the reverse clutch snap ring. Then remove snap ring.
9. Remove the thick reverse reaction plate, the three faced plates and the thin steel plates.
10. Remove rear pump and reverse piston mounting bolts, which are accessible from the rear (differential carrier side) of transmission case.
11. Remove rear pump and reverse piston by pulling forward with a twisting action.
12. Remove rear pump wear plate from rear of case.

INSPECTION & REPAIRS

1. Referring to Fig. 15, wash all parts with solvent and dry with compressed air. Handle transmission case carefully to avoid damaging finished surfaces as such damage could result in oil leakage.
2. Inspect all mating surfaces of the transmission case for nicks and other damage and repair as required. Be especially careful to check the area around the manual shift cable as over-tightening the cable nut could possibly crack the case at this point. Check case bores for wear and grooves.
3. Inspect condition of ring gear teeth and splines.
4. Inspect governor drive gear, splines and teeth for wear.
5. Inspect rear pump wear plate for wear and abrasion.
6. If clutch drive plate facings are worn or show signs of intensive heat, replace plates. Reaction (steel) plates, unless external tangs are peened or damaged, are generally serviceable even after failure of drive plates.
7. In the valve body area of the transmission case, check that the priming ball is retained by its wire retainer and see that the ball and its seat in the case is not deformed. Repair any seat deformation and if ball is damaged, replace it.
8. Check manual valve and TV valve linkage. If damaged replace as required.
9. If necessary, remove valve body oil pick-up tube and clean screen. Also check that the O-ring seal used between the pick-up and valve body is in good condition.
10. Inspect condition of low band. If it shows signs of excessive heat, brittleness of facing can be expected and the band should be replaced.
11. Individual inspection and repair procedures are covered in the following text. The seven bushings used in the transmission are indicated in Fig. 15 together with the applicable bushing installer.

Front Pump

1. Wash all parts and blow out oil passages.
2. If inspection shows that pump gears are serviceable, install gears and check:

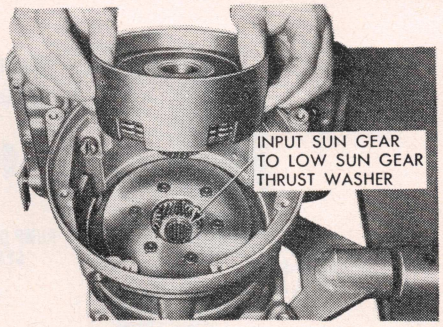

Fig. 12 Removing clutch drum

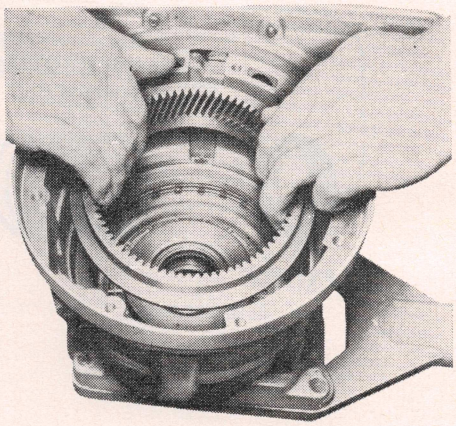

Fig. 13 Removing ring gear

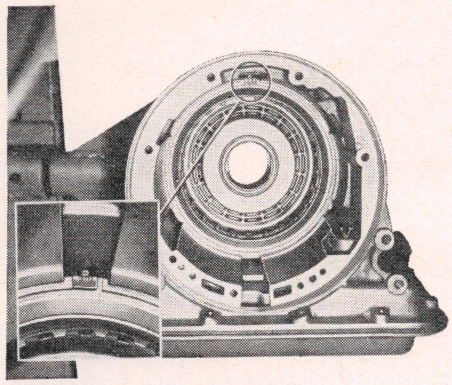

Fig. 14 Reverse clutch pack retainer ring and clip

a. Clearance between OD of driven gear and body should be .0025-.005″.
b. Clearance between driven gear and crescent should be .003-.009″.
c. With scale and feeler gauge check gear end clearance, which should be .0005-.0015″.
d. Inspect pump drive gear teeth for interference between tops of teeth and crescent in pump.

6. Replace gasket and square cut seal ring in OD of front pump cover. Also check condition of cast iron seal rings on pump body hub.
7. Check condition of front pump body bushing and replace if necessary.

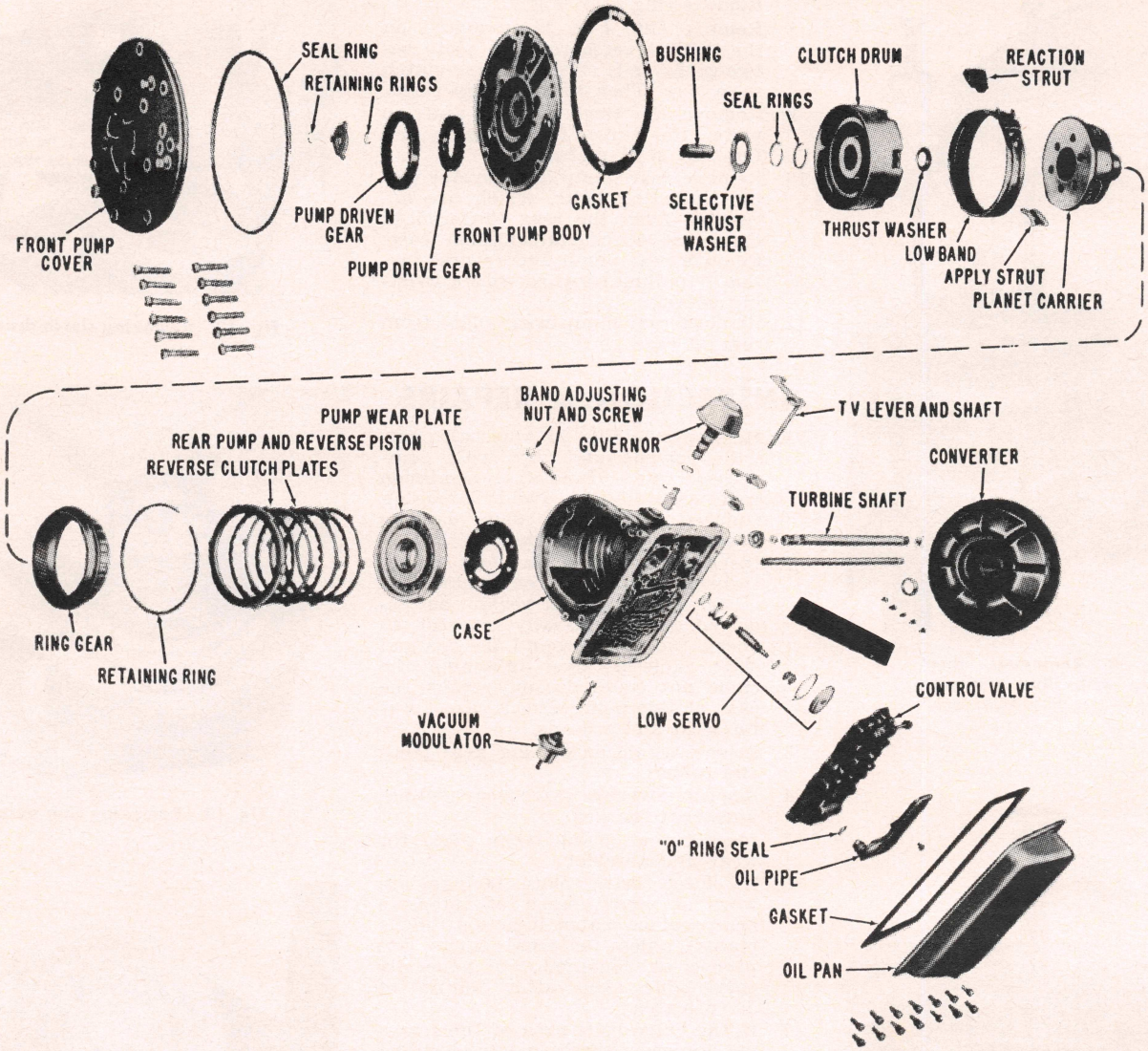

Fig. 15 Powerglide transmission

Clutch Drum

1. Referring to Fig. 16, disassemble clutch drum as picture suggests.
2. Inspect clutch drum band surface for excessive scoring or burning. Also check drum bushing for scoring or excessive wear.
3. Check steel ball in clutch drum that acts as a relief valve. Be sure that it is free to move in the hole and that the orifice leading to the front of the drum is open. If the ball is loose enough to rattle, replace clutch drum as an assembly. Replacement or staking the ball should not be attempted.
4. Check fit of clutch flange in drum slots. There should be no appreciable radial play between these two parts. Also check low sun gear for nicks or burrs and bushing for wear.
5. Check clutch plates for burning, pitting or metal pick-up. Also check to see that the faced plates are a free fit over clutch hub and that the steel plates are a free fit in clutch flange. Check for excessive wear on friction facing of drive plate teeth. Check condition of clutch hub splines and mating splines on faced plates.
6. Assemble clutch drum in reverse order of disassembly, referring to Figs. 16 and 16A.

Planet Carrier

Wash planet carrier in cleaning solvent, blow out all oil passages and air dry. Inspect planet pinions for nicks or other tooth damage. Check end clearance of planet gears; clearance should be .005″ to .035″. Check sun gear teeth for damage, also check sun gear thrust washer for damage. Inspect planet carrier splines for nicks or other damage. Also check pinion shaft ends for proper staking.

If during inspection, parts show excessive wear, they should be replaced. Fig. 17 is an exploded view of the assembly.

Turbine Shaft

Check the shaft for nicks and cracks and check the splined areas for wear. Check that the two lube holes are open. Also inspect the bushings and replace if necessary.

Pump Shaft

Check the splines at the converter end of the shaft for wear or damage. Inspect the bronze faced drive lugs for peened edges and wear of its splined connection to the shaft by twisting to check for looseness. Be especially careful to check that the drive hub is tightly retained by the snap ring. If bronze hub is worn, remove top snap ring and replace hub.

Rear Pump and Reverse Piston

1. Referring to Fig. 18, disassemble as picture suggests. The tools shown in Fig. 19, together with a press aids in disassembly.
2. Check fit of pump gears as described for the front pump. Fits and tolerances are identical.
3. Inspect pump body for leaks and scoring. Check hub of pump body for smoothness. Any burrs on the surface would cause leakage and

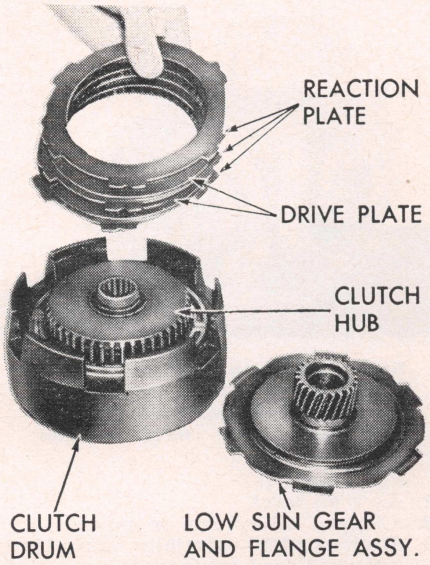

Fig. 16 Installing clutch drum plates

could result in a jammed reverse piston.

4. Check for broken return springs and make a comparative check of spring heights by standing all springs in a row. If appreciable variance of spring height is noted, replace springs.
5. Check condition of rear pump body bushing and replace if necessary.

Converter

It is not necessary to drain the converter as it is welded and no internal repairs can be made.

Check the starter gear for worn or broken teeth and for broken welds at its attachment to the converter assembly. If starter gear is undamaged but welds are loose or broken, reweld as required.

Check converter seams for stress or breaks and either replace converter or repair welds as required. If welds are repaired, keep added material to a minimum by carefully chipping off all scale and filing away any unnecessary weld to obtain converter balance as close to original as possible. Replace the converter if roughness due to unbalance is noted after reassembly to engine. Check converter bushing for wear and replace if necessary.

TRANSMISSION ASSEMBLE

The following steps apply only if the transmission is separated from the Power Train.

1. Install two improvised guide pins in rear pump bolt holes. Install rear pump wear plate on guide pins, using a small amount of vaseline to hold plate in place.
2. Insert rear pump and reverse piston. Then insert a length (½" to ¾" wide) of .010-.015" shim stock between piston outer seal and case. With rear of case downward, running the shim stock around the entire diameter of the seal will seat the seal quickly. Remove guide pins and install rear pump mounting bolts, torquing them to 9-11 ft. lbs.
3. Install reverse clutch drive and reaction plates alternately starting with a steel plate, and finishing with a faced plate. The notched lug in each steel plate is installed so it is at the top of the groove at the 4 o'clock position in the case. Then install the thick reaction plate; it has a square "dimple" on its lug which engages the 4 o'clock case groove.
4. Install reverse clutch retainer ring in such a manner so that the open ends of the ring are at the 12 o'clock position; then install retainer clip (Fig. 14) on thick reaction plate between ends of snap ring.
5. With rear of transmission case downward, align internal lands and grooves of reverse face plates.
6. Engage ring gear to reverse drive plates, Fig. 13. Engagement must be made by feel while jiggling the drive plates laterally.
7. *On assemblies being performed with the transmission installed on the Power Train, Install the turbine shaft at this point. Be sure to fully engage splines of turbine shaft to those in converter turbine.*
8. Install planetary unit with a slight twist to engage planet gears with ring gear. Be sure to engage the two rear pump drive lugs on planet hub with grooves in rear pump drive gear.
9. Install thrust washer on captive input sun gear in planetary gear set with flange of thrust washer toward front of transmission. If necessary, apply a small amount of vaseline to keep thrust washer centered, especially if the work is being performed with the transmission assembled to the Power Train.
10. Install clutch drum assembly, using a slight twist to engage low sun

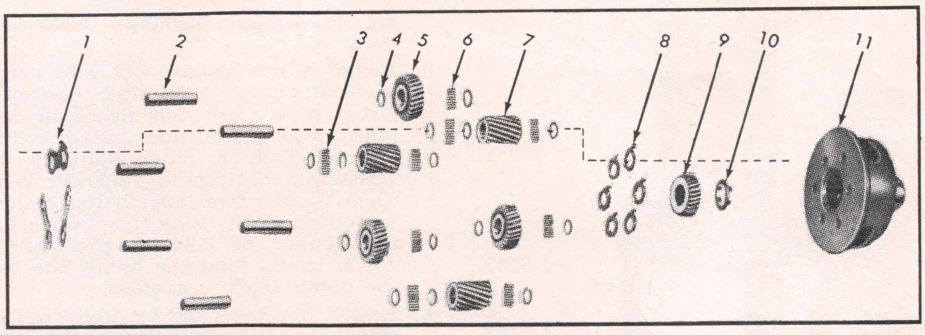

Fig. 17 Planet carrier assembly

1. Lower pinion thrust washers
2. Pinion shafts
3. Short needle bearings
4. Needle bearing washers
5. Short planet pinion
6. Long needle bearings
7. Long planet pinion
8. Upper pinion thrust washers
9. Input sun gear
10. Thrust washer
11. Planet carrier

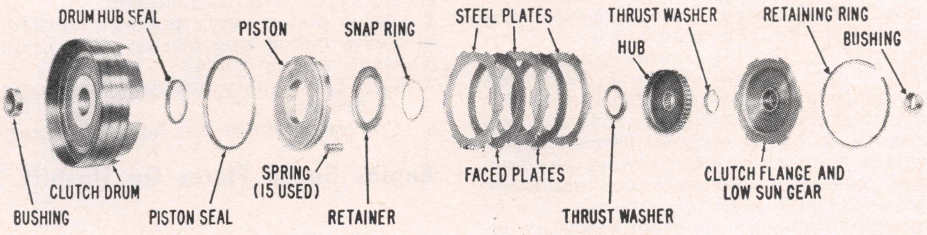

Fig. 16A Clutch drum and component parts

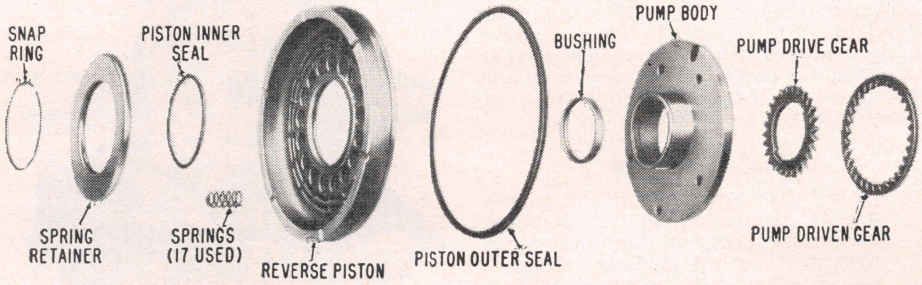

Fig. 18 Rear pump and reverse piston

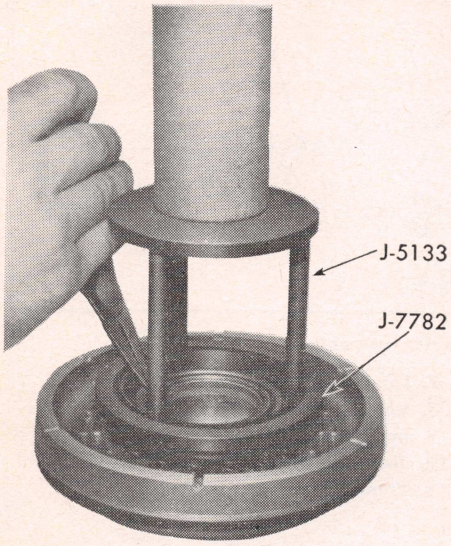

Fig. 19 Removing reverse piston return spring retainer

gear to planet gears in gear set.

11. If assembly is being performed with transmission removed from Power Train, turn transmission to a horizontal position. Then install low band and its component parts, Fig. 20. *When the linkage is all installed, snugly tighten the low band adjusting screw to prevent struts from falling out of place.* Then jiggle clutch drum slightly to center band and linkage.

Front Selective Thrust Washer Determination

At this point, prior to the installation of the front pump when overhauling the transmission while assembled to the Power Train, the thrust washer selection must be determined with the tool shown in Fig. 21 as described below. *The use of this tool and the following procedure is absolutely limited to overhauls performed while the transmission is assembled to the differential carrier. At this point, during overhauls with the transmission separated from the differential carrier, install the original (unless necessary to replace) thrust washer on the front pump hub without gauging, and complete transmission assembly. Final end play adjustment would then be made at the rear (governor gear) as described in the Power Train Section.*

Insert pilot of tool into bore of clutch drum and secure with two front pump mounting bolts. Tighten bolts fully to compress pilot spring. See that the plunger is fully seated. Then observe plunger action and select thrust washer as instructed in Fig. 21. Remove tool and install thrust washer selected on front pump hub.

Final Assembly

1. Install front pump body with new gasket, being careful not to break cast iron oil ring on pump hub when they are indexed to clutch drum.
2. Install front pump drive shaft, Fig. 10. Use care when inserting shaft not to damage bushings in transmission.
3. Install a new square cut seal ring in front pump cover; then position pump cover. Dip bolt heads in oil impervious sealer and install bolts loosely. Tighten outer bolts in a criss-cross pattern to 18-20 ft. lbs. Then tighten five inner bolts to the same torque. By using this sequence, the chance of cocking the pump which would bind the pump hub to the pump shaft is avoided.
4. Adjust the low band by first tightening the adjusting screw until it bottoms; then back off four full turns exactly. Holding adjusting screw and tighten lock nut.

TROUBLE SHOOTING

The use of pressure checks for diagnosis of Corvair Powerglide malfunctions is not recommended at this time; therefore pressure test data are not provided.

No Drive In Any Selector Position; Cannot Load Engine

1. Low oil level.
2. Clogged oil pipe screen.
3. Broken or disconnected manual valve cable.
4. Front pump defective.
5. Front pump shaft disengaged at either converter or pump gear.
6. Front pump priming ball not seating.
7. Defective pressure regulator valve.
8. Defective line pressure limit valve.
9. Rear pump check valve and rear pump priming ball not seating. Both must occur for possible malfunction.

Engine Speed Flares On Standstill Starts But Acceleration Lags

Low band partially applied due to any of the following:

1. Low oil level.
2. Clogged pick-up pipe screen.
3. Improper band adjustment.
4. Servo piston apply passage blocked.
5. Servo piston ring broken or leaking.
6. Band facing worn.
7. Low band apply linkage disengaged or broken.
8. Converter stator not holding (rare).

Engine Speed Flares On Upshift

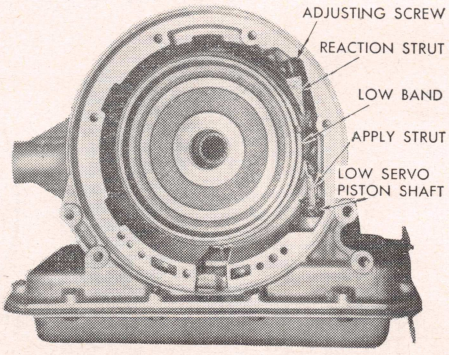

Fig. 20 Installing low band components

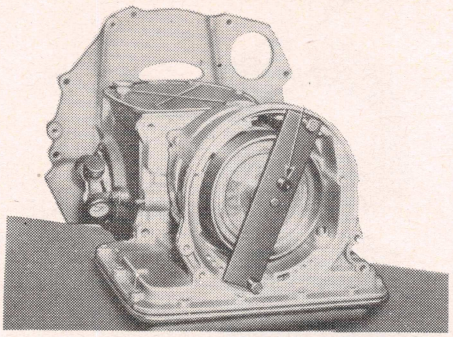

Fig. 21 Gauging clutch drum thrust washer with J-5371. Flush or above use .050" thrust washer. If below flush use .076" thrust washer

1. Low oil level.
2. Clogged oil screen or pipe.
3. High clutch partially applied (blocked feed orifice).
4. Clutch plates worn.
5. Clutch seals leak.
6. Clutch piston hung up.
7. Clutch drum relief ball not seating.
8. Vacuum modulator hose collapsed.

Transmission Will Not Upshift

Low band not releasing, probably due to:

1. Stuck low-drive valve.
2. Defective governor.
3. No rear pump output such as stuck priming ball, drive pins not engaged, or defective pump.
4. TV valve stuck or maladjusted.
5. Maladjusted manual valve lever.

Upshifts Harsh

1. Incorrect carburetor-to-transmission TV rod adjustment.
2. Improper low band adjustment.
3. Vacuum modulator hose broken or disconnected.
4. Vacuum modulator diaphragm leaks.
5. Vacuum modulator valve stuck.
6. Hydraulic modulator valve stuck.

Closed Throttle (Coast) Downshifts Harsh

1. Improper low band adjustment.
2. Vacuum modulator hose disconnected or broken.
3. Vacuum modulator diaphragm ruptured.
4. Vacuum modulator valve stuck.
5. Engine idle speed too high.
6. Sticking valves in valve body (pressure regulator or hydraulic modulator valves).

Car Creeps In Neutral

1. Incorrect manual valve lever adjustment.
2. High clutch or low band not released.

No Drive In Reverse

1. Manual valve lever improperly adjusted.
2. Cable linkage adjustment.
3. Reverse clutch piston stuck.
4. Reverse clutch plates worn out.

5. Reverse clutch leaking excessively.
6. Blocked reverse clutch apply orifice.

Improper Shift Points

1. Incorrectly adjusted carburetor-to-transmission linkage.
2. Incorrectly adjusted TV valve.
3. Governor defective.
4. Rear pump priming ball stuck.

Oil Forced Out of Filler Tube

1. Oil level too high causing planet carrier to run in oil and cause foam.
2. Oil pick-up pipe split or not sealed.

Unable To Push Start

1. Rear pump drive gear not engaged with drive pins on planet carrier hub.
2. Rear pump defective.
3. Rear pump priming ball not seating.

TRANSMISSION SHIFT POINT

Upshifts	M.P.H.
Minimum throttle	10-12½
Full throttle	41-47
Part throttle	34-41

Downshifts	M.P.H.
Closed throttle	8-12
Full throttle	38-44
Part throttle	23-30
Manual low	41-46

Rear Axle and Brake Section

AXLE DESCRIPTION

The Corvair rear axle is of the straddle-mounted hypoid type which embodies a differential carrier mounted rigidly to the engine no rear axle housing is used, Figs. 1 and 2. Independently suspended axle shafts are attached to universal joints which, in turn, are splined into the differential side gears.

A hollow shaft is used with the drive pinion to permit passage of the engine output shaft forward to the transmission. To permit the axial hole in the pinion shaft, the drive pinion and gear are two pieces coupled together. The drive pinion shaft is directly connected to the transmission output member. Preloaded tapered roller bearings support the drive pinion at fore and aft locations in the differential carrier. The ring gear is bolted to the differential case which is mounted on preloaded tapered roller bearings on each side of the differential carrier.

Components of the differential assembly are conventional with the exception of the side gears which have integral elongated splined hubs which project to the outboard extremity of the differential case and cover to receive the axle shaft universal joints.

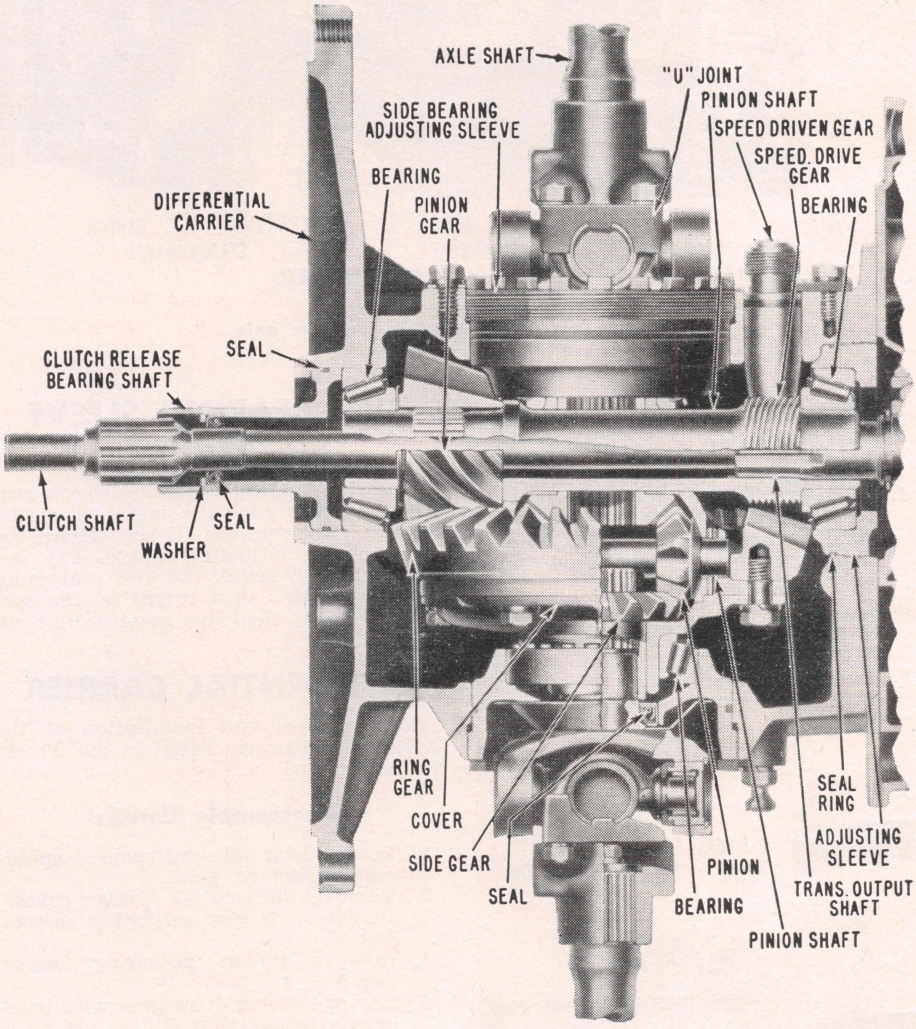

Fig. 1 Three speed transmission rear axle

AXLE SHAFT, BEARING & U-JOINT

Removal

1. Remove wheel and brake drum.
2. Unfasten bearing retainer from backing plate (four nuts accessible through hole in axle shaft flange).
3. Pull backing plate outward slightly then push it back onto the control arm studs to break away from the bearing retainer. The axle shaft can now be pulled outward sufficiently to free the U-joint splines from the differential side gears.
4. Remove U-joint from axle shaft (4 nuts from U-bolts).
5. Remove yoke from axle shaft.

Axle Shaft Bearings, Replace

1. Place axle shaft in a press with puller plate below the puller ring, Figs. 3, 3A.
2. Remove oil deflector, bearing and puller ring.
3. To install, place a new puller ring, bearing and oil deflector on axle shaft. *To prevent damaging bearing during installation of the new parts, place the old puller ring with its flat side against the bearing inner race and then press the puller ring and bearing onto the axle shaft.*
4. Remove old puller ring and install oil deflector.

Installation, Fig. 4

1. Insert axle shaft through lower control arm and install U-joint yoke on splines of axle shaft. It may be necessary to lightly tap yoke onto splines if original pieces are being installed. *When assembling new pieces for the first time, it is good practice to assemble and disassemble the yoke to the axle shaft with a press to ease the assembly of the*

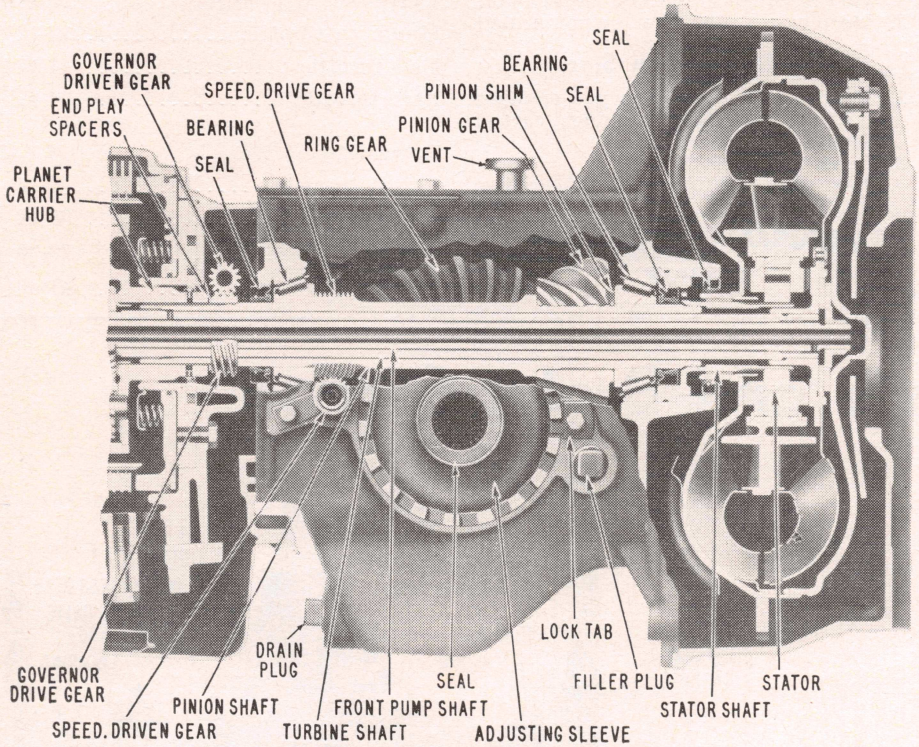

Fig. 2 Powerglide transmission rear axle

pieces in the vehicle.

2. Secure U-joint flange to axle shaft.
3. Attach U-joint to yoke on shaft with U-bolts.
4. With bearing retainer holes lined up with control arm studs, insert U-joint splines through seals in side bearing adjusting sleeves and index with side gear splines.
5. Secure bearing retainer to brake backing (4 nuts) via access hole in axle shaft flange.
6. Position brake drum control arm studs and secure wheel and drum.

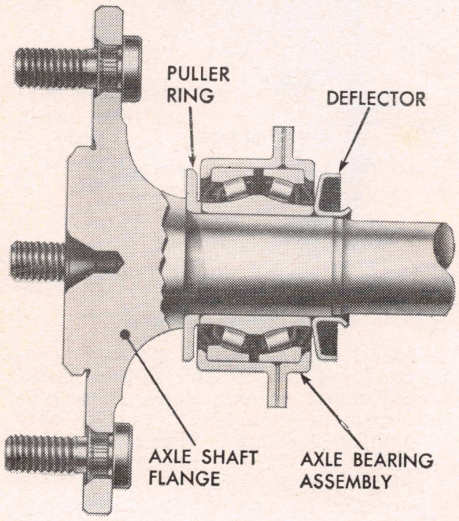

Fig. 3 Axle shaft bearings. 1961

SIDE BEARING SLEEVE SEAL

The side bearing adjusting sleeve seal may be replaced while installed in the vehicle. Remove the U-bolt from the side bearing adjusting sleeve. Pry out the seal, then install the new seal using any flat object as a driver as the seal mounts flush. *Seal lips must be inward.*

DIFFERENTIAL CARRIER

For removal and installation of the differential carrier, refer to the *Power Train Section.*

Disassemble Carrier

1. Loosen lock tab and remove speedometer driven gear.
2. Remove differential carrier cover.
3. Remove side gear adjusting sleeves, Fig. 5.
4. Remove pinion adjusting sleeve, Fig. 6
5. Remove pinion drive gear with bearings attached, Fig. 7.
6. Remove differential from carrier by shifting differential to one side of carrier and then turning 90 degrees in order to remove via the cover hole in carrier.

Inspection

1. Inspect all bearing cups, races and rollers for damage and wear, especially large end of rollers as this is where wear is most evident on taper roller bearings. *The rear axle pinion bearings are of the preloaded type, and the natural wear pattern is a slightly frosted condition with occasional slight scratches on races and rollers. This does not indicate a defective beaing.*
2. On Powerglide axles, inspect oil seal in stator support and at converter hub for evidence of wear or damage.
3. Inspect pinion splines for evidence of excessive wear.
4. Inspect ring gear and pinion teeth for scoring, chipping or cracking.
5. Check fit of differential side gears in case.
6. Check fit of side gear and U-joint shaft splines.
7. Inspect differential pinion shaft for scoring or evidence of excessive wear.
8. Inspect differential carrier for cracks or cross threads.

AXLE REPAIRS

For Three Speed and Powerglide Axles

Note—Repairs required on three speed axles only, and those for Powerglide axles only are outlined further on. Refer to Fig. 8 for relationship of parts.

Pinion and Bearing, Replace

When it becomes necessary to replace pinion bearings and/or ring gear and drive pinion, it is necessary to re-establish the pinion mounting distance.

Pinion bearings may be removed with the aid of a press. It will be noted that a shim or shims are used between the pinion rear bearing and pinion. To determine the shim thickness to be used when installing new parts special gauges are required, Fig. 9. Lacking this equipment, check the ring gear contact pattern as shown in Fig. 10. To do this the differential carrier must be assembled. If a change is indicated, disassemble the parts and change the shimming as required to obtain the proper tooth contact pattern. Shims are available in thicknesses of .006, .009, .012, .015 and .018".

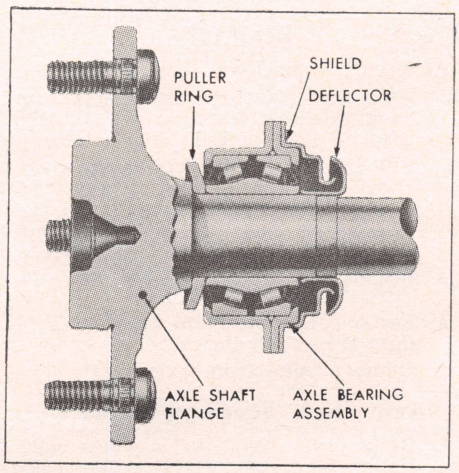

Fig. 3A Axle shaft bearings. 1962-63

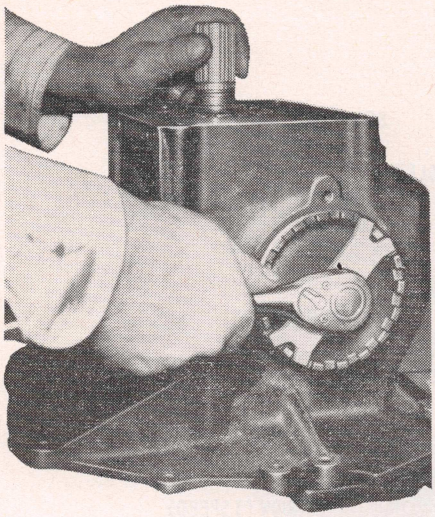

Fig. 5 Removing side bearing adjusting sleeve

Pinion Front Bearing Race

Remove the old race with a punch. On Powerglide models it is necessary to remove the seal. Install a new race in the pinion adjusting sleeve using a suitable driver to push the race in place. Install a new seal on Powerglide units.

Side Bearing Adjusting Sleeve Bearing Race

1. Punch mark the side bearing adjusting sleeve at two places $\frac{9}{16}''$ outboard from the seal bore 180° apart, Fig. 11.
2. Using a $\frac{3}{16}''$ or smaller drill, drill through the adjusting sleeve at the punch mark locations until the drill is stopped by the bearing race.
3. Drive out the bearing race with a small pin punch.
4. Install a new bearing race in the sleeve with a suitable flat plate as a driver until the bearing race is flush.
5. Seal the drilled holes by using lead balls of at least .225″ diameter, Fig. 12. Balls of this type are commercially available for carburetor repair kits.

Differential Overhaul

Disassemble the differential as suggested by Fig. 13. To remove the differential pinions after the case has been separated, drive out the roll pin securing the differential pinion shaft to the case. *Before separating the differential case halves, punch mark the rim of both halves so that they may be attached in the original position, Fig. 14.* When securing the ring gear to the case, tighten all bolts to a torque of 40-60 ft. lbs. in a criss-cross pattern.

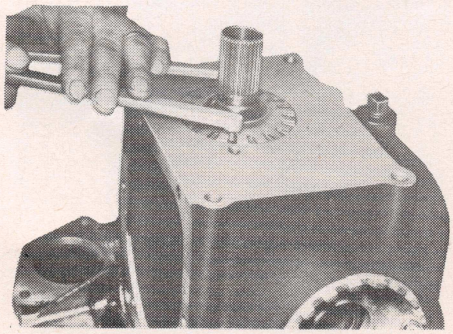

Fig. 6 Removing pinion adjusting sleeve

REPAIRS ON 3 SPEED TRANS. AXLES ONLY

Clutch Release Bearing Shaft Seal

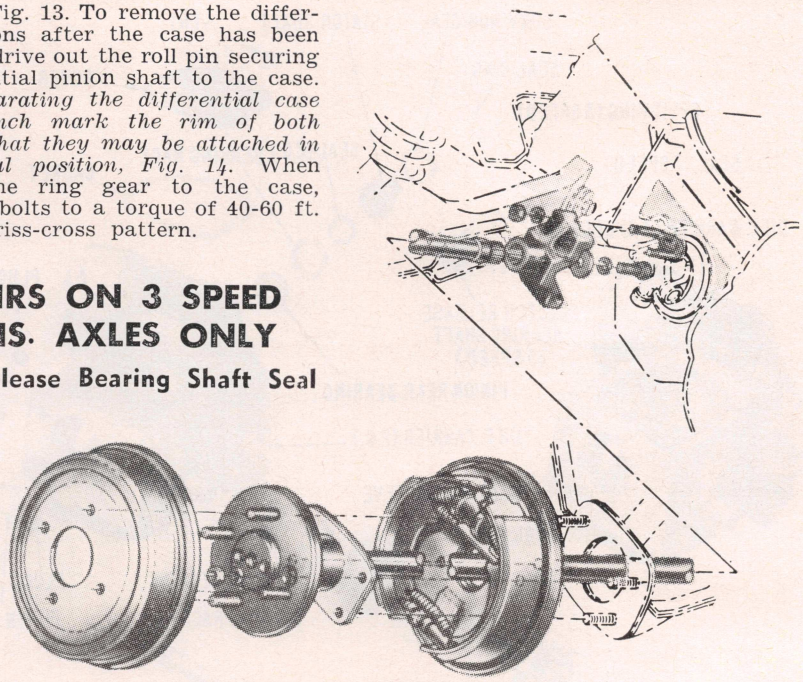

Fig. 4 Axle shaft components

Remove split ring and old seal from clutch release bearing shaft by prying out with a punch. Install the new seal, open side inward, using a suitable socket (¾″) and socket extension. Drive seal until it bottoms, then install split ring in clutch release bearing shaft.

Clutch Release Bearing Shaft and/or Pinion Bearing Rear Race

1. Place differential carrier in arbor press and press out shaft and race.
2. If a new shaft is being installed, first install the inner seal. Install a new seal ring in groove on outer diameter of bearing shaft and lubricate with vaseline.
3. Support differential carrier only on boss at clutch release bearing location with a suitable cylinder; then place bearing race on shaft and press both into differential carrier. Press until cup is flush with adjacent surface inside carrier.

REPAIRS ON POWERGLIDE AXLES ONLY

Pinion Shaft Front Oil Seal and/or Converter Hub Oil Seal

The pinion shaft front oil seal and the converter hub oil seal are located diametrically opposite fore and aft, respectively, in the differential carrier.

Remove the oil seal by prying out with a punch or similar tool. Coat outer diameter of new seal with a non-hardening sealer and install seal. The converter hub seal is mounted flush. A special driver is available to install the pinion seal. A stop is provided on this driver which insures the seal being installed to the proper depth. This same driver (J-8340) is also used to drive the converter hub seal.

Pinion Shaft Rear Oil Seal

Drive out the old seal with a pin punch inserted through access hole in stator shaft. Install new seal as shown in Fig. 15 until it bottoms.

Pinion Shaft Bushing

Remove old bushing from inside diameter of pinion shaft using a chisel or other suitable tool. Use care not to damage the bushing mating surfaces in pinion shaft during removal.

Install new bushing with a suitable driver. Special tool J-8333 is available for this operation; it has a stop provided thereon to press the bushing to the proper depth.

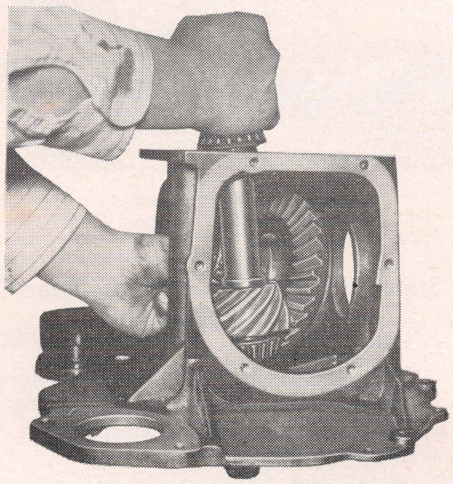

Fig. 7 Removing pinion from carrier

Fig. 8 Differential carrier assembly

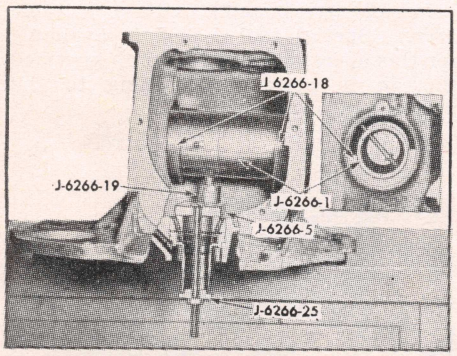

Fig. 9 Pinion depth shim selection gauges

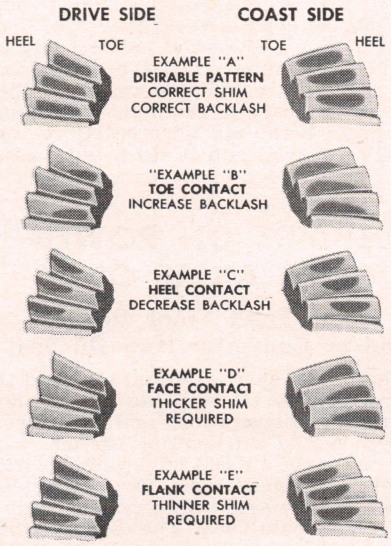

Fig. 10 Ring gear tooth contact patterns

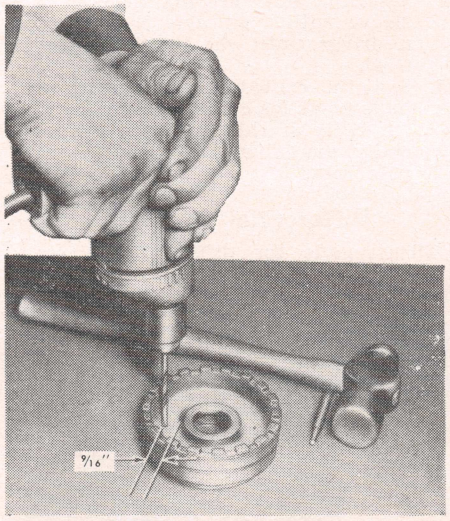

Fig. 11 Drilling side bearing adjusting sleeves for bearing race removal

Stator Shaft and/or Pinion Rear Bearing Race

1. Remove stator shaft and pinion bearing cup from carrier by placing carrier in a press and pressing downward on end of stator shaft. Replace parts removed.
2. Install seal ring in groove on outside diameter of stator shaft and lubri-

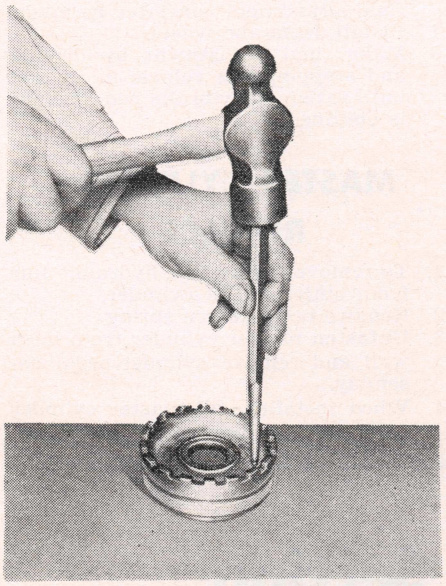

Fig. 12 Sealing drilled holes in adjusting sleeve with lead balls

cate with vaseline. *Outer diameter seal is not used on later production stator shafts.*

3. If a new stator shaft is being installed, it will be necessary to install a new pinion rear oil seal as previously described.
4. Align notch in stator shaft, Fig. 15, with drain back passage boss in differential carrier. Place bearing race on stator shaft and press race and shaft into housing, Fig. 16. *Carrier must be supported only at stator shaft boss for this operation.*

ASSEMBLE DIFFERENTIAL CARRIER

1. Referring to Fig. 8, insert differential into carrier with side bearing cones installed on differential hubs.
2. While differential is loose in carrier, insert pinion into carrier through cover hole. Then engage pinion with ring gear and carefully position pinion rear bearing in race. On Powerglide models, care must be used not to damage seal at this location when pinion is installed.
3. Install new O-ring seals in side bearing adjusting sleeves. Coat adjusting sleeve threads with a non-hardening pipe thread compound. Loosely install sleeves in carrier with side bearings positioned in sleeves.
4. On Powerglide models, install a new O-ring seal in pinion adjusting sleeve. Position pinion so that its front bearing will pick up the bearing race in sleeve and loosely install sleeve in carrier. Use care not to damage seal lips when inserting pinion shaft over adjusting sleeve.
5. Tighten both side bearing adjusting sleeves and pinion adjusting sleeve to the point of contact between bearings and races. At this point, there should be no preload on any of the bearings and ring gear and pinion backlash should be just enough so that the pinion and differential can be rotated easily and smoothly. The assembly is now ready for ring gear and pinion adjustment. *This adjustment, as well as checking ring gear and pinion backlash and other differential case operations is described in the Rear Axles Chapter.* Also refer to Fig. 10.

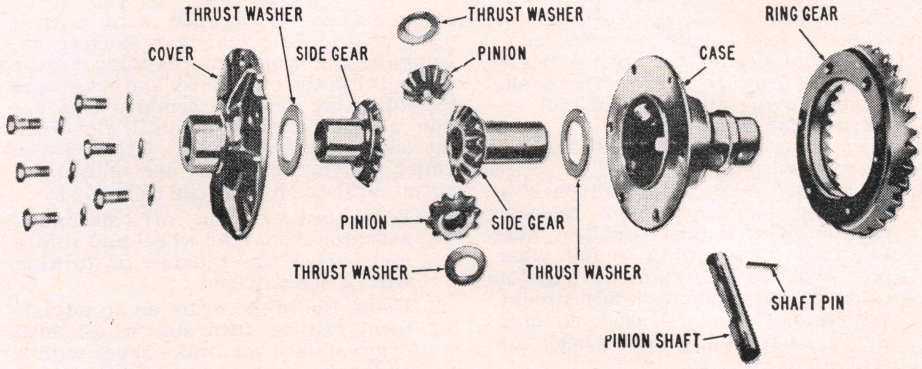

Fig. 13 Differential assembly

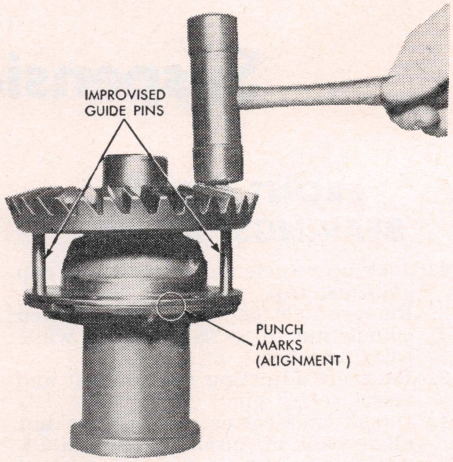

Fig. 14 Installing ring gear on differential case and cover, using improvised guide pins

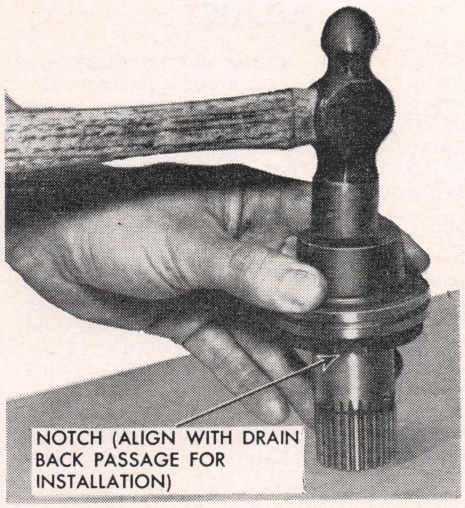

Fig. 15 Installing pinion rear oil seal in stator shaft

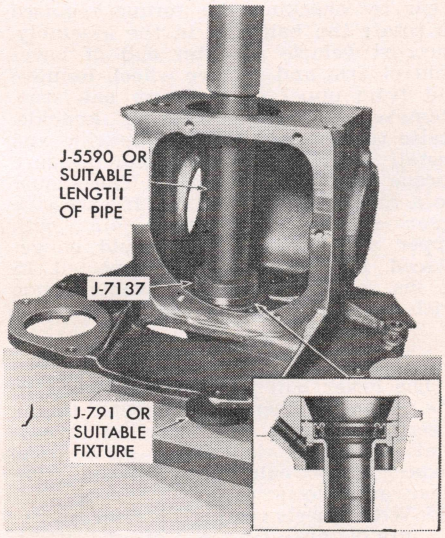

Fig. 16 Installing stator shaft and pinion rear bearing race

BRAKE ADJUSTMENT
1961-62

Hydraulic brake adjustment is confined to a single operation on each brake assembly. A spring snap cover plate is pried from the back of the brake backing plate to gain access to the star wheel adjuster. With all wheels raised off the floor, adjust as follows:

1. On rear brakes loosen check nut at parking brake cable equalizer to remove tension from brake cable. *If cable has been adjusted too short, rear brake shoes will be forced away from the anchor pins in brake release position, making correct shoe adjustment impossible.*

2. Expand brake shoes by turning star wheel adjuster with a screwdriver or special brake tool until a heavy uniform drag is felt on the brake drum. Moving outer end of tool upward expands the shoes.
3. Turn adjusting screw back 7 notches on each wheel.
4. To adjust brake cable, pull parking lever up 4 notches from released position. Then adjust equalizer nuts so that a heavy drag is felt when rear wheels are rotated. Tighten equalizer nuts and check adjustment. With hand brake released, no drag should be felt when rear wheels are rotated.

1963 Self-Adjusting Brake

Brake shoe adjustment takes place when brakes are applied with a firm pedal effort while vehicle is backing up. Applying the brakes moves the actuator which turns the star wheel and lengthens the adjusting screw assembly. This action adjusts the shoes until clearance between lining and drum is within proper limits. When the brakes are relined, an initial adjustment is made as follows:

1. With brake drum off disengage actuator from star wheel and rotate star wheel by spinning or turning with a screwdriver.
2. Using the brake drum as an adjustment fixture, turn star wheel until drum slides over brake shoes with a slight drag.
3. Turn star wheel 1¼ turns to retract brake shoes. This will allow sufficient lining-to-drum clearance so final adjustment can later be made.
4. Install drum and wheel.
5. Make final adjustment by driving and stopping the vehicle in reverse until satisfactory brake pedal height is obtained.

MASTER CYLINDER, REPLACE

1. To remove, disconnect hydraulic line from outlet end of cylinder.
2. Remove pedal return spring.
3. Unfasten master cylinder from dash wall and remove cylinder-pedal assembly.
4. When installed, fill master cylinder reservoir and bleed air from system.

Suspension and Steering Section

FRONT WHEEL BEARINGS, ADJUST

1. Jack up vehicle and remove hub cap and dust cap.
2. Remove cotter pin and tighten spindle nut to 15 ft-lbs torque while rotating wheel.
3. Back off adjusting nut one flat and insert cotter pin.
4. If slot and cotter pin hole do not align, back off adjusting nut an additional ½ flat or less as required to insert cotter pin.
5. Spin wheel to make sure it rolls freely. Secure cotter pin.

CASTER & CAMBER, ADJUST

Caster and camber adjustments are made by means of shims between the upper control arm inner support shaft and the support bracket attached to the frame side rail. Shims may be changed at either the front or rear of the shaft to change caster or at both points equally to change camber.

The addition of shims at the front bolt or removal of shims at the rear bolt will decrease positive caster. A $\frac{1}{32}$" shim difference (one shim) will change caster ¼°. Adding shims at both front and rear of support shaft will decrease positive camber. A $\frac{1}{32}$" shim will move camber 1/6°.

The adjustment procedure is to loosen the upper support shaft-to-bracket bolts, add or remove shims as required and retighten bolts.

FRONT WHEEL TOE-IN

1. Set steering gear on high point, with "saw cut" in steering shaft coupling at 6 o'clock position and steering wheel positioned for straight ahead driving.
2. Loosen clamp bolt at each end of each tie rod individually and adjust toe-in to specifications. Tighten clamp bolts and remove equpment.

REAR WHEEL TOE-IN

Due to the design of this independently sprung rear axle and suspension, it will be necessary to check and adjust rear wheel toe-in. *If drive on type equipment is used, reverse the vehicle and back it into position. Toe-in will be read as toe-out when vehicle is backwards because readings will be taken from the rear of the tires rather than the front. A tram may also be used in a similar procedure as that used on the front wheels except both sides will be adjusted at the same time. It must be pointed out, however, that since the wheels are adjusted by adding or removing shims at the front edge of the transmission, both wheels are adjusted at the same time.*

A $\frac{1}{16}$" shim added to each side will increase toe-in. Removal of a $\frac{1}{16}$" shim from each side will decrease toe-in. Shims must be added or removed in pairs so that there is always the same number at each point.

Toe-in should be ¼" to ½" per wheel. Due to manufacturing tolerances and parts "stack-up" it is possible to have toe-out on one wheel and toe-in on the opposite wheel. In this case, adjust the suspension to bring the wheel with the toe-out as close to specifications as possible but not letting the opposite wheel go out of specifications. For example, if one wheel toes-out by ¼", then the opposite wheel must toe in enough to give 0" to ¼" overall toe-in.

Rear Wheel Camber

Rear wheel camber should be ¾° positive (plus or minus ½°). There is no provision for adjustment of this item and it is provided as a checking specification only.

If camber is not within limits, either the crossmember is out of alignment with the body or has become distorted due to collision, etc., or else the control arm has become distorted, bent, etc.

FRONT END REPAIRS

Shock Absorber, Replace

1. With vehicle supported and front end hanging free, remove upper attaching nut, cup washer and grommet.
2. Remove two lower attaching bolts.
3. Withdraw shock absorber through lower control arm.
4. Reverse above procedure to install, extending shock absorber shaft to its full length to facilitate installation.

Upper Ball Joint

The upper ball joint is inspected for wear by checking the torque required to rotate the ball stud in the assembly. Support vehicle at outer end of lower control arm and remove wheel. Remove nut from upper control arm ball stud. Remove stud from steering knuckle. Raise control arm to clear knuckle and install a nut on the stud and measure torque required to turn stud. This should be a minimum of 2 ft. lbs. If excessive wear is indicated in upper joint, both upper and lower joints should be replaced. If a tight joint is suspected, 15 ft. lbs. is the maximum allowable torque with the joint well lubricated.

Lower Ball Joint

The lower ball joint is a loose fit in the assembly when not connected to the steering knuckle. If inspection reveals that the upper joints are serviceable, inspect lower ball joints for excessive wear as follows:

1. With wheels resting on floor, measure distance from top of lube fitting to bottom of ball stud. Record dimensions for each side.
2. Now jack up car under outer end

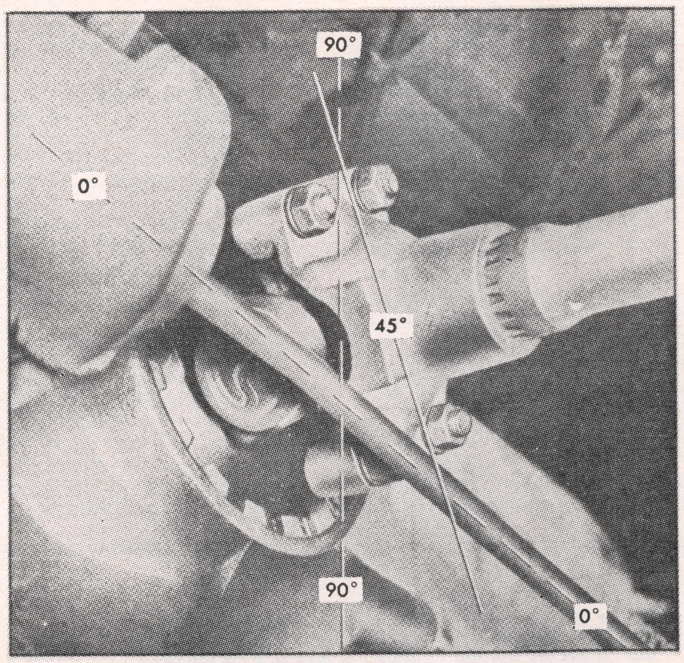

Fig. 1 Rear axle positioning for spring removal

of each lower control arm and take same measurement.

3. If the difference in dimensions on either side is greater than $\frac{3}{32}''$, the joint is excessively worn and both lower joints should be replaced. Another indication of lower joint wear is when difficulty is experienced when lubricating the joint. If the metal liner has worn to the point where the lubrication grooves in the liner have worn away, then abnormal pressure is required to force lubricant through the joint. This is another reason for replacing both lower joints.

To test whether or not the stud is loose in the knuckle, remove the cotter pin and prick punch a mark on the nut and stud to identify relative location later. Then tighten nut to original position and observe torque reading. If less than 45 ft. lbs., stud may have been loose in the knuckle and both lower joints should be replaced.

REAR SUSPENSION REPAIRS

Shock Absorber, Replace

The attachment of the rear shock absorber is identical to the mounting of the front suspension. However, the rear shock absorber holds all of the rear spring compression. For this reason, the weight of the vehicle must be resting on the tires.

Place the car on a drive-on type hoist, frame contact hoist or place jack stands under the body at each side rail, just forward of the rear wheel openings. The body should be raised high enough so that the wheels hang free and a floor jack can be placed under the tire. With a second jack, raise tire so that it is in normal position. This will allow shock absorber to be removed without interfering with the floor.

Coil Spring, Replace

1. Raise vehicle by body side rails so that control arms may swing free. Vehicle must be raised enough to allow a rolling floor jack to be placed under brake drum.
2. Loosen control arm cross shaft bolts (in ends of shaft). Remove bolt that holds brake hose bracket to underbody. It may also be necessary to disconnect and plug fuel line and heater fuel supply line (on left side only). Remove wheel. Replace nuts on studs to hold drum in place.
3. Position axle as shown in Fig. 1 to allow axle shaft and control arm to swing down far enough to remove spring.
4. Place rolling jack under brake drum. Raise jack slightly to place a light load on spring. Remove shock absorber.
5. Carefully lower floor jack until spring is free. *Do not remove or lower jack too far as this places too much strain on axle shaft and brake hose.*
6. Reverse above procedure to install and lower vehicle to floor. Bounce rear end several times and tighten cross shaft bolts to a torque of 45-55 ft. lbs.

STEERING GEAR, ADJUST

There are two adjustments to be made on the steering gear which must be performed in the following order:

Worm Bearing Preload

1. Disconnect steering connecting rod from pitman arm.

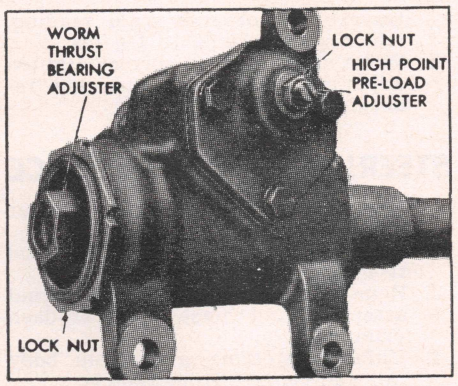

Fig. 2 Steering gear adjustment points

2. Loosen lash aduster screw, Fig. 2, enough to remove all high spot preload.
3. Rotate steering wheel to end of travel, then turn wheel back one full turn.
4. Hook a spring scale to steering wheel rim and rotate wheel by pulling on spring scale. Pounds pull necessary to keep wheel in motion should be ½ to ¾ lb. If not within this range, adjust as follows:
5. Loosen worm bearing adjuster lock nut and turn adjuster in proper direction to obtain ½ to ¾ lb pull on scale. Turning adjuster to the right increases preload.
6. Tighten lock nut and check adjustment. If there is a wide variation of scale readings or if there is a feeling of roughness while turning steering wheel, gear should be disassembled and inspected for worn or damaged parts.

High Point Preload

1. Rotate steering gear to center of travel.
2. Turn lash adjusting screw into gear case, Fig. 2, until light contact is felt between sector gear and ball nut.
3. Hold adjusting screw in position with screwdriver and tighten lock nut against gear case.
4. With spring scale attached to steering wheel rim, move steering wheel clockwise through high point (¼ turn away from center of gear

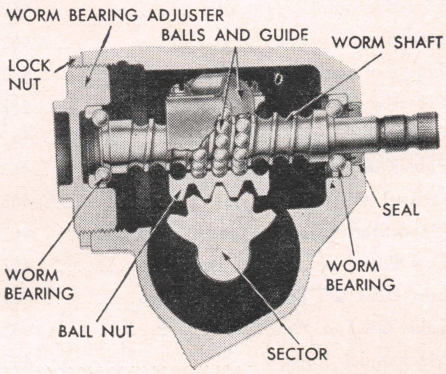

Fig. 3 Steering gear

travel) and observe scale reading, which should be 7/8 to 1½ lbs.

5. When adjustment is correct, tighten adjusting screw lock nut and recheck adjustment.

STEERING GEAR, REPLACE

1. Remove bumper and left front outer extension panel.
2. Remove steering connecting rod from pitman arm.
3. Remove steering wheel, turn signal assembly and mast jacket-to-dash clamp.
4. Unfasten steering gear from body rail and remove from vehicle.

STEERING GEAR REPAIRS

1. Referring to Fig. 3, turn pitman shaft adjuster a few turns counterclockwise. This will remove load from worm bearings caused by the close meshing of rack and sector teeth.
2. Turn worm bearing adjuster counterclockwise a few turns.
3. Unfasten and remove side cover and pitman shaft. *If sector does not clear opening in housing easily, turn worm shaft by hand until sector will pass through opening in housing.*
4. Remove worm bearing adjuster, lock nut and lower bearing from housing.
5. Draw worm shaft and nut assembly from housing. Remove upper bearing. *Use care that ball nut does not run down to either end of worm. Damage will be done to ends of ball guides if nut is allowed to rotate until stopped at end of worm.*
6. Unscrew lash adjuster from side cover. Slide adjuster and shim out of slot in end of pitman shaft.
7. If the ball bearing nut is perfectly free with no indication of binding or tightness when rotated on worm, do not disassemble. However, if these conditions exist, remove clamp and draw guide out of nut. Turn nut upside down and rotate worm shaft back and forth until all 36 balls have dropped out of nut. With balls removed, nut can be pulled endwise off worm.
8. Reverse above procedure to assemble the steering gear and adjust as outlined previously. When assembling lash adjuster, place shim in slot in end of sector shaft. Check end clearance which should not exceed .002. For adjusting purposes, shims of four thicknesses (.063, .065, .067 and .069") are available.

CUMMINS DIESEL ENGINES

CONTENTS

PAGE NO.

PRINCIPLES OF OPERATION

Air System 460
Injectors 458
PT Fuel Pump 457
PT Fuel System 457
Supercharger 460
Turbocharger 461

TROUBLE SHOOTING SECTION

Cannot Reach Governed Speed 462
Coolant Temperature Too High 463
Coolant Temperature Too Low 463
Crankcase Sludge 462
Engine Dies 462
Erratic Idle Speeds 462
Engine Misses 462
Excessive Smoking At Idle 462
Excessive Smoking Under Load 462
Excessive Fuel Consumption 462
Excessive Lube Oil Consumption 462
Excessive Engine Vibration 463
Fuel Knocks 463
Gear Train Whine 463
Hard Starting or Failure to Start 462
Low Power or Loss of Power 462
Low Lube Oil Pressure 463
Lube Oil Too Hot 463
Mechanical Knocks 463
Oil Dilution 462

PAGE NO.

Piston, Liner and Ring Wear 463
Poor Deceleration 462
Surging At Governed R.P.M. 462
Throttle Has Flat Spot 462
Wear on Crankshaft Bearings and Journals 463
Worn Valves and Guides 463

SERVICE ADJUSTMENTS

Injectors and Valves 463
Injector Plungers 464
Valve Crossheads 464
Valves 465
Governor 466

UNIT REPLACEMENT SECTION

Air Compressor 469
Aneroid Control 469
Corrosion Resistor 466
Cylinder Head 471
Fuel Pump 469
Generator 466
Injectors 470
Oil Cooler 468
Starting Motors 466
Supercharger 468
Thermostat 466
Turbocharger 467
Water Pump 467

PAGE NO.

UNIT REPAIR SECTION

Cam Followers 474
Crankshaft End Play 476
Crankshaft Rear Oil Seal 476
Cylinder Liners 475
Injectors 478
Injector Timing 474
Injector Sleeves 473
Lube Oil Cooler 477
Lube Oil Pressure Regulator 477
Lube Oil Pump 476
Main Bearings 476
Piston Pins 475
Piston Rings 475
Pistons 475
PT Fuel Pump 479
Push Rods 473
Rocker Levers 473
Rod Bearings 475
Supercharger (J Engines) 470
Supercharger (H and NH) 482
Supercharger Idler Gears 475
Timing Gears 474
Turbocharger 483
Valve Crosshead Guides 474
Valve and Injector Tappets 474
Valve Guides 474
Valve Seat Inserts 473
Water Pump 478

GENERAL SPECIFICATIONS

ENGINE IDENTIFICATION—Engine model stamped on Cummins name plate located on engine block.

Engine Model	Engine Breathing	No. Cyls.	Valves Per Cyl.	Bore & Stroke	Displ. Cu. In.	Maximum H.P. @ R.P.M.	Firing Order		Lube Oil Pressure @ Governed Speed
							Right Hand Rotation	Left Hand Rotation	
C-90	Natural	4	2	4 7/16 x 5	309	90 @ 2000	1-2-4-3	1-3-4-2	30-50
C-105	Natural	4	2	4 7/16 x 5	309	105 @ 2500	1-2-4-3	1-3-4-2	30-50
C-140	Natural	4	2	4 7/16 x 5	309	140 @ 2500	1-2-4-3	1-3-4-2	30-50
C-160	Natural	6	2	4 7/16 x 5	464	160 @ 2500	1-5-3-6-2-4	1-4-2-6-3-5	30-50
C-175	Turbocharged	6	4	4 7/16 x 5	464	175 @ 2500	1-5-3-6-2-4	1-4-2-6-3-5	30-50
C-180	Turbocharged	6	4	4 7/16 x 5	464	180 @ 2500	1-5-3-6-2-4	1-4-2-6-3-5	30-50
C-200	Turbocharged	6	4	4 7/16 x 5	464	200 @ 2500	1-5-3-6-2-4	1-4-2-6-3-5	30-50
J-70	Natural	4	2	4 1/8 x 5	267	70 @ 2000	1-2-4-3	1-3-4-2	30-50
J-80	Natural	4	2	4 1/8 x 5	267	80 @ 2500	1-2-4-3	1-3-4-2	30-50
J-120	Turbocharged	4	2	4 1/8 x 5	267	120 @ 2500	1-2-4-3	1-3-4-2	30-50
J-6	Natural	6	2	4 1/8 x 5	401	100 @ 1800	1-5-3-6-2-4	1-4-2-6-3-5	30-50
JF-6	Natural	6	2	4 1/8 x 5	401	110 @ 2200	1-5-3-6-2-4	1-4-2-6-3-5	30-50
JN-6	Natural	6	4	4 1/8 x 5	401	130 @ 2500	1-5-3-6-2-4	1-4-2-6-3-5	30-50
JS-6	Supercharged	6	2	4 1/8 x 5	401	160 @ 2500	1-5-3-6-2-4	1-4-2-6-3-5	30-50
JNS-6	Supercharged	6	4	4 1/8 x 5	401	175 @ 2500	1-5-3-6-2-4	1-4-2-6-3-5	30-50
JT-6	Turbocharged	6	4	4 1/8 x 5	401	175 @ 2500	1-5-3-6-2-4	1-4-2-6-3-5	30-50
H-6	Natural	6	2	4 7/8 x 6	672	160 @ 1800	1-5-3-6-2-4	1-4-2-6-3-5	30-50
HS-6	Supercharged	6	2	4 7/8 x 6	672	210 @ 1800	1-5-3-6-2-4	1-4-2-6-3-5	30-50
HRC-4	Natural	4	2	5 1/8 x 6	495	115 @ 1800	1-2-4-3	1-3-4-2	30-50
HR-6	Natural	6	2	5 1/8 x 6	743	175 @ 1800	1-5-3-6-2-4	1-4-2-6-3-5	30-50
HRF-6	Natural	6	2	5 1/8 x 6	743	190 @ 2000	1-5-3-6-2-4	1-4-2-6-3-5	30-50
HRS-6	Supercharged	6	2	5 1/8 x 6	743	240 @ 1800	1-5-3-6-2-4	1-4-2-6-3-5	30-50
NFT-6	Turbocharged	6	4	5 1/8 x 6	743	375 @ 2300	1-5-3-6-2-4	1-4-2-6-3-5	30-50
NH-180	Natural	6	4	4 7/8 x 6	672	180 @ 2100	1-5-3-6-2-4	1-4-2-6-3-5	30-50
NH-195	Natural	6	4	4 7/8 x 6	672	195 @ 2100	1-5-3-6-2-4	1-4-2-6-3-5	30-50
NH-220	Natural	6	4	5 1/8 x 6	743	220 @ 2100	1-5-3-6-2-4	1-4-2-6-3-5	30-50
NH-250	Natural	6	4	5 1/2 x 6	855	250 @ 2100	1-5-3-6-2-4	1-4-2-6-3-5	30-50
NHC-4	Natural	4	4	5 1/8 x 6	495	130 @ 2000	1-2-4-3	1-3-4-2	30-50
NHE-180	Natural	6	4	5 1/8 x 6	743	180 @ 1950	1-5-3-6-2-4	1-4-2-6-3-5	30-50
NHE-195	Natural	6	4	5 1/8 x 6	743	195 @ 1950	1-5-3-6-2-4	1-4-2-6-3-5	30-50
NHE-220	Natural	6	4	5 1/2 x 6	855	220 @ 1950	1-5-3-6-2-4	1-4-2-6-3-5	30-50
NHRS-6	Supercharged	6	4	5 1/8 x 6	743	320 @ 2100	1-5-3-6-2-4	1-4-2-6-3-5	30-50
NHS-6	Supercharged	6	4	5 1/8 x 6	743	290 @ 2100	1-5-3-6-2-4	1-4-2-6-3-5	30-50
NRT-6	Turbocharged	6	4	5 1/8 x 6	743	300 @ 2100	1-5-3-6-2-4	1-4-2-6-3-5	30-50
NRTO-6	Turbocharged	6	4	5 1/8 x 6	743	335 @ 2100	1-5-3-6-2-4	1-4-2-6-3-5	30-50
NT-6	Turbocharged	6	4	5 1/8 x 6	743	250 @ 2100	1-5-3-6-2-4	1-4-2-6-3-5	30-50
NT-165	Turbocharged	4	4	5 1/8 x 6	495	165 @ 2000	1-2-4-3	1-3-4-2	30-50
NT-180	Turbocharged	4	4	5 1/8 x 6	495	180 @ 2100	1-2-4-3	1-3-4-2	30-50
NT-200	Turbocharged	4	4	5 1/8 x 6	495	200 @ 2100	1-2-4-3	1-3-4-2	30-50
NT-280	Turbocharged	6	4	5 1/2 x 6	855	280 @ 2100	1-5-3-6-2-4	1-4-2-6-3-5	30-50
NT-300	Turbocharged	6	4	5 1/2 x 6	855	300 @ 2100	1-5-3-6-2-4	1-4-2-6-3-5	30-50
NT-335	Turbocharged	6	4	5 1/2 x 6	855	335 @ 2100	1-5-3-6-2-4	1-4-2-6-3-5	30-50
NT-380	Turbocharged	6	4	5 1/2 x 6	855	380 @ 2300	1-5-3-6-2-4	1-4-2-6-3-5	30-50
NTO-6	Turbocharged	6	4	5 1/8 x 6	743	262 @ 2100	1-5-3-6-2-4	1-4-2-6-3-5	30-50
NTO-280	Turbocharged	6	4	5 1/8 x 6	743	280 @ 2100	1-5-3-6-2-4	1-4-2-6-3-5	30-50
V6-200	Natural	6	4	5 1/2 x 4 1/8	588	200 @ 2600	1-4-2-5-3-6 ①	....	45-55
V8-265	Natural	8	4	5 1/2 x 4 1/8	784	265 @ 2600	15486372 ②	....	45-55
V8-350	Natural	8	4	5 1/2 x 5	950	350 @ 2500	15486372 ②	12736845 ②	45-55
VT8-430	Turbocharged	8	4	5 1/2 x 5	950	430 @ 2500	15486372 ②	12736845 ②	45-55

①—Engine numbering (viewed from front): Left bank 1-2-3, right bank 4-5-6.
②—Engine numbering (viewed from front): Left bank 1-2-3-4, right bank 5-6-7-8.

CYLINDER HEAD, INJECTORS, CROSSHEADS & VALVES

Engine Series	Cylinder Head Torque Ft. Lbs.	Injectors			Crossheads		Valve Adjustments				Valve Seat Angle, Deg.
		Adjustment④		Hold-Down Capscrews Ft. Lbs.	Clearance Between Crosshead and Valve Spring Retainer	Crosshead Adjusting Screw Lock Nut Torque Ft. Lbs.	Cold Setting		Hot Setting		
		Cold In. Lbs.	Warm In. Lbs.				Intake	Exhaust	Intake	Exhaust	
C	②	48	60	10–12	.020–.025	20–30	.015	.015	.025	.025	30
J	②	48	60	10–12	.020–.025	20–30	.015	.015	.025	.025	30
H	430–450	48	60	10–12③	.020–.025	20–30	.016	.024	.014	.022	30
H①	430–450	48	60	10–12③	.020–.025	20–30	.018	.030	.016	.028	30
NH, NT	430–450	48	60④	10–12③	.020–.025	20–30	.016	.029	.014	.027	30
V6-200	155–160	24	36	12–15	.020–.025	20–30	.014	.022	.012	.020	30
V8-265	155–160	24	36	12–15	.020–.025	20–30	.014	.022	.012	.020	30
V8-350	170–180	36	48	12–15	.025	20–30	.012	.027	.010	.025	30
VT8-430	170–180	36	48	12–15	.025	20–30	.012	.027	.010	.025	30

①—Supercharged.
②—For 11/16″ capscrews 250, for 3/4″, 400.
③—Nylock type 12–14 ft. lbs.
④—Check injector adjustment plate on engine for correct values.

CRANKSHAFT & BEARINGS SPECIFICATIONS

Engine	Main Bearing Bore In Block	Main Bearing Journal Diameter	Main Bearing Clearance	Main Bearing Nut Torque	Crankshaft End Play	Rod Bearing Journal Diameter	Rod Bearing Clearance	Rod Bearing Nut Torque
C Series	4.124–4.125	3.874–3.875	.0018–.0048	①	.004–.011	2.624–2.625	.002–.0045	①
J Series	4.124–4.125	3.874–3.875	.0018–.0048	①	.004–.011	2.624–2.625	.002–.0045	①
H Series	4.749–4.750	4.499–4.500	.0015–.005	①	.007–.013	3.124–3.125	.0015–.0045	①
NH Series	4.749–4.750	4.499–4.500	.0015–.005	①	.007–.013	3.124–3.125	.0015–.0045	①
V6-200	3.752–3.753	3.499–3.500	.0015–.0045	170–180	.007–.012	2.624–2.625	.0015–.0045	60–65
V8-265	3.752–3.753	3.499–3.500	.0015–.0045	170–180	.007–.012	2.624–2.625	.0015–.0045	60–65
V8-350								
VT8-430								

①—Tightening should be done by the Template Method; see text for procedure.

CYLINDER LINER, PISTON, RING & PIN SPECIFICATIONS

Engine Series	Liner Inside Diameter	Liner Counterbore Depth	Protrusion of Liner Above Block	Piston Clearance In Liner	Piston Pin Diameter	Ring End Gap Minimum New Liners	
						Comp.	Oil
C	4.437–4.438				1.4988–1.4990	.013	.015
J	4.125–4.126	.30925–.31050	.0045–.00675	.006–.0065	1.4988–1.4990	.013	.013
H, NH, NT (4 7/8″ Bore)	4.876–4.8775	.434–.435	.004–.006	.007–.0075	1.9988–1.9990	②	②
H, NH, NT (5 1/8″ Bore)	5.1245–5.1260①	.434–.435	.004–.006	.012–.0125	1.9988–1.9990	②	②
NH, NT (5 1/2″ Bore)	5.4995–5.5010	.350–.351	.004–.006	.0125–.013	1.9988–1.9990	②	②
V6-200, V8-265	5.4995–5.5010	.350–.351	.004–.006	.001–.014	1.7488–1.7490	.013	.013
V8-350, VT8-430	5.4995–5.5010		.005–.007				

①—For chrome plated 5.125–5.128.
②—Varies according to ring used.

Principles of Operation

Diesel engines differ from other internal combustion engines in a number of ways. Compression ratios are higher than in spark ignited engines. The charge taken into the combustion chamber through the intake consists of air only—with no fuel mixture. Injectors receive low pressure fuel from the fuel pump and deliver it into the individual combustion chambers at the right time in equal quantity and proper condition to burn. Ignition of fuel is caused by the heat of the compressed air in the combustion chambers. Figs. 1 and 2 illustrate sectional views of a typical engine, and Figs. 3 to 6 show the operating cycle.

PT FUEL SYSTEM

The principle of the PT (pressure-time) Fuel System is based on the fact that by changing the pressure of a liquid flowing through a pipe you change the amount of liquid coming out of the open end: Increasing the pressure increases the flow or the amount of liquid delivered, and vice versa. In applying this simple principle to the diesel fuel system it was necessary to provide:

1. A fuel pump to draw fuel from the fuel tank and deliver it to individual injectors for each cylinder.
2. A means of controlling the pressure of the fuel being delivered by the fuel pump to the injectors so the individual cylinders would receive the right amount of fuel for the power required of the engine.
3. Fuel passages of the proper size and type so that the fuel will be distributed to all injectors and cylinders with equal pressure under all speed and load conditions.
4. Injectors to receive low pressure fuel from the fuel pump and deliver it into the individual combustion chambers at the right time, in equal quantity and proper condition to burn. Figs. 7, 8 and 9 show the fuel flow through the system.

Fuel Pump

The fuel pump is made up of three main units, the location of which are shown in Fig. 10.

1. A gear pump which draws fuel from the supply tank and delivers it under pressure through the pump and supply lines to the individual injectors.
2. A pressure regulator which limits the pressure of the fuel to the injectors.
3. The governor and throttle which act independently of the pressure regulator to control fuel pressure to the injectors.

The fuel pump is coupled to the compressor or fuel pump drive which is

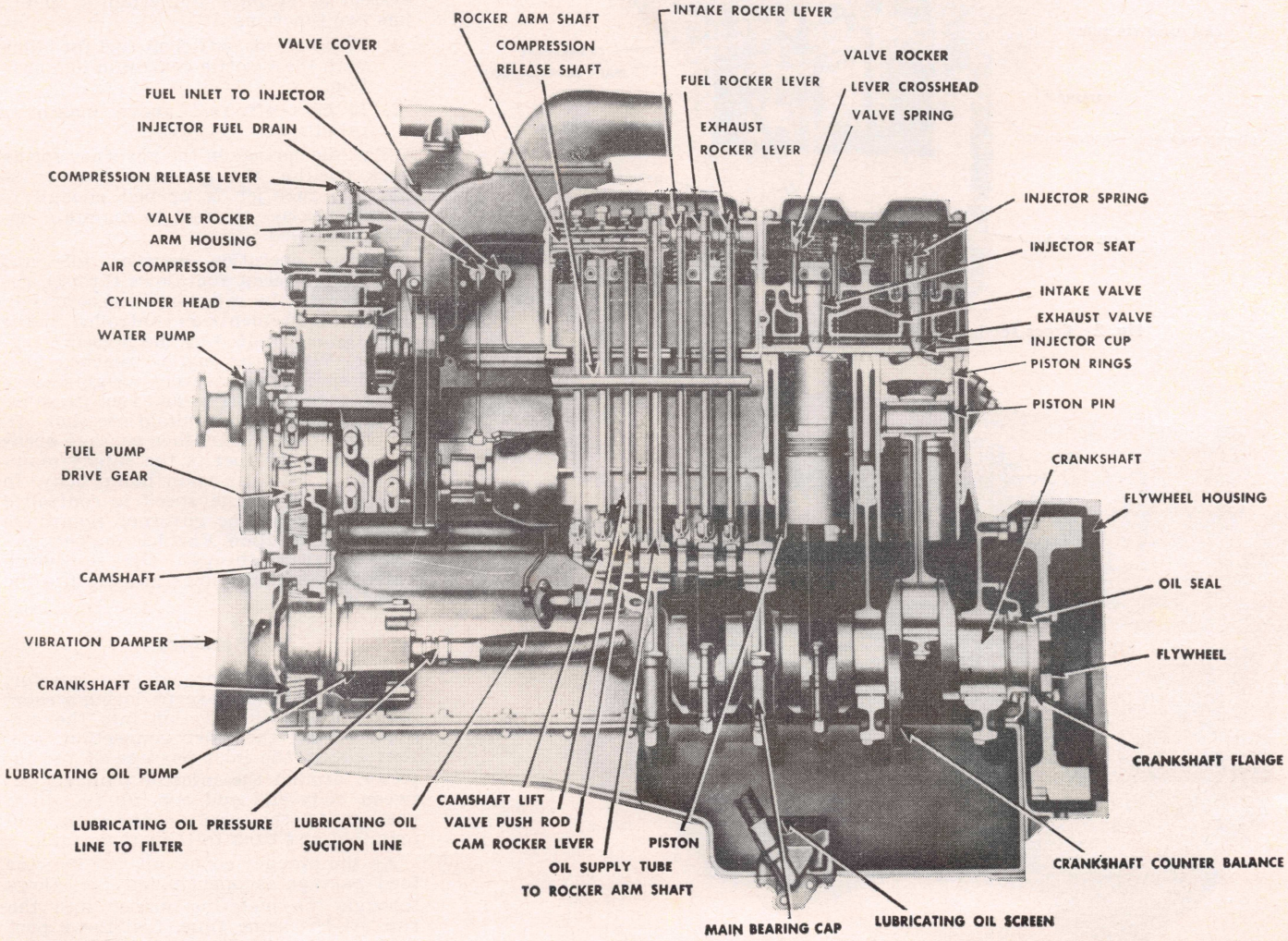

Fig. 1 Cross section of typical Cummins engine (side view)

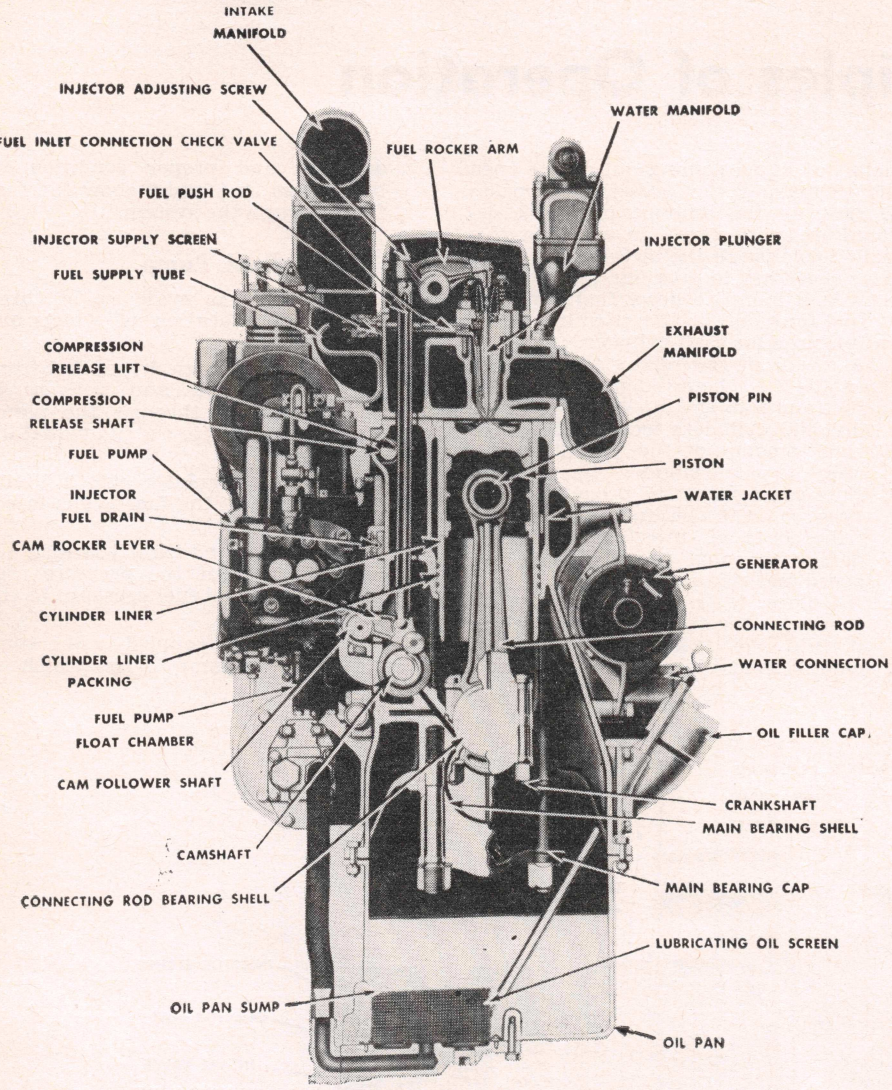

Fig. 2 Cross section of typical Cummins engine (end view)

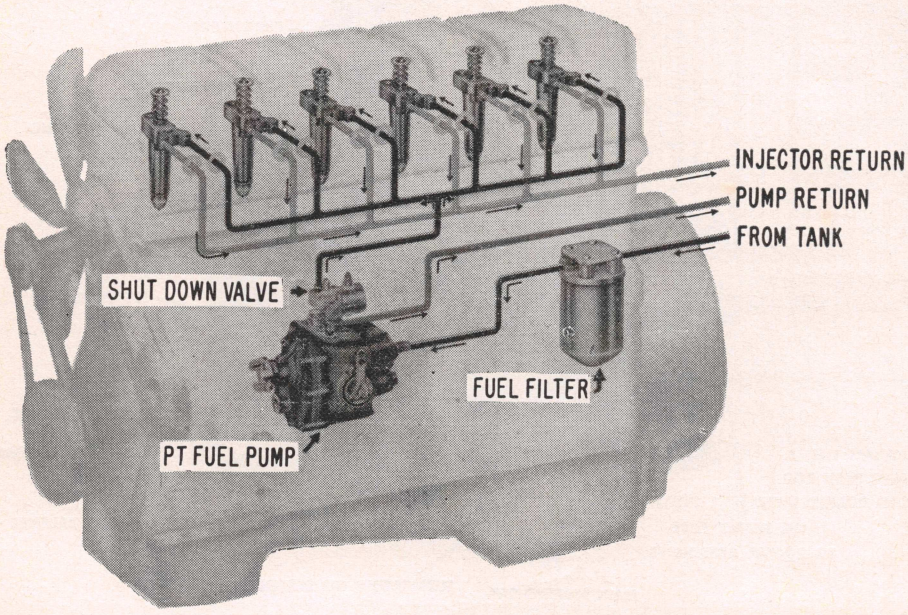

Fig. 7 PT fuel system fuel flow diagram for In-Line engines

driven from the engine gear train. The fuel pump mainshaft turns at engine crankshaft speed, and drives the gear pump, governor and tachometer shaft.

Gear Pump—The gear pump is located at the rear of the fuel pump and it is driven by the mainshaft. This unit consists of a single set of gears to pick up and deliver fuel throughout the fuel system. From the gear pump fuel flows through the filter screen and to the pressure regulator.

Pressure Regulator—The pressure regulator is a by-pass valve to regulate the fuel supplied to the injectors under pressure. On new regulators, some of the by-passed fuel flows back to the suction side of the gear pump and some is dumped into the governor weight carrier cavity, depending upon the speed under which the engine is operating.

Throttle—Fuel for the engine flows past the pressure regulator to the throttle shaft. Idle fuel passes around the shaft to the idle jet in the governor. For operation above idle, fuel passes through the throttling hole in the shaft and enters the governor through the primary jets.

Automotive Type Governor—This is an idling and high speed mechanical governor. Governor action is provided by a system of springs and weights, and it has two functions:

1. It maintains sufficient fuel for idling with the throttle control in idle position.
2. It cuts off fuel above maximum rated rpm.

The idle springs in the governor spring pack position the governor plunger so the idle fuel jet is opened enough to permit passage of fuel to maintain engine idle speed.

During operation between idle and maximum speeds, fuel flows through the governor to the injectors in accord with engine requirements as controlled by the throttle and limited by the pressure regulator. When the engine reaches governed speed, the governor weights move the governor plunger, and fuel passages to the fuel supply manifold are shut off. At the same time another passage opens and dumps the fuel to the supply manifold back into the main pump body. In this manner engine speed is controlled and limited by the governor regardless of throttle position. Fuel leaving the governor travels through the shut-down valve, inlet supply lines and on into the injectors.

Injectors

Fuel circulates through the injector, Fig. 11, at all times except during a short period following injection into the cylinder. From the inlet connection, fuel flows down the inlet passage of the injector, around the injector plunger, between body end and cup, up the drain passage to the drain connections and manifold and back to the supply tank.

As the plunger comes up, the injector feed passage is opened and fuel flows through the metering orifice into the cup. At the same time, fuel flows past the cup and out the drain orifice. The amount of fuel which enters the cup is

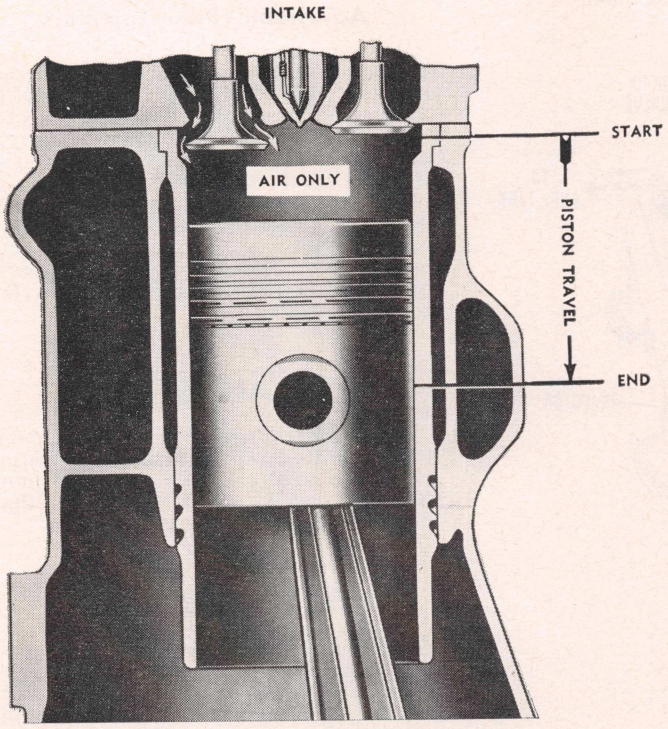

Fig. 3 The intake stroke

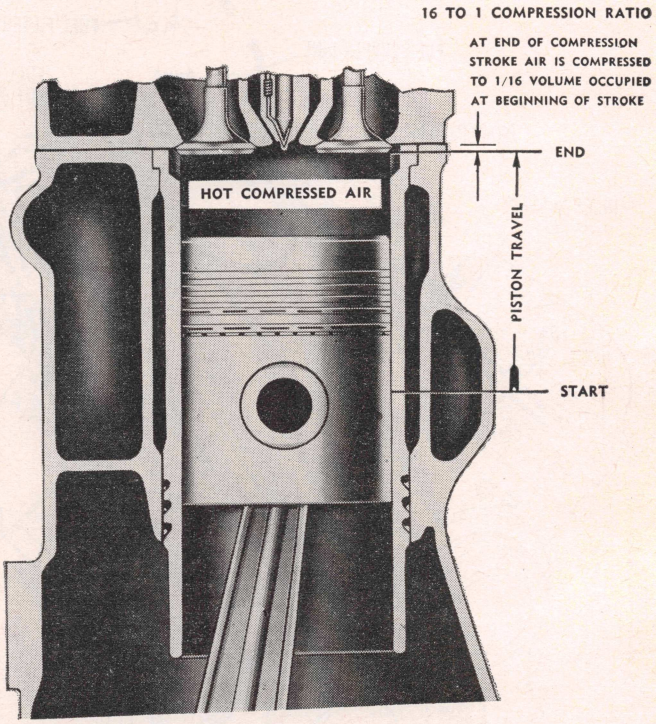

Fig. 4 The compression stroke

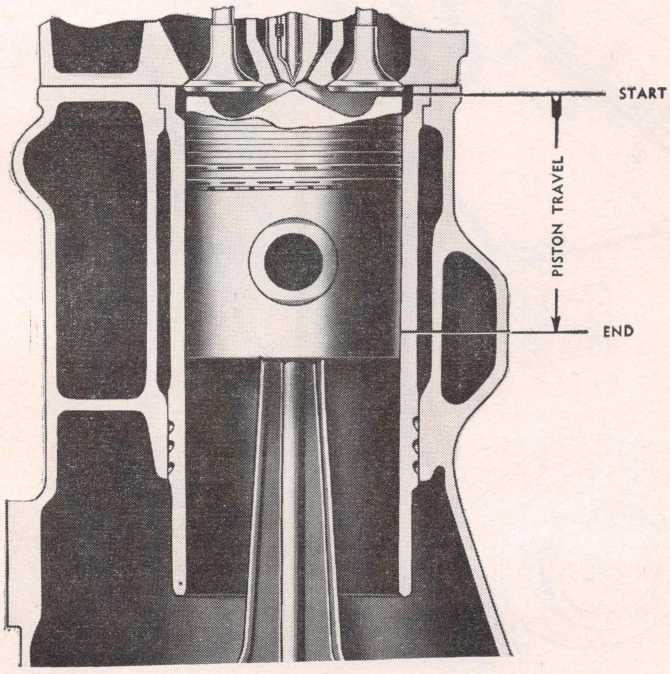

Fig. 5 The power stroke

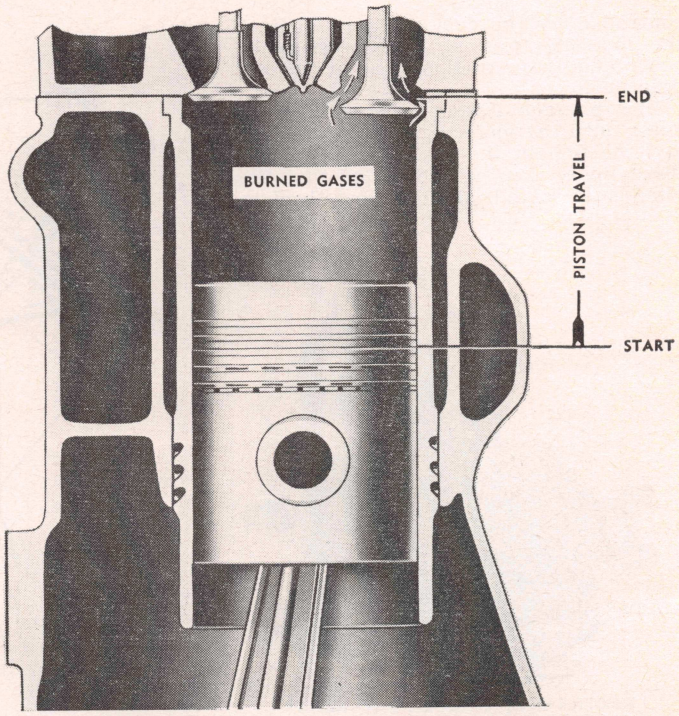

Fig. 6 The exhaust stroke

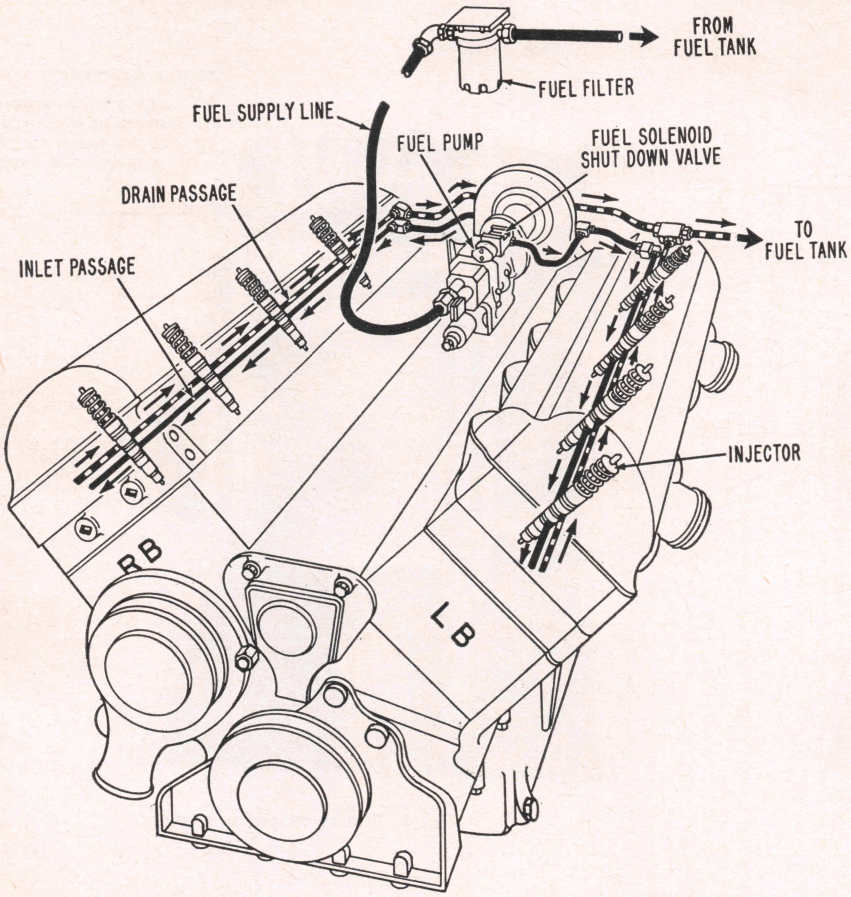

Fig. 8 PT fuel system fuel flow diagram for V8-265 (also V6-200) engine

controlled by the fuel pressure against the metering orifice. Fuel pressure is controlled by the fuel pump as previously described.

The plunger during injection comes down until the metering orifice is closed and the fuel in the cup is injected into the cylinder. During the period that the plunger is seated, all fuel flow through that injector ceases, Fig. 12 illustrates the fuel injection cycle.

Adjustable Flow Injectors

New injectors with adjustable flow bodies are being used on all production engines. This type injector contains a larger metering orifice and a selected orifice plug in the inlet passage to regulate proper fuel flow. It is designed to improve fuel distribution between individual cylinders, obtain more uniform manifold pressures on the same model engines; provide engines with torque curves with closer tolerances; improve quality of injectors and balance the flow to closer standards.

THE AIR SYSTEM

The supercharger, Fig. 13, is a gear-force additional air into the combustion chambers so the engine can burn more fuel and develop more horsepower than if it were naturally-aspirated.

SUPERCHARGER

The supercharger, Fig. 13, is a gear-driven air pump which uses rotors to force air into the engine cylinders. The supercharger is driven from the engine crankshaft through a gear train turning at about 1.8 engine speed.

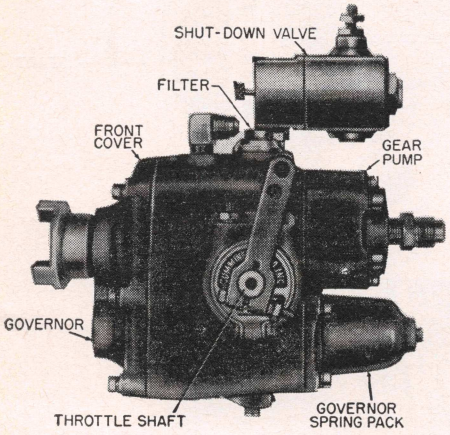

Fig. 10 PT fuel pump with mechanical governor for automotive use

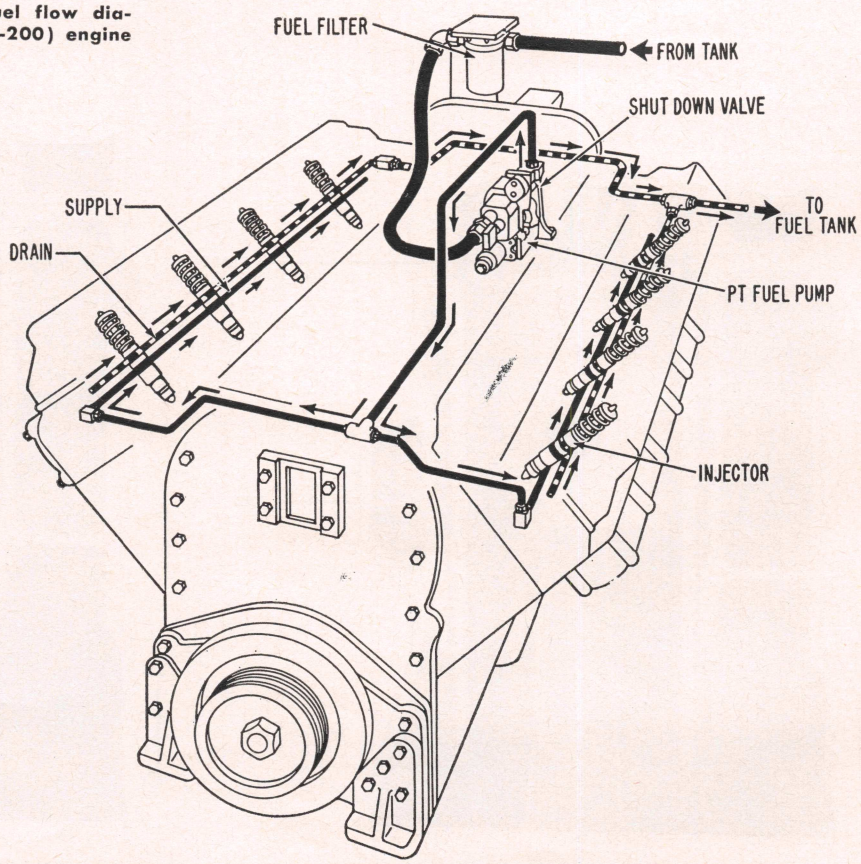

Fig. 9 PT fuel system fuel flow diagram for V8-350 and VT8-430 engines

TURBOCHARGER

The turbocharger consists of a turbine wheel and a centrifugal blower impeller, or compressor wheel, separately encased but mounted on and rotated with a common shaft.

The power to drive the turbine wheel (which in turn drives the compressor) is obtained from the energy of the exhaust gases. The rotating speed of the turbine changes as the energy level of the exhaust gas changes so the engine is supplied with enough air to burn the fuel for its load requirements.

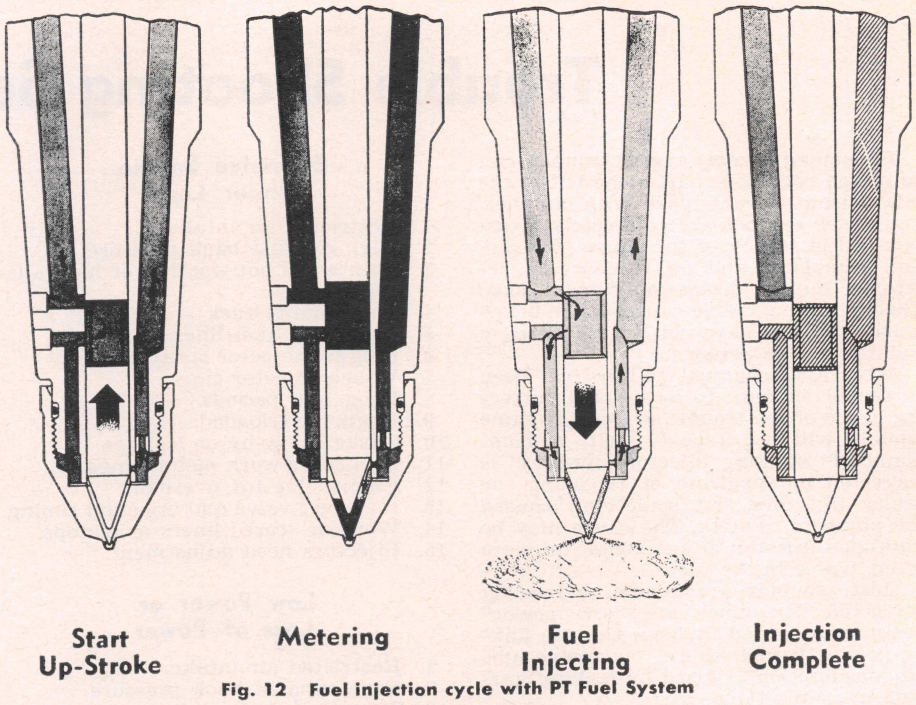

Fig. 12 Fuel injection cycle with PT Fuel System

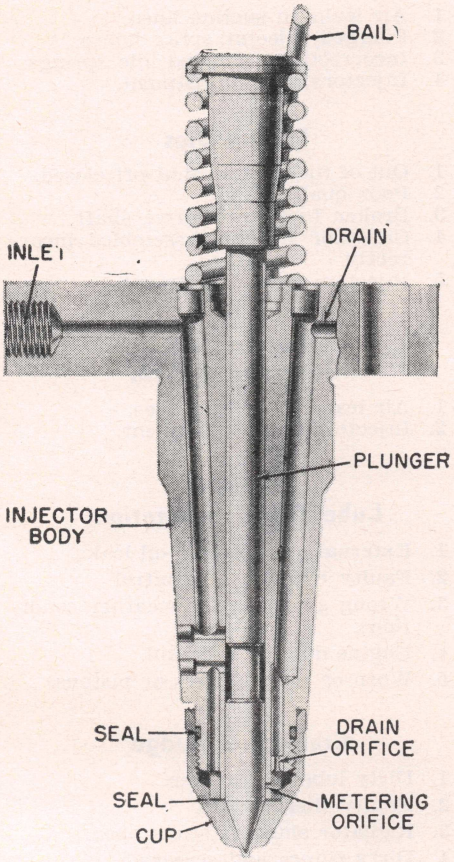

Fig. 11 Injector used with PT fuel system

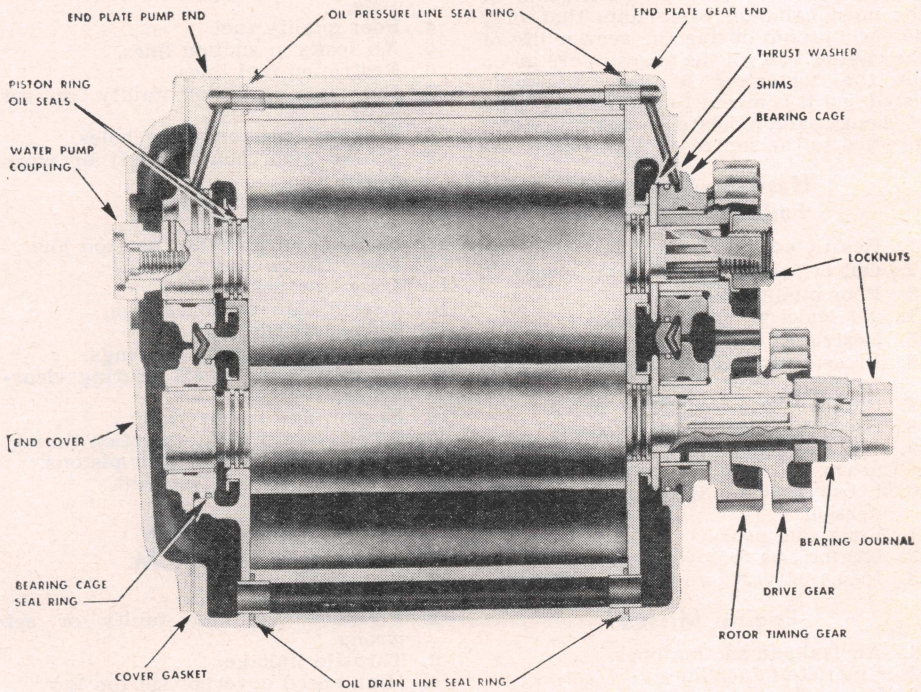

Fig. 13 Cutaway view of supercharger

Trouble Shooting Section

The source of most engine troubles can be traced not to one part alone but to the relationship of one part with another. Too often, engines are completely disassembled in search of the cause of a certain complaint and all evidence is destroyed during disassembly operations. Check all the possible causes listed below to be sure you have not missed an easy solution to the problem.

After a mechanical failure has been corrected, be sure to locate and correct the cause of the trouble so that the same trouble will not repeat itself. A complaint of "sticking injector plungers" is corrected by repairing or replacing the faulty injectors, but something *caused* the plungers to stick. The cause may be improper injector adjustments, or more often, water in the fuel.

Most troubles are simple and easily corrected. Examples are "low power" complaints caused by loose throttle linkage or dirty fuel filters, "excessive lube oil consumption" caused by leaking gaskets or connections, etc.

The following text includes some of the most common complaints that may be encountered during the service life of the engine. Not all the answers are given for the correction of the complaints listed, but it is meant to stimulate a train of thought and indicate a work procedure directed to the source of the trouble.

Hard Starting or Failure To Start

1. Restricted air intake.
2. Out of fuel or fuel shut-off closed.
3. Poor quality fuel.
4. Air leaks in suction lines.
5. Restricted fuel lines.
6. Pressure regulator faulty or set wrong.
7. Plugged injector spray holes.
8. Broken fuel pump drive shaft.
9. Scored gear pump fuel or worn gears.
10. Loose injector inlet or drain connection.
11. Long idle periods.
12. Engine due for overhaul.
13. Incorrect valve and injection timing.

Engine Misses

1. Air leaks in suction lines.
2. Restricted fuel lines.
3. Long idle periods.
4. Valve leakage.
5. Injectors need adjustment.

Excessive Smoking At Idling

1. Restricted fuel lines.
2. Plugged injector spray holes.
3. Wrong injector cups.
4. Long idle periods.
5. Gasket blow-by or leakage.
6. Broken or worn piston rings.
7. Engine due for overhaul.
8. Incorrect valve and injection timing.
9. Worn or scored liners or pistons.
10. Injectors need adjustment.

Excessive Smoke Under Load

1. Restricted air intake.
2. High exhaust back pressure.
3. Thin air in hot weather or high altitude.
4. Poor quality fuel.
5. Restricted fuel lines.
6. Plugged injector spray holes.
7. Wrong injector cups.
8. Long idle periods.
9. Engine overloaded.
10. Gasket blow-by or leakage.
11. Broken or worn piston rings.
12. Engine due for overhaul.
13. Incorrect valve and injection timing.
14. Worn or scored liners or pistons.
15. Injectors need adjustment.

Low Power or Loss of Power

1. Restricted air intake.
2. High exhaust back pressure.
3. Thin air in hot weather or high altitude.
4. Poor quality fuel.
5. Air leaks in suction lines.
6. Restricted fuel lines.
7. Pressure regulator faulty or set wrong.
8. Plugged injector spray holes.
9. Scored gear pump (fuel) or worn gears.
10. Wrong injector cups.
11. Throttle linkage.
12. High speed governor set too low.
13. Dirty filters and screens.
14. Long idle periods.
15. Gasket blow-by or leakage.
16. Valve leakage.
17. Broken or worn piston rings.
18. Incorrect crankshaft bearing clearances.
19. Engine due for overhaul.
20. Incorrect valve and injection timing.
21. Worn or scored liners or pistons.
22. Injectors need adjustment.

Cannot Reach Governed R.P.M.

1. Restricted fuel lines.
2. Pressure regulator faulty or set wrong.
3. Throttle linkage.
4. High speed governor set too low.

Throttle Has Flat Spot

1. Pressure regulator faulty or set wrong.

Excessive Fuel Consumption

1. Restricted air intake.
2. High exhaust back pressure.
3. Poor quality fuel.
4. Restricted fuel lines.
5. Pressure regulator faulty or set wrong.
6. External or internal fuel leaks.
7. Plugged injector spray holes.
8. Wrong injector cups.
9. Cracked injector body or cup.
10. Mutilated injector cup "O" ring.
11. Engine overloaded.
12. Incorrect crankshaft bearing clearances.
13. Engine due for overhaul.
14. Misalignment of engine with driven unit.

Poor Deceleration

1. Restricted fuel lines.
2. Incorrectly assembled idle springs.

Erratic Idle Speeds

1. Air leaks in suction lines.
2. Plugged injector spray holes.
3. Incorrectly assembled idle springs.
4. Injectors need adjustment.

Engine Dies

1. Out of fuel or fuel shut-off closed.
2. Poor quality fuel.
3. Broken fuel pump drive shaft.
4. Governor weights assembled incorrectly.
5. Injectors need adjustment.

Surging At Governed R.P.M.

1. Air leaks in suction lines.
2. Injectors need adjustment.

Excessive Lube Oil Consumption

1. External and internal oil leaks.
2. Faulty cylinder oil control.
3. Wrong grade oil for weather conditions.
4. Engine due for overhaul.
5. Worn or scored liners or pistons.

Crankcase Sludge

1. Dirty lube oil strainer.
2. Faulty thermostats.
3. Radiator shutters stuck open.
4. Dirty filters and screens.
5. Long idle periods.
6. Lube oil needs changing.

Oil Dilution

1. External or internal fuel leaks.
2. Loose injector inlet or drain connection.
3. Cracked injector body or cup.
4. Mutilated injector cup "O" ring.
5. External and internal oil leaks.
6. Faulty cylinder oil control.
7. Internal water leaks.
8. Long idle periods.
9. Gasket blow-by or leakage.

Low Lube Oil Pressure

1. Oil suction line restriction.
2. Faulty oil pressure regulator.
3. Incorrect engine bearing clearances.
4. Engine due for overhaul.
5. Damaged main or connecting rod bearings.

Coolant Temperature Too Low

1. Faulty thermostats.
2. Radiator shutters stuck open.

Coolant Temperature Too High

1. High exhaust back pressure.
2. Crankcase out of oil.
3. Insufficient coolant.
4. Worn water pump.
5. Faulty thermostats.
6. Damaged water hose.
7. Loose fan belts.
8. Clogged water passages.
9. Radiator core openings plugged with dirt.
10. Air in cooling system.
11. Exterior water leaks.
12. Insufficient radiator capacity.
13. Engine overloaded.
14. Engine exterior caked with dirt.

Lube Oil Too Hot

1. Insufficient coolant.
2. Worn water pump.
3. Faulty thermostats.
4. Damaged water hose.
5. Loose fan belts.
6. Clogged water passages.
7. Clogged oil cooler.
8. Insufficient radiator capacity.
9. Engine overloaded.
10. Engine exterior caked with dirt.

Piston, Liner & Ring Wear

1. Air leaks between cleaner and engine.
2. Faulty cylinder oil control.
3. Clogged oil passages.
4. Oil suction line restriction.
5. Crankcase out of oil.
6. Dirty filters and screens.
7. Engine overloaded.
8. Lube oil needs changing.
9. Broken or worn piston rings.
10. Engine due for overhaul.
11. Worn or scored liners or pistons.

Wear of Crankshaft Bearings and Journals

1. Air leaks between cleaner and engine.
2. Dirty lube oil strainer.
3. Clogged oil passages.
4. Oil suction line restriction.
5. Crankcase out of oil.
6. Dirty filters and screens.
7. Engine overloaded.
8. Lube oil needs changing.
9. Incorrect bearing clearances.
10. Excessive crankshaft end clearance.
11. Main bearing bore out of alignment.
12. Engine due for overhaul.
13. Damaged main or rod bearings.
14. Misalignment of engine with driven unit.

Worn Valves and Guides

1. Air leaks between cleaner and engine.
2. Dirty lube oil strainer.
3. Clogged oil passages.
4. Oil suction line restriction.
5. Crankcase out of oil.
6. Dirty filters and screens.
7. Engine overloaded.
8. Lube oil needs changing.
9. Valve leakage.
10. Engine due for overhaul.
11. Incorrect valve and injection timing.

Fuel Knocks

1. Poor quality fuel.
2. Air leaks in suction lines.
3. Insufficient coolant.
4. Insufficient radiator capacity.
5. Engine overloaded.
6. Injectors need adjustment.

Mechanical Knocks

1. Insufficient coolant.
2. Engine overloaded.
3. Faulty vibration damper.
4. Unbalanced or loose flywheel.
5. Broken or worn piston rings.
6. Incorrect crankshaft bearing clearances.
7. Engine due for overhaul.
8. Damaged main or rod bearings.
9. Broken tooth in gear train.
10. Loose mounting bolts.
11. Worn or scored liners or pistons.

Gear Train Whine

1. Incorrect bearing clearances.
2. Excessive crankshaft end clearance.
3. Engine due for overhaul.
4. Broken tooth in gear train.
5. Excessive gear backlash.
6. Misalignment of engine with driven unit.

Excessive Engine Vibration

1. Faulty vibration damper.
2. Unbalanced or loose flywheel.
3. Main bearing bore out of alignment.
4. Engine due for overhaul.
5. Misalignment of engine with driven unit.
6. Loose mounting bolts.

Service Adjustments

INJECTORS & VALVES

It is important that injectors and valves be in correct adjustment at all times for the engine to operate properly. The valves control engine breathing and the injectors control fuel delivery to the cylinders.

Proper injector adjustment is also important on PT injectors because they perform the dual function of metering and injection. It takes only one misadjusted injector to make the engine miss. The "miss" may occur in that or another cylinder.

Injectors set too tight deflect the assembly and decrease fuel delivery even though manifold pressure will increase. Loose injector settings increase fuel delivery and promote build-up of carbon. Loose settings are often due to making adjustments on an engine that is too hot.

False injector adjustments may be due to:

1. Carbon inside cup or on end of plunger.
2. Dirty injector seats on cup or in copper sleeve.
3. Binding adjusting screws.
4. Binding rocker levers.
5. Inaccurate torque wrenches.

Timing Mark Alignment

1. Pull compression release lever back and block in open position. This lifts all intake valves and makes it possible to turn crankshaft without working against compression. On engines without compression releases, turn each intake valve adjusting screw down one turn from adjusted position *before* turning the engine.
2. Turn engine in direction of normal rotation until the No. 1 cylinder valve set marks "VS" are lined up as ilustrated in Figs. 1 through 5. In this position both intake and exhaust valves will be closed for No. 1 cylinder.
3. Adjust injector plunger, then the valves for No. 1 cylinder as explained below. Then turn crankshaft in the direction of normal rotation to the next "VS" mark corresponding to the firing order of the engine being serviced. (Firing orders are listed in the *General Specifications* table.)
4. Continue cranking in the direction of rotation and making adjustments until all injectors and valves have been proper adjusted. Two complete revolutions of the crankshaft are needed to set all injector plungers and valves. Injectors and valves can be adjusted for only one cylinder at any one "VS" setting.

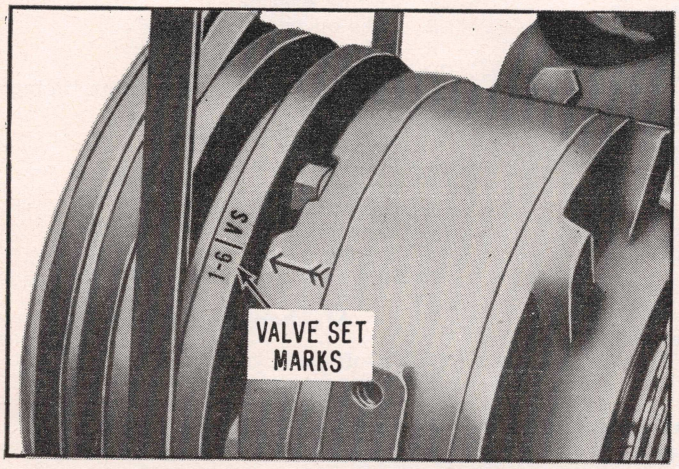

Fig. 1 Valve set timing marks. C and J Series engines

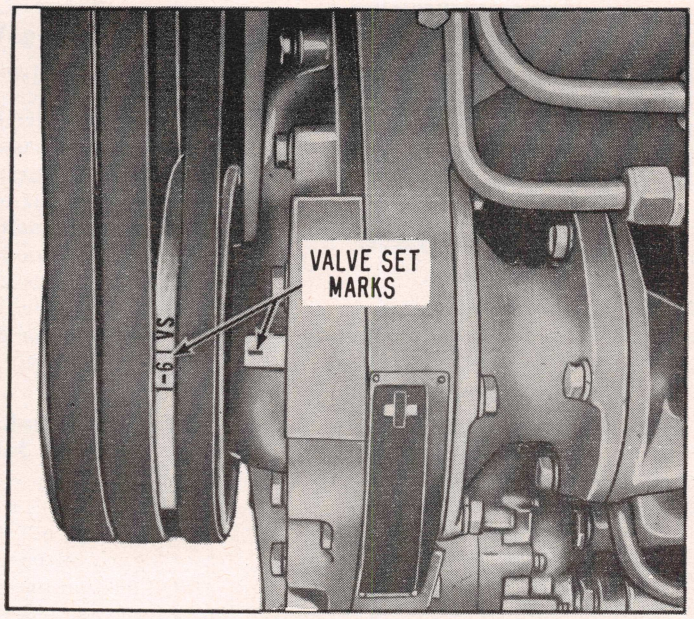

Fig. 2 Valve set timing marks. H, NH and NT engines

Injector Plungers, Adjust

Injector plungers on all engines are to be adjusted with an accurate inch-pound torque wrench and a screwdriver adapter. *See the table for proper settings.*

1. Turn adjusting screw down until plunger contacts cup and advance an additional 15° to squeeze oil from cup.
2. Loosen adjusting screw one turn. Then using torque wrench and screwdriver adapter, tighten adjusting screw to the figures shown in the specifications table for the cold setting and tighten lock nut. After all valves and injectors are adjusted and engine has been started and warmed up, adjust the injectors to the warm setting given in table.

Valve Crossheads, Adjust

All four-valve engines have crossheads to operate valves in pairs. These crossheads operate either on a solid or a tubular type guide, Figs. 6 and 7.

1. Loosen crosshead adjusting screw lock nut and back off screw one turn.
2. Use light finger pressure at center of crosshead to hold it in contact with valve stem.
3. Turn down crosshead adjusting screw until it touches valve stem.
4. For new crossheads and guides, advance adjusting screw one-third of a hex (20°) to straighten stem in guide and compensate for slack in threads. With worn crossheads and guides, it may be necessary to advance screw as much as 30° to straighten stem in guide.
5. Hold adjusting screw in this position and tighten lock nut to the torque given in the specifications table.
6. Check clearance between crosshead

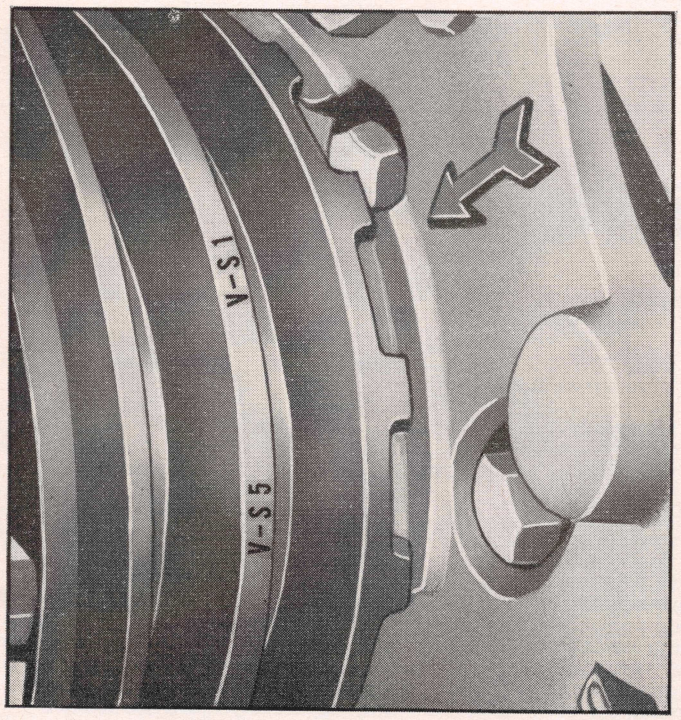

Fig. 3 Valve set timing marks. V6-200 engine

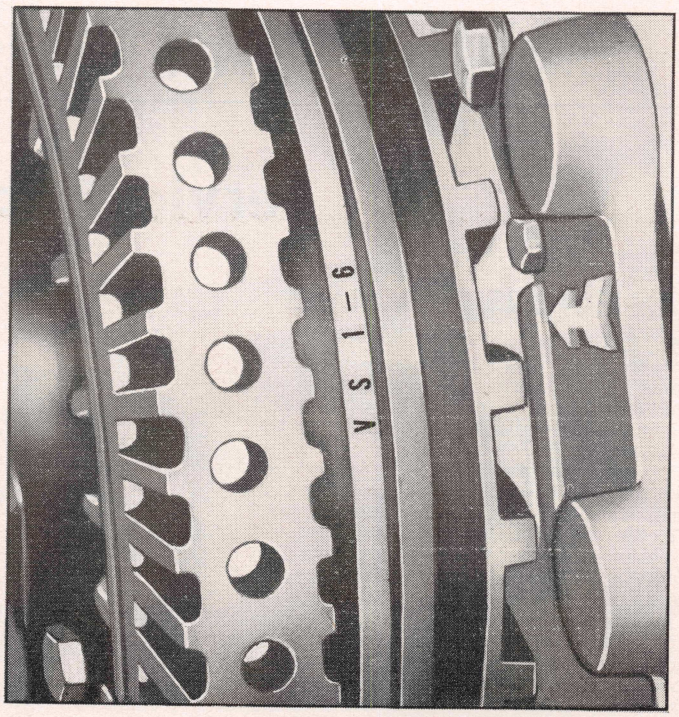

Fig. 4 Valve set timing marks. V8-265 engine

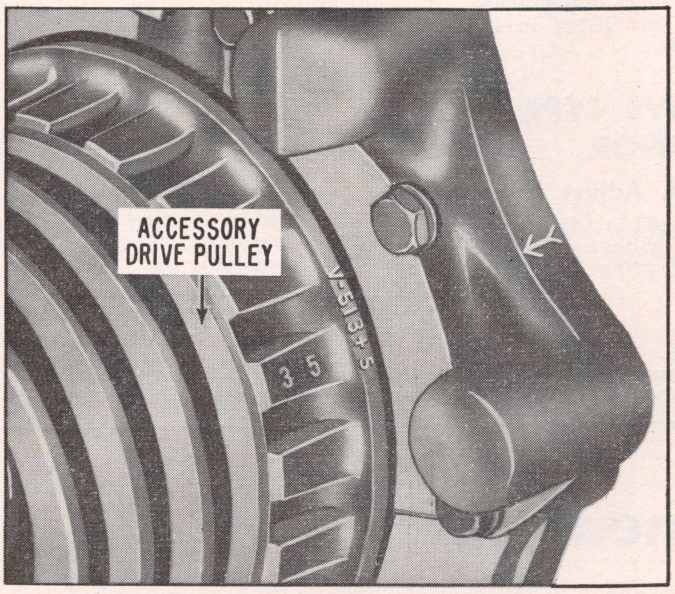

Fig. 5 Valve set timing marks. V8-350 and VT8-430 engines

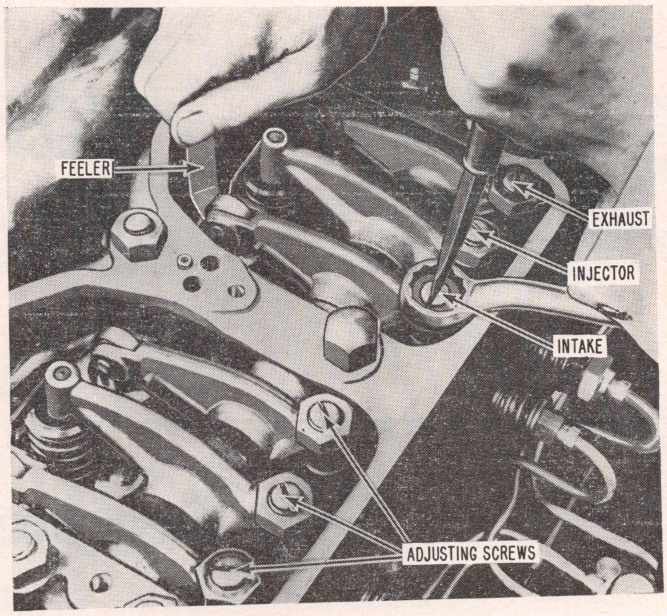

Fig. 8 Valve adjustment

and valve spring retainer with a wire gauge. There should be the clearance listed in the specifications table.

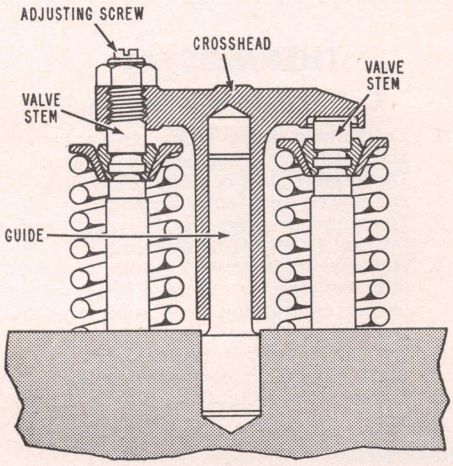

Fig. 6 Crosshead with solid guide

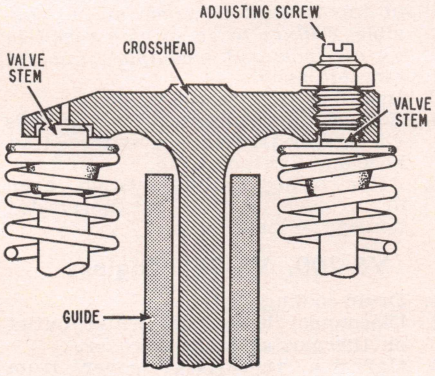

Fig. 7 Crosshead with tubular guide

Valves, Adjust

The same engine position used in setting the injectors is used for setting the intake and exhaust valves.

1. While adjusting valves, make sure that the compression release (if so equipped) is in the running position.
2. Loosen lock nut and back off adjusting screw. Insert feeler gauge between rocker lever and top of valve stem or crosshead, and turn screw down until lever just touches gauge. Lock adjusting screw in this position with lock nut, Fig. 8.
3. Always make final valve adjustment after injectors are adjusted and with

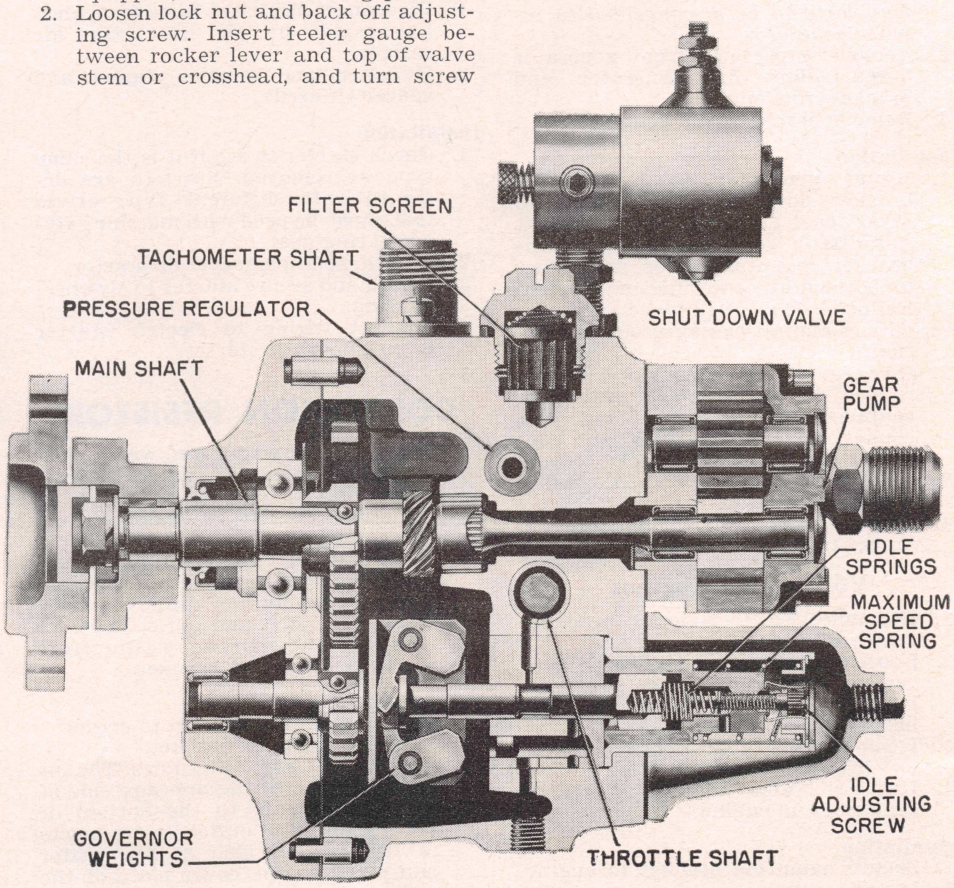

Fig. 9 PT fuel pump with automotive type governor. High speed adjustment is made by adding or removing shims under high speed governor spring

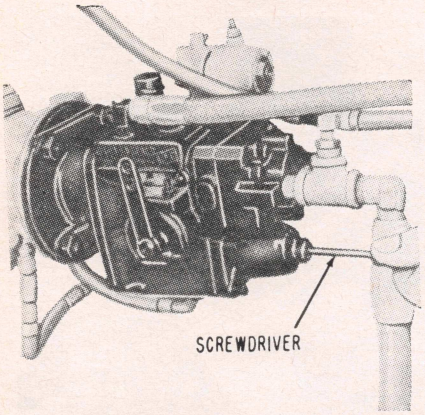

engine at operating temperature. Valve clearances are listed in the specifications table.

AUTOMOTIVE TYPE GOVERNOR

High Speed, Adjust

Maximum engine speed is adjusted by adding or removing shims under the high speed governor spring. Normally, this adjustment is made on a fuel pump test stand as the pump is calibrated.

Fig. 10 Idle speed adjustment. Automotive type governor

Idle Speed, Adjust

Warm up engine to operating temperature (140° oil temperature), then shut it off and let it idle. Remove pipe plug from spring pack cover, Fig. 9. The idle adjustment is held in position by a spring clip. Turn spring in to increase or out to decrease the speed, Fig. 10.

Idle speed should be set at 40 to 50 rpm lower than the desired if the adjustment is made with the engine running. With engine running, air collects in the spring pack housing and speed change results when the housing fills with fuel.

Unit Replacement Section

GENERATOR

C, J, H, NH, NT Engines

1. Disconnect wiring leads from generator terminals.
2. On belt-driven units, remove drive belt from generator pulley. *On some C and J applications, No. 1 cylinder injector inlet and drain manifolds may have to be disconnected to remove generator.*
3. Remove capscrews from generator bracket and lift generator and bracket from engine.
4. Remove bracket from generator.

Installation

1. Mount generator to bracket. If bracket does not have the word "Top" cast on it, be sure to mount generator so top generator-to-bracket mounting holes are closer to horizontal centerline of bracket. Failure to do so will place generator oil cup and oil passages out of position.
2. On gear-driven generators, install rubber buffer between generator coupling and drive coupling, and connect the two units. Mount generator and bracket to block.
3. On belt-driven generators, install belt over drive pulley.
4. Connect generator wiring leads to proper terminals.

V6 and V8 Engines

1. Disconnect electrical leads from generator terminals.
2. Loosen generator mounting bolts, remove adjusting link capscrew, lower generator and remove drive belt.
3. Remove generator mounting nuts and lift off generator.
4. Unfasten and remove mounting bracket from engine.

Installation

1. Secure mounting bracket to engine.
2. Install generator on mounting bracket.
3. Install drive belt and raise generator to obtain desired belt tension. After securing with adjusting link capscrews, tighten mounting bolts and nuts.
4. Connect wiring to generator terminals.

STARTING MOTORS

1. Disconnect electrical leads from electric motor or air line from air starter.
2. Unfasten and remove starter and spacer (if used).

Installation

1. Check starter to see if it is the same type as removed. Starters are designed with different type drives that must be used with matching flywheel ring gear.
2. If used, position spacer on starter.
3. Install and secure starter to flywheel housing.
4. Connect wiring to electric starter or air line to air starter.

CORROSION RESISTOR

Many engines are equipped with a corrosion resistor. A single resistor is used on engines having cooling capacities of 20/25 gallons; for larger systems, twin resistors are used.

1. Close shut-off valves in inlet and outlet lines; remove drain plug in resistor housing and drain coolant.
2. Disconnect inlet and outlet lines.
3. Unfasten and remove resistor from engine or mounting bracket.

Installation

1. Secure mounting bracket to engine.
2. Secure resistor to bracket.
3. Attach inlet and outlet lines. The inlet line connects the pressure side of the water pump to the bottom of the resistor. The outlet line connects to the suction side of the water pump and to the cover plate of the resistor.
4. Select location so that resistor will be grounded and inlet line will be less than 18 inches in length.
5. Open shut-off valve; start engine and check for leaks.
6. After a few minutes, check resistor head temperature to see if coolant is circulating. If resistor head is cold, disconnect outlet line to bleed off air. Recheck for circulation.

THERMOSTAT

C, J, H, NH, NT Engines

1. Disconnect hose from water outlet connection on thermostat housing.
2. Disconnect and remove air compressor water lines (if equipped).
3. Disconnect turbocharger water outlet line (if used) at housing.
4. Remove capscrews holding thermostat housing to cylinder head water outlet connection and separate the two units.
5. On turbocharger engines, lift housing from water by-pass coupling.
6. Remove thermostat and discard gasket.

Installation

1. Install new or tested thermostat, using new gasket. On turbocharged engines, use new rubber O-ring on water by-pass coupling.
2. Install thermostat with "V" notch at top to vent as much air as possible. *Failure to do so may result in an air lock and incomplete coolant circulation.*
3. Install capscrews and washers.
4. Connect air compressor water lines (if equipped). Connect water outlet hose and tighten clamp.
5. After filling cooling system, open drain cock at top of thermostat housing to bleed out air.

V6-200, V8-265 Engines

1. Drain cooling system.
2. Disconnect hose from water outlet on thermostat housing cover.
3. Unfasten thermostat cover from housing.
4. Lift off cover and thermostat, and

remove gasket and thermostat from cover.

Installation

1. Install new or tested thermostat in cover. With new gasket, position cover to housing and secure with capscrews and lockwashers.
2. Fill cooling system.

V8-350, VT8-430 Engines

1. These engines are equipped with two thermostats located in housings mounted at front end of each cylinder head. To remove, proceed as follows:
2. Drain cooling system, loosen hose clamps and disconnect hoses from water outlet connections on each thermostat housing.
3. Unfasten thermostat covers from cross-over pipe; remove cross-over pipe and gaskets.
4. Loosen hose clamps securing water by-pass pipe to water pump.
5. Unfasten left-bank thermostat housing cover from by-pass pipe, and lift off by-pass pipe and gasket.
6. Unfasten and lift off thermostat housing covers.
7. Lift off both housings and thermostats, and remove thermostats from housings.

Installation

1. If thermostat housing seals were discarded, install new seal, lip first, into each housing. Press seal in until it is flush with housing. *Reversing lip of seal will allow leakage between by-pass and main coolant flow. Do not press seal into by-pass passage.*
2. Insert thermostats in housing counterbore and through seals.
3. Position and secure new gaskets, thermostat housings and covers on cylinder head pads.
4. Position water by-pass pipe on water pump on left bank thermostat housing cover. Secure to water pump with hose connection and clamp to cover with capscrews, flatwashers and lockwashers.
5. Position and secure cross-over pipe and gaskets between thermostat housing covers.
6. Position and secure hoses on each thermostat outlet connection.
7. Fill cooling system, start engine and check for leaks.

WATER PUMP

C and J Naturally Aspirated

1. Loosen clamp and disconnect hose at water pump inlet connection.
2. Remove water pump belt.
3. Unfasten pump from gear housing.
4. Remove pump from engine by separating from water by-pass coupling and oil cooler connection.

Installation

1. Install new rubber O-rings on oil cooler connection and water by-pass coupling.
2. Lift pump into position and secure to gear housing.
3. Adjust belt tension.

C and J Supercharged

1. Disconnect hose at water pump inlet connection.
2. Remove oil cooler.
3. Unfasten pump from supercharger.
4. Disconnect pump from water by-pass coupling and remove from engine.
5. Remove capscrew holding oil cooler connection to pump and remove connection.

Installation

1. Assemble new rubber O-ring on oil cooler connection and attach connection to water pump.
2. Install new rubber O-ring on water by-pass coupling.
3. Attach pump to coupling and supercharger, using new gasket.
4. Install oil cooler.

H, NH and NT Engines

1. Remove fan from pulley.
2. Loosen adjusting screw and remove fan hub, pulley and belts.
3. If used, remove bell crank arrangement from rocker housing and compression release lever.
4. Loosen and remove capscrews holding fan bracket support to rocker housing. *The fan bracket on many engines is also a clamp ring to secure water pump. Loosen capscrews in clamp ring.*
5. Using a screwdriver in holes provided in water pump housing, turn water pump to lowest point of its eccentric to loosen water pump belt.
6. Remove pump belt, fan bracket and support.
7. Remove water pump from engine.

Installation

1. Place clamp ring and gasket on water pump.
2. Assemble drive belt on pump pulley and pump drive pulley.
3. Turn pump to low point of its eccentric and install in place. Secure lightly with capscrews and lockwashers.
4. Insert large screwdriver in holes provided in water pump. Turn water pump on its eccentric counter-clockwise to tighten belt.
5. Tighten capscrews in clamp ring.
6. Secure fan bracket support to rocker housing with capscrews and lockwashers.
7. Assemble belts over fan pulley and fan drive pulley.
8. Assemble fan pulley to water pump bracket. Avoid stretching belts; loosen adjusting screw until belts go into position easily.
9. Tighten adjusting screw to get proper tension on drive belts and tighten hub to bracket. Pack fan hub bearings with ball bearing grease.
10. Assemble fan and dirt exclusion plate to fan hub.

V6-200, V8-265 Engines

1. Remove fan from fan pulley.
2. Loosen generator adjusting link and remove generator drive belt.
3. With high mount fan, loosen fan drive adjusting screw and remove fan and pump drive belts.
4. Drain cooling system.
5. Remove lower hose from pump and loosen clamps on upper hose.
6. Remove all accessory lines from pump body.
7. Unfasten pump from block. Rotate pump housing to clear upper hose connection and lift out pump.

Installation

1. With new gasket, insert pump in block. Rotate pump to install upper hose and hose clamps. Secure pump in position.
2. Connect lower hose to pump.
3. With high mount fan, place fan and pump drive belts on pulley and draw to proper tension with fan drive adjusting screws.
4. Position generator belt on pulleys. Lift generator to obtain proper belt tension and secure with adjusting link and capscrew.
5. Install fan on pulley.
6. Connect accessory lines to pump. Close all drainage points, fill cooling system, start engine and check for leaks.

V8-350, VT8-430 Engines

1. Drain cooling system.
2. Remove capscrews securing pulley sheave to drive pulley. Unscrew sheave from pump shaft by turning counter-clockwise. Remove drive belt.
3. Disconnect all water hose connections.
4. Disconnect corrosion resistor hose from pump.
5. Unfasten and lift pump from block.

Installation

1. Install pump to block with new gasket.
2. Connect corrosion resistor hose to tee connection on pump.
3. Install all hose connections.
4. Place drive belt on water pump shaft and screw on pulley sheave. It may be necessary to turn engine with a bar to achieve proper belt tension. Secure sheave with capscrews and lockwashers.
5. Fill cooling system, start engine and check for leaks.

TURBOCHARGER

Service Note

All production model Cummins turbochargers are oil cooled. Removal and instructions given below apply only to the oil-cooled type.

Cummins turbochargers can be mounted in several positions. Although disassembly and rebuild procedures may vary slightly with each installation, the following precautions must be taken with all turbochargers.

1. Lubricating oil drain (large boss) must be down or within 45° of that position, Fig. 1
2. Never carry the weight of the exhaust piping on the turbocharger.
3. When turbocharger is dismounted, always cover inlet and outlet ports to prevent entrance of dirt.
4. Never stuff rags into ports.
5. Never use a caustic solution to clean any part of turbocharger.
6. Never use a wire brush to clean com-

pressor wheel, turbine or diffuser plate.
7. Never attempt to disassemble, repair or alter a turbocharger in any way. Your Cummins dealer is equipped with the proper tools to rebuild Cummins turbochargers.

J and C Engines

1. Remove oil lines connecting turbocharger to oil cooler and oil pan.
2. Disconnect hose from turbocharger to intake manifold.
3. Loosen and remove capscrews and lift off turbocharger.

Installation

1. Install gasket and lift turbocharger into position against exhaust manifold and secure.
2. Secure bracket between turbocharger and oil cooler (rear mount fastens to clutch housing).
3. Install oil flow regulator valve in oil cooler (if used). With rear mount units, the regulator is installed in an elbow in the oil transfer connection.
4. Install oil supply line between regulator valve and turbocharger.
5. Connect turbocharger oil drain line (large) to crankcase.
6. Assemble and tighten air inlet and outlet piping to turbocharger.

H, NH, NT Engines

1. Disconnect oil lines.
2. Loosen intake and discharge air connections.
3. Unfasten and remove turbocharger from its mounting bracket and exhaust manifold.

Installation

1. Install gasket and turbocharger to exhaust manifold.
2. Secure mounting bracket to turbocharger casing.
3. Connect oil inlet line from top of turbocharger to oil cooler or rear of block.
4. Connect oil drain line from large boss on side of turbocharger to crankcase.
5. Install hose from blower outlet to intake manifold connection.
6. Install air cleaner and exhaust piping.

V8-350, VT8-430 Engines

1. Remove glow plug electrical leads and fuel lines to preheater nozzles from both air intake connections between rocker cover and turbocharger.
2. Remove aneroid control air line from left bank intake manifold connection.
3. Remove capscrews securing connections to rocker covers. Rotate and remove air connections from both banks. Discard O-rings.
4. Disconnect connection between air cleaner and turbocharger at turbocharger air intake.
5. Remove connection from exhaust outlet of turbocharger.
6. Remove V-type clamp rings attaching exhaust manifolds to turbocharger exhaust intakes.
7. Unfasten and remove turbocharger from accessory support cover.

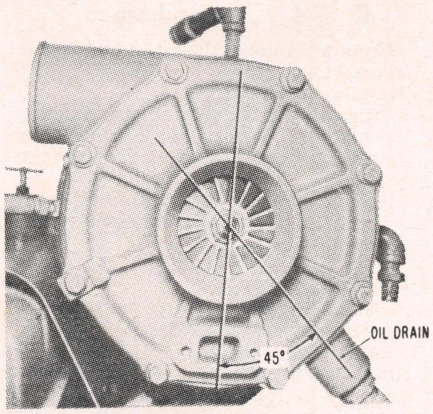

Fig. 1 Oil drain position for turbocharger

Installation

1. Secure turbocharger with new gasket to accessory support cover. *Make sure oil supply and drain holes to turbocharger are open.*
2. Connect exhaust manifolds to turbocharger exhaust inlets and secure V-type clamp rings.
3. Install connection on turbocharger exhaust outlet.
4. Install connection from air cleaner to turbocharger air intake.
5. Install new O-rings on air crossover.
6. Insert air outlet connection in turbocharger and secure to each rocker cover with capscrews.
7. Connect fuel lines to preheater nozzles in each air intake connection.
8. Connect electrical leads to each glow plug.
9. Connect aneroid control air line.

SUPERCHARGER

In Line Engines

1. Remove capscrews which secure air connection to intake manifold. Using a screwdriver, pry springs from supercharger connection at the outlet. Cover connection opening in supercharger to prevent entrance of dirt.
2. Remove heat shield and supercharger outlet.
3. Remove oil filler tube and cover plate from cylinder block.
4. Disconnect and remove lubricating oil supply and drain lines from supercharger and hand hole covers.
5. While supporting supercharger, remove capscrews from supercharger and engine.
6. Disengage supercharger coupling from drive unit and lift off engine. *NHHS superchargers are flange mounted to gear case and cover.*

Installation

1. Keep ports covered at all times before final assembly of inlet and outlet ends of manifold to supercharger. Masking tape may be used.
2. Assemble inlet and outlet connections to supercharger. Use hug-nuts and flatwashers to secure connections in place.
3. Lift supercharger to engine and engage coupling to drive unit.
4. Start upper left and lower right bolts to support supercharger.
5. Start and tighten upper right and lower left support bolts. The corresponding bolt holes in the supercharger are reamed to fit support bolts snugly.
6. Tighten remaining support bolts. *Do not overtighten as the housing may be distorted causing the rotors to scrape.*
7. Place rubber buffer in generator drive coupling and mount generator.
8. Install lubricating oil supply and drain lines to supercharger and hand hole covers.

OIL COOLER

Service Note

When cleaning the cooler, do not use solvent that is harmful to copper. Do not use mechanical cleaning methods such as scraping. Finish cleaning by blowing through bundle with compressed air. Clean the housing with solvent and compressed air.

C and J Engines

1. Disconnect oil and water lines and electric units from oil cooler.
2. Unfasten and remove cooler from engine.
3. Remove front cover.
4. Discard gaskets and O-rings.
5. Insert two $\frac{5}{16}$" capscrews in tapped holes at end of cooler element. Pull element with capscrews.

Installation

1. Lubricate O-ring and insert in bottom of housing.
2. Install element, aligning "O" marks on housing and element.
3. Place new front cover O-ring and gasket on housing.
4. Install front cover and secure with capscrews.
5. Place new gaskets on block, position oil cooler on block and secure with lockwashers and capscrews. Use new gaskets and O-rings on water pump connection.
6. Connect water and oil lines removed from cooler.

H, NH, NT Engines with Non Oil-Cooled Pistons

1. Disconnect water inlet and by-pass connection from oil cooler and cylinder heads.
2. Remove external oil inlet and drain lines (if used).
3. Unfasten and remove cooler from cylinder block.
4. Remove steel retainer ring.
5. Insert capscrews in tapped holes provided in element and pull element from housing.

H, NH, NT Oil-Cooled Piston Engines

1. Repeat Steps 1 and 2 above.
2. Unfasten and remove cooler from support.
3. Remove steel retainer ring.
4. Unfasten and remove cooler support from block.

Installation

1. Lubricate new O-ring and install at bottom of oil cooler housing.
2. Push element into housing, aligning "O" index marks. Remove capscrews used for insertion.
3. Install new O-ring on top of element.
4. Place steel retainer over O-ring. Install new gasket over steel retainer.
5. On oil cooled piston engines only, install new gasket to block. Install oil cooler support to block.
6. Install oil cooler.
7. Install external oil inlet and drain lines (if used).
8. Connect water inlet and by-pass connections from cylinder head to cooler.

V8-350, VT8-430 Engines

1. Drain cooling system.
2. Remove hoses and clamps from water inlet and outlet connections.
3. Unfasten and remove oil cooler from engine.
4. Remove connections from cooler.

Installation

1. Place new gaskets at each end of bundle and install connections.
2. Install bundle and connections to engine.
3. Install inlet and outlet hose.
4. Fill cooling system, start engine and check for leaks.

FUEL PUMP

C, J, H, NH, NT Engines

The fuel pump is flange-mounted to the accessory drive on the gear housing or to the rear of the air compressor.

1. Remove fuel line connecting fuel pump and inlet manifold.
2. Disconnect fuel pump inlet and drain lines.
3. If engine is equipped with aneroid control, disconnect two lines from aneroid to fuel pump.
4. Disconnect throttle linkage.
5. Unfasten and remove fuel pump from engine. Remove rubber coupling from drive unit.

Installation

1. Install new gasket, rubber buffer and fuel pump.
2. Connect pump drain and inlet lines.
3. Install fuel line from pump to fuel inlet manifold.
4. Connect throttle linkage to pump.

V6-200, V8-265 Engines

1. Loosen hose clamps securing air intake hose connections to air crossover pipe.
2. Disconnect air compressor intake line from air intake crossover pipe.
3. Disconnect preheater electrical leads and fuel lines.
4. Unfasten and lift off air crossover pipe from valve covers.
5. Remove fuel supply line from fuel pump shut-down valve to fuel supply crossover.
6. Remove fuel inlet line at fuel pump gear pump.
7. Disconnect electric wire from fuel shut-down valve.
8. Disconnect throttle linkage.
9. Unfasten and remove fuel pump from accessory drive housing or air compressor.

Installation

1. Install fuel pump with new gasket and coupling in position.
2. Connect throttle linkage.
3. Connect electrical wire to fuel shut-down valve.
4. Connect fuel inlet line to fuel pump gear pump.
5. Connect fuel supply line to fuel pump shut-down valve.
6. Install air intake crossover pipe and new gasket to valve covers.
7. Connect air compressor air intake line to air crossover pipe.
8. Connect preheater electrical leads and fuel lines.
9. Secure air intake hose to air crossover pipe.
10. Start engine and check for leaks.

V8-350, VT8-430 Engines

The fuel pump is mounted to the accessory support cover and is driven through a spider coupling. The feet supporting the fuel pump are dowelled in place by two ring dowels. Alignment with the drive coupling is made by adjusting shims between the fuel pump mounting pads and the feet.

1. Remove generator adjusting link capscrew. Lower generator and remove belt. Rotate generator outward to clear fuel pump.
2. On turbocharged engines, disconnect fuel oil by-pass line to aneroid control. Disconnect fuel oil suction line at gear pump, and fuel supply tube at fuel shut-down valve.
3. Disconnect throttle linkage.
4. Unfasten and lift off fuel pump. *Do not lose adjusting shims.*

Installation

1. If a new or exchanged pump is being installed, make certain the rubber coupling buffer work freely with a minimum of $\frac{1}{16}$ inch end clearance to prevent binding during operation.
2. Unfasten and remove pulley spider to accessory drive pulley. Remove shims.
3. Mount fuel pump on accessory cover support.
4. Attach dial indicator to accessory drive pulley; place dial arms on pump spider.
5. Turn engine with a bar and make indicator readings at four equidistant points on pump spider. Note reading and select shims to be installed between spider and accessory drive pulley as necessary to bring alignment with .010".
6. Remove pump and dial indicator. Replace pulley spider, using shims selected in Step 5.
7. Position fuel pump on mounting pads. Insert shims under pump mounting feet as needed for alignment. Secure pump with capscrews.
8. Connect throttle linkage, all fuel lines and tubing.
9. Rotate generator inward to position drive belt on pulley. Secure to proper belt tension with adjusting link and capscrews.

ANEROID CONTROL

In Line Engines

1. Disconnect flexible line from aneroid to fuel pump on pressure side of gear pump.
2. Remove flexible line from aneroid to fuel pump at inlet side of gear pump.
3. Remove air vent line (if used).
4. Remove air pressure hose.
5. Remove aneroid and bracket.

Installation

1. Mount aneroid and bracket as a unit as near fuel pump as possible.
2. Install fuel pressure line from gear pump to "In" connection on aneroid control.
3. Install return line from "Out" connection on aneroid control to "T" connection at suction side of gear pump.
4. Install line from top of aneroid to air intake manifold. *Use No. 5 size flexible hose between aneroid and fuel pump and No. 4 size between aneroid and air intake manifold.*
5. Install vent line (if used). *Current aneroids are equipped with air filters in place of air vent line.*

V8-350, VT8-430 Turbocharged Engines

1. Remove air pressure line from top of aneroid control.
2. Remove fuel oil line from side of aneroid control. *Cover all fuel and air openings with tape.*
3. Unfasten and remove aneroid and mounting bracket from end of air compressor.
4. Separate aneroid from bracket.

Installation

1. Secure bracket to aneroid control.
2. Mount aneroid and bracket to air compressor.
3. Remove tape from openings. Connect air pressure line to top and fuel oil line to side of aneroid control.

AIR COMPRESSOR

In Line Engines With Cummins Unit

1. Remove capscrew securing accessory drive pulley to compressor crankshaft.
2. Using puller, remove pulley from crankshaft. *Replace capscrew in end of crankshaft to prevent damage to threads.*
3. Remove pulley key.
4. On internal oil line engines only, remove oil slinger from crankshaft before proceeding.
5. Remove fuel pump.
6. Disconnect all air, water and oil lines from compressor.
7. Unfasten and remove compressor from engine. *Do not lose coupling retainer plate and rubber buffer from fuel pump end of crankshaft.*

Installation

1. Install compressor to gear case, using new gasket. *Timing marks on camshaft gear and compressor drive gear must be indexed.*

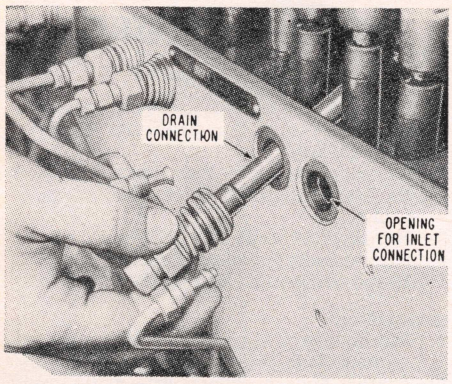

Fig. 2 Removing fuel drain connection

2. Connect air, water and oil lines to compressor.
3. If removed, install coupling retainer plate and rubber buffer on fuel pump end of crankshaft.
4. Install fuel pump, using new gasket.
5. On internal oil line engines, slide oil slinger on crankshaft.
6. Install accessory drive pulley key in crankshaft.
7. Remove large capscrew from end of crankshaft. Install pulley on crankshaft and secure with capscrews.

In Line Engines with Bendix-Westinghouse Unit

1. Remove fuel pump.
2. Disconnect oil inlet line from air compressor drive and fuel pump flange.
3. Remove oil drain tube from bottom of compressor. Disconnect water inlet and outlet tubes, and air outlet tubing from compressor.
4. Unfasten and remove compressor and splined coupling.

Installation

1. Assemble splined coupling to compressor. Assemble air compressor to accessory drive, using new gasket. Install and tighten capscrews.
2. Attach compressor support to block.
3. Connect all water, air and oil lines, or tubing.
4. Install fuel pump.

J-4 Engines

1. Disconnect oil supply line.
2. Unfasten compressor from bracket and slide compressor to disengage belt.
3. Lift compressor from bracket. Remove and discard gasket if damaged.

Installation

1. Assemble gasket on bracket and mount compressor on bracket.
2. Assemble mounting bolts. Tighten bolts when adjusting belt.
3. Connect oil supply line.

V6-200, V8-265 Engines

1. Drain cooling system.
2. Remove air intake tube from air crossover pipe and air compressor.
3. Remove fuel pump.
4. Remove water intake and outlet tube from air compressor.
5. Disconnect air compressor air pressure line.
6. Unfasten and remove air compressor.

Installation

1. Position new gasket on air compressor mounting flange. Slide compressor in gear housing, making sure gears mesh properly.
2. Position accessory drive cover plate with new gaskets to gear housing.
3. Secure cover plate and compressor with capscrews.
4. Connect water inlet and outlet tubes to compressor.
5. Install fuel pump.
6. Connect all compressor air inlet and outlet lines.
7. Fill cooling system. Start engine and check for leaks.

V8-350, VT8-430 Engines

The complete air compressor, including the drive, cannot be removed while the engine is in the chassis. However, removal of the crankcase assembly (the compressor unit most often exchanged) is easily accomplished.

1. Remove turbocharger intake connection.
2. Drain cooling system.
3. Remove lubricating oil filter. *Cover turbocharger intake opening and oil filter connections in accessory support cover with masking tape to prevent entrance of dirt.*
4. Remove aneroid control.
5. Disconnect all air and water lines from compressor.
6. Unfasten and remove air compressor cover and bracket with aneroid attached.
7. Remove capscrew, lockplate and spacer securing counterweight to compressor crankshaft.
8. Separate lockplate and spacer from capscrew and reinstall capscrew a few threads. This will provide a support for the forcing screw on a counterweight puller.
9. Position counterweight puller against compressor crankcase and secure by installing two $\frac{5}{16}$" capscrews at least 3 inches long through puller and into tapped holes in counterweight. Pull to remove weights and key from housing.
10. Remove capscrews securing crankcase to support. Slide off crankcase and connecting rod assembly from support and crankshaft.

Installation

1. Turn engine with a bar to a position that will allow the compressor rod to match the compressor crankshaft throw. *This usually is bottom center.*
2. Slide compressor crankcase over crankshaft to support. Secure with capscrews. *Care should be taken during assembly not to damage rod bearing.*
3. Install counterweight over key and crankshaft (counterweight is a light, close fit). Secure in position with spacer, lockplate and capscrew. Bend lockplate over capscrew.
4. Position air compressor cover with new gasket and aneroid mounting bracket to compressor and secure with capscrews.
5. Connect all air lines and water tubes to compressor.

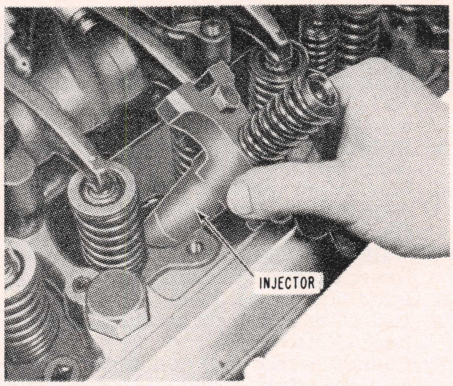

Fig. 3 Installing injector

6. Install lubricating oil filter.
7. Install turbocharger intake connections.
8. Install aneroid control valve.
9. Fill cooling system and check for leaks.

INJECTORS

In Line Engines

1. Unfasten and remove rocker cover from rocker housing.
2. Remove fuel inlet and drain lines to injector connections.
3. Remove fuel inlet and drain connections from injector body. Fig. 2.
4. Loosen injector locknut and unscrew adjusting screw until push tube can be disengaged.
5. Disengage push tube and tip rocker lever back until injector can be removed. Remove hold-down capscrews and lift injector from cylinder head, Fig. 3. *Do not bruise injector tip. Do not turn injector upside down as plunger can fall out and be ruined.*

Installation

1. Wrap a clean cloth around wooden stick and clean the copper injector sleeve. *Never use a screwdriver or any metal object for cleaning sleeve.*
2. Install same type injectors as removed. Place injector in its proper position in cylinder head, being careful not to damage injector tip.
3. Start, *but do not tighten,* injector hold-down capscrews.
4. In order to align injectors before tightening hold-down capscrews, screw in inlet and drain connections about three turns.
5. Oil injector hold-down capscrews and tighten to the torque value listed in the specifications table. *Excessive tightening will distort valve seats and crack cylinder head.*
6. Tighten inlet and drain connections to 20/25 ft. lbs.
7. Assemble injector rocker lever to injector push tube.
8. Adjust injectors and valves as outlined in the *Adjustment Section* of this chapter.
9. Install rocker lever cover.

V6-200, V8-265 Engines

1. Loosen hose clamps securing air in-

take hose connections to air crossover pipe.
2. Disconnect air compressor intake line from air intake crossover pipe.
3. Disconnect preheater electrical leads and fuel lines.
4. Remove air crossover pipe from valve covers.
5. Remove valve cover.
6. Back off injector adjusting screw until clear of push rod. Push injector rocker lever down and slide push rod to one side, then tilt lever back to clear injector link.
7. Remove injector hold-down clamp.
8. Pry injector from cylinder head. Remove O-rings and discard.

Installation

1. Make certain injector is clean and that cup is tightened properly. Filtering screen must be in place with no gaps or holes.
2. Make certain copper sleeve in cylinder head is free of chips and carbon particles.
3. Install new O-rings in injector body.
4. Lubricate O-rings with Lubriplate. Do not use lubricating or fuel oil.
5. Start injector into bore, guiding it by hand until injector is aligned in bore and not binding in any manner.
6. Place hammer handle butt on injector body and seat injector by giving it a quick, hard push on the hammer. A "snap" should be heard and felt as the cup seats in the copper sleeve.
7. Install hold-down clamp and capscrew; tighten capscrew to 12/15 ft. lbs.
8. Depress injector plunger with screwdriver by pushing down on plunger top and slip injector rocker lever in place. *The plunger link and cup on rocker lever must be engaged, and the rocker lever adjusting screw must seat into the push rod socket properly or the injector cannot be adjusted correctly.*
9. Adjust injectors as outlined in the *Adjustment Section* of this chapter.
10. Install valve covers with new gaskets.
11. Install air intake crossover pipe.
12. Connect air compressor air line to air crossover pipe.
13. Connect preheater electrical leads and fuel lines.
14. Secure air intake hose to air crossover pipe.
15. Start engine and check for leaks.

V'-350, VT8-430 Engines

1. Remove air pipes from rocker housing cover.
2. Remove vent tubes from crankcase breather.
3. Remove rocker housing covers, and heat shield (if used).
4. Remove spring clip securing spacer halves to rocker shaft, and remove spacer halves.
5. Back off injector adjusting screw and slide injector rocker lever to one side.
6. Remove injector hold-down clamp.
7. Pry injector from cylinder head, being careful not to bruise tip.

Installation

1. Lubricate O-rings with Lubriplate (not lubricating or fuel oil).
2. Start injector into bore, guiding it by hand until injector is aligned in bore and not binding in any manner.
3. Place hammer handle butt on top of injector plunger guide and seat injector by giving a quick hard push on the hammer. A "snap" should be heard and felt as the cup seats in copper sleeve.
4. Install hold-down clamp and torque capscrew to 12/15 ft. lbs.
5. Depress injector plunger with screwdriver by pushing down on plunger top. The injector rocker lever can then be slipped into location. *The plunger link and cup on rocker lever must be engaged, and the rocker lever adjusting screw must seat into push rod socket properly or the injector cannot be adjusted correctly.*
6. Install spacer halves and secure with spring clip.
7. Adjust injectors as outlined in the *Adjustment Section* of this chapter.
8. Position rocker housing covers with new gaskets, and heat shields (if used), and secure with capscrews.
9. Install crankcase breather vent tubes.
10. Install air pipes to rocker covers.

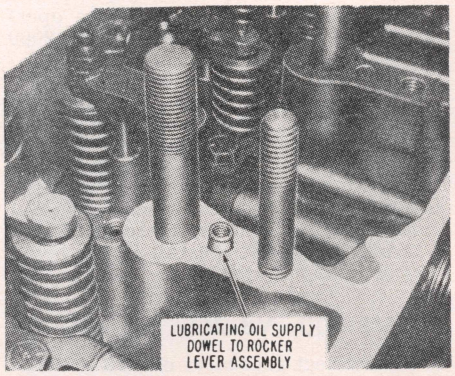

Fig. 4 Oil transfer dowel. C and J Series engines

CYLINDER HEAD

C and J Series Engines

1. Remove rocker lever cover and gasket.
2. Remove intake and exhaust manifolds.
3. If generator is high-mounted, disconnect wiring and remove generator with bracket from cylinder head.
4. Disconnect rubber hose, remove two capscrews, and remove thermostat housing from cylinder head.
5. Remove fuel supply and drain manifolds.
6. Disconnect water tubing from cylinder head.
7. Remove injectors as described above.
8. Loosen all cylinder head capscrews. Remove the seven center (long) capscrews and, temporarily in their place, insert the seven short capscrews. These capscrews will act as a guide in removing rocker lever assembly.
9. Loosen injector plunger adjustment, but let the valve adjustments stand. By not loosening the valve adjustments, it will be easy to turn over the engine when reassembling.
10. Remove four capscrews and three stud nuts holding rocker lever shaft bearings to cylinder head. Using a bar or wooden slat to keep levers in position, lift and remove rocker lever assembly.
11. Remove push tubes from engine.
12. Attach a lifting fixture to cylinder head and to a hoist and remove head from block.
13. Remove head gasket, rubber grommets and brass ferrules and discard them all.

Installation

1. Wipe surface of block with clean, lint-free rag to be sure that no dirt is present.
2. Inspect gasket on both sides to be sure it is clean, and that grommets are not creased. Place gasket on block with "Top" stamp up.
3. Install 24 rubber grommets and the 24 brass ferrules. *The brass ferrules are very thin. Use great care to be sure that only one ferrule is installed over each rubber grommet. If a ferrule is crimped or bent, discard it and install another one.*
4. While head is suspended in air with hoist, and just before lowering it into position, wipe the under-surface with a clean, lint-free rag to be sure that no dirt is present and that excess oil is removed.
5. Lower head into position, guiding it over pilot studs. Lower it slowly so that both ends touch the gasket at the same time and so ferrules and grommets are not disturbed. Remove lifting fixture and hoist.
6. Install push tubes; the largest in diameter is the center or injector push tube.
7. Using a bar or wooden slat to keep the levers in position and the short head capscrews as guides, lower the rocker lever assembly into position. Be sure that the two end studs and the center oil supply dowel are in position on the head, Fig. 4.
8. Remove short head capscrews and install in proper place. Install long capscrews through rocker lever bearings.

NOTE—After the first step in torquing the head, check all rocker levers to be sure that they are free. The end bearings and the center bearing are dowelled into position, but the intermediate bearings are not. These bearings may shift to the extent that the rocker levers will bind on the shaft when the head is tightened. Tighten head as follows:

9. If $\frac{11}{16}$" studs or capscrews, tighten to 280-300 lb. ft. torque. If $\frac{3}{4}$" studs or capscrews, tighten to 380-400 lb. ft. torque. Tighten in rotation shown in Fig. 5. Tighten in rotation the first time around to 25 lb. ft.; second time around to 100 lb. ft.; third time around to the recommended final torque values.
10. Install rocker lever sapscrews and stud nuts and tighten securely.
11. Install injectors.
12. Adjust injector plungers, the valves as described in the *Adjustments Sec-*

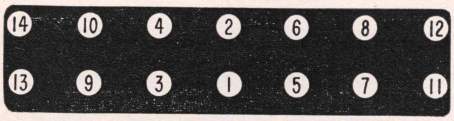

Fig. 5 Cylinder head tightening sequence on C and J Series engines (11/16" 280-300 lb. ft.; 3/4" 380-400 lb. ft.)

tion of this chapter.

13. Connect water tubing, fuel supply and drain manifolds, thermostat housing and generator.
14. Install intake and exhaust manifolds. Tighten capscrews and stud nuts beginning at the center and working toward the ends. Tighten exhaust manifold capscrews to 22 lb. ft. in two steps, alternating from top to bottom.
15. Complete the installation by installing rocker lever cover, air piping, electric wiring, water piping and other units removed.

H, NH, NT Engines

1. Remove supercharger outlet connection.
2. Remove fuel connection from intake manifold.
3. Remove intake manifold connection. *Inlet and outlet connections should be kept covered with plates or masking tape to keep out dirt.*
4. Remove intake and exhaust manifolds.
5. Remove water manifold.
6. Remove rocker housing covers.
7. Remove lubricating oil pipe cap and gasket.
8. Remove rocker lever assembly.
9. Remove push rods.
10. Remove fuel lines, fuel inlet and drain connections, and injectors. *Place injectors and inlet connections in proper order on work bench so they will be returned to their original positions.*
11. Remove cylinder heads.

Installation

1. Make sure that cylinder heads on naturally-aspirated engines have the top breather hole open. Supercharged and turbocharged engines must have this breather hole plugged with a 1/8" pipe plug. The breather hole is located at the top of the cylinder head between the center stud holes.
2. Wipe mating surfaces on head and block clean.
3. Install cylinder head gasket with word "Top" to top over studs and oil pipes.
4. Examine oil pipe bore on milled surface of cylinder head for counterbore. If the head is counterbored at this point, install two leather seal washers on each seal oil pipe. If the counterbore occurs at the top surface of the head, install the two leather washers on the oil pipe after the heads have been placed on the block.
5. Oil cylinder head studs and nuts. Tighten each nut slightly in proper sequence as shown in Fig. 6. Continue to tighten in rotation until all nuts have been tightened to 430-450 lb. ft. After engine has been operated approximately 50 hours or 2000 miles, nuts should be retightened.
6. Install injectors and connections.
7. Insert push rods. The injector push rod is the largest and goes in the middle socket. The intake push rods have collars to match with the milled lift of the compression release.
8. On 4-valve engines, assemble crossheads with adjusting screws toward water manifold. Install rocker housing with new gasket.

V6-200, V8-265 Engines

1. Disconnect preheater electrical wires and fuel line from air crossover pipe.
2. Disconnect air compressor suction line from intake air crossover pipe and air inlet hose connections.
3. Drain cooling system.
4. Remove air crossover pipe.
5. Remove valve covers.
6. Loosen locknuts and back off all valve and injector rocker lever adjusting screws.
7. Secure rocker levers together with rubber bands.
8. Unfasten and remove rocker lever assemblies.
9. Remove push rods and crossheads.
10. Remove injectors.
11. Remove air compressor water outlet line.
12. Remove water crossover pipe.
13. Remove thermostat housing from right bank cylinder head.
14. Disconnect fuel supply line from fuel inlet crossover at rear of engine.
15. Disconnect fuel drain line from fuel drain crossover.
16. Remove fuel supply and drain crossovers from cylinder heads.
17. Remove exhaust manifolds.
18. Unfasten and lift off cylinder heads.

Installation

1. Install new head gasket with word "Top" up.
2. Install new O-rings on ring dowels in oil drain drillings. *Do not permit lubricating or fuel oil to come in contact with grommets.*
3. Position head on block over dowels. Lubricate washers and capscrews and secure head to block.
4. Install injectors, push rods, crossheads and rocker levers.
5. Torque head capscrews to 150 ft. lbs. in 50 foot-pound increments in the sequence shown in Figs. 7 and 8. Final tightening should be 155-160 ft. lbs.
6. Install exhaust manifolds.
7. Connect fuel supply and drain crossovers to cylinder heads.
8. Connect fuel drain line to fuel drain crossover.
9. Connect fuel supply line to fuel supply crossover.
10. Adjust injectors, crossheads and valves as outlined in the *Adjustment Section* of this chapter.
11. Install thermostat housing, water crossover pipe, valve covers, air intake crossover pipe, and connect air compressor air and water inlet lines.
12. Connect air inlet hose connections to air crossover pipe.
13. Connect preheater electrical wires and fuel lines to intake air crossover pipe.
14. Fill cooling system, start engine and check for leaks.

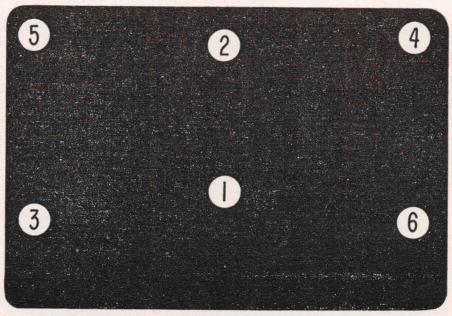

Fig. 6 Cylinder head tightening sequence on H and NH engines (430-450 lb. ft.)

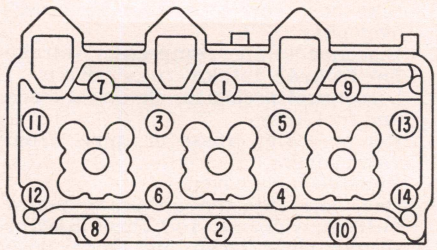

Fig. 7 Cylinder head tightening sequence. V6-200 engine

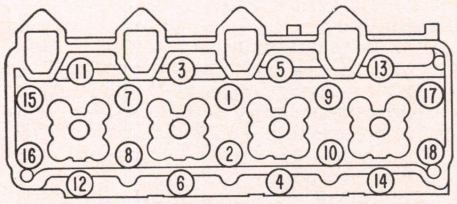

Fig. 8 Cylinder head tightening sequence. V8-265 engine

V8-350, VT8-430 Engines

1. Drain cooling system.
2. Remove intake manifolds, exhaust manifolds and rocker covers.
3. Loosen all injector and valve adjusting screws. Tie all levers together or secure with rubber bands to prevent separation.
4. Remove rocker lever assemblies.
5. Remove injectors.
6. Lift push rods from tappets.
7. Unfasten and lift off cylinder head, using a suitable hoist.

Installation

1. Four breather holes are drilled in the top of each cylinder head. On the right bank side two holes are located above No. 1 cylinder and two above No. 4 cylinder. On the left bank side two holes are located above No. 5 cylinder and two above No. 8 cylinder.
2. On naturally-aspirated engines the breather holes in line with the intake manifold ports *must* have ventilator

plug installed. The hole in line with the exhaust manifold port *must be plugged* with a 1/8" pipe plug.

3. On turbocharged engines all breather holes *must be plugged* with 1/8" pipe plug.
4. Place grommet retainers in water passages in block, *small end up.*
5. Lay gasket on flat surface and press grommets into place by hand. *Avoid all contact between grommets and fuel or lubricating oil to prevent damage.*
6. Install head gasket with word stamped 'Top" up. Be careful not to dislodge grommets as gasket is lowered over grommet retainers.

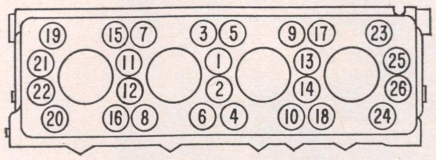

Fig. 9 Cylinder head tightening sequence. V8-350 and VT8-430 engines

7. Lower head into position.
8. Oil cylinder head capscrews and tighten each slightly in the correct sequence shown in Fig. 9.
9. Insert push rods in tappets.
10. Install injectors in cylinder head and torque capscrews to 12/15 ft. lbs.
11. Position rocker levers on cylinder head. Align all push rods to rocker lever adjusting screws. Secure with capscrews by tightening slightly.
12. Continue tightening in proper sequence and in 30 foot-pound steps until all capscrews have been tightened to 170/180 ft. lbs.
13. Adjust valves and injectors as outlined in the *Adjustment Section* of this chapter.
14. Install intake and exhaust manifolds and rocker covers.
15. Fill cooling system and check for leaks.

Unit Repair Section

ROCKER LEVERS

All Engines—If rocker lever bushings are worn larger than 1.1265", new bushings should be installed and bored to 1.1245-1.1255". The ball end of rocker lever adjusting screws must be true spheres. Test them with a 1/4" radius gauge. If worn flat they must be replaced.

The injector rocker lever sockets must be replaced if excessively worn. Wear is easily detected with a radius gauge or by a small protrusion at the bottom of the socket. These sockets must seal with injector links in the assembled engine to prevent loss of lubricating oil to the fuel oil drain.

C and J Series Engines

To disassemble, place the rocker lever assembly on the work bench and remove the dowel pins from each end bearing of the shaft. Remove all bearings and rocker levers from the shaft. Remove the socket end plugs from each end of the shaft.

When assembled, be sure all lubricating passages in rocker levers, rocker lever sockets, oil line dowel pin (center bearing) and rocker lever shaft are clean and unobstructed.

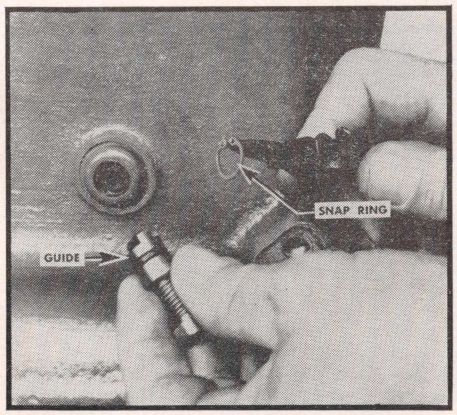

Fig. 1 Removing or installing tappet guides. C and J Series

H and NH Engines

To disassemble, remove the set screw that holds the rocker arm shaft to the housing. Remove the expansion plug at each end of the housing. Use a sharp pointed punch to drive through the plug on one end and drive the shaft through to force the second expansion plug out of the housing.

When an old style smooth shaft is replaced with new style grooved shaft, the position of the lock screw must be changed to the underside of the housing.

Any play of rocker lever rollers on pins is cause for replacement of pins. Rollers must be replaced if worn flat at any point or if the pin hole is worn beyond .346". Pins and rollers can be removed by grinding the peened end of the rivet and pressing out the rivet and pins with punches. Rocker levers must not be used if bored holes for rollers pins are distorted enough to throw the roller out of alignment with the shaft bushing.

PUSH RODS

C and J Series Engines

Each cylinder has three push rods, exhaust, fuel and intake. The intake push rods have a lift which coincides with the milled recesses in the compression release shaft. When the compression release lever is pulled upward, the intake valve is held open, permitting the engine to be cranked easily.

Check both ends of all push rods. The upper ball seat and the lower ball end must be true polished spherical contours. The upper end has a spherical inside diameter of .4995-.5005". The lower ball diameter is .685-.687" with a 1/8" diameter flat at the bottom. Replace rod if either end is worn or shows signs of scratching or galling.

H and NH Engines

Like the J engine, each cylinder has three push rods, exhaust, intake and fuel. The ball of a new fuel push rod is .748-.749" diameter and is ground to true spherical contour. If the end of the ball is worn flatter than .500" radius, it should not be used.

The lift or collar of intake push rods must not be so badly worn that there is danger of its not functioning with the compression release lever.

Test the sockets of push rods with the ball end of a new rocker lever adjusting screw or with a 1/4" radius gauge.

Extreme wear on either end of the push rod will result in loss of lubricating oil pressure and may interfere with proper valve and injector adjustment.

INJECTOR SLEEVES

All Engines—Injector sleeves must seal in the cylinder head to prevent water leaks. The injector seal must seal with the injector cup to prevent compression leaks. Special equipment, available through Cummins Dealers, is necessary for injector sleeve replacement.

VALVE SEAT INSERTS

All Engines—If inspection shows that valve seat inserts are loose, or if valve seats are wider than .125" and cannot be narrowed sufficiently, new inserts should be installed.

Remove old inserts with a valve seat puller or with a punch through the ports. Cummins service tools are available for

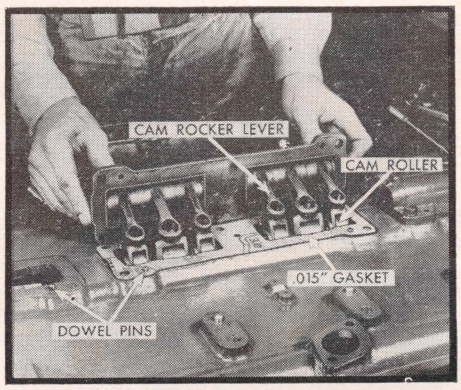

Fig. 2 installing cam rocker lever assembly. H and NH engines

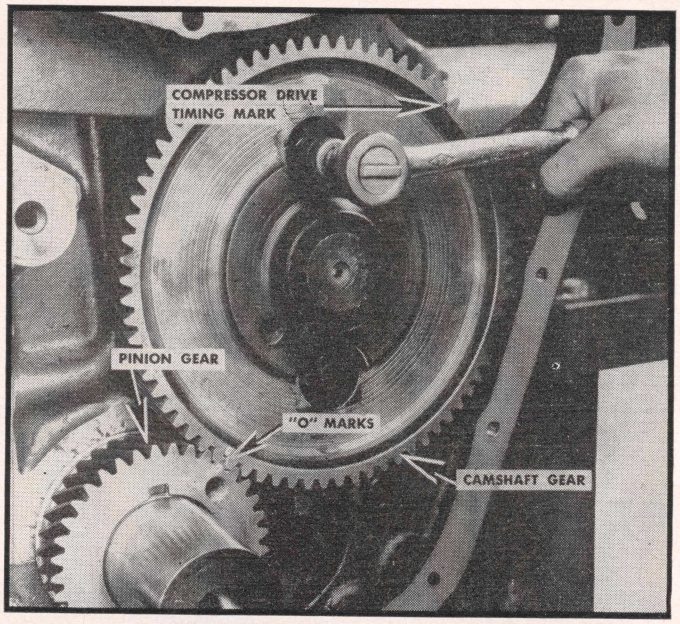

Fig. 3 Valve timing marks. C and J Series Engines

installation of new inserts. The counterbore must be enlarged for the next oversize. Cutters are available in sets for each engine.

Counterbores for valve seat inserts should be machined .006-.010" deeper than the insert height to permit peening of head to hold insert. A ¼" diameter roundend punch can be used to peen inserts. Avoid over-swaging around the inserts as this may cause a cast iron ring to be broken from the cylinder head.

Valve seats in standard and .005, .020, .030 and .040" oversizes are available.

VALVE GUIDES

All Engines—If valve guides need replacing they can be driven out from the underside of the head. New valve guides can be installed by pressing them in from above. Use a hardwood block or proper size mandrel to prevent distortion.

VALVE CROSSHEAD GUIDES

Four-Valve Engines

New crosshead guides are made to size and it is not necessary to remove any material. Check size with a new crosshead stem and if there is any binding, ream the guides to .3755-.376".

VALVE & INJECTOR TAPPETS

C and J Series Engines

The valve and injector tappets ride directly on the cam to operate valves and injectors. The tappets are guided through machined bores in the block. New valve tappet-to-bore clearance is .002". Injector tappet-to-bore clearance is .003".

The tappet bores are accessible through the push rod opening in the block.

The injector tappet guides, located in the side of the block and held in place by snap rings, are removed and installed by inserting a $\frac{5}{16}$"-18 capscrew as a means of removing and installing the guide, Fig. 1. The injector tappet is kept from turning by the guide which fits into the slot of the injector tappet. When installing injector tappet guides, place the rubber "O" ring in the groove of the guide and insert in the block. Lock the guide in place with a snap ring.

CAM FOLLOWERS

H and NH Engines

To disassemble the cam follower housing and levers, remove the set screws that hold the shafts in the housing. Drive out the expansion plugs, using a punch to drive through one plug and then drive the shaft through the housing to remove the other expansion plug.

If the shafts are worn smaller than .748", replace with new style ungrooved shafts. Gauge cam follower lever bushings. New or newly replaced and bored bushings must gauge .7495-.7505". If old bushings are worn larger than .7515", the levers must be rebushed with new style two-piece bushings. The two-piece bushings must always be used in combination with new style ungrooved shafts.

Since rollers of cam follower levers act directly on the camshaft lobes, it is extremely important that proper alignment of lever shafts, rollers and camshaft lobes be maintained. A small amount of misalignment will cause uneven and excessive wear on camshaft lobes, particularly of the injector cam lobe. If proper lever length is not maintained or restored in rebushing the levers, it will be impossible to time the engine properly.

Use a new gasket and assemble the lever and housing assemblies to the cylinder block. Secure with lockwashers and capscrews. A flat head screw and star lock washer must be used in the top middle hole of No. 1 housing to provide clearance for the compressor drive belt on NH Series engines.

When pressure is applied on cam follower levers, the lever rollers must bear evenly on the camshaft lobes. This alignment can easily be checked with Prussian Blue.

INJECTOR TIMING

H and NH Engines

The gasket thickness between the cam follower lever housing and the cylinder block regulates injection timing, Fig. 2. The reason is that the cam follower rollers do not ride directly over the top of the cam lobes. Pulling the levers away from the block (adding gasket) advances timing on right-hand engines, and vice versa. Use gaskets as needed to get the correct timing.

All H and NH engines should be timed with Cummins fixtures ST-300 which, among other components, includes two special dial indicators. Cummins Dealers have this fixture available for use along with complete procedure on how to use it to time the engine.

TIMING GEARS

C and J Series Engines

For correct valve timing, install the camshaft gear so the "O" mark on the cam gear indexes with the "O" mark on the crankshaft gear, Fig. 3.

The fuel pump is driven through the air compressor by the accessory drive gear. For this reason the accessory drive gear must be timed with the cam gear as follows, Fig. 4.

Remove the plug from the timing view hole in the gear case cover and, with the aid of a pencil light, assemble the accessory drive in place with the "O" mark on the gear matched with the center punch mark on the camshaft gear.

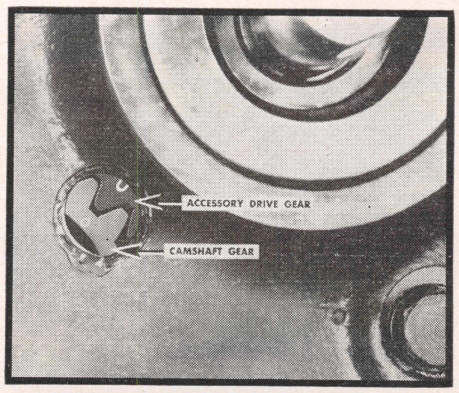

Fig. 4 Timing accessory drive gear to camshaft gear. C and J Series engines

H and NH Engines

All camshaft gears are marked with an "O" which indexes with the "O" on the crankshaft gear for correct valve timing. The camshaft gear also has a center punch, or dash marks, which index with the punch-marked tooth of the fuel pump or fuel pump drive gear.

Formerly the punch marks were 35 to 37 teeth from the "O" mark and all fuel pumps were installed at the No. 1-6 Top Center position.

Beginning with Engine Serial No. 72125, the punch marks were changed to dash marks and retarded 9 teeth. The dash marks are now located 26 teeth for right-hand engines or 28 teeth for left-hand engines from the "O" mark and in gear rotation direction. Check cam gear markings and, if the gear has the obsolete marking, remove the old center punch marks and make new dash marks 9 teeth back of the marks removed to agree with current gear marks.

SUPERCHARGER IDLER GEARS

J Series Engines

It should not be necessary to rebuild the supercharger idler gear assembly unless it has become noisy or loose, indicating broken leaf springs inside the assembly or worn bushings.

If necessary to disassemble, remove the six capscrews and the idler drive hub, blower gear, thrust washer and the spring retainer cover. Carefully pry and remove the 10 idler leaf springs, four spring retaining pins, and separate the idler driven gear from the spring retainer.

To repair the unit, replace all damaged leaf springs. Check the idler gear bushings and the three idler hub bushings. New idler gear bushings are 2.126-2.125" inside diameter with bushings pressed in place. New idler hub bushings are 1.501-1.500" inside diameter with bushings pressed in place. The idler gear shaft is 1.4985-1.4975" outside diameter. Check thrust washer for wear or galling.

Assemble in the reverse order of disassembly, using extreme care when installing the idler leaf springs as they could easily cause a serious injury if they are allowed to fly loose as they are forced between the gear cam and spring retainer, Fig. 5.

To install the assembly, place idler driven gear with its idler drive gear over the idler gear pin. Be sure the inner thrust washer is properly indexed to the three head bolts before assembling the gear on the journal. Fit the outer thrust washer to the gear hub and bring the cover washer in place by tightening the capscrew over the washer. The clearance between the thrust washer and gear should be .007-.019".

PISTONS

All Engines—Worn pistons should not be reused if the ring-to-groove side clearance with new rings is in excess of .006" when the outside surface of the new ring is flush with the adjacent ring land surface.

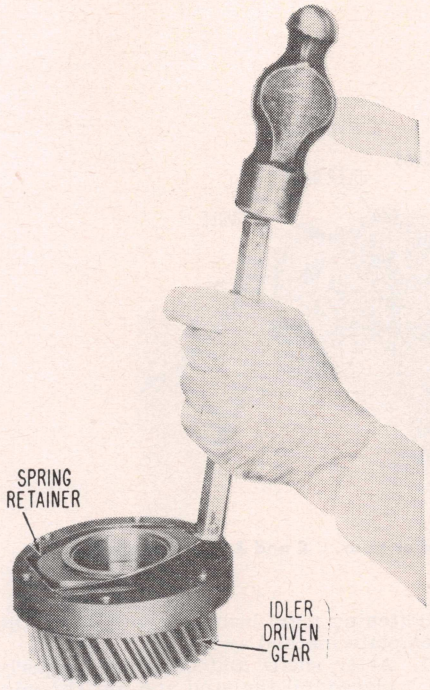

Fig. 5 Installing idler leaf springs in supercharger gear. J Series engines

Maximum piston diameter is measured at the piston skirt and at right angle to the piston pin. This dimension subtracted from the cylinder liner inside diameter gives piston-to-liner clearance.

Pistons are available in standard and .020, .030 and .040" oversizes.

Reboring of piston pin holes and use of oversize pins is not practical because the misalignment that results from such practice will cause seizure of piston or failure of connecting rod bearings.

Cummins pistons prior to Serial No. 88098 were equipped with injector cup wipers, or sneezers. The purpose of the sneezer is to provide better combustion and to prevent carbon from forming on the injector cup spray tip. The sneezer is screwed into the head of the piston. After Serial 88098 new aluminum pistons do not have the sneezer. Pistons with and without sneezers must not be mixed in any engine. The sneezer, if used, must be installed and locked with lock plate No. 60026. If the sneezer comes loose during engine operation, it will cause extensive damage.

CYLINDER LINERS

All Engines—Several types of failures can result when liners have been improperly installed, most serious of which would be scored liners and seized pistons. The following instructions should be carefully followed:

1. Make sure that all mating surfaces of liner and block have been thoroughly cleaned.
2. Place the liner, without packing rings, into the block. It should drop into position of its own weight. The liner must always seat freely in the block. Test liner-to-block clearance by shaking. If there is no detectable clearance, remove the liner and make sure both liner and block bore are perfectly clean. If necessary, scrape the block bores and counterbores until the liner does seat freely.
3. Check the clearance around the entire circumference of the block counterbore and the top liner flange with a .002" feeler gauge.
4. Check liner flange and counterbore depth in the block. Flange must be .004 to .006" above surface of block when assembled. Steel shims are available to obtain this protrusion. The shims are .002", .007", .008" and .009" respectively.
5. If the liner flange counterbore is not smooth or straight, the cylinder block should be sent to a Cummins Dealer Shop where a special counterbore tool can be used to straighten the bore before the shims are installed.
6. To install the liner, put on the rubber packing rings, being careful not to stretch them.
7. Lubricate the packing rings and the machined portions of the block on which the rings seat with clean lubricating oil or ball bearing grease.
8. Assemble the liner in the block and push it into place with hand pressure only. Check the liner at several points down the length of its bore with a dial bore gauge or inside micrometers to see that it has not collapsed due to being tightly fitted. New liners must not be out-of-round more than .001" when installed.

PISTON RINGS

All Engines—Each piston carries three compression and one oil ring. Be sure to use the type ring specified for the piston.

Piston ring gap is checked with the piston ring in its mating cylinder liner. It may be necessary to file the ends of the rings to obtain the minimum ring gap clearance during assembly.

Rings are available in standard and .020, .030 and .040" oversizes.

PISTON PINS

All Engines—Clearance of piston pins in new cast-iron pistons is a thumb push fit with parts at room temperature (70°). Aluminum pistons should be heated in boiling water before installing the pins.

ROD BEARINGS

Rod bearings are the precision shell type which must never be scraped or reamed. Undersize shells are available in .005 (JS), .010, .020, .030 and .040". Shells should not be reused if worn thinner than .071" on J engines or .070" on H and NH engines.

Cummins recommends tightening rod

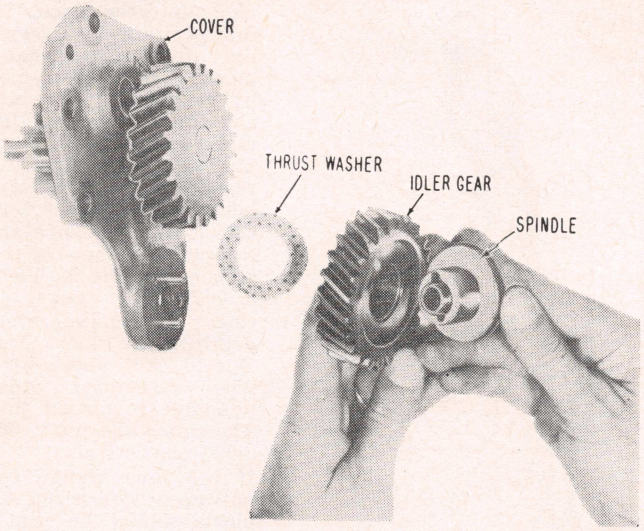

Fig. 6 Assembling spindle to oil pump idler gear. C and J Series engines

bearing cap nuts by the template method as follows:

C and J Series Engines

1. Oil threads and lock plates.
2. Tighten nuts on each side of both U-bolts alternately and in 5 lb. ft. increments to 25-30 lbs. ft. This torque is used to avoid permanent stretching of the bolts during the initial tightening.
3. Loosen nuts completely.
4. Retighten nuts alternately in steps of 5 lbs. ft. to 25-30 lbs. ft.
5. Draw a thin pencil line on each nut to coincide with the permanent marks on the cap. If caps are not marked, extend a line from one hex of each nut to the cap.
6. Advance each nut one hex or 60°. In order to prevent U-bolts from becoming misaligned, advance alternately in steps of 30° until 60° is reached.
7. Lock nuts in place.

H and NH Engines

1. Use new lock plates and oil the lock plates and threads.
2. Tighten nuts to 140 lbs. ft. This is not operating tension.
3. Back off nuts at least one full turn to release all tension.
4. Retighten the nuts to 50-55 lbs. ft. This should be done in two steps to insure even tightening.
5. Tighten each nut an additional 60°. This is equivalent to advancing the nut one hex face beyond the position obtained in Step 4.

MAIN BEARINGS

All Engines—New standard main bearing shells are .123-.12375″. Shells should not be reused if worn thinner than .1215″ or .002″. Undersize bearings are available in .010, .020, .030 and .040″.

Main bearings may be replaced in the conventional manner without removing the crankshaft. Cummins recommends tightening main bearing cap nuts by the template method as follows:

1. After shells and caps are properly placed, oil the stud and nut threads.
2. Install new lock plates.
3. Tighten nuts to 160 lbs. ft. on J engines or 320 lbs. ft. on H and NH engines. This step is only used to settle the shells, caps and lock plates.
4. Loosen nuts completely.
5. Retighten nuts to 30-35 lbs. ft. on J engines or to 140 lbs. ft. on H and NH engines.
6. Advance the nut 60° or one hex face from the snug position on J engines, or 30° or ½ hex face on H and NH engines. Tighten each side of the bearing a little at a time, bringing both sides up as evenly as possible. This is the operating tension.

CRANKSHAFT END PLAY

C and J Series Engines

The rear main bearing consists of two shells and four thrust half-rings. The thrust half-rings, like the shells, are interchangeable.

The thrust half-rings are held in place by dowels in the cap—two for each half-ring—and by counterbored recesses in the block and cap. The grooved babbitt faces fit next to the crankshaft flanges.

Crankshaft end clearances for new bearings and a new shaft will be .004-.009″. Worn shafts and thrust rings should not be reused if end clearance is in excess of .022″. Check end clearance as follows:

1. Attach a dial indicator securely to the cylinder block with the contact point of the gauge resting on the crankshaft flange end face.
2. With a small bar, pry the crankshaft toward the front of the engine and set the gauge at zero. Then pry the crankshaft toward the rear of the engine.
3. If the clearance is less than .004″, loosen the nuts slightly and shift the crankshaft first toward the front end of the engine and then toward the rear.
4. Retighten the nuts by the template method outlined previously and recheck the end clearance.

H and NH Engines

Procedure for checking crankshaft end play is similar to that outlined above except that the limits are .007″ to .013″.

CRANKSHAFT REAR OIL SEAL

All Engines—The rear cover has a braided asbestos seal around the crankshaft. When the rear cover is assembled to the cylinder block, its bore must be in line with the main bearing bore.

Cement a new gasket over the dowel pins on the rear of the cylinder block. Assemble the upper cover plate over the dowel pins and tighten the four capscrews. With the crankshaft pried toward the cover plate, check the clearance between the crankshaft flange and the opposing face of the cover plate. Clearance should be a minimum of .004″.

The .004 to .008″ (.004-.006″ on J) clearance can be obtained by the use of .005″ and .010″ gaskets to move the cover plates to or from the cylinder block.

The clearance between the crankshaft and bore of the cover plate should be .009 to .011″ (.006″ on H and NH) around the entire circumference. This clearance is provided when the original rear cover is installed at the factory and maintained by locating dowels. This can be checked after the old asbestos seal has been removed by using a .009″ feeler gauge between the shaft and upper cover.

Remove the cover plate and install new asbestos seals into the recess of both upper and lower cover plates. New seals must be beveled on three sides of each end, $\frac{1}{32}$″ by 45°, leaving the inside edge square. The ends of the seals should extend $\frac{1}{32}$″ above the joining surfaces of the cover plates. Seals should be soaked in lubricating oil an hour or more before installing. Make sure they are well seated in their grooves.

Cement new connecting gaskets to the lower cover plate. Assemble the lower plate to the upper plate and bolt together tightly. Install capscrews to cover plates and pull up evenly to the cylinder block over the dowel pins.

LUBRICATING OIL PUMP

C and J Series Engines

The lubricating oil pump is the gear type located in the crankcase below the crankshaft. It is driven by an idler gear off the pinion gear.

Excessively worn parts or assemblies must be replaced. Bushings and bodies should be replaced as assemblies because bushings must be properly located and line-bored.

When new, the pump parts have the following dimensions: Idler and driver shaft bushings .6165-.6175″. Idler and

driver shaft outside diameter .6150-.6155". Idler gear bushing .9925-.9935". Idler gear spindle .990-.991".

1. To assemble the pump, place the driver gear over the shaft with the marked end to the oil inlet side of the body.
2. Assemble the driver gear and shaft to the cover. Then press the drive gear to the shaft, leaving .002" clearance between gear and cover.
3. Assemble gasket and cover to pump.
4. Assemble spindle to idler gear, Fig. 6.
5. Assemble thrust washer with its locking lip matching the milled recess in the pump cover.
6. Assemble the idler gear and spindle to the cover. The spindle is dowelled to the cover with two dowels. These dowels are a press fit in the cover and should protrude approximately $\frac{5}{16}$" into the spindle.
7. Assemble the by-pass valve plunger, spring, spring retainer to the body with the clamp provided.

H and NH Engines

The standard oil pump in these engines is of the two-gear type. In servicing these pumps, note the following:

1. The ball bearing outer race must not turn in the ball bearing cage.
2. The gears must show no excessive wear, or be scored or otherwise damaged.
3. The drive shaft must be replaced if it has been turning in the inner race of the ball bearing; if it is worn smaller than .8735" where it bears against the bracket bushing, or if it is worn smaller than .8705" on the body end.
4. The bracket bushing should not be used if its inside diameter is worn larger than .887".
5. Idler pins should be replaced if worn smaller than .873".
6. Replace bracket or cover if finished surfaces are scored or visibly worn larger than 2.301" inside diameter. Maximum gear to pocket clearance should never exceed .008" or .004" on a side.
7. The by-pass valve in the body should not open below 75 lbs.
8. When assembling the pump, the pump gear should be pressed on the shaft so there is a clearance of .0015" between the gear and bracket.

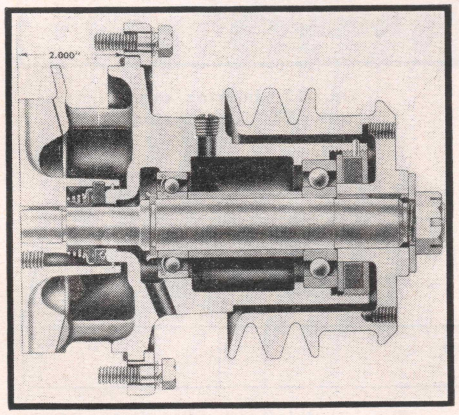

Fig. 9 Water pump. H and NH engines

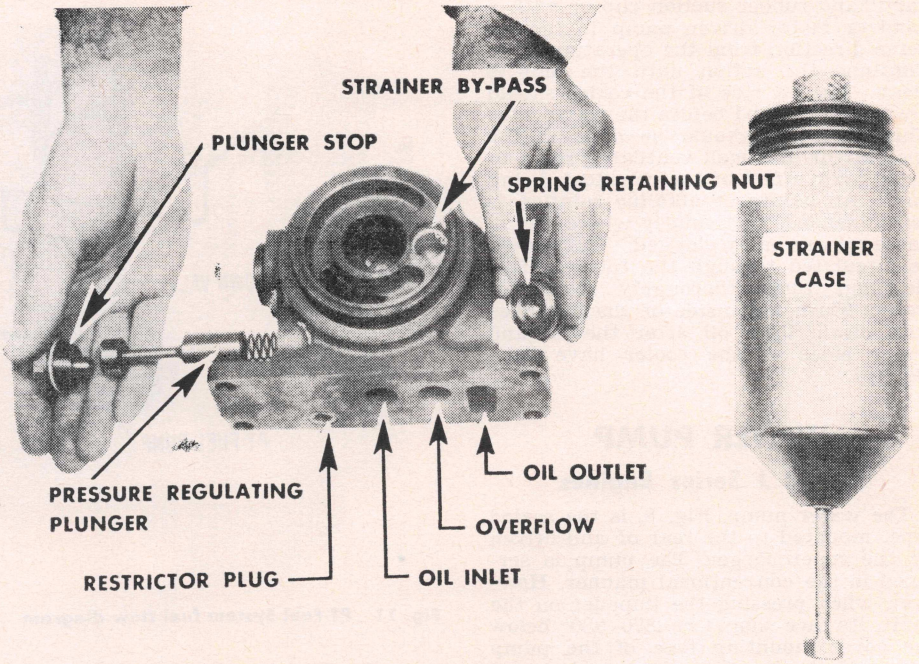

Fig. 7 Lubricating oil strainer head and pressure regulator. C and J Series Engines

LUBRICATING OIL PRESSURE REGULATOR

C and J Series Engines

The lubricating oil strainer head contains the lubricating oil pressure regulator, Fig. 7, and the strainer by-pass valve.

1. To disassemble, remove the large retaining nuts from each side of the strainer head, then remove the spring and plunger.
2. The pressure regulator maintains a constant lubricating oil pressure of 30-50 lbs. at governed speed.
3. Mark the plunger, plunger spring and retaining nuts to assure reassembly in the same order as removed. If the plunger is assembled backwards, oil pressure will build up to 125 lbs.
4. Check the regulating plunger for free action and for wear. The diameter of the plunger should be .740-.741". If worn smaller than .738", install a new plunger.
5. The regulating spring should compress to 1.620" at 13-lb. load.
6. The strainer by-pass valve opens when the strainer becomes dirty and clogged and allows unfiltered oil to pass through the system. The by-pass valve opens at 15 lbs. differential pressure. Check the by-pass valve spring, ball and ball seat to see that they are functioning properly.
7. The restrictor plug opens to the oil header and determines the position of the pressure regulator. Be sure the $\frac{1}{16}$" hole in this plug is clean and unobstructed.

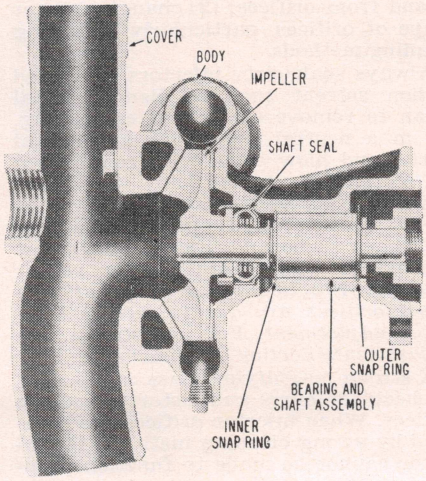

Fig. 8 Water pump. C and J Series Engines

LUBRICATING OIL COOLER

All Engines—To prevent hardening and drying of accumulated foreign substance, the core of the oil cooler should be cleaned as soon as possible after removing from service.

On tubular-type coolers, remove the oil by-pass valve and body from side of cooler. Then take off the front and rear cooler heads and gaskets.

If a plate-type cooler is used, remove the oil cooler cover and take out the core. Loosen the large hex nut from the cover and pull out the spring and plunger of the by-pass valve.

On the oil side of either type cooler, immerse the core in a container of carbon "tet" or some other suitable solvent. After the core has been allowed to stand in solvent for several minutes, force the cleaner through the tubes with an ordi-

nary hand rubber suction cup or with a hand or motor driven pump in the reverse direction from the operating flow. Continue the action until the unit is clean. The oil side of the cooler should always be cleaned before the water side. This operation should be done in the open air or in a well ventilated room to avoid toxic effect of the chemicals being used. An oakite or alkaline solution is recommended, particularly where the oil passages are badly clogged. This should be circulated through the tubes. After cleaning, flush thoroughly with hot water. Flush the inside of the oil tubes with clean, light oil after the oil and water sides of the cooler have been cleaned.

WATER PUMP

C and J Series Engines

The water pump, Fig. 8, is the sealed type, mounted to the rear of and driven by the supercharger. The pump is serviced in the conventional manner. However, when pressing the impeller on the shaft, its face should be .870-.880″ below the cover mounting face of the pump body. If the impeller is pressed on too far, it will lock.

When filling the housing with grease be sure to remove both plugs to prevent building up pressure inside the housing and damaging oil seals.

H and NH Engines

Fig. 9 shows the construction of a typical water pump used on these engines. It is serviced in the conventional manner. When the impeller is pressed on the shaft there should be a distance of 2.000″ from the inside surface of the pump body mounting flange to the outer face of the impeller as shown. Assemble seal and related parts in the order shown in Fig. 10.

INJECTORS

Fig. 11 illustrates a fuel flow diagram for the PT Fuel System, while Fig. 12 is a view of an injector. The injector is a simple mechanical unit which receives fuel from the fuel pump and injects it through the fine spray holes of the cup into the combustion chamber.

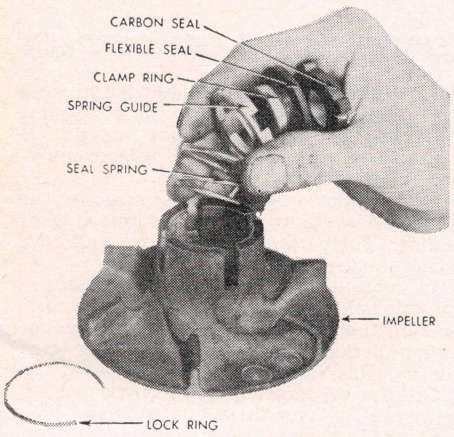

Fig. 10 Installing seal and related parts. H and NH water pump

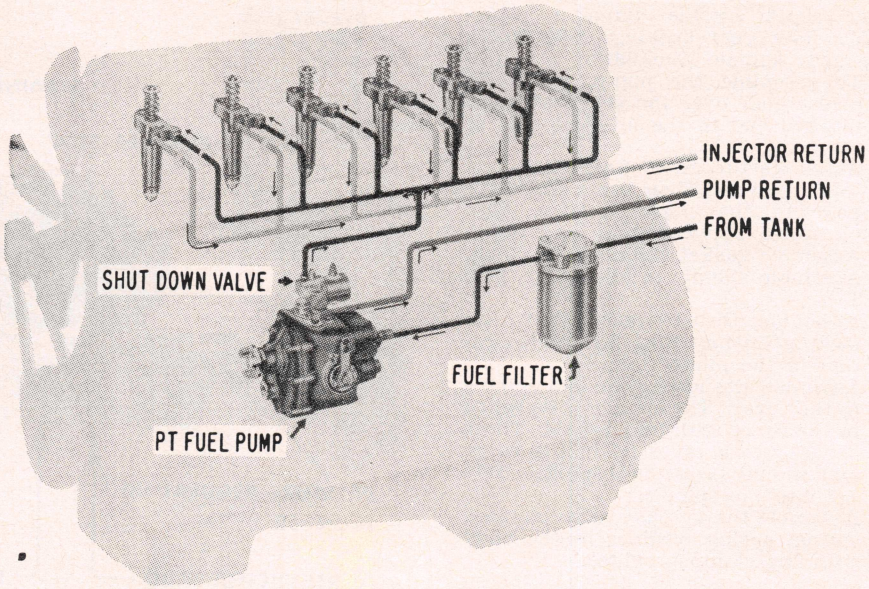

Fig. 11 PT Fuel System fuel flow diagram

While servicing injectors, never clamp the body in a vise as this practice usually causes distortion of the body and ultimately a sticking plunger. Use a holding fixture similar to that shown in Fig. 13.

Disassemble

Place injector in holding fixture, Fig. 13. Remove injector plunger retainer bail or screw. Remove injector cup.

Cleaning

In the PT system fuel metering is a dual function of the pump which regulates fuel pressure and the injectors which permit the metering orifice to be uncovered for an accurately controlled period of time. Any change in the *pressure, orifice or time,* will affect the amount of fuel delivered to the combustion chamber.

There are two things which will interfere with the normal functions of injector orifices: (1) dirt or carbon accumulation in the orifices or passages to and from orifices; (2) changing size or shape of orifices, particularly by wrong cleaning methods.

Always soak dirty injectors in a good carbon solvent such as Bendix Metal Clean to remove carbon. After soaking, dip in a neutral rinse such as mineral spirits and blow clean with compressed air. *Never use cleaning wires in orifices.* In a few cases engines have lost as much as 40% of their rated horsepower because of dirty or carboned orifices, and the lost horsepower was regained after proper cleaning. *Practically all cases of carboned orifices are due to incorrect injector adjustment.* For adjustment, see *Adjustments Section* of this chapter.

A strong magnifying glass can be used to check for burrs and distorted radii in orifices. When injector orifices are damaged by wrong cleaning methods, the injector cannot be made to function properly.

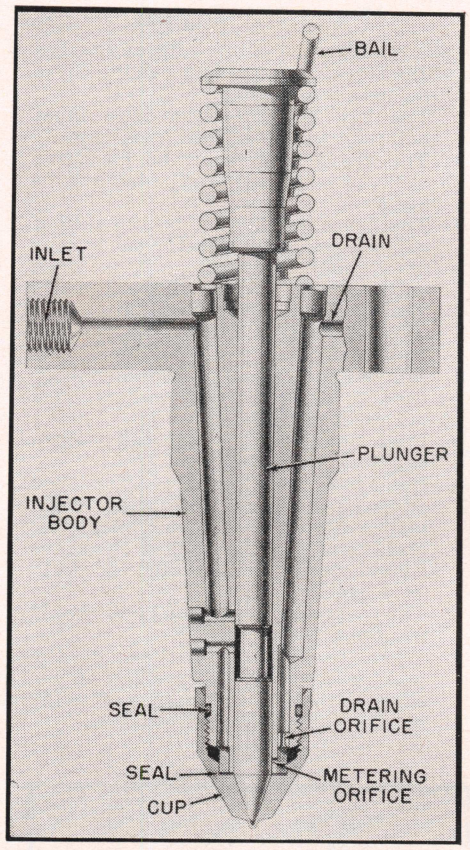

Fig. 12 Injector used with PT fuel system

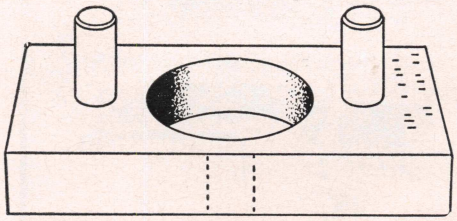

Fig. 13 Injector holding fixture

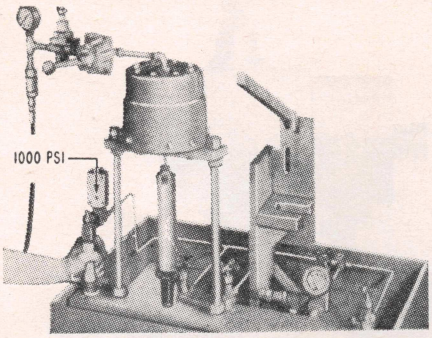

Fig. 14 Checking injector for leakage at plunger, using Cummins ST-272 injector test stand

Checking Injector For Wear

Worn injectors may cause dilution from excessive body-to-plunger clearance. It may occur as a result of a cracked injector body or cup, or from damaged "O" rings. A special injector test stand was developed by Cummins for testing injectors. In using the test stand, the procedure is as follows:

1. Assemble injector.
2. Plug off inlet and drain connection holes.
3. Mount injector in test stand, Fig. 14, with cup in bronze seat and with plunger lifted .045" off its seat.
4. Test at maximum of 1000 psi with fuel flowing upward through the cup spray holes.
5. If counterbore at top of injector body fills with fuel in less than 10 seconds, the plunger clearance is excessive and might cause dilution in the engine.
6. During this check inspect injector for leaks around the cup, body and plugs.
7. If injectors do not pass the test, correction must be made by installing new parts, checking assembly, or return of injector to the factory for refitting of plungers.
8. Worn plunger links can be removed by breaking the ears off the retaining ring. Then install new parts.
9. At any time an injector plunger is removed, lubricate it with a thin coat of Molycote Type M-55 (ready mixed) or a mixture of lubricating oil and Molycote Type Z.

Relieving Cup and End

If the cup end of J, H, NH and NVH series injectors are not relieved as shown in Fig. 15, the relief should be added. Addition of the relief will improve cup gasket-to-body contact and give an improved seal. Special Cummins cutters are available for performing this operation. The center of the cutter acts as a stop to prevent cutting too deep. The relief should be .005" to .010" deep.

When injector cups are installed on J, H, NH and NVH series injectors with the relief, tighten cups to 60 lb. ft. with a torque wrench.

Replacing Injector "O" Ring

The injector cup "O" ring should be replaced with a new one each time the cup is removed. Install an "O" ring assembly sleeve, Fig. 16, over the threaded end of the injector body. Dip the "O" ring in lubricating oil and slide it over the sleeve into the groove on the injector body.

Installing Injector Cups

Overtightening injector cups will distort the cup and prevent injector plunger from seating properly. Undertightening may cause engine to misfire.

Tighten cups on bodies with a torque wrench. An adpater wrench is available for use with a socket and torque wrench. Tightening values are as follows:

Wrench Adapter	Injector Cup	Tighten To
ST-500	L and LR	300 lb. ft.
*ST-499	J, JS, JT	60 lb. ft.
*ST-498	All Others	60 lb. ft.

*Injectors with relief, Fig. 15.

If the injector plunger does not seat properly in the cup, change the cup rather than try to lap the plunger and cup together. Lapping will change the relationship between plunger groove and metering orifice, and disturb fuel metering.

Always use a new injector cup gasket when cup is assembled to body to avoid distortion of cup. When the cup is tightened to the body the gasket compresses everywhere except under the milled slots on the end of the body. Then, if reused, the uncompressed areas may cause the cup to cock and prevent the plunger from seating properly.

Tighten plunger retaining screw to a torque of 40 inch lbs.

PT FUEL PUMP

When fuel pumps are repaired or rebuilt the work must be done by specially trained mechanics in a properly equipped shop. Cummins Dealer's facilities are available or he will provide the necessary tools, equipment and necessary information required to do the work in your own shop. For general field service, however, the following operations can be performed.

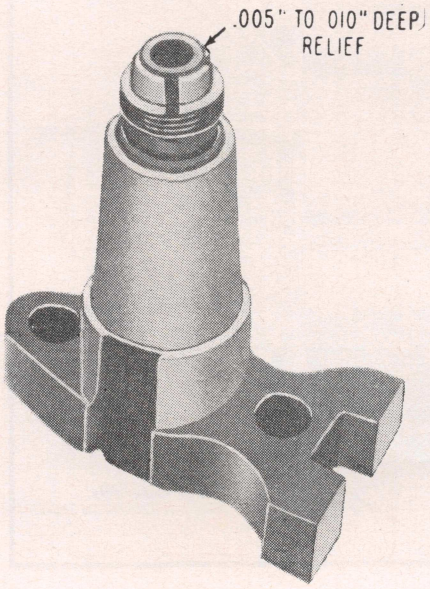

Fig. 15 Relief on injector body

Fig. 16 Installing "O" ring on injector

Fuel Pump Screen

The fine mesh fuel filter screen in the pump, Figs. 17 and 18, should be removed and cleaned each 1000 gallons fuel consumed to prevent unnecessary wear and loss of power. A clogged filter screen will cut down fuel delivery to the engine. It is good practice to clean this filter after 5 to 6 hours operation when the fuel pump is first put into service. This is to remove particles of gasket cement which may have been used in connections between the pump and engine fuel filter.

The filter screen is located under the large cap on top of the fuel pump. It can be removed by loosening the cap and lifting out the spring and screen assembly. The screen can be separated from one of the screen retainers for easy cleaning; the other retainer is soldered to the screen. Replace the screen and retainer, with the retainer with the hole facing down. The spring is assembled on the screen, the cone end of the spring may be assembled either up or down. The cap must be tightened to 20-25 lb. ft.

Priming the Pump

No priming is required under normal

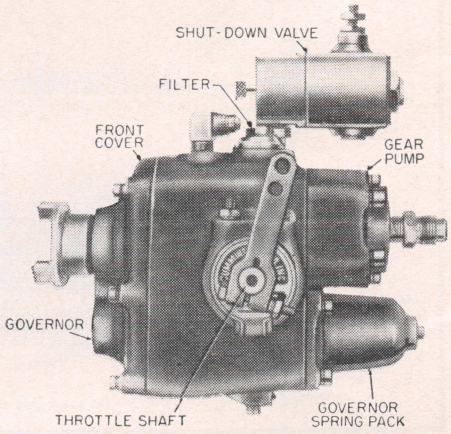

Fig. 17 Exterior view of PT fuel pump (automotive type)

conditions. However, the first time a "dry" pump is hooked up a few squirts of clean lubricating oil in the gear pump will aid in quicker pick up of fuel.

Fuel Filter

The majority of low power complaints are caused by dirty fuel filter elements. A dirty element restricts fuel flow in varying degrees and may stop flow entirely.

The element must be changed as often as necessary to maintain a full fuel flow. The change periods will vary according to the fuel used but the average is once every 400 to 500 hours of operation.

1. Loosen capscrew at top of fuel filter and lower filter case from top cover.
2. Take out dirty element, clean filter case, and install a new element.
3. Install a new filter cover gasket, dip gasket in fuel oil before installing so cover will seat smoothly.
4. Fill filter case with clean fuel for faster pump pick-up and tighten cover capscrew securely to prevent air leaks.

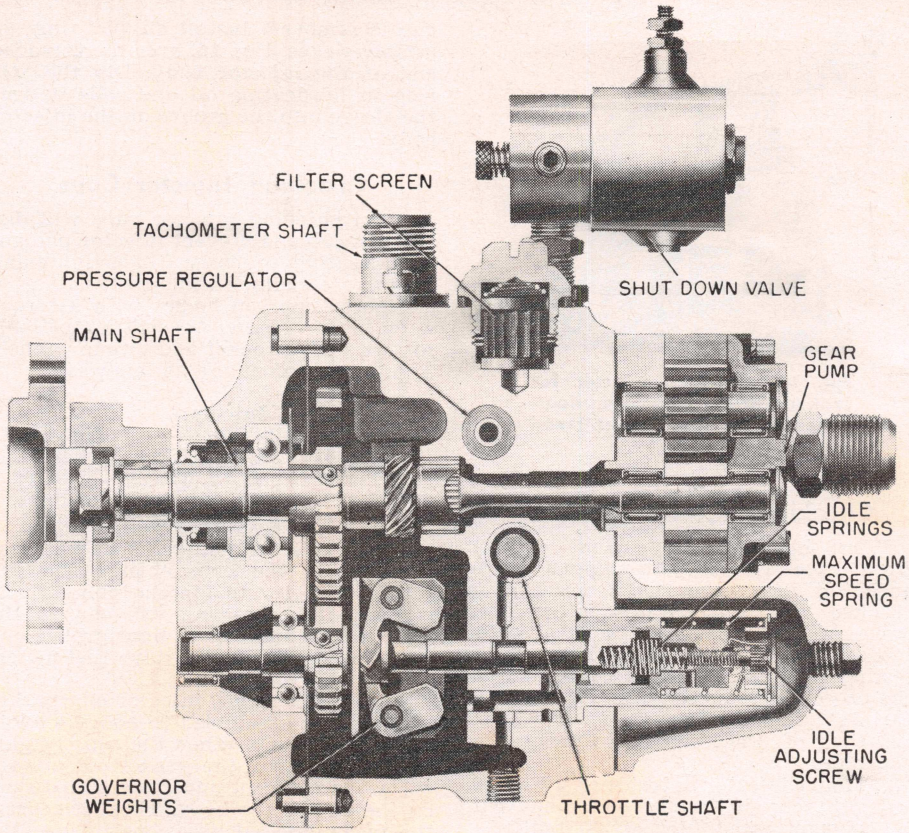

Fig. 18 Sectional view of PT fuel pump (automotive type)

SUPERCHARGER, J ENGINES

Fig. 19 illustrates the construction of the supercharger. Check the condition of the air outlet port. An excessive amount of oil in this port indicates that the piston ring oil seals on the rotor shaft may be worn or broken or oil may be coming over to the supercharger inlet through the breather line from the engine valve cover. If an inspection of the breather line does not show evidence of oil, then the supercharger should be completely disassembled for a closer inspection of the piston ring oil seals.

Check the radial clearance in the bearings by mounting a dial indicator as shown in Fig. 20. Clearance should not exceed .003". To make this check, it is necessary to flush the oil out of the bearings so that a reasonably accurate measurement of the bearings can be obtained. First remove the pump-end cover and force diesel fuel under pressure through the supercharger oil inlet until the bearings are flushed free of lubricating oil. Then, if radial movement exceeds .003", the supercharger must be disassembled.

Check end play of the rotor shaft by mounting the dial indicator as shown in Fig. 21. If total end play of either rotor shaft exceeds .005", the supercharger must be disassembled.

Check timing gear backlash with dial indicator mounted as shown in Fig. 22. If backlash between gears exceeds .004", install a new set of gears.

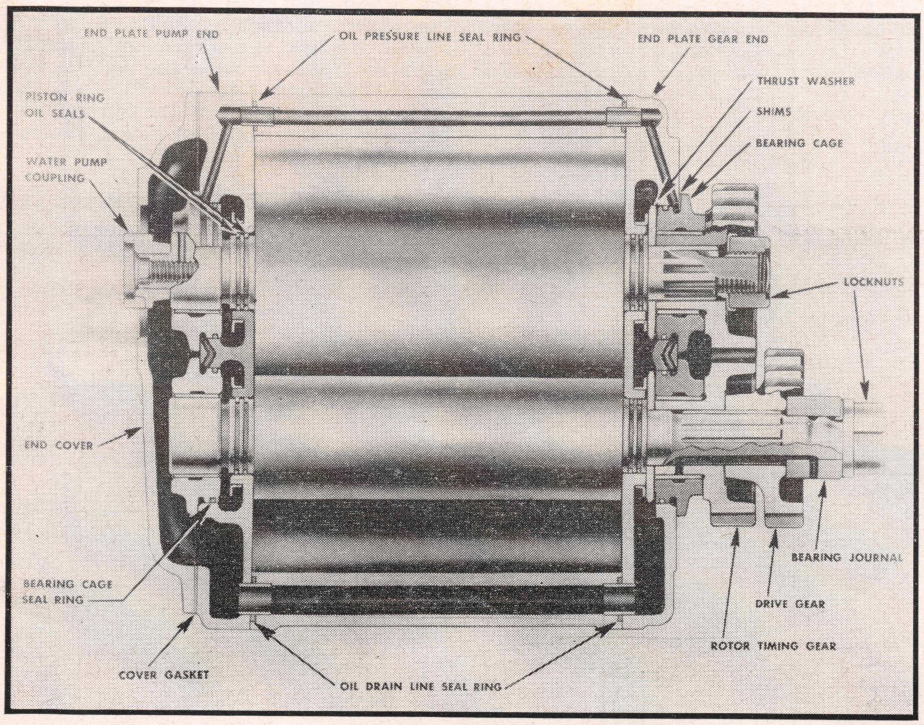

Fig. 19 Cutaway view of Supercharger on J Series engines

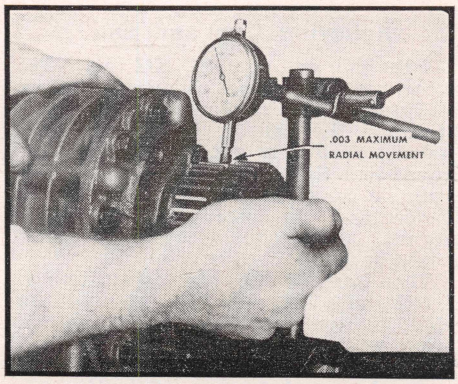

Fig. 20 Checking supercharger radial bearing clearance. J Series engines

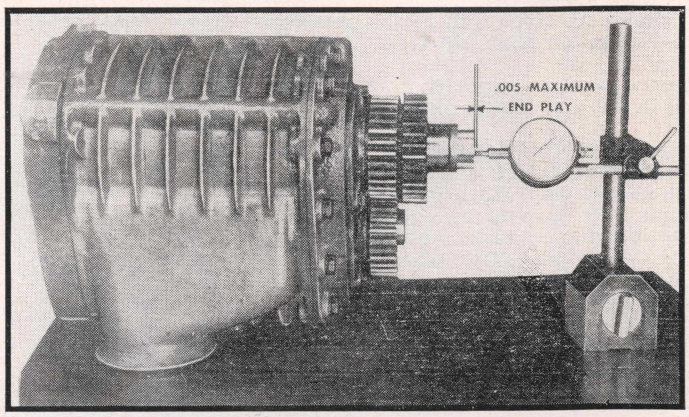

Fig. 21 Checking end play of supercharger rotor shafts. J Series engines

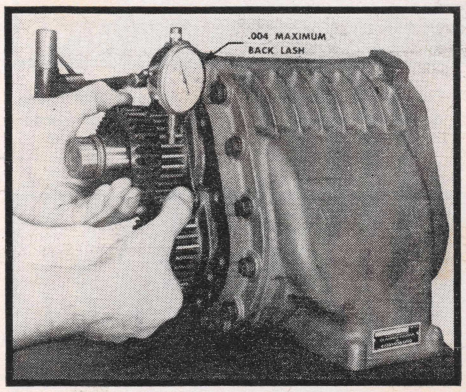

Fig. 22 Checking timing gear backlash. J Series engines

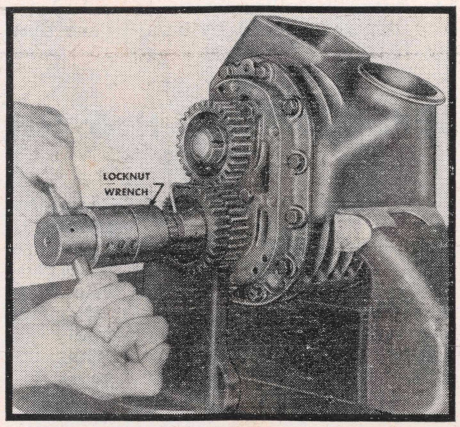

Fig. 23 Removing rotor shaft lock nuts. J Series supercharger

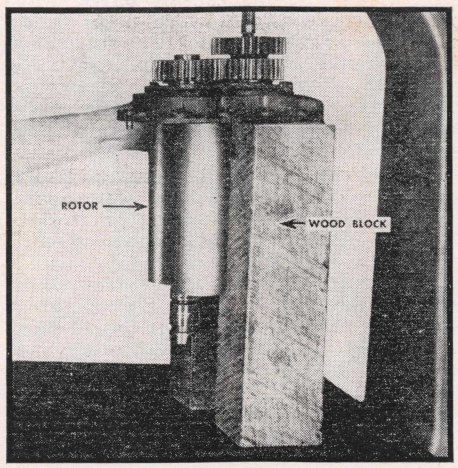

Fig. 24 Pressing gears off rotors. J Series supercharger

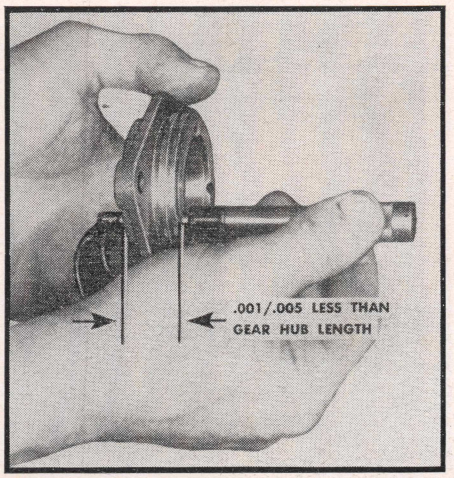

Fig. 25 Checking width of bearing cage. J Series supercharger

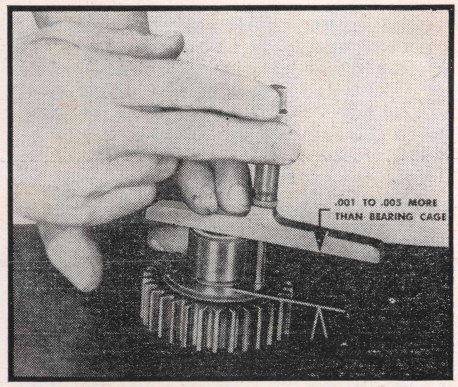

Fig. 26 Checking hub length for end play. J Series supercharger

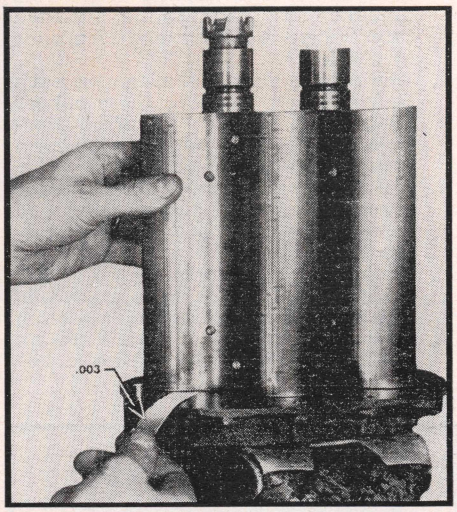

Fig. 27 Checking rotor end clearance J Series supercharger

Disassembly

1. With special lock nut wrench, Fig. 23, remove rotor shaft lock nuts. Use a piece of brass or copper rod wedged between the timing gear teeth to lock the gears while loosening the lock nuts.
2. Remove pump end plate.
3. Remove housing from gear end plate.
4. Press off gears, Fig. 24.

Rebuilding

1. Piston ring seals on rotor shafts, if broken, should be replaced. Clean out ring grooves and check for excessive or visible groove wear. Insert new rings with a piston ring expander.
2. Excessive wear or roughness in piston ring bores in end plates will not allow piston rings to seal properly in which case the end plates should be replaced.
3. If the bearing bores in each bearing cage exceeds 1.3765″ diameter the bearing cage should be replaced. Note that shims are used on the gear end bearing cages under the mounting flange. These shims control the end clearance of the rotors in the housing. Mark each cage so that it can be replaced in the same pocket from which it was removed and tie each set of shims with its respective cage. If new bearing cages are to be installed, this precaution is not necessary.
4. The end thrust can be checked by measuring the bearing cage width and the distance from the thrust face of the gear to the end of the gear hub. The bearing cage width must be .001″ to .005″ less than the gear hub, Figs. 25 and 26. If the difference between these two dimensions is greater than .005″, the end thrust is too great. New gears, thrust washers and bearing cages should be used.
5. If the water pump drive coupling on

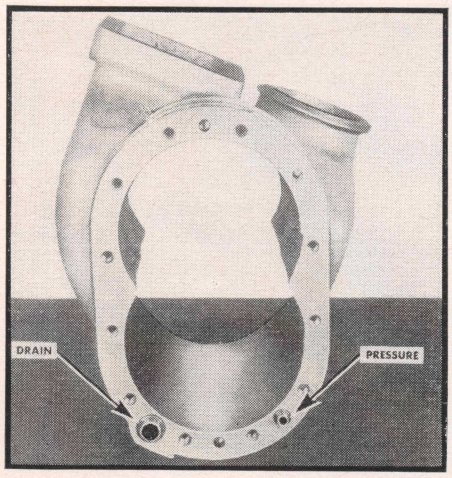

Fig. 28 Oil seal rings (on each end of housing). J Series supercharger

the rotor shaft shows excessive wear, it should be replaced.

6. For other repairs, such as broken or cracked rotors, shafts or housing, the supercharger should be returned to the factory for rebuilding.

Assembly

1. Install piston ring oil seals in grooves on rotor shaft, using a ring expander. Ring gaps should be held to .001 to .002".
2. Press water pump drive coupling on rotor shaft extension up tight against the shoulder on the bearing journal.
3. Install thrust washers in gear end plate and replace bearing cages. If new bearing cages are to be installed, use .005" total shim thickness under each bearing cage. This amount may have to be adjusted later when the rotor end clearance is checked.
4. Use new rubber seal rings on each bearing cage. Leaving these rubber rings out will cause loss of oil pressure and result in burned out supercharger bearings.
5. Insert splined shaft of driving rotor through bottom hole in gear end plate, using care not to damage piston ring seals.
6. Press on timing gear.
7. Insert idler rotor through second hole in gear end plate and press on other timing gear. Make certain that the rotors are positioned 90° apart as the gears come into mesh.
8. Press drive gear on shaft up tight against timing gear.
9. Slip outboard bearing on shaft.
10. Tighten lock nut and washer on each rotor shaft.
11. Check clearance between rotors and end plate, Fig. 27, which should be .003" with no end play. If more than .003", shims will have to be added under the bearing cage mounting flange. If less than .003", shims should be removed until proper clearance is obtained.
12. After proper end clearance is obtained, install housing to end plate. Use new rubber seal rings on the oil pressure and drain line ferrules, Fig. 28.
13. Replace pump end plate to housing, using new rubber seal rings on oil pressure and drain line fittings.
14. After installing cover to end plate, turn rotor shaft by hand to see that it rotates freely.

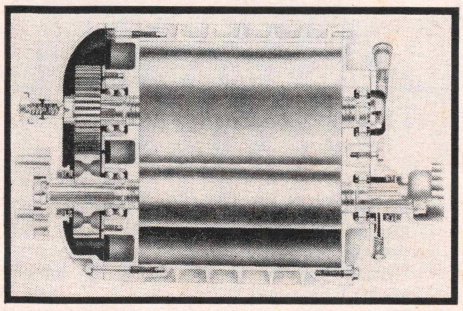

Fig. 29 Supercharger. H and NH engines

SUPERCHARGER, H & NH ENGINES

Fig. 29 shows the construction of the supercharger used on these engines. If the supercharger rotors or case are scored or broken, it is best to get a factory rebuilt unit. This inspection can be made through the inlet and outlet ports, thus eliminating useless disassembly.

In addition to the hand tools that are available to the average mechanic, certain special tools must be used in replacing bearings and oil seals. To overhaul the supercharger completely, Service Tool Kit No. ST-107 is available through your Cummins Dealer.

After the supercharger is disassembled, clean and inspect all parts. Any broken or excessively worn parts must be replaced with new ones. The following parts should always be replaced with new ones whenever the unit is disassembled: all bearings, oil seals, bearing cover gasket, gear cover gasket and four rotor shaft lockwashers.

Inspect the rotors, housing and end plates for cracks, abrasions, wear spots and build-ups of foreign material. Cracked castings should be replaced with new ones. Rough or worn spots should be smoothed out with fine emery cloth and all deposits of gum, carbon, etc., should be removed. The parts should then be washed clean and dried. Rotors and shafts are not separable and must be replaced as a unit. Check the following parts for excessive wear:

1. Generator flange should be replaced if the hub diameter is visibly worn or grooved under the oil seal, or if the sprocket teeth are worn or broken.
2. Drive coupling should be replaced if the hub diameter is visibly worn or grooved under the oil seal.
3. The rotor timing gears should be checked for backlash with gear teeth clean and dry. If backlash exceeds .004", new gears should be used.
4. Gear and coupling splines should be a press fit on rotor shaft splines. New rotors and gears should be used if this spline fit is not tight.

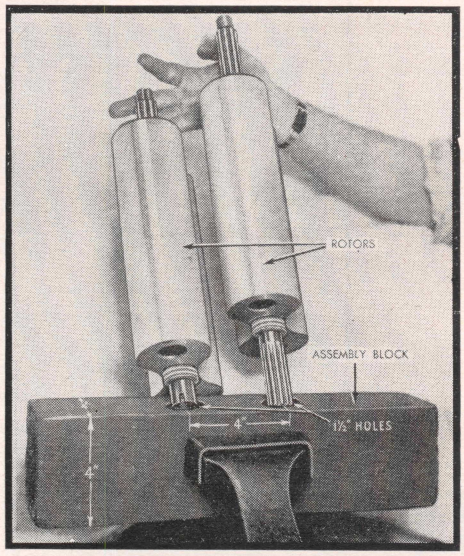

Fig. 30 Dimensions for wood block to assemble supercharger. H and NH engines

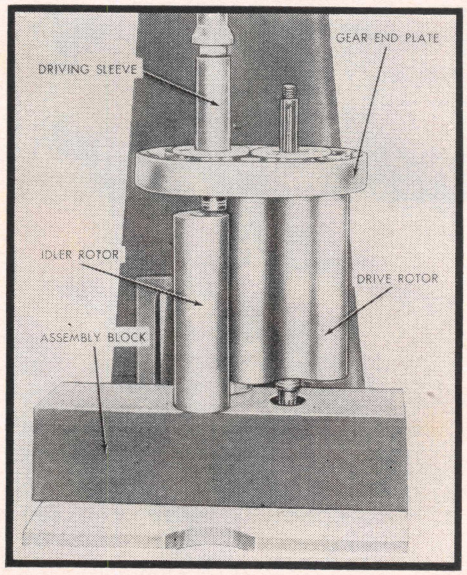

Fig. 31 Pressing rotor on gear end plate. H and NH supercharger

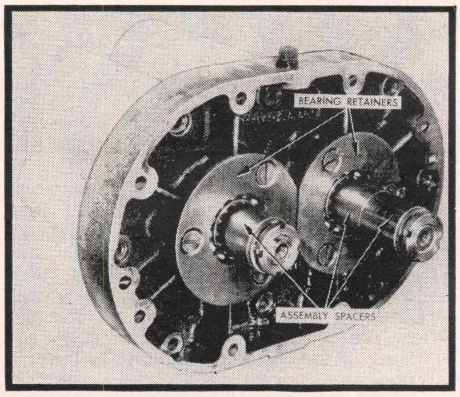

Fig. 32 Bearing retainers and temporary assembly spacers. H and NH supercharger

5. Bearing spacers should be replaced if the outside diameter is visibly worn or grooved.
6. Drive rotor shaft ends should be checked for runout. Mount rotor and shaft assembly on the bearing journals and indicate the outside diameter of the splines at the shaft ends. Runout should not exceed .001" total indicator reading.
7. If the coupling drive pins or bushings show wear, press them out and replace with new pins and bushings in both the engine and supercharger halves.
8. Broken piston seals or rings must be replaced.

Supercharger, Assemble

1. Use a block of wood to hold the rotors for preliminary assembly and for checking end clearance, Fig. 30.
2. Soak new seals in lubricating oil and assemble in the two end plates with the sealing lip pointing away from the rotors.
3. Assemble the oil seals in the gear cover and bearing cover with the sealing lip pointing toward the rotors.
4. Assemble piston rings in rotor shaft grooves. Piston ring seals are used in superchargers after Serial No. 20,000.
5. Assemble rotors in wood block, Fig. 30, with gear ends up.
6. Assemble a bearing spacer to each rotor shaft and assemble end plate to rotor shafts, Fig. 31.
7. Assemble new double row ball bearings to rotor shafts with the bearing name to the outside. Drive bearings into end plate bearing pockets using special driving mandrel.
8. Assemble bearing retainers to end plate with lockwashers and flat head screws.
9. Assemble each rotor into proper bearings in gear end plate.
10. To check end clearance between rotors and end plate, use temporary spacers on the shafts and tighten in place with the shaft lock nuts, Fig. 32. Position the rotor holes so they lock against each other while tightening lock nuts.
11. With a feeler gauge check the clearance between rotors and end plate, Fig. 33. This clearance should be .005 to .006". Bearing spacers or steel shims are available in steps of .002", .003" and .005". The proper spacer or shims should be used between the shaft shoulder and bearing inner race.
12. On superchargers before Serial No. 20,000, assemble rotors and end plate to housing. With new oil seals in place, assemble plain end plate to housing. Assemble new roller bearings in the end plate with the name to the outside. With feeler gauges inserted through the inlet and outlet ports, check the clearance between the rotor lobes and housing bore, Fig. 34. Check the plain end plate clearance as shown in Fig. 35, which should be .007" minimum. If these clearances cannot be obtained, the supercharger should be returned to the factory for reconditioning.

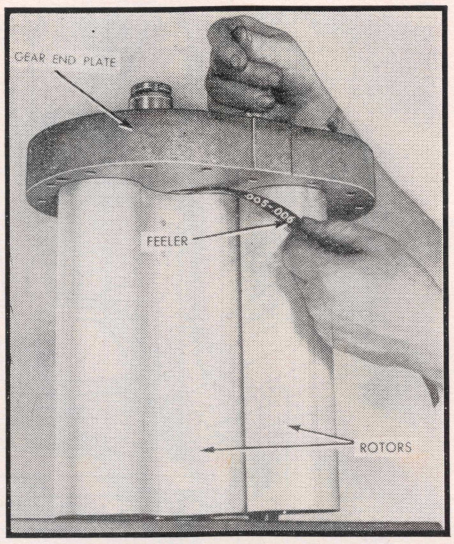

Fig. 33 Gear end plate clearance. H and NH supercharger

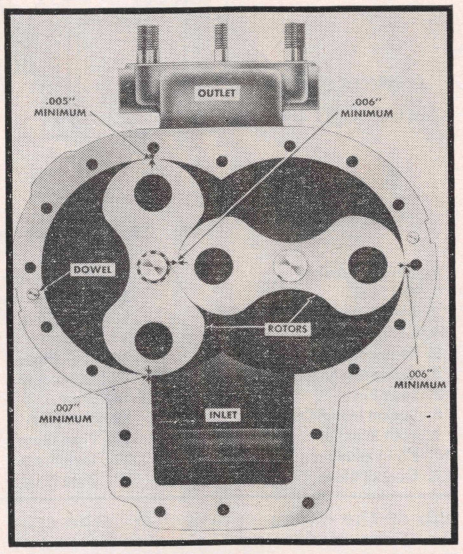

Fig. 34 Minimum clearance on superchargers before serial number 20,000. H and NH supercharger

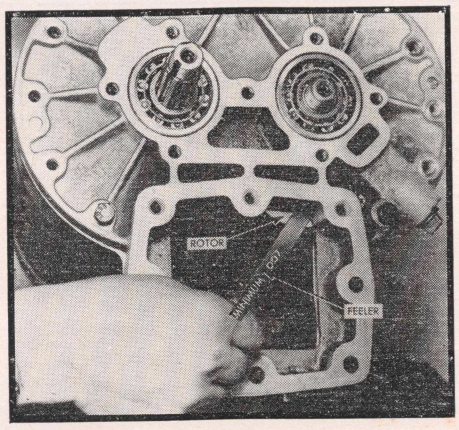

Fig. 35 Plain end plate clearance on superchargers before serial number 20,000. H and NH engines

13. On superchargers after Serial No. 20,000, separate inner races from new roller bearings and drive inner races on plain end of rotor shafts. Assemble rotors, end plate and gears to housing. Assemble plain end plate to housing. Install roller bearing outer races with rollers in end plate with name to outside.
14. On all units, remove temporary assembly spacers, Fig. 32, and install timing gear on drive rotor shaft. Install gear on drive shaft.
15. With rotors set at 90° apart, press on idler gear. Make certain that the rotors are timed correctly and that the two gears are meshing properly as the idler gear is being pressed on the shaft.
16. Lock the rotors with the special shaft locking wrench and install the idler gear lockwasher and lock nut.
17. Install the oil metering plunger and spring in the gear cover. The small hole in the plunger must be clean. The slots in the plunger must be lined up with the prongs on the spring retainer fitting or the cover will not pull up against the end plate.
18. With a new oil seal in place, install the cover to the end plate with a new gasket.
19. Support the assembly on the drive rotor shaft on the plain end and press the drive coupling on the shaft. Apply pressure on the coupling shaft, not the drive pins. With the special locking wrench in place on the drive coupling, install the shaft lockwasher and lock nut.
20. Install idler rotor shaft lockwasher and nut.
21. Assemble the bearing cover with a new oil seal and gasket.
22. Press generator drive sprocket on shaft and lock with washer and nut.
23. Install oil metering pin, spring and fitting in bearing cover. The radius of the metering pin must correspond to the radius of the coupling hub. It must work freely, and the hole in the metering pin must be clean and line up with the slot in the hub.
24. Install oil drain fitting in gear cover. Turn drive coupling by hand to see that rotors rotate freely.
25. After installing supercharger to engine, remove oil filler plug from top of gear end plate and add one quart of engine lubricating oil. Replace filler plug.

TURBOCHARGER

Under normal operating conditions, the turbocharger, Fig. 36, is subject to very little wear since the rotor is the only moving part. The rotor must be delicately balanced due to its high rotative speed and the extremely close running clearances. It is very important that this balance not be disturbed, and the running clearances must be maintained.

When it becomes necessary to dismantle the rotor assembly and to replace bearings and oil seals, or for any mechanical failure, the turbocharger must

be returned to the factory for overhaul. This is required since special equipment is needed to assure proper reassembly and balance.

Cleaning Procedure

The blower end of the supercharger should be cleaned after 4000 to 8000 gallons fuel consumption. *In the following procedure, numbers in parentheses refer to item numbers in Fig. 36.*

1. With intake and discharge ports covered, wash exterior of turbocharger thoroughly. Do not use a solution that will damage the finished surfaces.
2. Loosen and remove eight capscrews (17) and four lock plates (16) and take off compressor cover (12).
3. Use Bendix cleaner or some similar solvent, but *never* use a caustic solution or some other type that may attack aluminum as this will either weaken the compressor wheel or destroy its balance. Never use a wire brush or scraper; a brush with nylon or hog bristles is preferable.
4. If the unit is found to be very dirty when the compressor cover is removed, immerse the compressor wheel end of the turbocharger in the cleaning fluid up to the edge of the compressor housing (13) and allow it to soak. Use care not to rest the weight of the turbocharger on the compressor wheel or on the end of the shaft.
5. Dry the unit thoroughly with compressed air. Assemble the compressor cover to the turbocharger.

Checking Bearing Clearances

Fasten a dial indicator to the blower inlet casing flange and register it on a flat of the impeller nut or on a lathe center. Then by moving the impeller end of the shaft up and down, note the total indicator reading. If the total indicator reading exceeds .005″ the blower end bearing requires replacement.

The turbine end bearing can be checked by fastening the dial indicator to the turbine housing and register on the hub of the expander wheel or lathe center. Then by forcing the expander end of the shaft up and down, or sideways, make note of the total indicator reading. If the total indicator reading exceeds .005″ the bearing must be replaced.

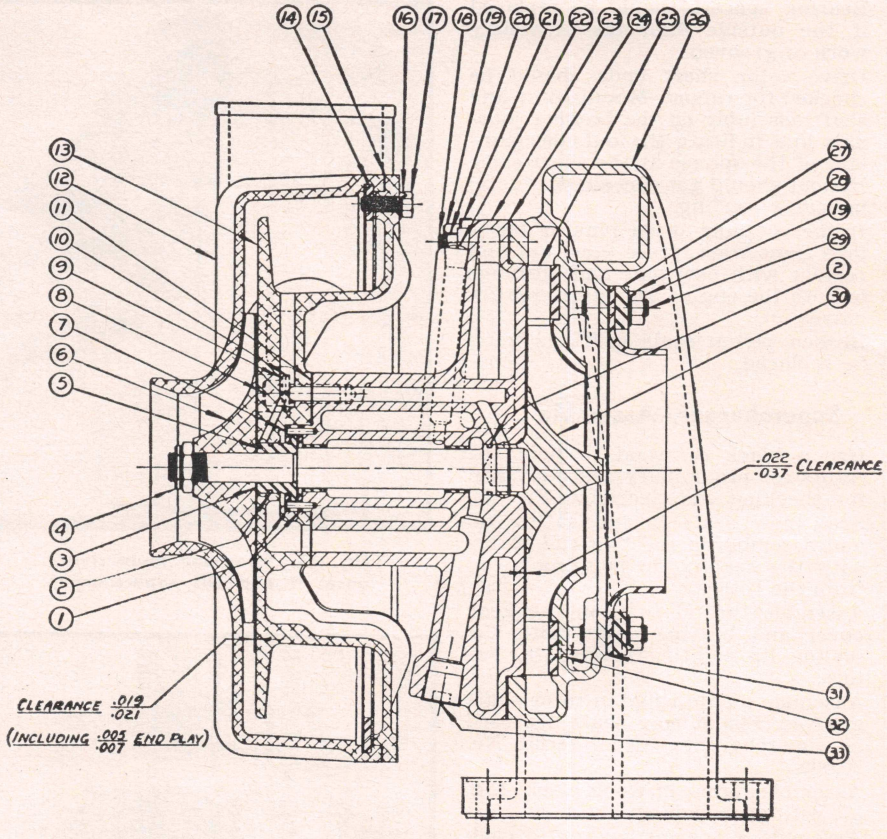

Fig. 36 Sectional view of turbocharger

1. Thrust Washer
2. Oil Seal
3. Shim—Compressor Wheel
4. Locknut
5. Thrust Collar
6. Compressor Wheel
7. Lock Pin
8. Socket Head Capscrew
9. Lock Washer
10. Plain Washer
11. Gasket Shim
12. Compressor Cover
13. Compressor Housing
14. Lock Ring
15. Gasket
16. Lock Plate
17. Capscrew
18. Stud
19. Hex Nut
20. Pipe Plug
21. Lock Plate
22. Pipe Plug
23. Bearing Housing Assembly
24. Gasket
25. Nozzle Ring
26. Turbine Housing Assembly
28. Lock Plate
29. Stud
30. Turbine Wheel & Shaft Assem.
31. Gasket—Turbine Outlet
32. Nozzle Lock Pin
33. Pipe Plug

Rotor end play with surface oiled should be .005″ to .007″.

Clearance between back face of compressor wheel and compressor housing, including rotor end play, should be .012″ to .021″.

DIAMOND T

INDEX OF SERVICE OPERATIONS

PAGE NO.

AXLES, DRIVING
Eaton Axle Service 176
Locking Differentials 169
Timken Axle Service 209

BRAKES
Adjustments 252
Air Brake System 259
Hydraulic Brake System 250
Vacuum Brake Boosters 268

CLUTCH 503

COOLING SYSTEM
Cooling System Capacity 486
Water Pump Repairs 498

ELECTRIC SYSTEM
Alternators & Regulators 37
Dash Gauge Service 93
Distributor Specifications 490
Distributor Service 7
Generator Specifications 491
Generator & Regulator Service 27
Ignition, Transistorized 22
Ignition Timing 498
Starting Motor Specifications 487
Starting Motor Service 65
Starter Switch Service 85

ENGINE
Camshaft, Replace 495
Crankshaft Bearing Specifications 488
Crankshaft End Play, Adjust 497
Crankshaft Rear Oil Seal 497
Cylinder Head, Replace 492
Cylinder Sleeves 496
Main Bearings, Replace 497
Piston Pins, Replace 497
Piston Rings, Replace 496
Piston & Ring Specifications 488
Pistons & Rods, Remove 495
Piston & Rod, Assemble 495
Pistons, Replace 496
Rocker Arm Service 492
Rod Bearings, Replace 497
Timing Chain or Gears, Replace 494

PAGE NO.

Valves, Adjust 492
Valves, Grind 492
Valve Guides 494
Valve Lifters 494
Valve Rotators 493
Valve Springs 493
Valves, Remove 492
Valve Seat Inserts 493
Valve Spring Testing 493
Valve Specifications 488

ENGINE OILING
Crankcase Capacity 486
Crankcase Ventilation 6
Oil Pump Repairs 498

FUEL SYSTEM
Carburetor Adjustments 499
Carburetor Governors 502
Crankcase Ventilation 6
Fuel Pump Service 104
L.P.G. Carburetion 109

SPECIFICATIONS
Crankshaft & Bearing 488
Distributor 490
Engine Tightening Torque 488
Generator & Regulator 491
Piston, Pin & Ring 488
Starting Motor 487
Tune Up 488
Valve 488
Wheel Alignment 489

STEERING GEARS 506

TRANSFER CASES 242

TRANSMISSIONS
Clark 110
Fuller 122
New Process 135
Spicer 141
Warner 164
Powermatic 281

TUNE UP SERVICE 2

MODEL INDEX & ENGINE APPLICATION

1960-63 CONVENTIONAL 4x2

Truck Model	Year	Engine Make	Engine Model	Oil Pan Qts. Refill	Cooling System Qts.
2000, 2020	1960–63	Reo	DT6-110	8	22½
2000, 2020	1960–63	Reo	DT6-130	8	22½
3000, 3020	1960–63	Reo	DT6-130	8	22½
3000, 3020	1960–63	Reo	DT6-145	8	22½
4000, 4020	1960–63	Reo	DT6-145	8	22½
4000, 4020	1960–63	Reo	DT6-170	8	22½
4000, 4020	1960–63	Reo	DT6-185	8	31½
5000, 5020	1960–63	Reo	DT6-170	8	22½
5000, 5020	1960–63	Reo	DT6-185	8	31½

1960-63 CONVENTIONAL TANDEM

Truck Model	Year	Engine Make	Engine Model	Oil Pan Qts. Refill	Cooling System Qts.
3300, 3320	1960–63	Reo	DT6-145	8	22½
3300, 3320	1960–63	Reo	DT6-170	8	22½
3300, 3320	1960–63	Reo	DT6-185	8	31½
4300, 20, 60	1960–63	Reo	DT6-145	8	22½
4300, 20, 60	1960–63	Reo	DT6-170	8	22½
4300, 20, 60	1960–63	Reo	DT6-185	8	31½
5300, 5360	1960–63	Reo	DT6-170	8	22½
5300, 5360	1960–63	Reo	DT6-185	8	33

1960-63 90" CAB CONVENTIONAL 4x2

Truck Model	Year	Engine Make	Engine Model	Oil Pan Qts. Refill	Cooling System Qts.
D3000, D3020	1960–63	Reo	DT6-130	8	22½
D3000, D3020	1960–63	Reo	DT6-145	8	22½
D4000, D4020	1960–63	Reo	DT6-145	8	31½
D4000, D4020	1960–63	Reo	DT6-170	8	31½
D4000, D4020	1960–63	Reo	DT6-185	8	31½
D5000, D5020	1960–63	Reo	DT6-170	8	31½
D5000, D5020	1960–63	Reo	DT6-185	8	31½
D6000, D6020	1960–63	Reo	DT8-207	9①	38½
D6000, D6020	1960–63	Reo	DT8-235	9①	38½
D6300, D6320	1960–63	Reo	DT8-207	9①	38½
D6300, D6320	1960–63	Reo	DT8-235	9①	38½
D7000, D7020	1960–63	Reo	DT8-207	9①	38½
D7000, D7020	1960–63	Reo	DT8-235	9①	38½
D7300, D7320	1960–63	Reo	DT8-207	9①	38½
D7300, D7320	1960–63	Reo	DT8-235	9①	38½

1960-63 TILT CAB FORWARD 4x2

Truck Model	Year	Engine Make	Engine Model	Oil Pan Qts. Refill	Cooling System Qts.
534	1960–63	Reo	DT6-145	8	33½
634	1960–63	Reo	DT6-145	8	33½
634, 734	1960–63	Reo	DT6-170	8	33½
634, 734	1960–63	Reo	DT6-185	8	35½

1960-63 TILT CAB FORWARD TANDEM

Truck Model	Year	Engine Make	Engine Model	Oil Pan Qts. Refill	Cooling System Qts.
634, 734	1960–63	Reo	DT6-145	8	33½
634, 734	1960–63	Reo	DT6-170	8	33½
634, 734	1960–63	Reo	DT6-185	8	35½

1960-63 SCHOOL BUS CHASSIS

Truck Model	Year	Engine Make	Engine Model	Oil Pan Qts. Refill	Cooling System Qts.
2700, 2720	1960–63	Reo	DT6-110	8	22½
2700, 2720	1960–63	Reo	DT6-130	8	22½
3700, 4700	1960–63	Reo	DT6-130	8	22½
3700, 4700	1960–63	Reo	DT6-145	8	22½
3700, 4700	1960–63	Reo	DT6-170	8	22½
3700, 4700	1960–63	Reo	DT6-185	8	31½

1952-59 CONVENTIONAL

Truck Model	Year	Engine Make	Engine Model	Oil Pan Qts. Refill	Cooling System Qts.
222	1952	Hercules	QXLD	6	23
322	1952	Hercules	JXB	9	23
323	1953–55	Nash	DT-252	6	17
404SC	1952	Hercules	JXC	9	23
422	1953–55	Cont.	K-6271	7	24
431	1957–58	I.H.C.	XL-264	7	26
522	1953–55	Cont.	K-6330	7	24
530	1956	I.H.C.	XL-308	7	28
531	1957–59	I.H.C.	XL-308	7	28
532	1955–59	I.H.C.	XL-372	9	35
622	1953–55	Cont.	K-6363	7	24
630	1955–59	I.H.C.	XL-406	9	36
662	1955–59	I.H.C.	XL-450	9	36
720	1952–55	Cont.	T-6427	10	42
722	1952–55	Hercules	TDXB	10	42
730	1956–59	I.H.C.	XL-450	9	36
830	1955–59	I.H.C.	XL-501	9	35
831	1957–59	I.H.C.	XL-501	9	35
920	1952–55	Cont.	R-6572	18	49
920	1956–59	Cont.	R-6602	18	49

1952-59 TILT CAB AND C.O.E.

Truck Model	Year	Engine Make	Engine Model	Oil Pan Qts. Refill	Cooling System Qts.
323C	1952–55	Nash	DT-252	6	17
422C	1952–55	Cont.	K-6271	7	24
430C	1956–59	I.H.C.	XL-264	7	29
522C	1952–55	Cont.	K-6330	7	24
530C	1956–59	I.H.C.	XL-308	7	33
622C	1952–55	Cont.	K-6363	7	24
630C	1956–59	I.H.C.	XL-406	9	37
720C	1952–56	Cont.	T-6427	10	32
730C	1956–59	I.H.C.	XL-450	9	36
830C	1952–55	I.H.C.	XL-501	9	35

DIESEL MODELS

Truck Model	Year	Engine Make	Engine Model	Oil Pan Qts. Refill	Cooling System Qts.
723	1955–61	Cummins	②	③	32
921C	1955–61	Cummins	②	③	54
921D	1960–61	Cummins	②	③	36
923C	1960–61	Cummins	②	③	54
923D	1960–61	Cummins	②	③	36
950	1953–55	Cummins	②	③	56
990	1960–61	Cummins	②	③	48

①—Before Engine No. 225, 275, 8 qts.
②—Choice of several engines available.
③—Varies depending upon oil pan used.

GENERAL ENGINE SPECIFICATIONS

ENGINE IDENTIFICATION—Diamond T Service Parts Identification Plate is located inside of truck cab. Stamped on the plate is the model of the engine, transmission, auxiliary transmission, rear axle and front axle. This data represents only the equipment on the vehicle when it was shipped from the factory. Prior to Diamond T's assimilation by The White Motor Company, identification plates were attached to the engines and transmissions.

Year	Engine Model	No. Cyls. & Valve Location	Bore & Stroke	Piston Displacement, Cubic Inch	Compression Ratio	Maximum Brake H. P. @ R.P.M.	Maximum Torque, Lb. Ft. @ R.P.M.	Normal Oil Pressure, Lbs.
1953–56	DT-252	6 In Head	3½ x 4⅜	252	7.6	113 @ 3600	216 @ 1400	40
1952	JXB	6 In Block	3⅝ x 4¼	263	6.5	98 @ 3200	190 @ 1400	25–40
1952	JXC	6 In Block	3¾ x 4¼	282	6.5	103 @ 3200	207 @ 1400	25–40
1952	JXD	6 In Block	4 x 4¼	320	6.5	113 @ 3000	240 @ 1200	25–40
1952	JXLD	6 In Block	4 x 4½	339	6.5	131 @ 3200	272 @ 1400	25–40
1953–56	K-6271	6 In Head	3⅝ x 4⅜	271	6.4	112 @ 3000	216 @ 1300	40
1953–56	K-6330	6 In Head	4 x 4⅜	330	6.4	141 @ 3000	266 @ 1600	40
1953–56	K-6363	6 In Head	4 x 4 13/16	363	6.4	150 @ 3000	288 @ 1600	40
1952	QXLD	6 In Block	3 7/16 x 4¼	237	6.5	92 @ 3200	190 @ 1400	25–40
1952–56	R-6572	6 In Head	4¾ x 5⅜	572	6.0	200 @ 2800	450 @ 1300	50
1956–57	R-6602	6 In Head	4⅞ x 5⅜	602		221 @ 2600	484 @ 1300	50–55
1952–57	T-6427	6 In Head	4 5/16 x 4⅞	427	6.4	164 @ 2700	350 @ 1500	40
1956–59	XL-264	6 In Head	3 11/16 x 4½	264	7.0	140 @ 3800	234 @ 2000	30–40
1956–59	XL-308	6 In Head	3 13/16 x 4½	308	6.5	147 @ 3200	280 @ 2000	35–45
1955–58	XL-372	6 In Head	4⅜ x 4⅛	372	6.5	155 @ 2850	308 @ 1600	40–45
1955–59	XL-406	6 In Head	4⅜ x 4½	406	6.5	164 @ 2750	338 @ 1700	40–45
1955–59	XL-450	6 In Head	4⅜ x 5	450	6.5	174 @ 2600	388 @ 1600	40–45
1955–59	XL-501	6 In Head	4½ x 5¼	501	6.5	200 @ 2600	444 @ 1500	40–45
1960–63	DT6-110	6 In Head	3⅝ x 4⅛	255	6.70	110 @ 3400	190 @ 1400	40
1960–63	DT6-130	6 In Head	3⅞ x 4⅛	292	6.94	130 @ 3300	230 @ 1600	40
1960–63	DT6-145	6 In Head	4⅛ x 4⅛	331	6.73	145 @ 3200	270 @ 1600	40
1960–63	DT6-170	6 In Head	4⅛ x 4⅛	331	7.50	170 @ 3400	297 @ 1600	40
1960–61	DT6-185	6 In Head	4¼ x 4¼	362	7.50	185 @ 3400	320 @ 1200	40
1962–63	DT6-186	6 In Head	4¼ x 4¼	362	7.50	186 @ 3400	325 @ 1400	40
1960–63	DT8-207	8 In Head	3⅞ x 4⅛	390	7.30	207 @ 3400	354 @ 2400	50
1960–63	DT8-235	8 In Head	4⅛ x 4⅛	440	7.30	235 @ 3400	412 @ 2400	50

STARTING MOTOR SPECIFICATIONS

Unit Part No. ①	Rotation ②	Brush Spring Tension, Ounces	No Load Test			Torque Test		
			Amperes	Volts	R.P.M.	Amperes	Volts	Torque, Lb. Ft.
MAB-4093	C	42–53	60	5	3600	390	2	9.2
MAB-4098	C	42–53	60	5	3600	390	2	9.2
MAB-4118	C	42–53	60	5	3600	390	2	9.2
MAB-4123	C	42–53	60	5	3600	390	2	9.2
MAS-4102A	C	42–53	40	10	3900	340	4	13.2
MAU-4045	C	42–53	65	10	4500	350	4	11.1
ML-4307	C	42–53	80	10	3900	750	4	26.0
ML-4312	C	38–49	65	5	2250	370	2	10.3
ML-4318	C	38–49	65	5	2250	370	2	10.3
ML-4322	C	42–53	80	10	3900	750	4	26.0
1107959	C	24–28	65	5	5500	600	3	16
1107976	C	24–28	60	5	6000	600	3	15
1108006	C	24–28	60	5	6000	600	3	15
1108840	C	36–40	115	11.6	7000	570	2.3	20
1108863	C	36–40	100	23	8000	525	3	32
1108871	C	36–40	100	23	8000	525	3	32
1108872	C	36–40	100	23	8000	525	3	32
1108881	C	36–40	100	23	8000	525	3	32

① Stamped on name plate riveted to housing. ② C—Clockwise at drive end. CC—Counterclockwise at drive end.

TUNE UP & VALVE SPECIFICATIONS

Engine Model	Firing Order	Spark Plug		Ignition Timing		Cyl. Head Torque Lb. Ft.	Valve Seat Angle Degrees	Valve Clearance H—Hot C—Cold		Valve Spring Pressure Lb. @ Inch Length
		Type ⑦	Gap	Timing Mark	Location			Intake	Exhaust	
DT6-110	153624	J7	.025	8°BTC	Damper	100–105	30	.015H	.015H	183 @ 1.36
DT6-130	153624	J6	.025	4°BTC	Damper	100–105	30	.015H	.015H	183 @ 1.36
DT6-145	153624	J6	.025	2°BTC	Damper	100–105	30	.015H	.015H	183 @ 1.36
DT6-170	153624	J6	.025	2°BTC	Damper	100–105	30	.023C	.023C	183 @ 1.36
DT6-185	153624	J4	.025	6°BTC	Damper	100–105	30	.023C	.023C	183 @ 1.36
DT6-186	153624	J4	.025	6°BTC	Damper	100-105	30	.025C	.023C	183 @ 1.36
DT8-207	15486372⑤	H8	.025	3°BTC	Damper	100–105	30	.023C	.023C	183 @ 1.36
DT8-235	15486372⑤	H8	.025	3°BTC	Damper	100–105	30	.023C	.023C	183 @ 1.36
DT-252	153624	J7	.030	TDC	Pulley	65–70	②	.012H	.016H	53 @ 1 13/16
XL-264	153624	J8	.027	4°BTC	Flywheel	85–95	30	.025H	.025H	149 @ 1 11/16
XL-308	153624	J8	.027	⑥	Pulley	100–110	30	.021H	.021H	149 @ 1 11/16
XL-372	153624	J6	.030	⑥	Pulley	100–110	③	.021H	.021H	133 @ 1 45/64④
XL-406	153624	J6	.030	⑥	Pulley	100–110	③	.021H	.021H	133 @ 1 45/64④
XL-450	153624	J6	.030	⑥	Pulley	100–110	③	.021H	.021H	133 @ 1 45/64④
XL-501	153624	J6	.027	⑥	Pulley	100–110	③	.021H	.021H	133 @ 1 45/64④
K-6271	153624	J7	.027	8°BTC	Pulley	85–90	③	.017H	.022H	125 @ 1 7/64④
K-6330	153624	J7	.027	8°BTC	Pulley	85–90	③	.017H	.022H	125 @ 1 7/64④
K-6363	153624	J7	.027	5°BTC	Pulley	85–90	③	.017H	.022H	125 @ 1 7/64④
R-6572	153624	D9	.027	5°BTC	Flywheel	100–110	②	.020H	.024H	67 @ 2 1/8④
R-6602	153624	D9	.027	5°BTC	Flywheel	100–110	②	.020H	.024H	67 @ 2 1/8④
T-6427	153624	D16	.027	10°BTC	Flywheel	130–140	③	.017H	.022H	69 @ 1 39/64④
TDXB	153624	J8	.027	2°BTC	Flywheel	100	45	.010H	.016H	102 @ 2 5/32
JXB	153624	J6	.025	IGN	Flywheel	75	45	①	①	58 @ 1 19/32
JXC	153624	J6	.025	IGN	Flywheel	75	45	①	①	58 @ 1 19/32
JXD	153624	J6	.025	IGN	Flywheel	75	45	①	①	58 @ 1 19/32
JXLD	153624	J6	.025	IGN	Flywheel	75	45	①	①	58 @ 1 19/32
QXLD	153624	J6	.027	IGN	Flywheel	60	30	①	①	41 @ 1 9/32

①—See engine name plate.
②—Intake 30°, exhaust 45°.
③—Intake 15°, exhaust 45°.
④—For outer spring.
⑤—Cylinder numbering (front to rear): Right bank 1–2–3–4, left bank 5–6–7–8.
⑥—Center mark on pulley.
⑦—Champion. Normal service.

PISTON, PIN, RING, CRANKSHAFT & BEARING SPECIFICATIONS

Year	Engine Model	Wristpin Diameter	Piston Clearance, Inch ③	Ring End Gap, In. (Minimum)		Crankpin Diameter, Inch	Rod Bearing Clearance, In.	Rod Bolt Torque, Lb. Ft.	Main Bearing Journal Diameter, Inch	Main Bearing Clearance, Inch	Main Bolt Torque, Lb. Ft.
				Comp.	Oil						
1953–56	DT-252	.9375	⑤	.007	.007⑥	2.000–2.001	.0015	52½	2.4785–2.4795	.002	70
1952	JXB	1.000	.0025	.015	.015	1.987–1.988	.0025	52½	2.497–2.498	.0035	②
1952	JXC	1.000	.003	.015	.015	1.987–1.988	.0025	52½	2.497–2.498	.0035	②
1952	JXD	1.000	.004	.015	.015	1.987–1.988	.0025	52½	2.497–2.498	.0035	②
1952	JXLD	1.125	.0045	.015	.015	1.987–1.988	.0025	56	2.497–2.498	.0035	②
1953–56	K-6271	1.109	.005	.013	.013	2.248–2.249	.0015	72½	2.623–2.624	.0025	105
1953–56	K-6330	1.109	.005	.013	.013	2.248–2.249	.0015	72½	2.623–2.624	.0025	105
1953–56	K-6363	1.109	.005	.013	.013	2.248–2.249	.0015	72½	2.623–2.624	.0025	105
1952	QXLD	.875	.0025	.015	.015	1.987–1.988	.001	39	2.497–2.498	.0025	②
1952–56	R-6572	1.500	.005	.013	.013	2.999–3.000	.003	105	3.249–3.250	.003	①
1956–57	R-6602	1.500	.006	.010	.010	2.999–3.000	.002	105	3.249–3.250	.0035	④
1952–55	T-6427	1.250	.005	.013	.013	2.498–2.499	.002	105	2.873–2.874	.0025	①
1956–59	XL-264	.875	.001	.015	⑥	2.373–2.374	.0011–.0032	50	2.748–2.749	.0012–.0042	80
1956–59	XL-308	.919	.003	.010	⑥	2.122–2.123	.0007–.0032	65	2.7005–2.7015	.0013.–0043	105
1955–58	XL-372	1.109	.003⑦	.015	⑥	2.751–2.752	.0012–.0037	80	3.2495–3.2505	.0013–.0043	105
1955–59	XL-406	1.109	.003⑦	.015	⑥	2.751–2.752	.0012–.0037	80	3.2495–3.2505	.0013–.0043	105

PISTON, PIN, RING, CRANKSHAFT & BEARING SPECIFICATIONS continued

Year	Engine Model	Wristpin Diameter	Piston Clearance, Inch ③	Ring End Gap, In. (Minimum)		Crankpin Diameter, Inch	Rod Bearing Clearance, In.	Rod Bolt Torque, Lb. Ft.	Main Bearing Journal Diameter, Inch	Main Bearing Clearance, Inch	Main Bolt Torque, Lb. Ft.
				Comp.	Oil						
1955–59	XL-450	1.109	.003⑦	.015	⑥	2.751–2.752	.0012–.0037	80	3.2495–3.2505	.0013–.0043	105
1955–59	XL-501	1.109	.003⑦	.015	⑥	2.751–2.752	.0012–.0037	80	3.2495–3.2505	.0013–.0043	105
1960–63	DT6-110	1.125	.003	.012	.012	2.1705–2.1712	.001–.0032	65–70	2.4975–2.4982	.001–.0035	85–90
1960–63	DT6-130	1.125	.003	.012	.012	2.1705–2.1712	.001–.0032	65–70	2.4975–2.4982	.001–.0035	85–90
1960–63	DT6-145	1.125	.004	.012	.012	2.1705–2.1712	.001–.0032	65–70	2.4975–2.4982	.001–.0035	85–90
1960–63	DT6-170	1.0625	.004	.015	.012	2.3093–2.3100	.001–.0032	65–70	2.7485–2.7492	.001–.0035	85–90
1960–61	DT6-185	1.0625	.004	.012	.012	2.3093–2.3100	.001–.0032	65–70	2.7485–2.7492	.001–.0035	85–90
1962–63	DT6-186	1.0625	.004	.012	.012	2.3093–2.3100	.001–.0032	65–70	2.7485–2.7492	.001–.0035	85–90
1960–63	DT8-207	1.0625	.0015	.015	.012	2.4978–2.4985	.001–.0032	65–70	2.9976–2.9988	.0015–.0044	85–90
1960–63	DT8-235	1.0625	.0015	.015	.012	2.4978–2.4985	.001–.0032	65–70	2.9976–2.9988	.0015–.0044	85–90

① 105 lb. ft. for ½″ nut, 135 lb. ft. for 9/16″ nut.
② Front and intermediate 70 lb. ft., center and rear 60 lb. ft.
③ Pistons removed from above.
④ For ½″ 90 lb. ft., for 9/16″ 105 lb. ft.
⑤ Piston is fitted so that it supports its own weight in any portion of the cylinder with all parts clean and dry.
⑥ No gap on U-Flex rings—ends butt.
⑦ No. 6 cylinder .004″.

WHEEL ALIGNMENT SPECIFICATIONS

Model	Caster, Deg.	Camber, Deg.	Toe-In, Inch	Kingpin Inclination, Deg.
1960-63 MODELS				
Conventional 4x2				
2000, 2020	2	1	0–⅛	8
3000, 4000	2	1	0–⅛	8
3020, 4020	1½	1	0–⅛	5½
5000, 5020	1½	1	0–⅛	5½
Conventional Tandem				
3300, 3320	1½	1	0–⅛	5½
4300, 4320, 4360	1½	1	0–⅛	5½
5300, 5360	1½	1	0–⅛	5½
90″ Cab Conventional 4x2				
D3000, D4000	2	1	0–⅛	8
D3020, D4020	1½	1	0–⅛	5½
D5000, D5020	1½	1	0–⅛	5½
D6000, D6020	3¼	1	0–⅛	5½
D6300, D6320	3¼	1	0–⅛	5½
D6360	3	1	1/16–⅛	8
D7000, D7020	3¼	1	0–⅛	5½
D7300	3¼	1	0–⅛	5½
D7320	3	1	1/16–⅛	5½
Tilt Cab Forward 4x2				
534CG, CGH	1½	1	0–⅛	5½
634CG, CGH	1½	1	0–⅛	5½
734CG	1½	1	0–⅛	5½
Tilt Cab Forward Tandem				
634CG	1½	1	0–⅛	5½
734CG Timken	1½	1	0–⅛	5½
734CG Shuler	1	1	⅛	0
Conventional Diesels				
921D, 923D Timken	1½	1	0–⅛	5½
921D, 923D Shuler	1	1	⅛	0
90″ Cab Conventional Diesel				
990 Timken	1½	1	0–⅛	5½
990 Shuler	1	1	⅛	0
1959 MODELS				
Conventional 4x2				
DT-200	1	1	⅛	8
DT-300	1	1	⅛	5½
534	1	1	⅛	8
534C	1	1	⅛	5½
634, 634C	1	1	⅛	5½
723 Series①	1	1	⅛	5½
731C①	1	1	⅛	5½
734C, 734R①	1	1	⅛	5½
738R①	1	1	⅛	5½
831R①	1	1	⅛	5½
838R①	1	1	⅛	5½
921C, 923C①	1	1	⅛	0
921D, 923D①	1	1	⅛	5½
931, 931C, 933C①	1	1	⅛	5½
950①	1	1	⅛	5½
Six Wheelers				
534	1½	1	⅛	8

continued

WHEEL ALIGNMENT SPECIFICATIONS continued

Model	Caster, Deg.	Camber, Deg.	Toe-In, Inch	Kingpin Inclination, Deg.
634, 634C	1½	1	⅛	5½
723 Series①	1½	1	⅛	5½
731C①	1½	1	⅛	5½
734C, 734R①	1½	1	⅛	5½
738R①	1½	1	⅛	5½
831R①	1½	1	⅛	5½
838R①	1½	1	⅛	5½
921C, 923C①	1½	1	⅛	0
921D, 923D①	1½	1	⅛	5½
931, 931C①	1½	1	⅛	5½
933C, 950①	1½	1	⅛	5½

1952-58 MODELS

Conventional 4 x 2

Model	Caster, Deg.	Camber, Deg.	Toe-In, Inch	Kingpin Inclination, Deg.
323, 422	1	1	⅛	8
323C, 422C	1	1	⅛	5½
430, 431, 522	1	1	⅛	8
430C, 522C	1	1	⅛	5½
530, 531, 532	1	1	⅛	8
530C, 622, 622C	1	1	⅛	5½
630	1	1	⅛	4
630C, 660, 662	1	1	⅛	5½
720, 720C	1	1	⅛	5½
723 Series	1	1	⅛	5½
730, 730C	1	1	⅛	5½
830, 830C, 831	1	1	⅛	5½
920, 922, 923	1	1	⅛	5½
921, 921N, 921R	1	1	⅛	5½
921C, 923C	1	1	⅛	5½

Six Wheelers

Model	Caster, Deg.	Camber, Deg.	Toe-In, Inch	Kingpin Inclination, Deg.
422, 522	1½	1	⅛	5½
530, 531	1½	1	⅛	5½
622, 630C	1½	1	⅛	5½
630	1½	1	⅛	4
720, 720C, 723 Series	1½	1	⅛	5½
730, 730C	1½	1	⅛	5½
830, 830C, 831	1½	1	⅛	5½
920, 921, 922, 923	1½	1	⅛	5½
921C, 923C	1½	1	⅛	0
950	1½	1	⅛	5½

①—If equipped with Shuler FE-15 or FE-18 axle, specifications are: caster 1°, camber 1°, toe-in ⅛″, kingpin angle 0°.

DISTRIBUTOR SPECIFICATIONS

Unit Part No. ①	Rotation ②	Cam Angle, Degrees	Breaker Gap, In.	Condenser Capacity, Mfds.	Breaker Arm Spring Tension, Oz.	Centrifugal Advance Deg. @ R.P.M. of Dist.		Vacuum Advance		
						Advance Starts	Full Advance	Inches of Vacuum to Start Plunger Movement	Inches of Vacuum For Full Plunger Travel	Maximum Vacuum Advance, Dist. Degrees
1AD-4016A	C	39	.020	.23–.26	17–20	1 @ 400	12 @ 1500	None	None	None
1AD-4019A	C	39	.020	.23–.26	17–20	1 @ 500	10 @ 1500	None	None	None
1AD-4019A-1	C	39	.020	.23–.26	17–20	1 @ 500	10 @ 1500	None	None	None
1AD-4026A	C	39	.020	.23–.26	17–20	1 @ 275	20 @ 1200	None	None	None
1AD-4026C	C	39	.020	.23–.26	17–20	1 @ 275	15 @ 1400	None	None	None
1AD-4034A	C	39	.020	.23–.26	17–20	1 @ 375	12 @ 1475	None	None	None
1AD-4035	CC	39	.020	.23–.26	17–20	1 @ 325	18 @ 1450	None	None	None
1AD-6001-2B	C	39	.020	.23–.26	17–20	1 @ 450	10 @ 1500	None	None	None
1AD-6001-2F	C	39	.020	.23–.26	17–20	1 @ 275	15 @ 1400	None	None	None
1AD-6001-2L	C	39	.020	.23–.26	17–20	1 @ 450	10 @ 1500	None	None	None
1AD-6009-2A	C	39	.020	.23–.26	17–20	1 @ 275	15 @ 1400	None	None	None
1GC-4065	C	39	.020	.20–.25	17–20	1 @ 450	6 @ 1150	None	None	None
1GC-4272A	C	39	.020	.20–.25	17–20	1 @ 375	6 @ 900	None	None	None
1GC-4808A	C	39	.020	.20–.25	17–20	1 @ 500	10 @ 1500	None	None	None
1GW-4114A	C	36	.020	.20–.25	17–20	1 @ 450	6 @ 1150	None	None	None
1GW-4114D	C	36	.020	.20–.25	17–20	1 @ 450	6 @ 1150	None	None	None
1GW-4114E	C	36	.020	.20–.25	17–20	1 @ 440	9 @ 1500	None	None	None
1GW-4114F	C	36	.020	.20–.25	17–20	1 @ 500	10 @ 1500	None	None	None
1GW-4123B	C	36	.020	.20–.25	17–20	1 @ 450	6 @ 1150	None	None	None
1GW-6001-2	C	36	.020	.20–.25	17–20	1 @ 475	10 @ 1500	None	None	None
1110227	C	31–37	.022	.18–.23	17–21	1 @ 350	14 @ 1350	5	15	6
1110620	C	26–33	.016	.20–.25	19–23					
1110621	C	26–33	.016	.20–.25	19–23					
1110631	C	26–33	.016	.20–.25	19–23	1 @ 275	14 @ 1200	None	None	None
1110632	C	26–33	.016	.20–.25	19–23	1 @ 325	14 @ 1200	None	None	None
1111660	C	30	.016	.20–.25	19–23	1 @ 325	15 @ 1500	None	None	None

DISTRIBUTOR SPECIFICATIONS continued

Unit Part No. ①	Rotation ②	Cam Angle, Degrees	Breaker Gap, In.	Condenser Capacity, Mfds.	Breaker Arm Spring Tension, Oz.	Centrifugal Advance Deg. @ R.P.M. of Dist.		Vacuum Advance		
						Advance Starts	Full Advance	Inches of Vacuum to Start Plunger Movement	Inches of Vacuum For Full Plunger Travel	Maximum Vacuum Advance, Dist. Degrees.
1111818	C	31–37	.022	.20–.25	17–21	1 @ 475	10 @ 1550	None	None	None
1111866	C	38–45	.016	.20–.25	19–23					
1111905	C	38–45	.016	.20–.25	19–23	1 @ 450	15 @ 1700	None	None	None
1111922	C	38–45	.016	.20–.25	19–23	1 @ 450	13 @ 1375	None	None	None
1111923	C	38–45	.016	.20–.25	19–23	1 @ 425	11 @ 1700	None	None	None
1112405	C	31–37	.022	.20–.25	19–23					

① Stamped on plate riveted to housing. ② C—Clockwise when viewed from top. CC—Counterclockwise when viewed from top.

GENERATOR & REGULATOR SPECIFICATIONS

★To Polarize Generator: For internally grounded systems, disconnect field lead from regulator and momentarily flash this lead to regulator battery terminal. For externally grounded systems, reconnect leads to regulator; then momentarily connect a jumper wire from the "Gen" or "Arm" to the "Bat" terminals of the regulator.

Generator						Regulator					
Gen. No. ①	Rotation and Ground Polarity ③	Brush Spring Tension, Oz.	Rated Cap. Amps.	Gen. Field Ground Location★	Field Current	Reg. No. ②	Cutout Relay		Voltage Setting	Current Setting	Current & Voltage Reg. Arm. Air Gap, In.
							Closing Voltage	Arm. Air Gap, In.			
GDJ-4822C	C-P	36–60	55	Internal	1.1–1.3④	VRH-4102B	13.2	.062	14.1	55	⑥
GDJ-4838A	C-P	36–60	55	Internal	1.1–1.3④	VRH-4102B	13.2	.062	14.1	55	⑥
GDZ-4811A	C-P	35–53	35	External	1.3–1.5⑤	VRP-6001A	6.5	.032	7.2	35	.050
GGA-4814A	C-P	34–41	40	External	1.1–1.3④	VAT-4001A	13.4	.032	14.2	40	.050
GGA-4814H	C-P	34–41	40	External	1.1–1.3④	VAT-4001A	13.4	.032	14.2	40	.050
GGJ-4802A	C-P	34–41	50	External	1.4–1.6⑤	VAV-4002A	6.5	.032	7.2	50	.050
GGJ-4803B	C-P	34–41	50	External	1.4–1.6⑤	VBA-4103A	6.5	.032	7.0	50	.050
GGJ-4803C	C-P	34–41	50	External	1.4–1.7⑤	VBA-4205A	6.5	.032	7.1	50	.050
GGW-6001G	C-P	35–53	40	External	1.4–1.5⑤	VRP-6001B	6.5	.032	7.2	40	.050
GGW-6001R	C-P	35–53	40	External	1.4–1.5⑤	VRP-6001B	6.5	.032	7.2	40	.050
GGW-6018A	C-P	35–53	40	External	1.6–1.7⑤	VRP-4004P	6.5	.032	7.2	40	.050
1100031	C-P	28	40	External	1.87–2.0⑦	1118842	6.3	.020	7.2	40	.075
1102040	C-N	28	30	External	1.48–1.62⑧	1119001	12.6	.020	14.3	30	.075
1102044	C-N	28	30	External	1.48–1.62⑧	1119001	12.6	.020	14.3	30	.075
1102044	C-P	28	30	External	1.48–1.62⑧	1118839	12.6	.020	14.3	30	.075
1102059	C-N	28	30	External	1.48–1.62⑧	1119001	12.6	.020	14.3	30	.075
1102059	C-P	28	30	External	1.48–1.62⑧	1118839	12.6	.020	14.3	30	.075
1102747	C-P	28	40	External	1.87–2.0⑦	1118382	6.4	.020	7.2	42	.075
1102777	C-P	28	45	External	1.87–2.0⑦	1118732	6.4	.020	7.4	47	.075
1102820	C-P	28	45	External	1.87–2.0⑦	1118828	6.3	.020	7.2	45	.075
1105127	C-N	28	35	External	2.73–3.00	1119604	12.0	.020	14.3	35	.075
1105890	C-P	28	32	External	1.62–1.82⑦	1118387	6.4	.020	7.2	32	.075
1106805	CC-P	20	50	External	1.37–1.50⑧	1118338	12.8	.020	14.3	50	.075
1106808	C-P	20	50	External	1.37–1.50⑧	1118339	12.6	.020	14.2	50	.075
1106822	C-P	20	50	External	1.37–1.50⑧	1119156	12.6	.020	14.2	50	.075
1106986	C	20	50	External	2.14–2.28	1119606	12.0	.020	14.3	50	.075
1106990	C	20	50	External	2.14–2.28	1119606	12.0	.020	14.3	50	.075
1106991	C	20	55	External	2.14–2.28	1119605	12.0	.020	14.3	55	.075

①—Stamped on plate riveted to housing.
②—Stamped on regulator base.
③—C—Clockwise at drive end.
CC—Counterclockwise at drive end.
P—Positive. N—Negative.
④—At 10 volts.
⑤—At 5 volts.
⑥—Voltage regulator .041", current regulator .048".
⑦—At 6 volts.
⑧—At 12 volts.

Engine Section

CYLINDER HEAD, REPLACE

All Engines

When removing a cylinder head, a chisel or screw driver should never be used to pry it loose from the cylinder block. Use an eyebolt in the third or fourth spark plug hole, lifting up on the eyebolt while tapping lightly around the edges of the head with a lead or rawhide hammer or mallet. Be sure that all the head stud nuts or bolts have been removed before starting to remove the head.

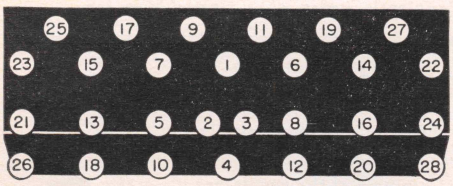

Fig. 1 Cylinder head tightening sequence. Continental engines

In replacing the head, the stud nuts or bolts at the center of the head should be tightened first and then work outward from side to side and to the ends, Figs. 1 to 5.

Draw the nuts or bolts down evenly until all are normally tight. Then after the engine has run long enough to warm it up, make a final tightening with a torque wrench to the torque loads given in the *Tune Up & Valve Specifications* table.

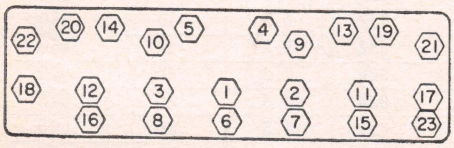

Fig. 2 Cylinder head tightening sequence. XL engines

On overhead valve engines, be sure to check the valve clearances after the final tightening.

ROCKER ARM SERVICE

Overhead Valve Engines

Sludge and gum formation in the rocker arms and shafts will restrict the normal flow of oil to the rocker arms and valves. Each time the rocker arm and shaft assemblies are removed, they should be disassembled and thoroughly cleaned.

When disassembling rocker arms, place all parts on the work bench in their proper sequence to insure correct assembly.

Clean all gum and sludge formation from the inside and outside of the shafts. Clean oil holes and passages in the rocker arms and shafts. Clean the oil connector. Inspect the shafts for wear.

Check the ball ends of the rocker arms to be sure they are not pitted or rough. If used in this condition, it will be difficult to maintain valve clearances.

Service Note, XL Engines

Note that the third bolt from the rear on the left side of the cylinder head is drilled with an oil hole which supplies oil to the rocker arms. Fig. 6 shows the rocker arm assembly on these engines.

VALVES, ADJUST

All Engines

Adjust the valves to the clearances given in the *Tune Up & Valve Specifications* table. If the valves are to be adjusted warm, run the engine for about 30 minutes to normalize the expansion of all parts.

On overhead valve engines, be sure the cylinder head is properly tightened down before adjusting valve clearances.

VALVES, REMOVE

L-Head Engines

After taking off the cylinder head, remove the valve chamber covers and use cloth to block off the holes in the valve chamber to prevent the valve locks from falling into the crankcase.

With a suitable valve spring compressor, raise the springs on those valves which are closed and remove the valve locks. Then turn the crankshaft until those valves which are open are closed and remove the remaining valve locks.

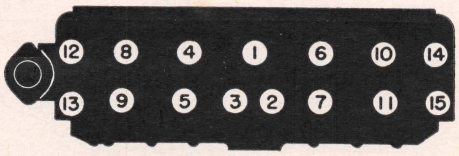

Fig. 3 Cylinder head tightening sequence. Nash DT-252 engine

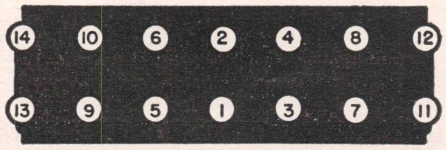

Fig. 4 Cylinder head tightening sequence. Reo 6 cyl. engines

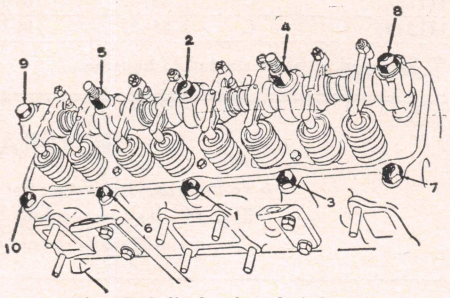

Fig. 5 Cylinder head tightening sequence. Reo V8 engines

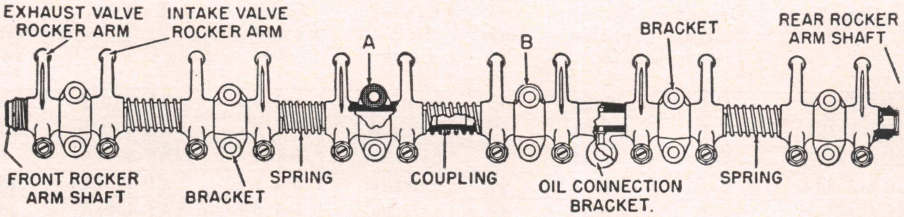

Fig. 6 Rocker arm assembly. XL engines

Remove all valves and place them in a board with numbered holes so that they can be identified as to the valve port from which they were removed.

Overhead Valve Engines

After removing the cylinder head and rocker arm assembly, use a suitable spring compressor to compress the springs. Remove the valve locks and springs. Check the keeper grooves in the valve stems for burrs and remove any burrs with a file to prevent scoring of valve guides. Remove the valves and place them in a board with numbered holes so they can be replaced in the same valve port from which they were removed.

VALVES, GRIND

All Engines

Clean the valves with a wire wheel brush, making sure that all carbon is removed from the top and bottom of the heads as well as the gum which might have accumulated on the stems.

In refacing valves, take off only the minimum amount of metal required to clean up the valve faces. If the outer

edge of the valve becomes too thin or sharp due to excessive grinding, the valve must be replaced. In other words, the valve head margin must be at least $\frac{3}{64}$", otherwise the valve must be replaced. This margin is the area above the contact surface of the valve face.

Inspect the valve seats in the block or head for cracks, burns, pitting, ridges or improper angle. During any general engine overhaul, it is advisable to reface the valve seats regardless of their condition. If new valve guides are required, they must be installed and reamed before refacing the seats if the equipment used for refacing has a valve guide pilot.

The valve seat width after refacing should be $\frac{5}{64}$" to $\frac{7}{64}$" on the intake. The width of exhaust seats should be $\frac{7}{64}$", Fig. 7.

A simple check can be made to prove the fit of the valve in the valve seat by spreading a thin film of Prussian Blue on the valve face and inserting the valve in the valve seat. With hand pressure, rotate the valve ¼ turn, remove it and observe the transfer of Prussian Blue to the valve seat. An uneven transfer will indicate an inaccurate valve and valve seat operation.

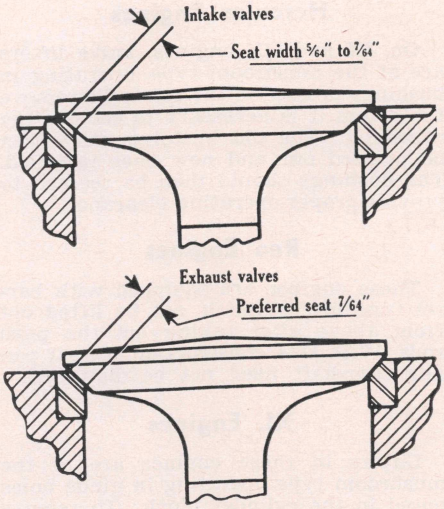

Fig. 7 Valve seat width recommendations

VALVE ROTATORS

Continental, Hercules, Reo & XL Engines

The parts involved in the rotating mechanism are a special spring seat retainer, a pair of flat half-moon keys, a close fitting cap located on the valve stem and a specially constructed valve stem, Fig. 8.

In order to accommodate valve expansion, the valve lash must be maintained. When camshaft rotation causes this lash or clearance to be taken up, the cap on the valve stem causes the valve keys to lower the spring retainer, removing the load of the valve springs from the valve *before* the valve is raised from its seat. A clearance of .002-.006" should be maintained between the end face of the valve stem and cap. This is the distance the spring retainer is lowered *before* the valve is moved. The slow valve rotating motion is caused by the vibration of the valve, the flowing of exhaust gases around the valve head, and a slight rotating motion imparted to the valve by the valve spring.

Whenever valve work is done, check the clearance, using the special gauge shown in Fig. 9. If there is no clearance, grind off the end of the valve stem. If the clearance is too great, grind off the open end of the valve cap.

If the special gauge is not available, a check for clearance can be made by holding the assembled valve and rotating mechanism in the hands. With one hand, press down on the valve cap and turn the valve with the other hand. If the valve turns readily, at least it indicates that there is some clearance present.

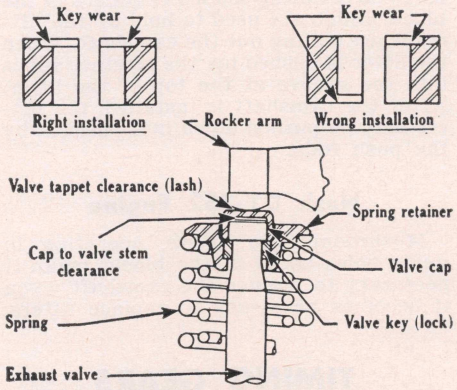

Fig. 8 Rotating exhaust valve mechanism. Continental, Hercules, Reo and XL engines

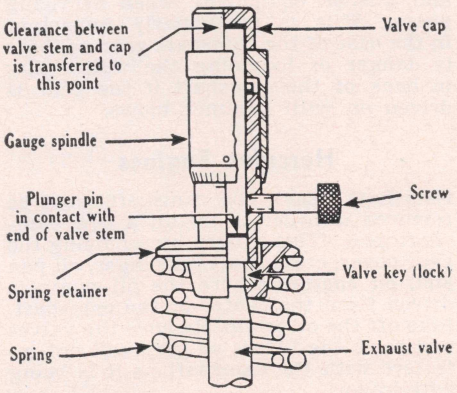

Fig. 9 Using special gauge for checking clearance between valve stem and valve stem cap on engines with exhaust valve rotators

VALVE SEAT INSERTS

Continental, Reo & XL Engines

Since these inserts are too hard to reface by the ordinary hand grinding method, a high speed grinder or special lapping equipment should be used to perform this operation. When using this equipment, be sure valve guides are clean and the valve guide pilot is a snug fit in order to assure a concentric finish. Finished seats should be checked with a dial indicator and runout should not exceed .001".

To remove an insert (if a suitable puller is not available), drill two holes at opposite sides of the insert but not all the way through. Then cut out the undrilled portion with a sharp chisel and remove the two pieces.

To install a new insert, first remove all burrs and sharp edges from the seat recess. Then chill the new insert with "dry ice" to obtain maximum contraction of the metal and place it in the recess. If necessary, the insert may be pounded in by using a round driver the same size as the insert and pounding on same with a hammer.

If a standard insert is too loose, secure an oversize insert. Of course, the recess should be bored out to accommodate the oversize insert.

When installed, peen the block or head around the insert bore to insure the insert remains in place, Fig. 10.

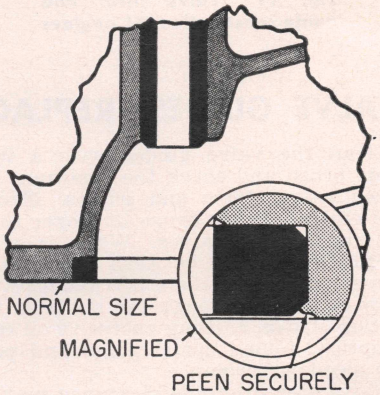

Fig. 10 Magnified view showing how cylinder head or block should be peened to secure valve seat insert in place

VALVE SPRINGS

After removing the valve springs, wash them with gasoline or other suitable solvent. Examine the springs for damage or corrosion due to acid etching, which will develop into surface cracks and cause spring failure.

Check the valve spring tension on a spring testing fixture if one is available. If not available, at least check the free length of each spring by standing it alongside a new spring. Any spring that does not conform to the pressure specifications given in the *Tune Up & Valve Specifications* table within 10% should be replaced. Likewise, any spring that stands shorter than the new spring used for comparison should be discarded. Of course, cocked springs should be scrapped.

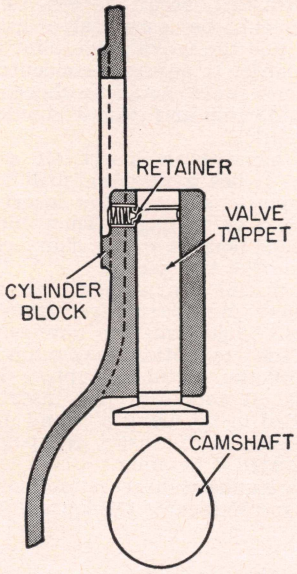

Fig. 11 Valve lifter and guide construction. XL engines

VALVE GUIDES, REPLACE

Clean the valve guides with a wire guide brush and check the clearance between valve stems and guides. Excessive clearance will cause improper seating and burned valves. When there is too much clearance between intake valve stems and guides, there is a tendency to draw oil vapor through the guide on the suction stroke, causing excessive oil consumption, fouled spark plugs and poor low speed performance.

Valve stem-to-guide clearance may be checked with a dial indicator or a suitable plug gauge. Lacking either of these tools, take a new valve and place it in each valve guide and feel the clearance by moving the valve stem back and forth. If this check indicates excessive clearance, it will be necessary to replace the valve guide.

If the clearance is not excessive when checking with a new valve but is excessive when checked with the old valve, the old valve stem is worn and a new valve must be installed.

Valve guides may be removed and installed with a suitable puller and installer made for the purpose. If such equipment is not available, the old guides can be driven out or they can be pulled out by using a piece of pipe together with a long bolt and suitable washers.

After the new guides have been installed, they should be reamed to round out the holes and to provide adequate operating clearances.

VALVE LIFTERS

Continental Engines

Valve lifters are of the mushroom type carried in guide clusters bolted to the cylinder block. When worn, it is usually easier to replace the entire lifter and cluster unit rather than try to use old lifters with new brackets and vice versa.

Hercules Engines

On JX and QX engines, valve lifters are of the mushroom type, operating in bushings pressed in the block. To remove the lifters it is necessary to remove the camshaft. The old bushings may then be pressed out and new ones installed. The bushings should then be reamed to provide proper operating clearance.

Reo Engines

These engines are equipped with barrel type lifters which can be lifted out from above after taking out the push rods. With this construction the oil pan and camshaft need not be disturbed.

XL Engines

Lifters in these engines are of the mushroom type operating in guide holes bored in the cylinder block. To remove lifters, therefore, it is necessary to take out the camshaft and remove the lifters through the bottom of the engine.

As shown in Fig. 11, the valve lifter bores have spring-loaded retainers in the block, which are used to hold up the lifters when pulling out the camshaft. When the lifter is pushed up, the retainer snaps into the groove at the top of the lifter. After the camshaft is installed, the lifters may be pushed down into position by the push rods.

Nash DT-252 Engine

Mushroom type lifters, operating in guide holes bored in the block, make it necessary to remove the camshaft when it becomes necessary to replace lifters.

TIMING GEARS

Continental & XL Engines

For correct valve timing, timing gears should be assembled as shown in Figs. 12 and 13. Always use suitable puller and pusher equipment when servicing gears. This is particularly important in the case of the camshaft gear as there is danger of loosening the welch plug in back of the camshaft if the gear is driven on with hammer blows.

Hercules Engines

Camshaft Gear—The camshaft must be removed in order to install a new camshaft gear. This is done by removing the gear cover, crankshaft oil slinger, oil pan and, on engines where the oil pump is driven from the center of the camshaft, take off the oil pump. Remove the valves and raise the lifters so they will not interfere with the camshaft as it is being withdrawn.

On QXLD engines, the camshaft gear can be pressed on from the rear against the flange on the front of the shaft.

On all engines, valve timing is correct when the marked teeth are meshed.

Crankshaft Gear—Since the crankshaft gear will very likely become damaged when removed, a new one should be installed. When doing so, heat the gear in boiling water to obtain maximum expansion of the metal and coat the shaft

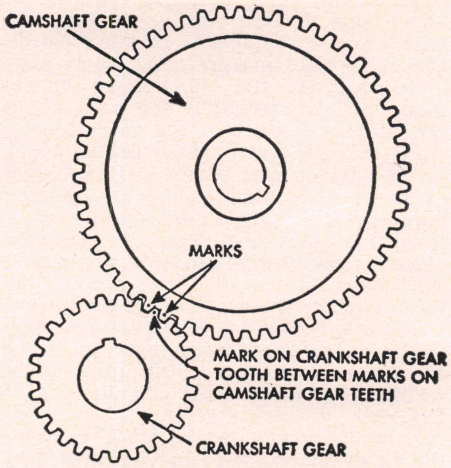

Fig. 12 Valve timing. Continental engines

with white lead to make assembly easier. For correct valve timing, match the marked tooth of the crankshaft gear with the marked tooth of the camshaft gear.

Idler Gear—The idler gear may easily be removed by pulling it forward out of the case. However, on JX and QX engines, the gear can only be pressed on from the rear against the flange on the front of the shaft.

Gear Cover—The outside of the crankshaft and the boss of the gear cover (and oil pan on some engines) must have sufficient clearance to permit a .010" feeler gauge (approximately) to be inserted at all points. If the cover rubs against the crankshaft at any point, an oil leak may result. This can be corrected by either shifting the gear cover enough to eliminate the rub or by filing the gear cover boss to obtain sufficient clearance.

Reo Engines

Valve timing is correct when the timing gears are installed so that the timing marks on the gears are meshed. Fig. 14 illustrates the relationship of the parts on V8 engines.

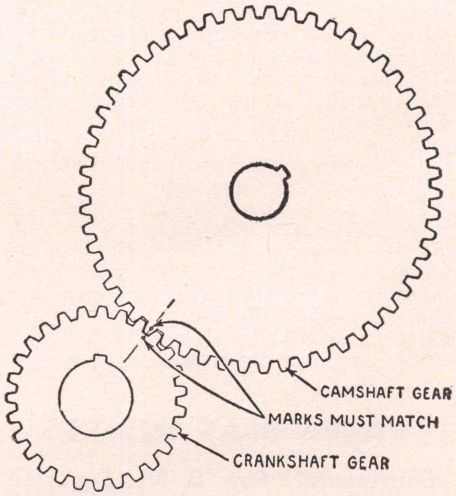

Fig. 13 Valve timing. XL engines

TIMING CHAIN

Nash DT-252 Engine

When installing a new chain, assemble it over the sprockets so that when the camshaft sprocket is bolted to its hub, the timing marks on both sprockets are opposite each other and in line with the centerline of both the camshaft and crankshaft.

CAMSHAFT & BEARINGS

Continental & XL Engines

Camshaft end play is controlled by a thrust plate behind the camshaft gear. End play should be held to about .005″ and can be checked by forcing the camshaft back to the limit of its travel and inserting a feeler gauge between the thrust plate and the front end of the camshaft. If clearance is excessive, install a new thrust plate.

Camshaft bearings should be installed in sets and care must be exercised to see that the oil holes in the bearings and the oil feed holes in the block are aligned to insure adequate lubrication.

After installing the bearings, they should be line-bored to round out the holes and to provide a running clearance of .0015-.0025″.

Hercules Engines

On all engines, camshaft end thrust is controlled by a special screw through the gear cover, Fig. 15. At long intervals or when the engine has been disassembled for repairs, the end play should be checked. If an adjustment is required, loosen the lock nut and tighten the screw until the fibre plug at its inner end contacts the steel plug in the front end of the camshaft. Then back off the screw ⅛ turn and tighten the lock nut. (The idler and accessory shaft adjustment is made in the same manner.)

On engines having the cylinder block separate from the crankcase, any reaming of camshaft bearings should be done after the block is bolted to the crankcase to assure proper camshaft fit.

Nash DT-252 Engine

Camshaft end thrust is controlled by flanges on the front bearing. If end play becomes excessive, remove the old bearing and install a new one.

When necessary to install camshaft bearings due to wear, they should be pressed in place and reamed to round out the holes and to provide adequate running clearance.

Reo Engines

Camshaft end play is controlled by a thrust plate just behind the camshaft gear. End play should be held to about .005″ and can be checked by forcing the shaft back to the limit of its end play and inserting a feeler gauge between the thrust plate and the front end of the shaft. If end play is excessive, install a new thrust plate.

On these engines, steel-backed, lead babbitt-lined split bearings are used.

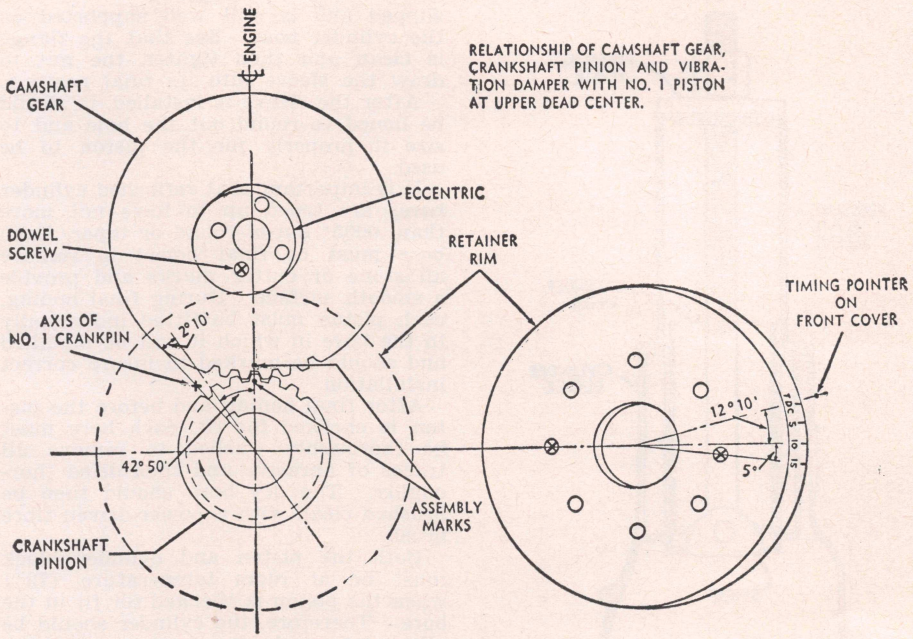

Fig. 14 Relationship of timing gears and related parts. Reo V8 engines

PISTONS & RODS, REMOVE

All Engines

After removing the cylinder head and oil pan, examine the cylinder bores above the ring travel area. If the bores are worn so that a shoulder or ridge exists at this point, remove the ridge with a ridge reamer to avoid damaging rings or cracking ring lands of pistons during removal.

Before removing pistons, mark the pistons with a file on the inside of the skirt to indicate the bore from which each piston was removed and also its position in the bore with relation to the camshaft side of the engine. Connecting rods should also be suitably marked if they are not marked already.

Remove the connecting rod caps and push the assemblies out of the cylinders, using care to prevent rod bolts from nicking crankshaft journals. It is advisable to install caps on rods as they are removed to avoid mixing parts.

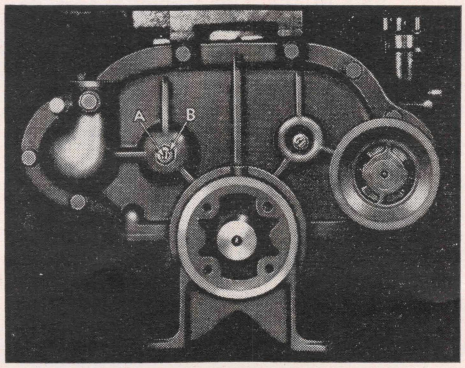

Fig. 15 Arrows indicate adjusting screws which control end play of camshaft, idler shaft and accessory shaft. Hercules JX and QX engines

PISTONS & RODS, ASSEMBLE

All Engines

If the pistons and rods have factory markings to indicate their position in the cylinders, assemble and install them according to these marks, or according to the marks made during removal if they were not otherwise marked, Fig. 16.

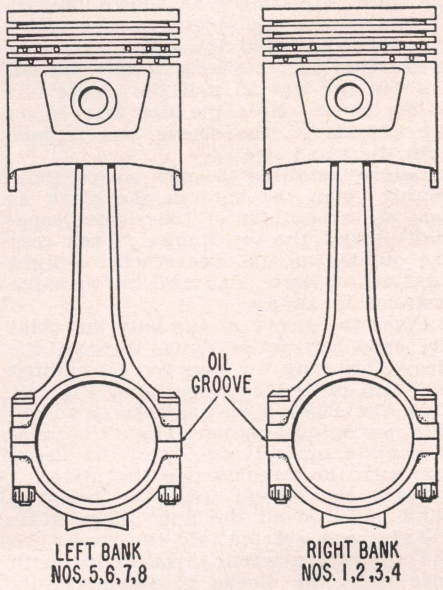

Fig. 16 Correct assembly of pistons and rods. Reo V8 engines

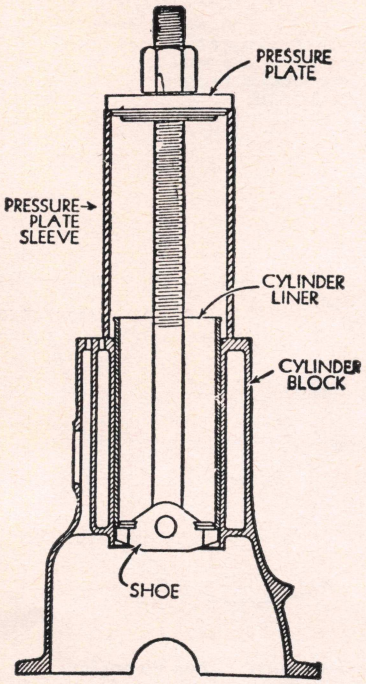

Fig. 17 Removing cylinder sleeve. XL engines

CYLINDER SLEEVES

XL Engines

Cylinder sleeves or liners used in these engines are of the dry type and can be removed and installed with the equipment shown in Figs. 17 and 18.

These sleeves may be rehoned to take .005″ and .010″ oversize pistons. If necessary to exceed .010″ oversize, a new sleeve and piston should be installed.

To remove a sleeve of this type, use the puller equipment as shown in Fig. 17. Make sure the shoe is square under the sleeve and that the entire assembly is centered on the sleeve to be removed. Tighten the nut to pull the sleeve out of the block. Note the size marked on the outside of the sleeve and replace with the same size.

Before installing the new sleeve, thoroughly clean the bore in the block as well as the outside of the sleeve, especially under the top flange. Then coat the outside of the sleeve with a light mixture of white lead and oil to make installation easier.

Place the sleeve in the bore and pass the shoe and screw down through the sleeve, bringing the shoe to rest against the wall of the cylinder bore, Fig. 18. Turn the shoe on an angle so as to obtain maximum bearing. Place the pressure plate squarely on top of the sleeve and turn the nut down to the plate.

Start the sleeve into the bore by hand pressure on the nut. Then after the sleeve is started into the bore, turn the nut with a wrench, continuing with care until the sleeve is almost in its final position. Release the nut slightly and check to see that the shoe has not slipped and is still well supported on the cylinder boss. See that the flange is clean and then tighten the nut to draw the sleeve into its final position.

After the sleeve is installed, it should be honed to round out the hole and to size it properly for the piston to be used.

It is important that refinished cylinder bores are trued up to have not more than .0005″ out-of-round or taper. Each bore must be final honed to remove all stone or cutter marks and provide a smooth surface. During final honing, each piston must be fitted individually to the bore in which it will be installed and should be marked to insure correct installation.

After final honing and before the piston is checked for fit, each bore must be thoroughly washed to remove all traces of abrasive and then dried thoroughly. The dry bore should then be brushed clean with a power-driven fibre brush.

Both the piston and cylinder block must be at room temperature (70°) when the piston is checked for fit in the bore. Therefore, the cylinder should be allowed to cool after boring or honing and before the piston fit is checked. This is important because a difference of 10° between the temperature of parts is sufficient to produce a variation of .0005″.

With the piston rings and pins removed, and cylinder wall and piston dry and clean, insert the piston upside down in the bore. Use a feeler ½″ wide which is long enough to extend the full length of the piston. The thickness of the feeler should be the same as the clearance given in the *Pistons, Rings & Bearings* table. With the feeler hooked to a spring scale, a pull of 5 to 10 lbs. should be required to pull the feeler past the piston.

Reo Engines

Cylinder blocks are equipped with wet type cylinder sleeves. Each sleeve is sealed by the cylinder head and head gasket at the top, while rubber packing rings are fitted in a recessed groove in the bottom to keep the lower end water tight and permit the required expansion.

Special sleeve pullers are commercially available, and after the sleeve is pulled and the rubber ring removed, clean the ring grooves. The shoulders on the new sleeve and in the block should also be cleaned. Always use new rubber packing ring, and apply a thin film of hydraulic brake fluid, castor oil or a thick soap solution around the lower end of the sleeve to make installation easier.

When installing the sleeve, note when the end enters the rubber packing. Then push the sleeve down in place so that its top shoulder seats in the corresponding shoulder in the block. The final position of the sleeve is when it protrudes .001-.003″ above the top surface of the block.

PISTONS, REPLACE

All Engines

Before a honing or boring operation is started, measure all new pistons with a micrometer at points 90° away from the piston pin. Then select the smallest piston for the first fitting. The slight variations usually found between pistons in a set may provide for correction in case the first piston is fitted too free.

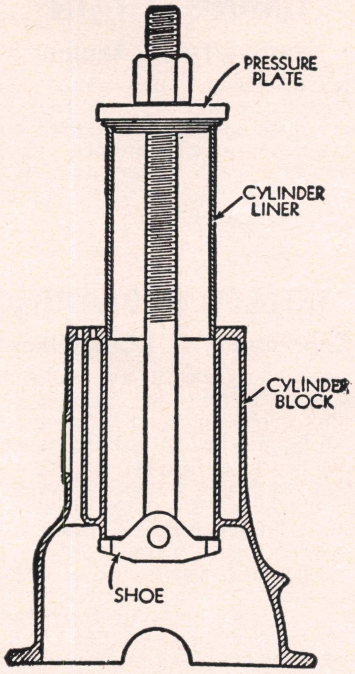

Fig. 18 Installing cylinder sleeve. XL engines

PISTON RINGS, REPLACE

All Engines

When new rings are to be installed without reboring cylinders, the glazed cylinder walls should be slightly dulled but without increasing the diameter of the bore. This is done with a "Glazebuster" or a hone equipped with the finest grade of stones.

New rings must be checked for clearance in piston grooves and for gap in cylinder bores. The latter operation must be measured with the ring about two inches from the bottom of the cylinder bore to which it is to be fitted. Cylinder bores and piston grooves must be clean, dry and free from carbon and burrs.

Check the clearance of each ring in its piston groove by installing the ring and then inserting feeler gauges *under* the ring. Any wear that occurs in the piston groove forms a step or ridge at the inner portion of the lower land. If gauges are inserted above the ring, the ring may rest on the step instead of on the worn portion of the lower land and a false measurement of clearance will result.

If the piston grooves have worn to the extent that relatively high steps or ridges exist on the lower lands, the piston should be replaced because the

steps will interfere with the operation of the new rings and ring clearances will be excessive. Piston rings are not furnished in oversize widths to compensate for ring groove wear.

PISTON PINS, REPLACE

All Engines

Pins should be selected that can be installed by pushing with the palm of the hand with the piston at normal room temperature. To make assembly easier, however, heat the piston in boiling water for a few minutes to obtain maximum expansion of the metal and quickly insert the pin.

ROD BEARINGS, REPLACE

All Engines

Rod bearings consist of two half shells. When the bearings are placed in the rod and cap the ends extend slightly beyond the parting faces so that when the rod bolts are tightened, the bearings will be clamped tightly in place to insure positive seating and prevent turning. *The ends of these bearings should never be filed flush with the parting surface of the rod and cap for the above reasons.*

Service bearings are provided in standard sizes and several undersizes, including undersizes for reground crankshafts.

After installing new bearings, the oil clearance may be checked with Plastigage which is readily available at any auto parts jobber. Full instructions for its use are furnished with the envelope in which it is contained.

MAIN BEARINGS, REPLACE

All Engines

Main bearings are of the insert type, requiring no reaming or scraping. They may be removed and replaced without removing the crankshaft.

Plastigage may be used to check bearing clearance and instructions for its use are contained in the package.

CRANKSHAFT END PLAY, ADJUST

Continental Engines

Crankshaft end thrust is controlled by flanges on the front main bearing. Whenever end play becomes noticeably excessive, it should be immediately adjusted, otherwise damage to the front main bearing will result.

End play of the crankshaft is regulated by a removable collar just to the rear of the crankshaft timing gear. There is a shim pack between this thrust collar and the front main bearing. Excessive clearance may be reduced by removing the right number of shims. Take the timing gear off the crankshaft and remove enough shims to reduce the end play to the recommended limits of .005″ to .008″.

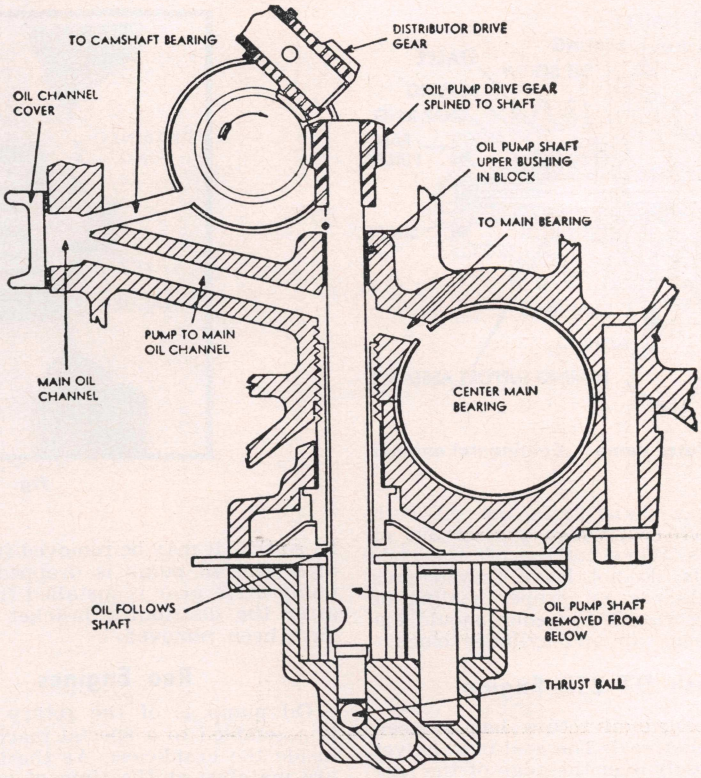

Fig. 19 Oil pump mounting. Nash DT-252 engine

Hercules, Nash & XL Engines

Crankshaft end thrust is controlled by flanges on the rear main bearing on Hercules and XL engines, and on the center main bearing on Nash engines. Whenever new bearings are fitted, check the end play carefully by forcing the crankshaft to the limit of its end play and measure the clearance with a feeler gauge between the bearing flange and the crankshaft cheek. If end play is excessive, install a new flanged bearing.

On Nash engines, end play limits are .003-.007″. On Hercules engines, end play should not exceed .005″, and on XL engines, end play limits are .004-.012″.

Reo 6 Cyl. Engines

End thrust is taken by two thrust plates at the front main bearing and is adjusted by shims located at the rear of the crankshaft timing gear.

Reo V8 Engines

Crankshaft end thrust is controlled by flanges on the rear main bearing and should be held to .004-.008″ end play.

CRANKSHAFT OIL SEAL, REPLACE

Reo V8 Engines

Oil sealing at the rear main bearing is controlled by a wick-type seal in the same manner as for Continental engines above.

Reo 6 Cyl. Engines

On these engines, the rear crankshaft oil seal is of neoprene material and spring loaded, assembled in a one-piece steel stamping. It is only furnished and replaced as an assembly.

The seal contacts around the rear crankshaft hub and is positioned by two dowels in the crankcase. The upper half is secured to the crankcase by four capscrews and the lower half by five socket type capscrews to the rear arch type oil pan support. These five capscrews are screwed through the oil seal housing from the inside of the arch while the four upper capscrews are screwed through the oil seal housing from the flywheel side.

To replace the oil seal, the flywheel and oil pan must be removed.

XL Engines

Crankshaft rear bearing oil seal consists of two pieces of special packing. One piece is installed in the groove in the rear bearing cap and the other piece is installed in a similar groove in the cylinder block.

Position the rear bearing seal in the groove in the cylinder block. Lay an improvised mandrel in the bearing bore and strike the mandrel with a hammer to drive the seal into the groove. Install the seal in the bearing cap in a similar man-

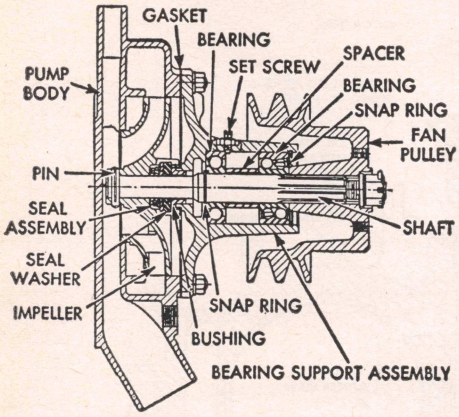

Fig. 20 Water pump. Continental engines

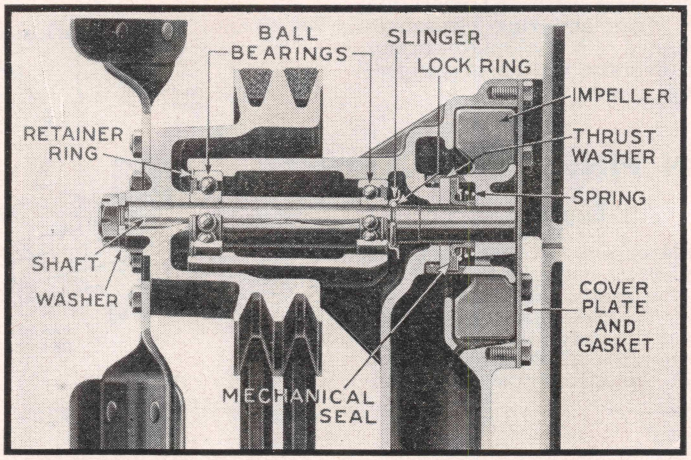

Fig. 21 Water pump. XL engines

ner. Using a sharp knife, cut off both ends of each seal which project out of the grooves. When cutting off the ends of the seals, do not leave frayed ends which would prevent proper seating of the bearing cap if the ends should extend between cap and cylinder block.

Nash DT-252 Engine

The threaded oil return has a steel-backed rubber seal. The seal is in halves and fits closely over the edge of the rear bearing oil return groove. It bears firmly on the smooth area of the crankshaft.

OIL PUMP REPAIRS

All Engines (Except Reo)

Conventional gear type oil pumps, located in the crankcase, are used on all engines. After removing the oil pan, the pump may be unfastened from its mounting and disassembled for repairs.

Inspect the pump gears for nicks or burrs. Inspect the bottom cover for wear and dress it down on a surface plate with emery if necessary. Place the cover on the pump and check the drive shaft end play. If end play is in excess of .006", replace the drive and idler gears.

Service Note, XL Engines

Whenever the oil pump is removed from these engines, the distributor will have to be taken off as well in order to reinstall the pump without damage. The reason for this is that the slot in the end of the oil pump drive shaft must match the tang on the end of the distributor drive shaft. If an attempt is made to install the oil pump with the distributor in place, it will be difficult or impossible to align the slot and tang with the result that the pump will be damaged when its mounting bolts are tightened.

Be sure to retime the ignition when the oil pump and distributor have been reinstalled.

Service Note, Nash Engines

On these engines, the oil pump drive gear which meshes with the camshaft gear is splined to the top end of the oil pump shaft, Fig. 19. The spline is a free fit so that it may be removed from below after the oil pump is dropped. The oil pump drive gear is installed from above after the distributor bracket and gear have been removed.

Reo Engines

Oil pump is of the rotary type and is assembled to a special machined boss inside the crankcase. As the two rotors are matched at the time of assembly a complete new unit must be installed as rotor repairs are never satisfactory.

Oil pump drive gear is driven from the gear on the camshaft. The gear is pinned to the pump shaft and is replaceable.

WATER PUMP REPAIRS

Continental, Reo & XL Engines

The water pumps used on these engines are of the ball bearing type with sealing accomplished by a non-adjustable spring-loaded seal, Figs. 20 and 21. In servicing these pumps, note carefully the arrangement of the seal parts as they are removed so that the new seal may be assembled correctly.

After disassembly, inspect the face of the pump body against which the sealing washer turns. Reface this surface if it is scored. Discard the pump impeller if it is corroded or loose on the shaft.

Nash DT-252 Engine

A "packless" sealed type water pump is used on these engines. The seal is of "cartridge" construction, installed and serviced as a unit. The sealing member is enclosed in a metal cartridge which is mounted and sealed in the pump body by means of a flexible rubber ring. The sealing member is pressed against the shaft by constant spring pressure exerted through the bushings. The spring chamber also acts as a reservoir for lubricant. A view of this pump can be seen in the Nash engine illustration.

Hercules Engines

The water pumps used are of the packless type, engine driven through a gear or belt drive. Water sealing is accomplished with a spring-loaded seal which is not adjustable but must be replaced in the event of a leak.

IGNITION TIMING

If a timing light is to be used to set ignition timing, disconnect the vacuum advance pipe to the carburetor and place a piece of tape over open end of pipe. *This is important as carburetor trouble can affect timing adjustments.*

Lacking a power timing light, an accurate method of setting ignition timing with the engine stopped is with the aid of a jumper light. Be sure to use a light bulb that corresponds with the system voltage of the vehicle.

1. Remove distributor cap and rotor and see that the breaker gap is set

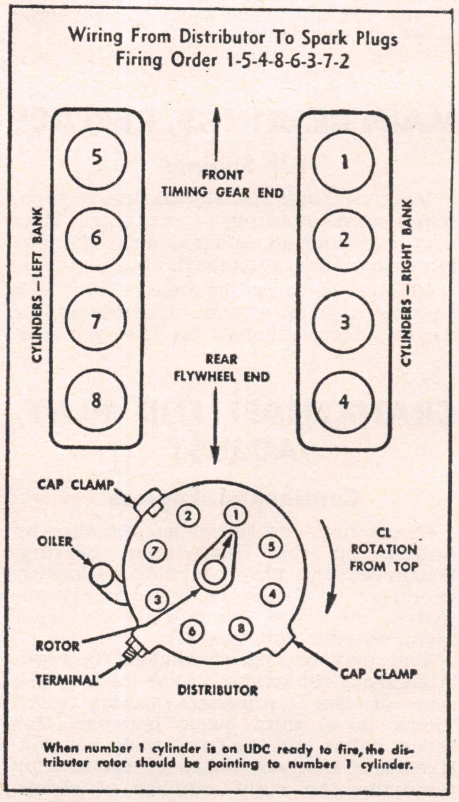

Fig. 22 Ignition details. Reo V8 engines

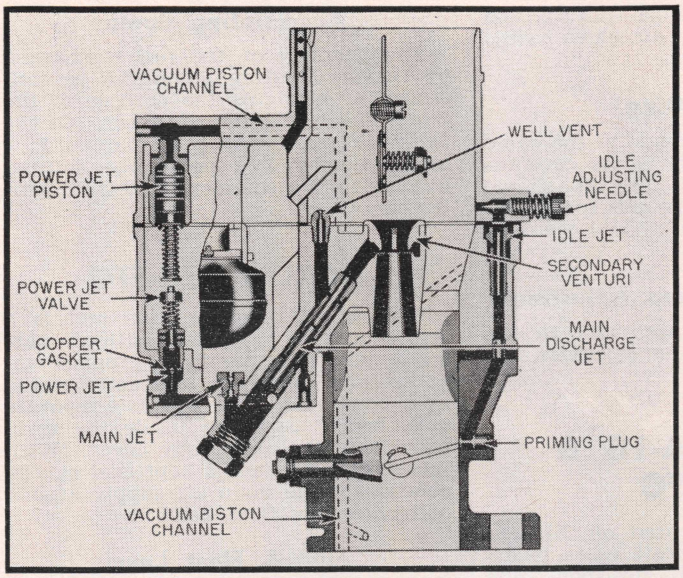

Fig. 23 Zenith Series 28 carburetor. Used on Continental Series K and T-6427 engines as well as Hercules TDXB

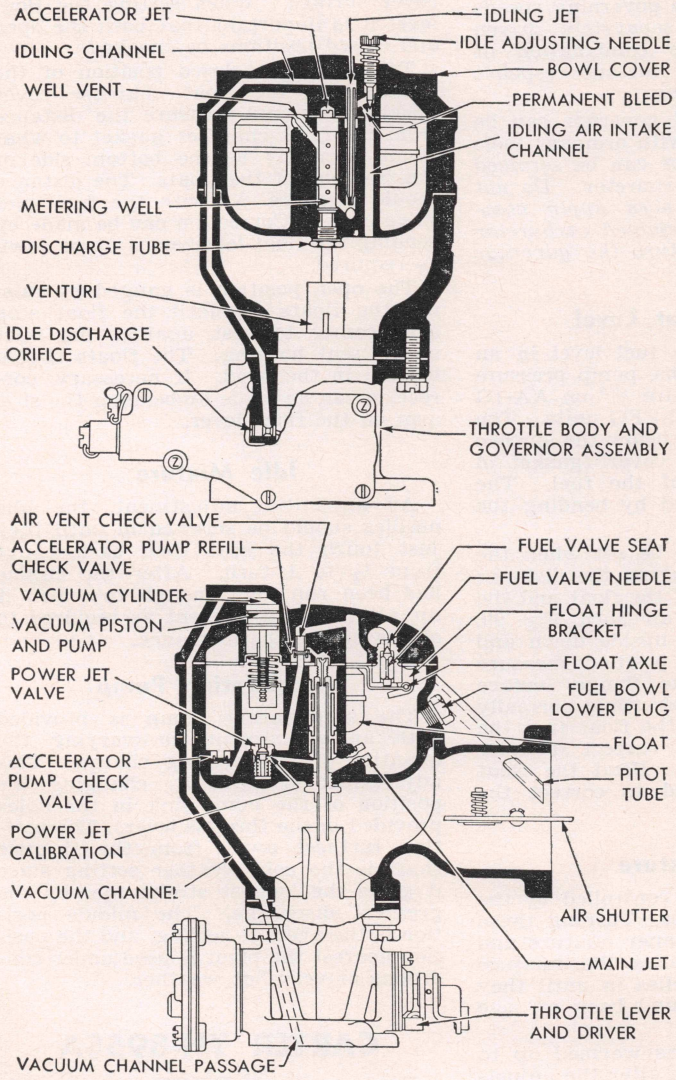

Fig. 25 Zenith 29 Series carburetor. Used on Continental R-6572 engine

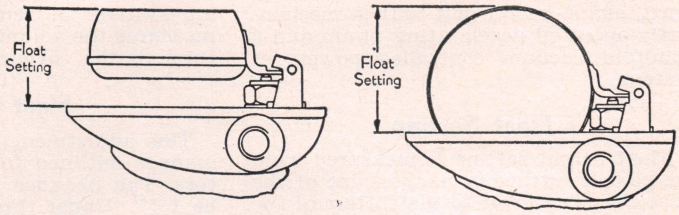

Fig. 24 Float setting. Zenith 28 and 63 Series carburetors

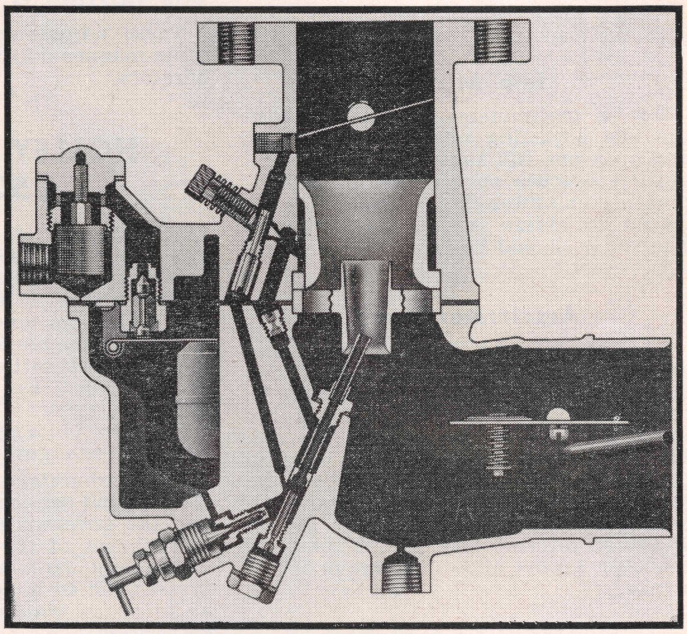

Fig. 27 Zenith 63 Series carburetor

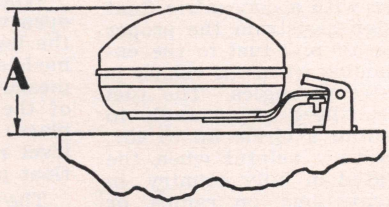

Fig. 26 Float setting. Zenith 29 Series carburetor

according to specifications.

2. Rotate engine until No. 1 cylinder is at the ignition timing point as indicated by the timing pointer and timing mark being lined up with each other.
3. Connect the jumper light between distributor ignition terminal and ground.
4. Turn on ignition switch.
5. Loosen distributor and turn it in the direction of normal rotation until the points just close (light out). Then slowly turn distributor in the opposite direction just to the exact point that the light goes on. Tighten distributor in this position.

CARBURETOR, ADJUST ZENITH 28ADA-10

This carburetor, Fig. 23, is a down-

draft, single-barrel unit with a mechanically-operated accelerating pump and a manifold vacuum controlled power jet system.

Float Setting

Float height setting is measured from the gasket surface or parting line of the float chamber cover to the bottom of the float at the center, Fig. 24, with the fuel inlet valve seated (holding float chamber cover upside down). This distance should measure 1½".

Under three pounds fuel pump pressure the fuel level should measure $\frac{25}{32}$".

Idle Mixture

For a preliminary adjustment, turn the idle adjusting needle into its seat and open one full turn. Run the engine until it reaches normal operating temperature and alter the adjustment as required to obtain smooth performance. The range should be between 1 and 1½ turns open.

Accelerator Pump

The accelerating jet and the pump spring control the rate of acceleration discharge. The stroke of the pump is controlled by the position of the pump rod in relation to the pump piston rod. The stroke can be varied by changing the position of the hairpin clip on the pump piston rod. The upper groove allows a half stroke. The center groove allows an intermediate or ¾ stroke and the lower groove allows maximum or full stroke.

ZENITH 29D-13

This carburetor, Fig. 25, is a downdraft carburetor with a concentric float bowl. This design assists in the proper metering of the air and fuel to the engine without flooding when the vehicle is operated at extreme angles. The fuel chamber can be tipped at an angle to any position within a circle up to 45°. This feature is very helpful when the vehicle is operated in hilly country, in and out of excavations, on ramps, or when operated at side angles.

Float Setting

With the cover and float assembly held upside down and fuel inlet needle held closed, the distance indicated at "A" in Fig. 26 should be $1\frac{41}{64}$".

Idle Mixture

For a preliminary adjustment, turn the needle into its seat and open one full turn. Run the engine until it reaches normal operating temperature and alter the adjustment as required to obtain smooth performance. The range should be 1 to 1½ turns open.

ZENITH 63 SERIES

Zenith 63AW-10 and 63AW-12 model carburetors are used on Hercules engines, Fig. 27. They are single-barrel, updraft carburetors with a manifold vacuum controlled power and accelerating system. A removable venturi tube measures the volume of air which passes through the carburetor.

Float Setting

This adjustment is made in the same manner outlined for 28 Series carburetors. The distance "A", Fig. 24, should be $1\frac{13}{32}$". Under three pounds fuel pump pressure the fuel level should measure $\frac{55}{64}$".

Idle Mixture & Pump Adjustment

These adjustments are made in the same manner outlined for 28 Series carburetors.

HOLLEY AA-1G & 852-FFG

These carburetors, used on XL engines, are dual downdraft units incorporating an integral governor. The governor throttle mechanism is part of the carburetor and has been designed to provide the needed power required for moving the throttle to governing speeds as controlled by a separately driven governor rotor. The combination of these two units give instant response and accurate governing.

The carburetor and governor can be cleaned and serviced with ordinary tools and the governor rotor can be serviced independent of the carburetor. *Do not under any circumstances apply compressed air to an assembled carburetor as to do so may rupture the governor diaphragm.*

Fuel & Float Level

When checking the fuel level in an open vessel, under 3 lbs. pump pressure the level should measure $\frac{19}{32}$" on AA-1G models and ⅝" on 852-FFG units. The measurement is taken below the surface of the float chamber cover (gasket in place) to the level of the fuel. The level may be corrected by bending the float arm, Fig. 28.

The float level can be set when the air horn is off by gauging the distance between the bottom of the float and the flange surface of the air horn, Fig. 29. Holding the air horn upside down and the float in the closed position, measure the distance from the flange surface of the air horn to what would normally be the bottom side of the float (not the soldered seam). The correct distance should measure 1¼". Bend the float lever arm as required to correct the float level.

Idle Mixture

The idle mixture is controlled by the idle adjustment needles. Turning these needles in makes a leaner mixture and turning them out makes the mixture richer. Turn the needles in until they just touch the seats and back off one full turn.

When the engine has warmed up to operating temperature, alter the adjustment as required to obtain smooth performance. The range should be between 1 and 1½ turns.

Accelerating Pump

The quantity of the fuel discharged by the accelerating pump can be controlled by changing the position of the pump link in the throttle lever. Of the three different positions (marked 1, 2 and 3) number 2 is the average setting, number 1 is for summer and 3 is for winter operation.

HOLLEY 885-FFG

Used on XL engines, this unit is a dual concentric carburetor with all metering jets and passages grouped together and located in the center of the float bowl. The float bowl is a separate unit, being suspended inside the main body from the main body cover. With this design the fuel is kept cool by circulation of the main air supply around and under the float bowl.

Fuel & Float Level

The fuel level can be accurately set by gauging the distance between the bottom of the floats and the chamber cover surface. When setting the float level it is important that both the open and closed positions be checked.

To gauge the closed position of the floats, hold the float chamber cover upside down and measure the distance from the float chamber gasket to what would normally be the bottom side of the free end of the floats. The distance should measure $\frac{5}{32}$" with the fuel inlet valve closed. Correction can be made by bending the float lever arms up or down as required.

The open position is gauged by raising the floats up until the float stop arm comes to rest against the inlet needle seat housing. The floats should bottom in the bowl. If necessary, correction can be made by bending the stop arm on the float lever.

Idle Mixture

As an initial adjustment, the idle needles should be screwed in until they just touch the seat then backed out from ½ to 1 turn. After the engine has been run long enough to warm it up, alter the adjustment as required to obtain smooth performance.

Accelerating Pump

The accelerating pump is provided with an adjustment for varying the quantity of accelerating charge. This adjustment is made by changing the position of the pump link in the holes provided in the throttle lever. The position furthest away from the throttle shaft is the cold weather setting since it gives the longest stroke thereby the greatest discharge. The middle position is the average setting, and the position nearest the pivot is used under conditions of very hot weather.

CARTER YH-895SA

Used on Nash DT-252 engine, this unit is of conventional Carter design with the circuits arranged in a hori-

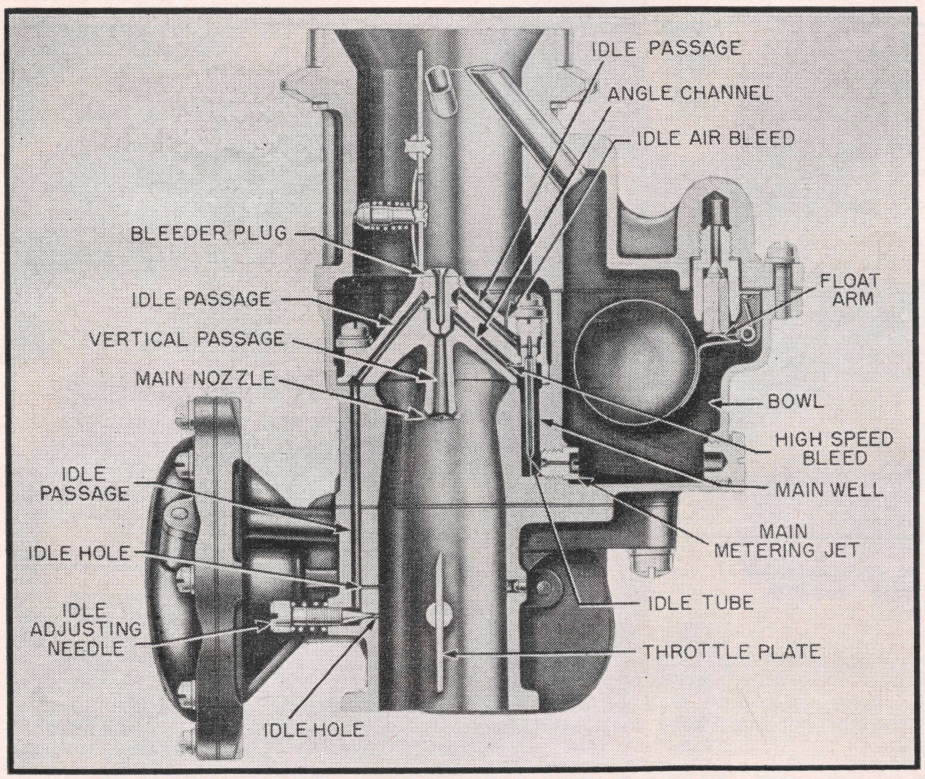

Fig. 28 Holley AA-1G carburetor. Typical of 852-FFG. Used on XL engines

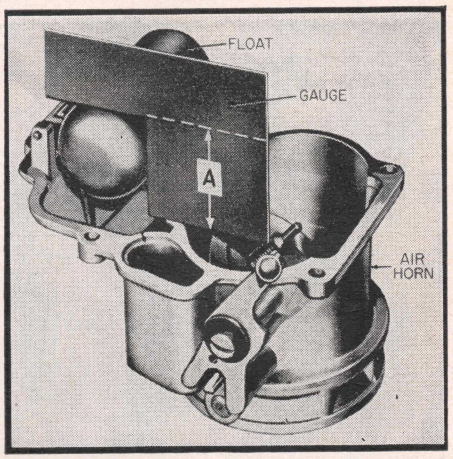

Fig. 29 Float setting. Holley AA-1G and 852-FFG carburetors

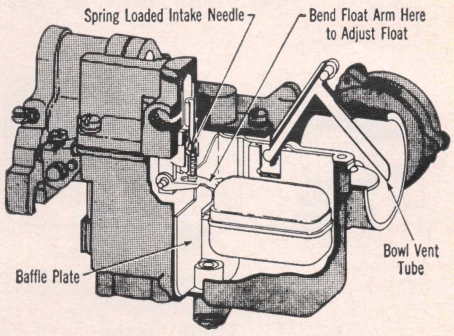

Fig. 31 Carter YH float circuit. Nash DT-252 engine

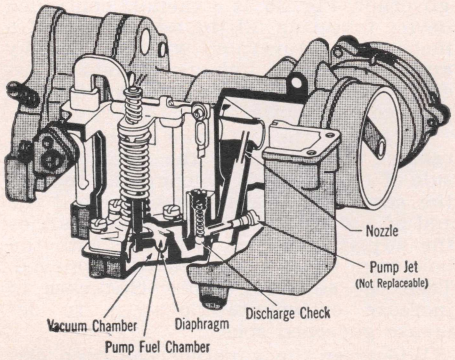

Fig. 33 Carter YH pump circuit. Nash DT-252 engine

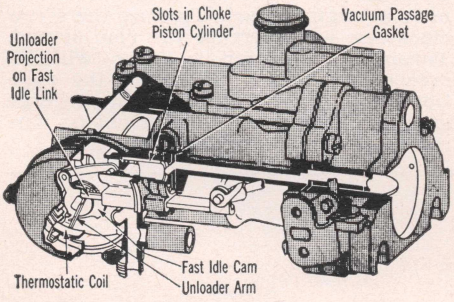

Fig. 34 Carter YH choke circuit. Nash DT-252 engine

zontal or side draft position. See Figs. 31 to 34 for details of construction.

Float Setting

With the gasket removed, bowl cover assembly inverted and float resting on seated needle, the distance from the bowl cover to the top of the float should be ⅜". Do not depress the float lip against the spring-loaded pin in the needle but let the float rest of its own weight. Adjust by bending the float lever arm, Fig. 31. Check the float setting with the bowl cover held at eye height in a level position.

Metering Rod Setting

This adjustment is important and must be checked each time the carburetor is reassembled or a lean metering rod is installed.

With throttle valve seated in bore of carburetor, press down on the upper end of the diaphragm shaft, Fig. 32, until the diaphragm bottoms in the bowl. The metering rod must contact the bottom of the metering rod well and the metering rod arm must contact the lifter link between springs and at the supporting lug. Adjust by bending the lip up or down.

Accelerating Pump

If acceleration is not satisfactory, remove the pump housing, intake rivet plug and ball check, Fig. 33. Then remove discharge ball check and spring. Examine the diaphragm for wear or damage. Be sure intake check and discharge check are not clogged with lint or foreign matter. The intake and dis-

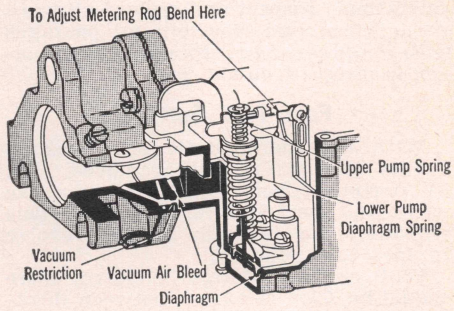

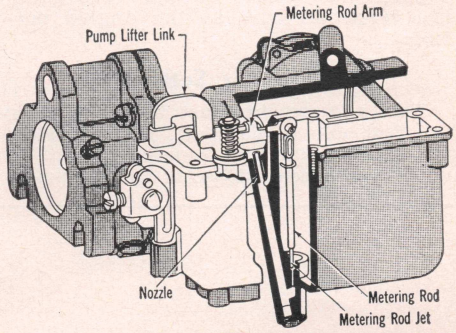

Fig. 32 Carter YH high speed circuit. Nash DT-252 engine (2 views)

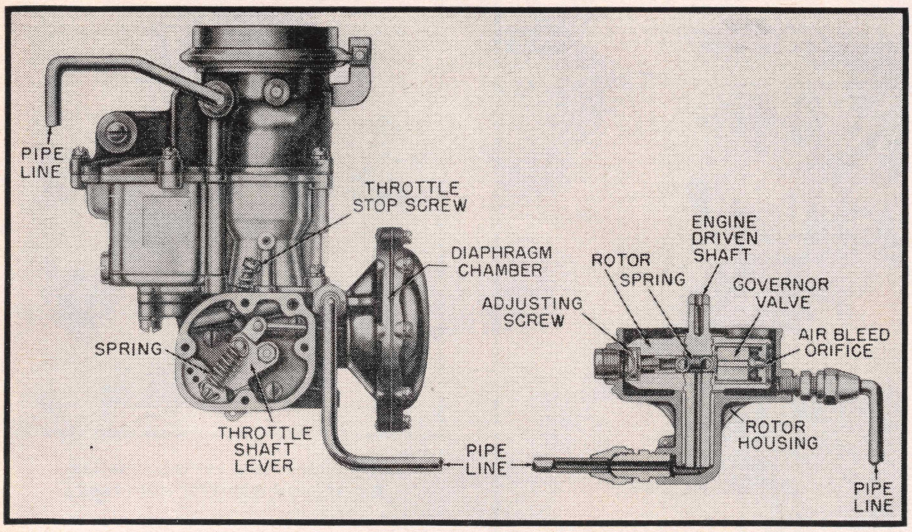

Fig. 36 Holley 1174 governor as applied to AA-1G carburetor. Also used on 852-FFG and 885-FFG carburetors

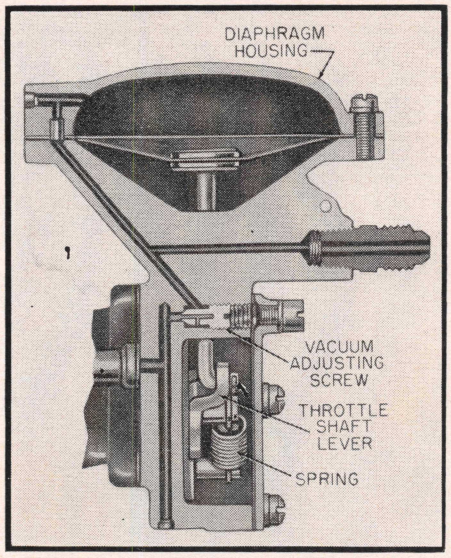

Fig. 37 Holley 1174 governor showing vacuum adjustment

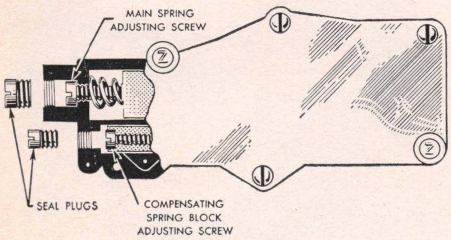

Fig. 35 Zenith carburetor governor adjustments

charge ball checks must seat, as a leak at these points will result in poor acceleration. Inspect and replace all worn parts, clean and blow out all passages with compressed air. *Pump jet is permanently installed, do not remove.*

Fast Idle Setting

With the thermostatic coil housing, gasket and baffle plate removed, Fig. 34, partially open throttle, close choke valve, and then close throttle valve. This will allow the fast idle cam to revolve to fast idle position.

With choke held tightly closed, there should be .030″ clearance between throttle valve and bore of carburetor (side opposite idle port). Adjust by bending the connector link at the angled portion.

Unloader Setting

This adjustment must be made after the fast idle adjustment, Fig. 34. Hold the throttle valve in wide open position and close choke valve as far as possible without forcing. There should now be ⅝″ clearance between lower edge of choke valve and wall of air horn. Adjust by bending choke shaft unloader arm.

Automatic Choke Setting

If the carburetor has a one-piece choke piston, set the choke cover one point lean. With a two-piece choke piston, set cover one point rich.

Idle Mixture

Turn the idle adjusting needle into its seat and back off 1 to 1½ turns. After the engine has warmed up, alter the adjustment as required to obtain smooth performance.

CARBURETOR GOVERNOR

Zenith

To change the governed speed, remove the seal wire and large seal plug, Fig. 35. Turn the main adjusting screw clockwise to increase or counter-clockwise to decrease governed speed. If the governor does not show definite response to changes of ¼ to one full turn of the adjusting screw, it indicates a defective governor.

If the governor "surges" or "hunts" to a higher or lower engine speed, remove the small seal plug and turn the compensating spring adjusting screw ¼ turn counter-clockwise until the surge is overcome.

If the governor does not respond quickly enough when governed speed is approached and the action "lags" or is "flat", turn the compensating adjusting screw clockwise until the symptom is overcome. Do not turn the adjustment more than ½ turn at a time without checking the performance of the vehicle on the road.

Holley Model 1174

Used with Holley carburetors, this governor, Fig. 36, is a vacuum controlled device featuring all the advantages of a mechanical governor without lengthy and complicated linkage. Should it become necessary to make any changes, proceed as follows:

To adjust the governor cut-off speed, remove the seal from the screw on the side of the governor housing and remove the screw. Rotate the engine until the end of the governor rotor, which carries the adjusting screw, is in line with the hole from which the screw was removed. Turn the adjusting screw clockwise to increase or counter-clockwise to decrease governed speed.

Whenever the governor has been disassembled and serviced, after reassembling turn the adjusting screw clockwise until it stops, then turn it counter-clockwise three full turns. Final adjustment is then made after the governor has been assembled to the engine.

The vacuum adjusting screw, Fig. 37, regulates the rpm spread between the governor full load cut-off speed and the no-load engine speed. Turning the screw clockwise will decrease the rpm spread. Turning it counter-clockwise will increase the spread. Changing the position of the screw will change the average governor speed and this should be corrected by the rotor adjusting screw.

Clutch, Transmission & Rear Axle

For Allison, Clark, Fuller, New Process, Spicer and Warner transmissions used on Diamond T trucks, see the "name" chapters for service procedures and lubricant capacities

For Eaton and Timken (Rockwell) driving axles used on Diamond T trucks, see the "name" chapters for service procedures and lubricant capacities

CLUTCHES

Make ①	Model ①
Borg & Beck	10A-7
Borg & Beck	11A-7
Borg & Beck	12E
Lipe-Rollway	14ML
Rockford	14TT
Rockford	15TT
Spicer	2 Plate

① Clutches may be identified by the manufacturer's number stamped on a name plate, or on the clutch cover, or on the flywheel ring on Lipe units.

BORG & BECK

These clutches, Fig. 1, are single plate, dry disc types with no internal provision for adjustment for wear. However, each release lever is adjusted individually to the correct height, and no attempt should be made to adjust these levers unless the clutch is to be dismantled for overhaul. Overhauling the clutch should not be attempted unless a clutch rebuilder is available. Lacking this equipment it is recommended that the clutch cover and pressure plate assembly be exchanged for a rebuilt unit.

Clutch Pedal, Adjust

The general procedure for adjusting the clutch pedal is to shift the pedal down away from the toe board until the clearance or free movement is 1 to 1½". The pedal pad should come in contact with the toe board when the pedal is pressed down. If it does not move that far, making it necessary to spring the pedal to make the pad touch the toe board, shift the pedal down a little more.

Press the pedal down and note the distance the release bearing travels after it comes in contact with the release levers. To obtain a clean release the levers should be pushed toward the flywheel $\frac{7}{16}$". If it does not travel this distance shift the pedal up, bearing in mind that the pedal pad must touch the toe board as above.

Clutch Assembly, Replace

After removing the transmission, but before removing the clutch, mark with a punch, the flywheel, clutch cover and pressure plate so that these parts may be assembled in their same relative positions and in the same position on the flywheel if the same clutch is to be reinstalled. This is important because they are balanced as an assembly.

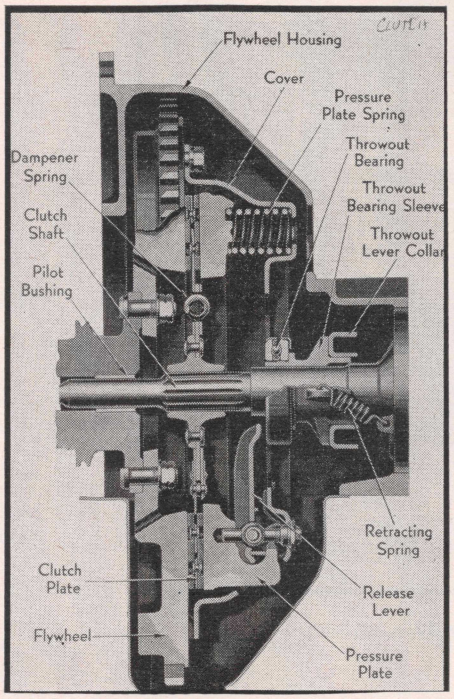

Fig. 1 Typical Borg & Beck clutch

To remove the clutch, pull out the clutch release bearing and sleeve. Unfasten the clutch cover from the flywheel, loosening each cap screw a few turns in succession until the cover is free. The clutch assembly and driven disc can then be removed from the flywheel.

When installing the clutch, coat the pilot bearing in the end of the crankshaft with wheel bearing grease. Clean the surfaces of the flywheel and pressure plate, making certain no oil or grease remains on these parts. Hold the cover plate and disc in place and insert a special clutch aligning tool or a spare clutch shaft through the hub of the disc and into the pilot bearing in the crankshaft. Bolt the clutch cover loosely to the flywheel, being sure the punch marks previously made are lined up. To avoid distortion of the clutch cover, tighten the cover bolts a few turns each in progression until all are tight. Guide the transmission into place, using care to see that the driven disc is not bent. Use a floor jack to support the transmission so that the clutch shaft may be guided through the driven disc safely. Adjust the clutch pedal free travel.

LIPE-ROLLWAY TYPE ML

This clutch, Fig. 2, is a single plate, dry disc type in which pressure on the driven disc is provided by a heavy spiral spring acting through 20 interlocked levers.

Clutch Adjustment

The original setting of the clutch provides for 1½" free movement of the clutch pedal. As the facings wear, the clutch sleeve moves toward the clutch release bearing, reducing the clearance and automatically cutting down on the free travel of the clutch pedal. When this travel drops to about ½", the clutch should be readjusted.

Do not adjust the clutch pedal linkage until the clutch has been adjusted to the correct Dimension "A", Fig. 3. The correct Dimension "A" for the clutches used are as follows:

Clutch	Dimension "A"	Shims Req. ①
13ML	$1\frac{1}{16}$"	.015"
14ML	$1\frac{5}{16}$"	.015"
15ML	$1\frac{3}{16}$"	.015"

① Removal of one shim .015" thick is equivalent to reducing Dimension "A" by $\frac{3}{32}$". The number of shims listed for each clutch should be placed under each strap when overhauling the clutch.

1. To adjust the clutch, block the clutch pedal in the depressed position. This is important, otherwise the straps and studs may become bent.
2. Back off adjusting nuts five full turns.
3. Remove pedal block. This will allow the adjusting plate to move out of contact with the adjusting shims.
4. Remove a sufficient number of shims to obtain Dimension "A". It is usually sufficient to remove only one shim from each stud, Fig. 4, then checking Dimension "A" before removing more. *Be sure no portion of the shim is torn and remains under the flange of the adjusting plate and that an equal number of shims remain under each strap.*
5. Reblock the clutch pedal. This moves the adjusting plate into contact with the adjusting shims. Then tighten each adjusting strap nut firmly.
6. Recheck Dimension "A".
7. After the correct Dimension "A" has been established, adjust the vehicle clutch release linkage so as to obtain proper release bearing clearance of ⅛" to $\frac{5}{32}$", as indicated in Fig. 5.

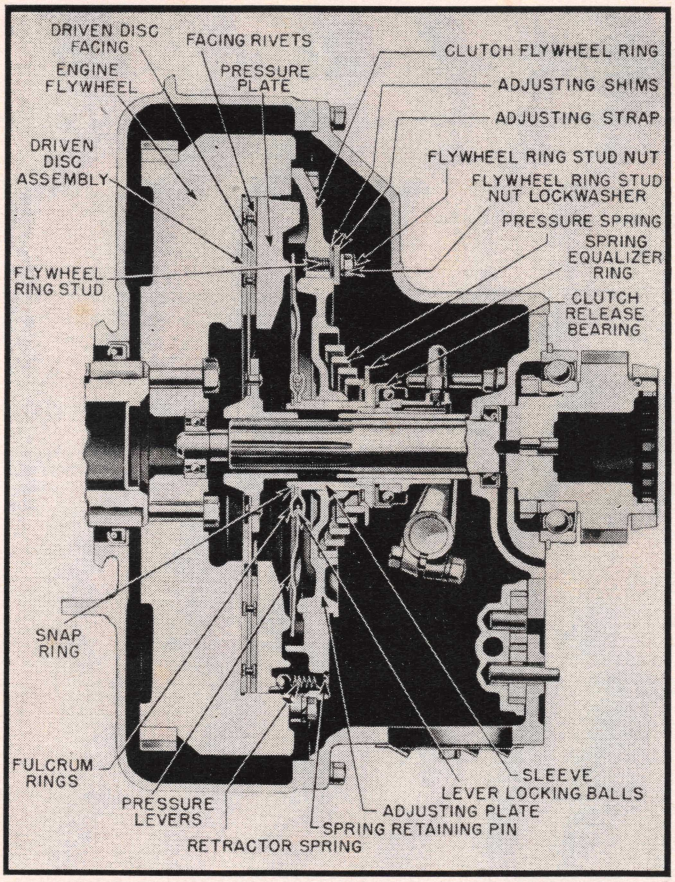

Fig. 2 Lipe-Rollway Type ML clutch

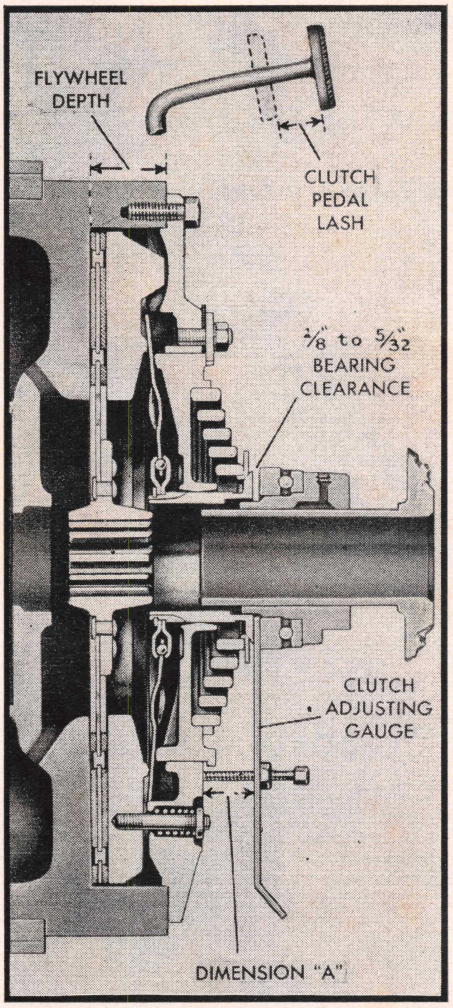

Fig. 3 Adjusting points. Lipe-Rollway ML clutch

Clutch Driven Disc, Replace

1. After removing transmission, unfasten clutch from flywheel and remove clutch and driven disc.
2. Remove flywheel ring stud nuts and adjusting straps one at a time and place the correct number of shims (see table above) under each strap.
3. Examine flywheel, making sure friction face is clean, smooth and dry.
4. Check release bearing and pilot bearing to make sure they are in good condition. Both these bearings are factory sealed and require no further lubrication.
5. Install a new driven disc and bolt the clutch to the flywheel, using a spare splined shaft to align the disc. When bolting the flywheel, screw in each bolt until it just contacts the cover plate, then gradually tighten alternate bolts until the clutch is drawn up evenly against the flywheel. Tighten remaining clutch-to-flywheel bolts.
6. After clutch is installed, check for proper release. Adjust clutch and pedal linkage as outlined above.

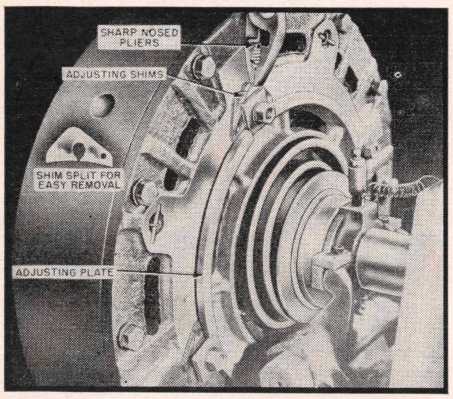

Fig. 4 Removing shims for clutch adjustment. Lipe-Rollway ML clutch

Pressure Plate, Replace

A pressure plate dished in excess of .015″ or badly scored should be replaced with a new part. After removing the transmission and clutch from the flywheel, proceed as follows:

1. Place clutch on arbor press with pressure plate down and compress spring as far as possible.
2. Remove four retractor springs after first removing pins.
3. Slowly release arbor press, allowing clutch spring to return to normal position.
4. Holding clutch assembly together by hand, turn it over and carefully lift off pressure plate.
5. Install new pressure plate, turn clutch assembly over and compress in arbor press.
6. See that retractor springs are in place and install pins.
7. Remove clutch from press and reinstall on flywheel.

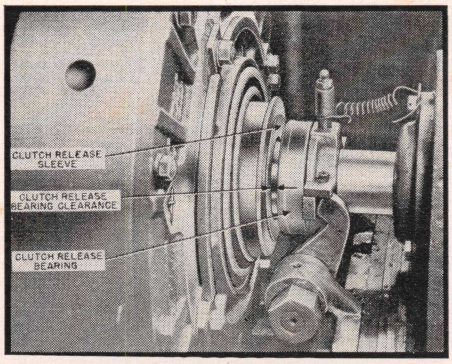

Fig. 5 Clearance between release bearing and release sleeve should be 1/8″ to 5/32″. Lipe-Rollway ML clutch

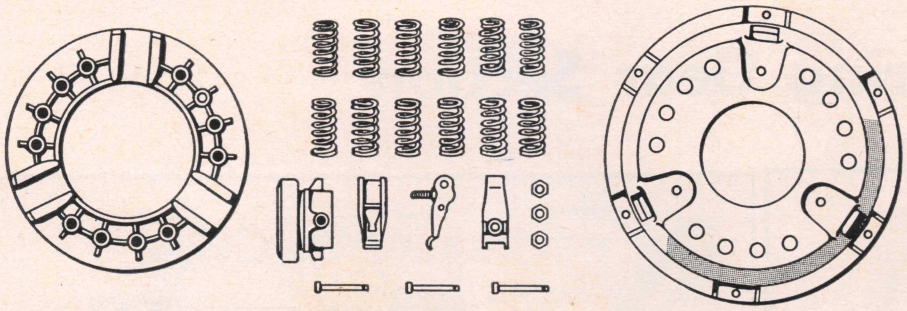

Fig. 6 Rockford Type TT clutch

ROCKFORD TYPE TT

This clutch, Fig. 6, is of the single plate dry disc type, consisting of a pressure plate and cover assembly having 12 release springs, three release levers and a spring-cushioned driven disc mounted on splined hub. There is no internal provision for adjusting the clutch but each release lever is adjusted individually to the correct height. No attempt should be made to adjust these levers unless the clutch is to be dismantled for overhaul. Overhauling the clutch should not be attempted unless a clutch rebuilder is available. Lacking this equipment it is recommended that the clutch cover and pressure plate assembly be exchanged for a rebuilt unit.

Clutch Assembly, Replace

Before removing the clutch from the flywheel, punch mark the flywheel, clutch cover and pressure plate so that these parts may be assembled in their same relative positions and in the same position on the flywheel if the same clutch is to be reinstalled. This is important because they are balanced as an assembly.

After removing the transmission, pull out the clutch release bearing and sleeve. Unfasten the clutch cover from the flywheel, loosening each cap screw a few turns in succession until the cover is free. The clutch and driven disc can then be removed from the flywheel.

When installing the clutch, coat the pilot bearing in the end of the crankshaft with wheel bearing grease. Clean the surfaces of the flywheel and pressure plate, making certain no oil or grease remains on these parts. Hold the cover plate and disc in place and insert a special clutch aligning tool or a spare clutch shaft through the hub of the disc and into the pilot bearing in the crankshaft. Bolt the clutch cover loosely to the flywheel, being sure the punch marks previously made are lined up. To avoid distortion of the clutch cover, tighten the cover bolts a few turns in progression until all are tight. Guide the transmission into place, using care to see that the driven disc is not bent. Use a floor jack to support the transmission so that the clutch shaft may be guided through the driven disc safely.

SPICER 2 PLATE UNIT

This clutch, Fig. 7, is a two-plate dry disc type with the two driven plates mounted on the splined clutch shaft. The driving disc, which separates these two plates, is mounted within the flywheel on four pins. As an aid to gear shifting a clutch brake is provided, which comes into action when the clutch pedal is fully released.

Clutch Adjustment

1. Remove the clutch housing cover and check the clearance between the clutch trunnion and the forward side of the clutch brake. If "clearance", Fig. 7, is less than ⅜" or more than ½", adjust as follows:
2. Remove the cap screw and lock on the flywheel ring. Block the clutch pedal in the depressed position and, using a hammer and drift, turn the clutch ring in a clockwise direction to decrease distance between trunnion and brake. Turning adjusting ring counter-clockwise increases clearance.
3. Engage the clutch and recheck clearance, which should be approximately $\frac{7}{16}$".
4. Adjust clutch pedal linkage so that clutch pedal has 1¼ to 1½" free travel at the pedal pad.
5. Idle the engine and check to determine whether or not full release of clutch is obtained before the clutch brake comes into action. Gears should shift freely with no noticeable drag of clutch plates when clutch is held in this position.
6. If clutch does not release before clutch brake comes into action, it will be necessary to readjust clutch as outlined in Step 2.

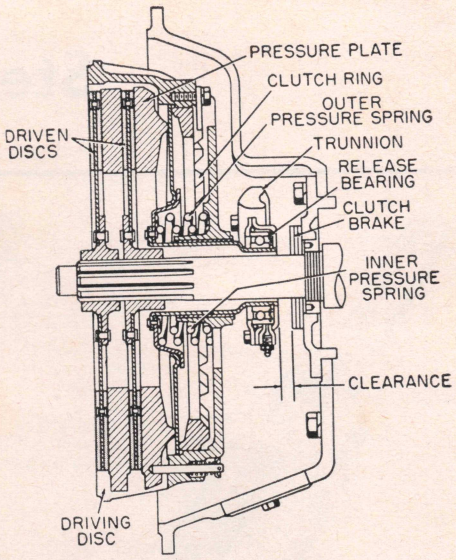

Fig. 7 Spicer two-plate clutch

7. As a final check, when clutch pedal is fully depressed, it should have a minimum clearance of ½" above the toeboard. Readjust pedal linkage if necessary.

Driven Discs, Replace

1. After removing the transmission, insert two ¾" wooden blocks between the clutch release bearing and the clutch cover plate.
2. Remove cap screw and lock and release the adjusting ring by turning it counter-clockwise.
3. Remove screws attaching spring plate and hub assembly to flywheel.
4. Remove clutch cover plate, pressure plate, driving disc and driven discs from flywheel.
5. Renew clutch plates that are heat checked, cracked, warped or scored. If the clutch lining is scored, oil soaked or worn down to the rivets, it should be replaced or new driven disc assemblies installed.
6. Check clutch pilot bearing and replace if worn. This bearing should be packed with ball bearing grease.
7. Using a spare splined clutch shaft, assemble clutch driven plate, driven discs and cover plate. Driven discs must be assembled with offset hubs as shown in Fig. 7.
8. Bolt clutch to flywheel with dummy shaft in position and the two wooden blocks between release bearing and clutch cover plate.
9. After removal of temporary blocks and dummy shaft, install transmission.
10. Adjust clutch and pedal linkage.

Steering Gear Section

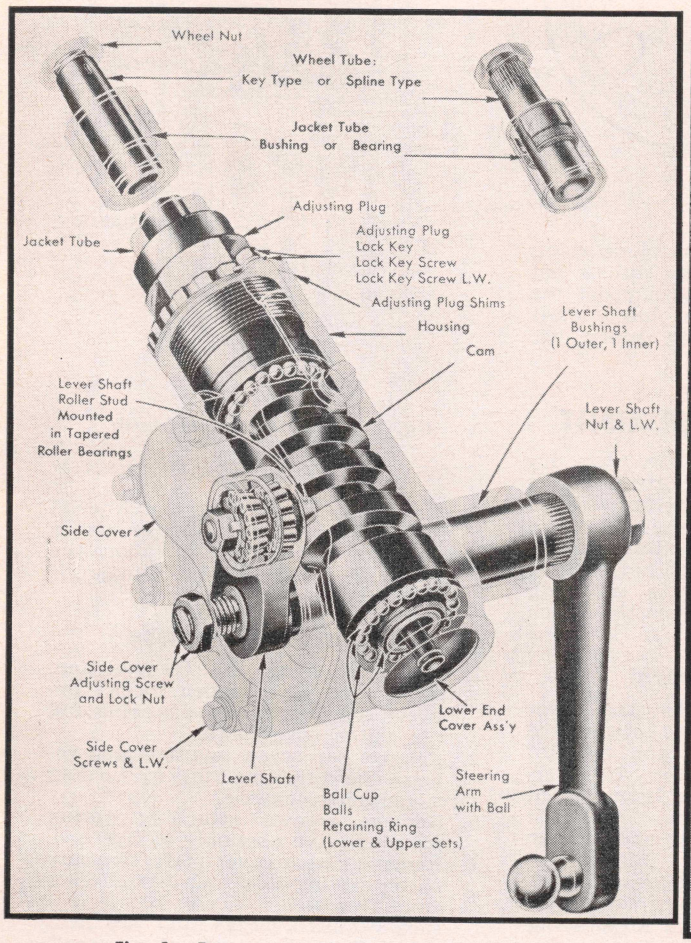

Fig. 1 Ross cam and single lever steering gear with roller stud mounting

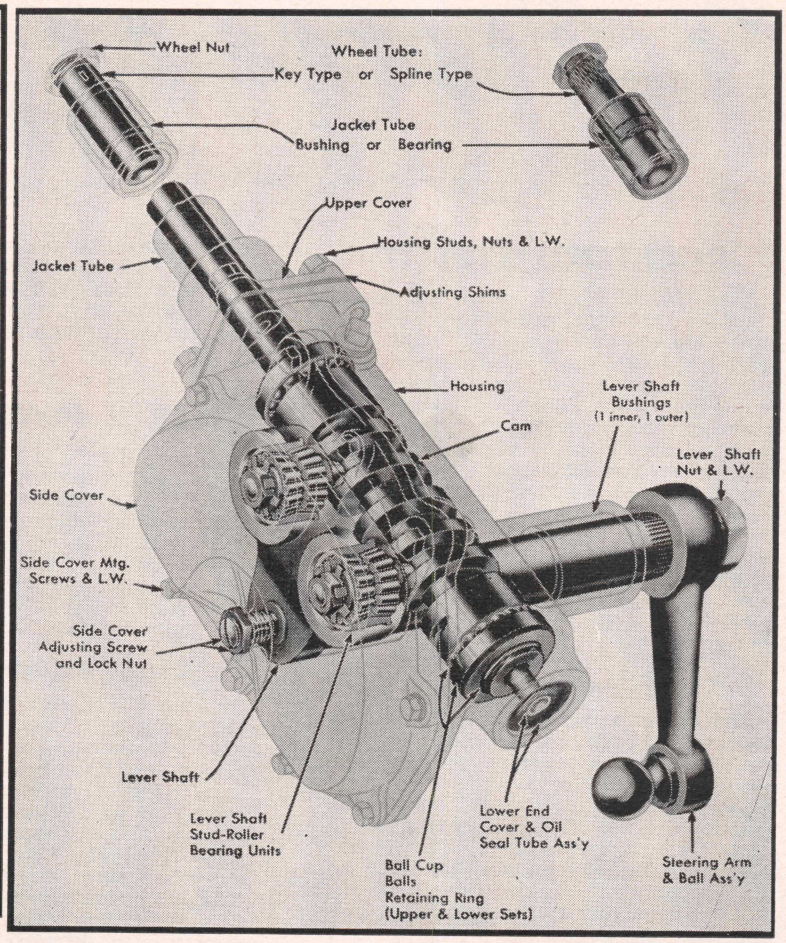

Fig. 2 Ross cam and twin lever steering gear with roller stud mounting

ROSS CAM & LEVER

These steering gears, Figs. 1 and 2, are of the cam and lever type in which the cam is mounted on ball bearings and the lever shaft turns on steel backed bronze bushings.

As the cam is turned by the wheel tube, the follower stud or studs are pulled along the cam groove causing the lever arm to rotate the lever shaft. As an aid to easy steering the lever shaft stud or studs which engage the cam are mounted on tapered roller bearings. The groove in the cam is cut shallower in the straight-ahead driving position to provide closer adjustment between the studs and cam where most of the steering action occurs.

Cam End Play, Adjust

Free the steering gear of all load by disconnecting the drag link and loosening the steering column braces. Then adjust as follows:

Twin Stud Gears—Loosen the lock nut and adjusting screw in the side cover to free the studs in the cam groove. Remove the upper cover stud nuts and raise the housing upper cover to permit removal of adjusting shims, which are .002", .003" and .010" thickness. Clip and remove one thin shim, tighten down the cover and check the adjustment. There should be a slight drag but the steering wheel should turn freely with the thumb and forefinger lightly gripping the rim. If necessary, remove or replace shims until the adjustment is correct.

Single Stud Gears—Loosen the housing side cover adjusting screw to free the stud in the cam groove. Turn down the cam adjusting plug, located at the top of the gear housing, until there is a barely perceptible drag so that the steering wheel can be turned freely with the thumb and forefinger lightly gripping the rim.

Lever Shaft Backlash, Adjust

1. Centralize the steering gear by turning the wheel all the way to the right. Then starting from this point count the number of turns required to reach the end of travel to the left. Turn the wheel back half this number of turns to the mid-position.
2. Tighten the side cover adjusting screw until a very slight drag is felt through the mid-position when turning the steering wheel slowly from one side to the other. The gear should not bind in any position but a slight drag should be felt in the mid-position only.
3. After proper adjustment is secured, tighten the lock nut and give the gear a final check for binding.

Stud Roller Bearing, Adjust

In most cases the foregoing adjustments will be adequate but it is some-

times necessary to adjust the stud roller bearing units as they should be preloaded at all times. A heavy drag should be felt when revolving the studs by hand. If a torque wrench is available the bearings should be adjusted so that the torque required to revolve the stud is as follows:

Lever Shaft Dia.	Torque, In. Lb.
1⅜"	3 to 4
1½"	3 to 4
1⅝"	4 to 8
1¾"	5 to 11

1. To adjust, remove lever shaft from housing, wash the bearings in solvent and blow dry with compressed air, using care not to spin the bearings. Lubricate the bearings with light oil.
2. Straighten out the prong of the locking washer to release the stud nut. Remove the nut and install a new locking washer.
3. While holding the stud nut from turning with a spanner wrench on the locking washer, tighten the nut as required to revolve the stud in accordance with the table above.
4. When proper adjustment has been secured, bend the prong of the washer against a side of the nut to keep it from turning.
5. Lubricate the bearings with gear oil and assemble the lever shaft in the steering gear housing.

DIVCO

INDEX OF SERVICE OPERATIONS

PAGE NO.

AXLES, DRIVING
Eaton Axle Service 176
Locking Differentials 169
Timken Axle Service 209

BRAKES
Adjustments 252
Air Brake System 259
Hydraulic Brake System 250
Vacuum Brake Boosters 268

CLUTCH 519

COOLING SYSTEM
Cooling System Capacity 508
Water Pump Repairs 517

ELECTRIC SYSTEM
Alternators & Regulators 37
Dash Gauge Service 93
Distributor Specifications 510
Distributor Service 7
Generator Specifications 510
Generator & Regulator Service 27
Ignition, Transistorized 22
Ignition Timing 517
Starting Motor Specifications 510
Starting Motor Service 65
Starter Switch Service 85

PAGE NO.

ENGINE
Camshaft & Bearings, Replace 514
Crankshaft Bearing Specifications 509
Crankshaft Rear Oil Seal 515
Cylinder Head, Replace 512
Main Bearings, Replace 515
Piston Pins, Replace 515
Piston Rings, Replace 515
Piston & Ring Specifications 509
Pistons & Rods, Remove 514
Piston & Rod, Assemble 515
Pistons, Replace 515
Push Rods 513
Rocker Arm Service 512
Rod Bearings, Replace 515
Timing Chain or Gears, Replace 514
Valves, Grind 513
Valve Guides 513
Valve Lifters 513
Valves, Remove 512
Valve Rotators 512
Valve Seat Inserts 513
Valve Spring Installed Height 512
Valve Spring Testing 512
Valve Specifications 509

ENGINE OILING
Crankcase Capacity 508
Crankcase Ventilation 6
Oil Pump Repairs 516

PAGE NO.

FUEL SYSTEM
Carburetor Adjustments 517
Carburetor Governors 518
Crankcase Ventilation 6
Fuel Pump Service 104
L.P.G. Carburetion 109

SPECIFICATIONS
Carburetor Adjustment 518
Crankshaft & Bearing 509
Distributor 510
Engine Tightening Torque 511
Generator & Regulator 510
Piston, Pin & Ring 509
Starting Motor 510
Tune Up 509
Valve 509
Wheel Alignment 511

STEERING GEARS 520

TRANSFER CASES 242

TRANSMISSIONS
Clark 110
Divcomatic 300
Fuller 122
New Process 135
Spicer 141
Warner 164
Powermatic 281

TUNE UP SERVICE 2

ENGINE IDENTIFICATION Divco Engine applications may be identified as follows:

Hercules QXD-3, QXLD-3 and G-298-H is stamped on engine name plate.
Continental F4162 is a flat head four with distributor through cylinder head.
Continental G-4193 is an overhead valve four.
Continental FO-6226 is an overhead valve six with distributor on left side.
Nash 6-252 is an overhead valve six with generator-driven water pump.

Model	Year	Standard Engine Make	Standard Engine Model	Crankcase Refill Capacity, Qts.	Cooling System Capacity, Qts.
10-A	1961–63	Continental	F4162-S	3½	11
10-B	1961–63	Continental	F4162-S	3½	11
10-C	1961–63	Continental	F4162-S	3½	11
11	1961	Continental	F4162-S	3½	11
11	1952–61	Continental	F4162	3½	11
12	1961	Continental	F4162-S	3½	11
12	1952–61	Continental	F4162	3½	11
13	1961	Continental	F4162-S	3½	11
13	1952–61	Continental	F4162	3½	11
14	1952–53	Hercules	QXD3	5	12½
15	1961	Hercules	QXLD3	5	12½
15	1952–61	Hercules	QXD3	5	12½
15	1961	Hercules	QXLD3	5	12½
21	1952–55	Hercules	QXD3	5	12½
22	1952–55	Hercules	QXD3	5	12½
24	1953–55	Continental	F4162	3½	11
31	1952–53	Hercules	QXD3	5	12½
32	1952–53	Hercules	QXD3	5	12½
33	1952–55	Hercules	QXD3	5	12½
34	1952–55	Hercules	QXD3	5	12½
36	1953–55	Continental	F4162-S	3½	11
37	1954–55	Hercules	QXD3	5	12½
40-A	1961–63	Continental	G-4193	4	17
40-B	1961–63	Continental	FO-6226	5	17
40-C	1961–63	Continental	FO-6226	5	17
40-D	1961–63	Hercules	G-298-H	8	27
40-E	1961–63	Hercules	G-298-H	8	27
41	1957–60	①	252	6	17
41	1961	Hercules	G-298-H	8	27
42	1955–60	①	252	6	17
42	1961	Continental	FO-6226	5	17
43	1960	①	252	6	17
43	1961–63	Hercules	G-298-H	8	27
44	1959–60	①	252	6	17
44	1961–63	Continental	FO-6226	5	17
45	1959–60	①	252	6	17
45	1961–63	Continental	FO-6226	5	17
47	1961	Continental	FO-6226	5	17
50-A	1961–63	Continental	G-4193	4	17
50-B	1961–63	Continental	G-4193	4	17
50-C	1961–63	Continental	FO-6226	5	17
50-D	1961–63	Continental	FO-6226	5	17
50-E	1961–63	Hercules	G-298-H	8	27
50-F	1961–63	Hercules	G-298-H	8	27
51	1957–60	①	252	6	17
51	1961	Hercules	G-298-H	8	27
52	1956–60	①	252	6	17
52	1961	Continental	FO-6226	5	17
53	1960	①	252	6	17
53	1961–63	Hercules	G-298-H	8	27

①—Divco Super 6 (Nash 252).

Model	Year	Standard Engine Make	Standard Engine Model	Crankcase Refill Capacity, Qts.	Cooling System Capacity, Qts.
54	1959–60	①	252	6	17
54	1961–63	Continental	FO-6226	5	17
55	1959–60	①	252	6	17
55	1961–63	Continental	FO-6226	5	17
57	1959–60	①	252	6	17
57	1960–61	Continental	FO-6226	5	17
58	1960–61	Continental	G-4193	4	11
70-A	1961–63	Continental	FO-6226	5	17
70-B	1961–63	Continental	FO-6226	5	17
70-C	1961–63	Hercules	G-298-H	8	27
70-D	1961–63	Hercules	G-298-H	8	27
71	1959–60	①	252	6	17
71	1961	Hercules	G-298-H	8	27
72	1959–60	①	252	6	17
72	1961	Continental	FO-6226	5	17
73	1959–60	①	252	6	17
73	1961–63	Hercules	G-298-H	8	27
74	1959–60	①	252	6	17
74	1961–63	Continental	FO-6226	5	17
75	1959–60	①	252	6	17
75	1961–63	Hercules	G-298-H	8	27
76	1959–60	①	252	6	17
76	1961–63	Hercules	G-298-H	8	27
100-A	1961–63	Continental	F4162-S	3½	11
100-B	1961–63	Continental	F4162-S	3½	11
100-C	1961–63	Continental	F4162-S	3½	11
114	1956–61	Continental	F4162-S	3½	11
124	1956–61	Continental	F4162-S	3½	11
134	1956–61	Continental	F4162-S	3½	11
154	1956–61	Hercules	QXD3	5	12½
154	1961	Hercules	QXLD3	5	12½
200-A	1961–63	Hercules	QXLD-3	5	12½
200-B	1961–63	Hercules	QXLD-3	5	12½
200-C	1961–63	Hercules	G-298-H	8	17
214	1956–61	Hercules	QXD3	5	12½
214	1961	Hercules	QXLD3	5	12½
224	1956–61	Hercules	QXD3	5	12½
224	1961	Hercules	QXLD3	5	12½
244	1956	Continental	F4162-S	3½	11
300-A	1961–63	Continental	F4162-S	3½	11
300-B	1961–63	Continental	F4162-S	3½	11
300-C	1961–63	Hercules	QXLD-3	5	12½
300-D	1961–63	Hercules	QXLD-3	5	12½
300-E	1961–63	Hercules	QXLD-3	5	12½
334	1955–61	Hercules	QXD3	5	12½
334	1961	Hercules	QXLD3	5	12½
344	1955–61	Hercules	QXD3	5	12½
344	1961	Hercules	QXLD3	5	12½
364	1955–61	Continental	F4162-S	3½	11
374	1955–61	Hercules	QXD3	5	12½
374	1961	Hercules	QXLD3	5	12½

GENERAL ENGINE SPECIFICATIONS

Engine Make & Model	No. Cylinders Bore & Stroke	Piston Displ. Cu. In.	Comp. Ratio (Std.)	Brake H.P. @ R.P.M.	Torque Lbs. Ft. @ R.P.M.	Governed Speed No Load R.P.M.	Normal Oil Pressure P.S.I.
Continental.....F4162	4–3 7/8 x 4 3/8	162	6.00	45 @ 2640	122 @ 1600	2900	40
Continental.....F4162–S	4–3 7/16 x 4 3/8	162	6.25	55 @ 2900	122 @ 1600	2900	40
Continental..... G4193	4–3 3/4 x 4 3/8	193	7.01	80 @ 3500	172 @ 1600	3500	30
Continental..... FO–6226	6–3 5/16 x 4 3/8	226	8.06	107 @ 3500	212 @ 2000	3400	40
Hercules..... QXD3	6–3 7/16 x 4 1/8	230	6.56	65 @ 2700	167 @ 1500	3000	30
Hercules..... QXLD3	6–3 7/16 x 4 1/4	237	6.88	90 @ 3000	178 @ 1500	3000	30
Divco Super 6.....6–252	6–3 1/2 x 4 3/8	252	7.25	114 @ 3500	216 @ 1400	3500	40
Hercules.....G–298H	6–3 3/4 x 4 1/2	298	7.50	116 @ 3200	271 @ 1400	3200	45

TUNE UP & VALVE SPECIFICATIONS

Engine Model	Firing Order	Spark Plug		Ignition Timing		Valve Face Angle	Valve Lash		Valve Springs	
		Type ⑥	Gap	Mark	Location		Intake	Exhaust	Installed Height	Pressure @ Inch Length
F–4162	1342	D–16	.035	9°②	Flywheel	⑤	.018H	.018H	1 11/16	50 @ 1 11/16
F–4162S	1342	D–16	.035	9°	Flywheel	⑤	.018H	.018H	1 45/64	50 @ 1 45/64
G4–193	1342	H18Y	.035	10°	Flywheel	⑤	.014H	.014H	1 13/16	76 @ 1 13/16
FO–6226	153624	UN–12Y	.030	5°③	Damper	⑤	.017H	.023H	1 13/16	76 @ 1 13/16
QXD3	153624	J11	.025	"Spark"	Flywheel	30	.008H	.010H	1 9/32	41 @ 1 9/32
QXLD3	153624	J11	.025	4°	Flywheel	30	.008H	.010H	1 13/16	56 @ 1 13/16
Nash①	153624	J8	.030	4°④	Pulley	⑤	.012H	.016H	1 13/16	53 @ 1 13/16
G–298H	153624	J8	.030	TDC	Flywheel	45	.010H	.010H	1 1/2	76 @ 1 1/2

①—Divco Super 6.
②—Models 11, 12, 13: 10°B.T.C.
③—At idle speed with vacuum line disconnected.
④—After T.D.C. with engine idling.
⑤—Intake 30°, exhaust 45°.
⑥—Champion. For normal service.

PISTON, PIN, RING, CRANKSHAFT & BEARING SPECIFICATIONS

Engine Model	Fitting Pistons		Ring End Gap		Wrist-pin Diameter	Rod Bearings		Main Bearings			
	Shim To Use	Pounds Pull On Scale	Comp.	Oil		Shaft Diameter	Bearing Clearance	Shaft Diameter	Bearing Clearance	Thrust on Bear. No.	Shaft End Play
F–4162	.002	10	.005	.005	.859	2.0619–2.0627②	.0015–.002	2.3744–2.3752③	.0015–.002	Center	.005–.007
F–4162S	.002	10	.010	.010	.859	2.0619–2.0627	.0015–.002	2.3744–2.3752	.0015–.002	Center	.005–.007
G–4193	.002	10	.015	.015	1.109	2.249–2.250	.0015–.0035	2.3740–2.3750	.0007–.0025	Center	.004–.006
FO–6226	.0015	5	.015	.015	.859	2.0619–2.0627	.0007–.0025	2.3744–2.3752	.0008–.0028	Rear	.002–.006
QXD3	.0015	5	.007	.007	.875	1.987–1.988	.001–.0015	2.497–2.498	.002–.003	Center	.002–.004
QXLD3	.0015	5	.017	.017	1.000	1.987–1.988	.001–.0015	2.497–2.498	.002–.003	Center	.002–.004
6–252	①	①	.007	.007	.937	2.000–2.001	.001–.0015	2.4791–2.4798	.001–.0015	Front	.003–.007
G–298H	.002	10	.015	.015	1.125	2.4976–2.4986	.001–.003	2.8734–2.8744	.0015–.004	Center	.005–.010

①—Fit piston so it supports its own weight in any portion of cylinder with parts clean and dry.
②—Prior to 1953 production 1.9365–1.9375".
③—Prior to 1953 production 2.2490–2.2500".

DISTRIBUTOR SPECIFICATIONS

Unit Part No. ①	Rotation ②	Cam Angle, Degrees	Breaker Gap, In.	Condenser Capacity, Mfds.	Breaker Arm Spring Tension, Oz.	Centrifugal Advance Deg. @ R.P.M. of Dist.		Vacuum Advance		
						Advance Starts	Full Advance	Inches of Vacuum to Start Plunger Movement	Inches of Vacuum For Full Plunger Travel	Maximum Vacuum Advance, Dist. Degrees
1110192	CC	31–37	.022	.20–.25	17–21	1 @ 275	14 @ 1200	None	None	None
1110198	C	31–37	.022	.20–.25	17–21	1 @ 375	10 @ 1500	None	None	None
1110241	C	38–45	.016	.20–.25	17–21	1 @ 350	14 @ 1350	4–6	14–16	6
1110264	CC	35–37	.021	.18–.23	17–21	1 @ 250	16 @ 1200	7–9	16	5
1111713	CC	25–34	.022	.18–.23	17–21	1 @ 400	7 @ 1250	None	None	None
1111870	C	31–37	.022	.18–.23	17–21	1 @ 375	10 @ 1500	None	None	None
1111899	C	31–37	.022	.18–.23	17–21	1 @ 275	18 @ 1400	None	None	None
1111907	CC	25–34	.022	.18–.23	17–21	1.5 @ 250	13 @ 1400	None	None	None

①—Stamped on plate riveted to housing. ②—C—Clockwise. CC—Counter-clockwise; as viewed from top.

GENERATOR & REGULATOR SPECIFICATIONS

★To polarize generator, connect jumper wire from "hot" side of battery to armature terminal of generator.

Generator						Regulator					
							Cutout Relay				
Gen. No. ①	Rotation and Ground Polarity ③	Brush Spring Tension, Oz.	Rated Cap. Amps.	Gen. Field Ground Location★	Field Current	Reg. No. ②	Closing Voltage	Arm. Air Gap, In.	Voltage Setting	Current Setting	Current & Voltage Reg. Arm Air Gap, Inch
1102049	C-N	28	30	External	1.48–1.62	1118839	12.6	.020	14.2	30	.075
1102198	C-N	28	45	External	2.66–2.86	1119600	12.4	.020	14.5	45	⑤
1102819	C-P	28	30	External	1.87–2.0	1118303	6.4	.020	7.2	30	.075
1102822	C-P	28	45	External	1.87–2.0	1118828	6.3	.020	7.2	45	.075
1105009	C-P	28	40	External	2.0–2.15④	1118830	6.4	.020	7.2	40	.075
1105116	C-N	28	35	External	2.73–3.00	1119604	12.4	.020	14.5	35	⑤
1105123	C-N	28	40	External	2.73–30	1119610	12.4	.020	14.5	40	⑤
1105876	C-P	28	25	External	1.62–1.82④	1118350	6.4	.020	7.2	25	.075
1105876	C-P	28	25	External	1.62–1.82④	1118871	6.3	.020	7.2	25	.075

①—Stamped on plate riveted to housing.
②—Stamped on regulator base.
③—C—Clockwise. CC—Counter-clockwise. P—Positive. N—Negative.
④—At 6 volts. ⑤—Voltage .067″, Current .075″.

STARTING MOTOR SPECIFICATIONS

Unit Part No. ①	Rotation ②	Brush Spring Tension, Oz.	No Load Test			Torque Test		
			Amperes	Volts	R. P. M.	Amperes	Volts	Torque Lb. Ft.
1107010	C	24–28	65	5.67	5000	525	3.37	12
1107086	C	24–28	65	5.67	5000	525	3.37	12
1107090	C	24 Min.	80	5.67	5000	525	3.37	12
1107146	C	24 Min.	70	5.65	5500	550	3.25	11
1107149	C	24 Min.	70	5.65	5500	550	3.25	11
1107663	C	35 Min.	75	10.3	6900	435	5.8	10.5
1107743	C	35 Min.	112	10.6	3240	385③	3.5③	
1107761	C	35 Min.	75	10.3	6900	435	5.8	10.5
1107897	C	35 Min.	75	10.3	6900	435	5.8	10.5
1107959	C	24 Min.	70	5.0	3000	450	3.7	15
1108055	C	24 Min.	60	5.0	6000	600	3.0	15
1108081	C	24 Min.	60	5.0	6000	600	3.0	15
1108084	C	24 Min.	75	5.0	6500	550	3.0	10
1108184	C	35 Min.	91	10.6	3240	395③	3.5③	..

①—Stamped on plate riveted to housing. ②—As viewed from drive end. ③—Resistance test.

ENGINE TIGHTENING SPECIFICATIONS★

★Torque specifications are for clean and lightly lubricated threads only. Dry or dirty threads produce increased friction which prevents accurate measurement of tightness.

Engine	Spark Plugs Ft. Lbs	Cylinder Head Bolts Ft. Lbs.	Intake Manifold Ft. Lbs.	Exhaust Manifold Ft. Lbs.	Rocker Arm Shaft Bracket Ft. Lbs.	Rocker Arm Cover Ft. Lbs.	Connecting Rod Cap Bolts Ft. Lbs.	Main Bearing Cap Bolts Ft. Lbs.	Flywheel to Crankshaft Ft. Lbs.	Vibration Damper or Pulley Ft. Lbs.
F-4162	30	70	...	35	...	...	45-50	105	35-40	...
F-4162S	30	70	...	35	...	...	45-50	105	35-40	...
G4-193	30	①	35	35	...	...	75	100	40	...
FO-6226	30	70-75	35	35	...	...	40	110	40	115
QXD3	30	60	...	35	...	...	45	②	80	...
QXLD3	30	60	...	35	...	...	45	②	80	...
6-252	30	65	15-20	...	...	...	52-56	66-70	105	95
G-298H	30	125	...	30-35	...	...	135	100③	80	...

①—3/8″ bolt 40 ft. lbs., 1/2″ bolt 100 ft. lbs.
②—Front and intermediate 70 ft. lbs., center and rear 60 ft. lbs.
③—For center main bearing 90 ft. lbs.

WHEEL ALIGNMENT SPECIFICATIONS

Model	Year	Caster, Deg. ①	Camber, Deg.	Toe-In, Inch	Kingpin Inclination, Deg.
10 Series	1961-63	1 1/2	1	1/16	8
11	1956-61	1 1/2	1	1/16	8
12	1956-61	1 1/2	1	1/16	8
13	1956-61	1 1/2	1	1/16	8
14	1952-53	1 3/4	1	1/16-1/8	8
15	1956-61	1 1/2	1	1/16	8
21	1952-55	1 1/2	1	1/16	8
22	1952-55	1 1/4	1	1/16	8
24	1953-55	1 1/4	1	1/16	8
31	1952-53	1 1/4	1	1/16-1/8	8
32	1952-53	1 1/4	1	1/16-1/8	8
33	1952-55	1 1/4	1	1/16-1/8	8
34	1952-55	1 1/4	1	1/16-1/8	8
36	1953-55	1 1/4	1	1/16-1/8	8
37	1954-55	1 1/2	1	1/16	8
40 Series	1961-63	1 1/2	1	1/16	8
41	1956-61	1 1/2	1	1/16	8
42	1956-61	1 1/2	1	1/16	8
43	1956-63	1 1/2	1	1/16	8
44	1956-63	1 1/2	1	1/16	8
45	1956-63	1 1/2	1	1/16	8
47	1959-61	1 1/2	1	1/16	8
50 Series	1961-63	1 1/2	1	1/16	8
51	1957-61	1 1/2	1	1/16	8
52	1956-61	1 1/2	1	1/16	8

①—Truck empty.

Model	Year	Caster, Deg. ①	Camber, Deg.	Toe-In, Inch	Kingpin Inclination, Deg.
53	1957-63	1 1/2	1	1/16	8
54	1956-63	1 1/2	1	1/16	8
55	1956-63	1 1/2	1	1/16	8
57	1956-61	1 1/2	1	1/16	8
58	1956-61	1 1/2	1	1/16	8
70 Series	1961-63	1 1/2	1	1/16	8
71	1959-61	1 1/2	1	1/16	8
72	1959-61	1 1/2	1	1/16	8
73	1959-63	1 1/2	1	1/16	8
74	1959-63	1 1/2	1	1/16	8
75	1959-63	1 1/2	1	1/16	8
76	1959-61	1 1/2	1	1/16	8
100 Series	1961-63	1 1/2	1	1/16	8
114	1956-61	1 1/2	1	1/16	8
124	1956-61	1 1/2	1	1/16	8
134	1956-61	1 1/2	1	1/16	8
154	1956-61	1 1/2	1	1/16	8
200 Series	1961-63	1 1/2	1	1/16	8
214	1956-61	1 1/2	1	1/16	8
224	1956-61	1 1/2	1	1/16	8
244	1956	1 1/2	1	1/16	8
300 Series	1961-63	1 1/2	1	1/16	8
334	1956-61	1 1/2	1	1/16	8
344	1956-61	1 1/2	1	1/16	8
364	1956-61	1 1/2	1	1/16	8
374	1956-61	1 1/2	1	1/16	8

Engine Section

CYLINDER HEAD

Overhead Valve Engines

1. Remove all items which would interfere with the removal of the cylinder head.
2. Drain cooling system.
3. Remove intake and exhaust manifolds.
4. Remove rocker arm cover, and push rod cover (if equipped).
5. Remove rocker arm shaft assembly.
6. Remove rocker arm cups or valve caps and identify for reassembly.
7. Grip push rods and snap them sideways out of lifters. Identify push rods for replacement in original locations.
8. Unfasten and remove head.
9. Reverse removal procedure to install the head and tighten down in the sequence shown in Figs. 1, 2 and 3. On G-298H engine, tighten head by starting at the center and work progressively to the outer ends.

Side Valve Engines

In replacing the head, the stud nuts or bolts at the center of the head should be tightened first and then work progressively outward from side to side and to the ends, Fig. 4. Draw the nuts or bolts down evenly until all are normally tight. After the engine has been run long enough to reach normal operating temperature, make a final tightening to the torque specifications listed in the chart.

ROCKER ARMS

1. Disassemble rocker shaft by removing the retaining pin or plug from one end of the shaft and sliding off the component parts.
2. Inspect shaft for wear. If "shoulder" exists, the shaft must be replaced. Blow out oil holes with air.
3. Examine rocker arms for cracks, condition of valve contact surface and worn bushings. Replace all defective rocker arms or any having over .005" clearance between shaft and arm.
4. Check rocker shaft supports for cracks or other damage.

VALVE ROTATORS

Overhead Valve Engines

These rotators revolve each valve (if equipped) a definite amount each time the valve opens. Before an engine is disassembled for valve grinding or major repair work, the performance of the rotators should be checked as follows:

1. Remove rocker arm covers.
2. Observe valve rotation with engine running at moderate speed. The valves should rotate at uniform and constant speeds.

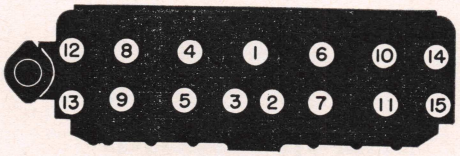

Fig. 1 Cylinder head tightening sequence. Super 6-252

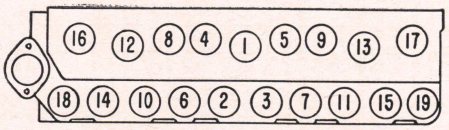

Fig. 2 Cylinder head tightening sequence. FO-6226 engine

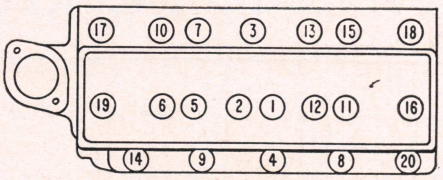

Fig. 3 Cylinder head tightening sequence. G-4193 engine

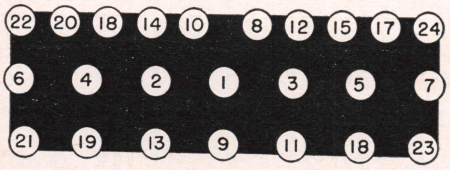

Fig. 4 Cylinder head tightening sequence. OXD, QXLD

3. Rotators that do not appear to be functioning properly should be replaced.

VALVES, REMOVE

Overhead Valve Engines

1. With cylinder head removed, take off rocker arm assemblies and exhaust manifold.
2. Use a suitable spring compressor to compress the valve springs.
3. Remove valve locks.
4. Release and remove spring compressing tool.
5. Remove springs and spring retainers. If burrs exist in lock grooves, file them off before removing valves.
6. Remove valves and place them in a board or rack with numbered holes so that they can be identified as to the valve port from which they were removed.

L-Head Engines

After taking off the cylinder head, remove the valve chamber covers and use a cloth to block off the holes in the valve chamber to prevent the valve locks from falling into the crankcase.

With a suitable valve spring compressor, raise the springs on those valves which are closed and remove the valve locks. Then turn the crankshaft until those valves which are open are closed and remove the remaining valve locks.

Remove all valves and place them in a board with numbered holes so that they can be identified as to the valve port from which they were removed.

VALVE SPRING TESTING

Wash all springs with gasoline or other suitable solvent. Examine the springs for damage or corrosion due to acid etching, which will develop into surface cracks and cause spring failure.

Check the valve spring tension on a spring testing fixture, if one is available, Fig. 5, and according to the specifications given in the *Valve Data* chart. If a fixture is not available, at least check the free length of each spring by standing it alongside a new spring. Any spring that does not conform to the pressure specifications within 10% should be replaced. Likewise, any spring that stands shorter than the new spring used for comparison should be discarded. Of course, cocked springs should also be scrapped.

VALVE SPRING INSTALLED HEIGHT

When valves and seats are reground the position of the valve in the head is changed so as to lessen the valve spring tension. Without proper valve spring tension the valve does not seat long enough or it may not seat completely. Since the valve is cooled by transferring heat from the valve head to the seat and thence to the coolant, improper valve spring tension will cause worn, pitted and distorted valves which result in loss of compression and power as well as poor gasoline mileage.

When valves, springs, retainers and locks are installed, measure the assembled height of the valve springs from the surface of the cylinder head spring pad to the underside of the spring retainer as shown in Fig. 6. If the assembled height is greater than the dimension given in the *Valve Specifications Chart*, install a spacer or shim of proper thickness between cylinder head spring pad and spring to bring the assembled height to specifications.

Do not install spacers unless necessary. Excessive use of spacers will result in overstressing valve springs and

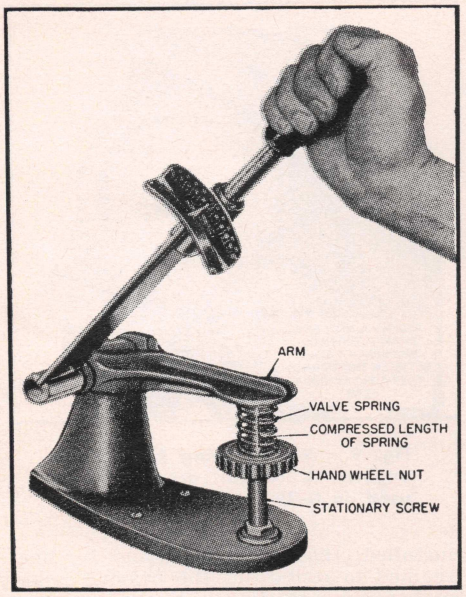

Fig. 5 Checking valve spring tension

overloading camshaft lobes which could lead to spring breakage and worn camshaft lobes.

VALVE GUIDES

Clean the valve guides with a wire guide brush and check the clearance between valve stems and guides. Excessive clearance will cause improper seating and burned valves. When there is too much clearance between intake valve stems and guides, there is a tendency to draw oil vapor through the guide on the suction stroke, causing excessive oil consumption, fouled spark plugs and poor low speed performance.

Valve stem-to-guide clearance may be checked with a dial indicator or a suitable plug gauge. Lacking either of these tools, take a new valve and place it in each valve guide and feel the clearance by moving the valve stem back and forth. If this check indicates excessive clearance, it will be necessary to replace the valve guide.

If the clearance is not excessive when checking with a new valve but is excessive when checked with the old valve, the old valve stem is worn and a new valve must be installed.

Valve guides may be removed and installed with a suitable puller and installer made for the purpose. If such equipment is not available, the old guides can be driven out or they can be pulled out by using a piece of pipe together with a long bolt and suitable washers.

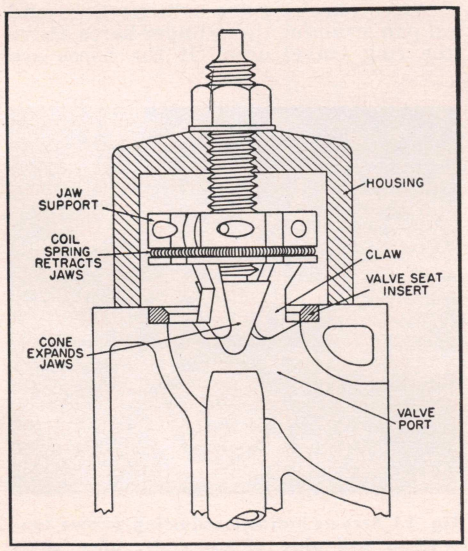

Fig. 7 Valve seat insert puller

VALVES, GRIND

Clean the valves with a wire wheel brush, making sure that all carbon is removed from the top and bottom of the heads as well as the gum which might have accumulated on the stems.

If refacing valves, take off only the minimum of metal required to clean up the valve faces. If the outer edge of the valve becomes too thin or sharp due to excessive grinding, the valve must be replaced. In other words, the valve head margin must be at least $\frac{3}{64}$", otherwise the valve must be replaced. This margin is the area above the contact surface of the valve face.

Inspect the valve seats in the block for cracks, burns, pitting, ridges or improper angle. During any general engine overhaul it is advisable to reface the valve seats regardless of their condition. If new valve guides are required, they must be installed and reamed before refacing the seats if the equipment used for refacing the seats has a valve guide pilot.

The valve seat width after refacing should be a liberal $\frac{1}{16}$" for intake seats but not more than $\frac{3}{32}$" in any case. The width of exhaust seats should be $\frac{3}{64}$" to a liberal $\frac{1}{16}$".

Test valves for concentricity with seats and for tight seating. Valves can be tested by lightly coating the valve face with prussian blue and turning the valve against its seat. This indicates whether the seat is concentric with the valve guide *but does not prove that the valve face is concentric with the valve stem, or that the valve is seating all around.*

After making this test, wash all blue from the surfaces, lightly coat the *valve seat* with blue and repeat the tests to see whether a full mark is obtained on the valve. *Both tests are necessary to prove that a proper seat is being obtained.*

VALVE SEAT INSERTS

Since these inserts are too hard to reface by the ordinary hand grinding method, a high speed grinder or special lapping equipment should be used to perform this operation. When using this equipment, be sure valve guides are clean and that the valve guide pilot is a snug fit in order to assure a concentric finish. Finished seats should be checked with a dial indicator and runout should not exceed .001".

To remove an insert (if a suitable puller is not available, Fig. 7) drill two holes at opposite sides of the insert but not all the way through. Then cut out the undrilled portion with a sharp chisel and remove the two pieces.

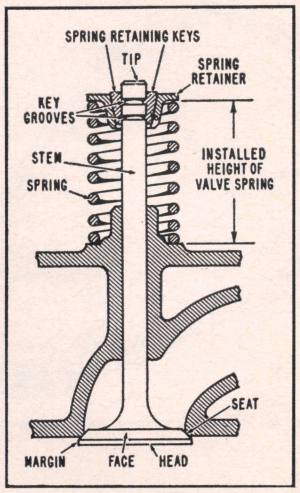

Fig. 6 Checking valve spring installed height

To install a new insert, first remove all burrs and sharp edges from the seat recess. Then chill the new insert with "dry ice" to obtain maximum contraction of the metal and place it in the recess. If necessary, the insert may be pounded in by using a round driver the same size as the insert and pounding on same with a hammer.

If a standard insert is too loose, secure an oversize one. Of course, the recess should be bored out to accommodate the oversize insert.

When installed, peen the block around the insert bore to insure the insert remains in place.

VALVE LIFTERS

F-4162, F-4162S, FO-6226 Engines

Barrel type lifters are used which are the same diameter throughout their length. When necessary, these lifters may be removed from above after taking out the push rods.

G-4193, 6-252, G-298H, QXD, QXLD

These engines utilize mushroom type valve lifters having a base larger than the bore in which they operate. This design makes it necessary to remove the camshaft in order to remove the lifters from below.

On QXD and QXLD engines, if the lifter bores are bushed, the bushings may be pressed out and replaced. After replacement, bushings should be reamed to provide operating clearance.

PUSH RODS

Before installing push rods, inspect them for bends or twists, and examine the ball and cup ends for excessive wear. Any push rod that is defective should be replaced.

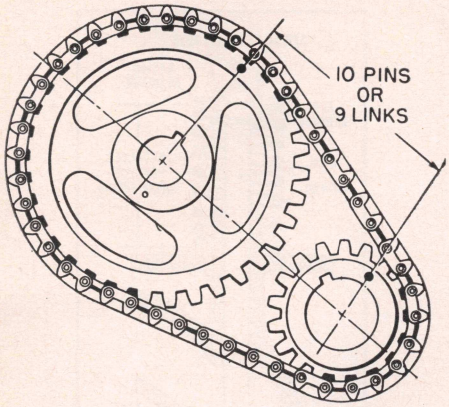

Fig. 8 Valve timing. F4162 engine

TIMING GEARS

F-4162, F-4162S, G-4193, G-298H, QXD, QXLD

Camshaft and crankshaft gears should be replaced in pairs, and gears marked similarly with respect to size should be used. Usually, crankshaft and camshaft gears are furnished in standard, undersizes and oversizes. Gears marked "S" are standard; "U" undersize, and "O" oversize. Figures within the latter two letters, such as "1" or "2", would indicate the variation in thousandths of an inch from the standard size. Gears can be selected to give the desired fit.

Crankshaft gear installation may be facilitated by heating it in oil. This will allow it to slide easily on the crankshaft. Light tapping may be required to seat the gear fully.

The camshaft gear may be tapped lightly into place. However, do not allow the camshaft to bump the expansion plug at the rear as this could cause an oil leak. Be certain that the timing marks on the gears are in mesh as shown in Figs. 8 and 9.

Check the gear backlash with gears assembled in place. Pry the teeth as far apart as possible with a screwdriver and check with a feeler gauge. If a .015" feeler gauge will not enter the gap between the teeth, clearance is not excessive.

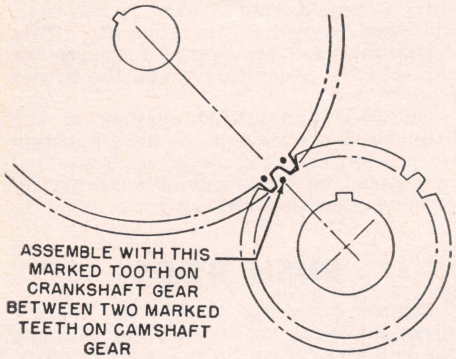

Fig. 10 Valve timing. FO-6226 engine

TIMING CHAIN

FO-6226 Engine

1. To remove chain and sprockets, remove nut and locking plate on cam sprocket.
2. Pull chain sprockets from camshaft and crankshaft evenly. This can be done with small pry bars, being careful not to damage sprockets or chain.
3. When replacing, be sure to have the chain properly lined up as shown in Fig. 10. Then slide sprockets and chain on crankshaft and camshaft evenly. *Be sure to hold the camshaft forward by installing a pry bar in the fuel pump opening, as failure to do this may loosen the plug at rear of the cylinder block, causing an oil leak.*

CAMSHAFT & BEARINGS

F-4162(S), G-4193, FO-6226, 6-252, G-298H

1. With timing case cover removed, bring No. 1 piston to top dead center.
2. Remove screws retaining camshaft thrust plate to block (not on 6-252). This can be done only with the cam gear removed. If thrust plate indicates scoring or wear, replace without question. (On 6-252 engine, camshaft end thrust is controlled by flanges on the front bearing. If end play becomes excessive, remove the old and install a new front bearing.)
3. In G-4193, 6-252 and G-298H engines, the mushroom type valve lifters must be raised as high in their bores and possible in order to remove the camshaft. The valve lifters can be removed, if necessary, from the bottom of the block after the camshaft and oil pan are removed.
4. On FO-6226 engine, the barrel type lifters are accessible through the push rod chamber cover. On F-4162(S) engines, the lifters may be lifted out through the valve chamber after the valves have been removed.
5. On all engines, remove fuel pump, allowing camshaft to be pulled from block.
6. If necessary to replace camshaft bearings, service bearings are available which require no reaming. Care should be exercised when installing new bearings to properly align the oil holes in the bearings with those in the block.
7. Make certain No. 1 piston is at top dead center when reinstalling camshaft.

QXD, QXLD Engines

The camshaft is supported on four babbitt-lined bearings. Replacement camshaft bearings are cut to allow for a press fit when the bearings are pressed into the block. Therefore, no reaming should be necessary. However, the shaft should be checked in the bearings for proper clearance of .0015-.0025". If there is binding of the camshaft when it is installed, the bearings should be line-reamed to round out the bearing holes, as bearing distortion is likely the cause of the binding condition.

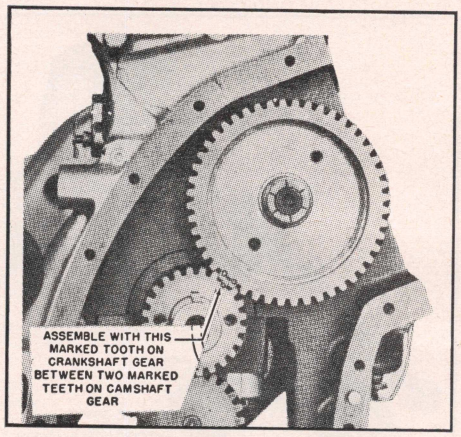

Fig. 9 Valve timing for G-4193 engine. A similar arrangment is used on G-298H and QXLD engines

Camshaft end thrust is controlled by a special screw through the gear cover, Fig. 11. At long intervals or when the engine is disassembled for repairs the end play should be checked. If an adjustment is required, loosen the lock nut and tighten the screw until the fibre plug at its inner end contacts the steel plug in the front end of the camshaft. Then back off the screw 1/8 turn before tightening the lock nut.

The camshaft must be removed in order to install a new camshaft gear. This is done by removing the gear cover, crankshaft oil slinger, and oil pan. Remove the valves and raise the lifters so they will not interfere with the camshaft as it is being withdrawn. The camshaft gear can only be pressed on the camshaft from the rear against the flange on the front end of the shaft.

PISTONS & RODS, REMOVE

After removing the cylinder head and oil pan, examine the cylinder bores above the ring travel area. If the bores are

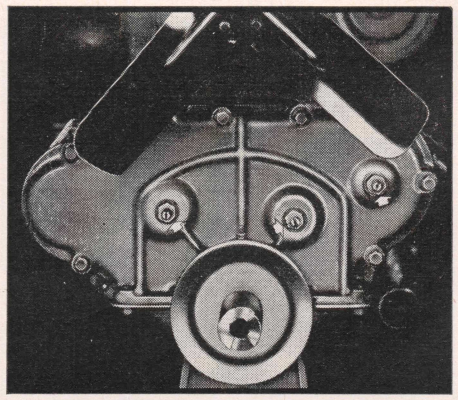

Fig. 11 Arrows indicate adjusting screws controlling end play of camshaft, idler shaft and accessory shaft. QXD and QXLD engines

worn so that a ridge exists at this point, remove the ridge with a ridge reamer to avoid damaging ring lands of pistons during removal.

Before removing pistons, mark them with a file (if not already marked) on the inside of the skirt to indicate the bore from which each piston was removed and also its position in the bore with relation to the camshaft side of the engine. Connecting rods should also be suitably marked if they are not marked already.

Remove the connecting rod caps and push the assemblies out of the cylinders, using care to prevent rod bolts from nicking crankshaft journals. It is advisable to install caps on rods as they are removed to avoid mixing parts.

PISTONS & RODS, ASSEMBLE

If the pistons and rods have factory markings to indicate their position in the cylinders, assemble and install them according to these marks, or according to the marks made during removal if they were not otherwise marked.

PISTONS

Before a honing or boring operation is started, measure all new pistons with a micrometer at points 90° away from the piston pin. Then select the smallest piston for the first fitting. The slight variation usually found between pistons in a set may provide for correction in case the first piston is fitted too free.

It is important that refinished cylinder bores are trued up to have not more than .0005″ out-of-round or taper. Each bore must be final honed to remove all stone or cutter marks and provide a smooth surface. During final honing, each piston must be fitted individually to the bore in which it will be installed and should be marked to insure correct installation.

After final honing and before the piston is checked for fit, each bore must be thoroughly washed to remove all traces of abrasive and then dried thoroughly. The dry bore should then be brushed clean with a power-driven fibre brush.

Both the piston and cylinder block must be at room temperature (70°) when the piston is checked for fit in the bore. Therefore, the cylinder should be allowed to cool after boring or honing and before the piston fit is checked. This is important because a difference of 10° between the temperature of parts is sufficient to produce a variation of .0005″.

PISTON RINGS

When new rings are to be installed without reboring cylinders, the glazed cylinder walls should be slightly dulled but without increasing the diameter of the bore. This is done with a "Glazebuster" or a hone equipped with the finest grade of stones.

New rings must be checked for clearance in piston grooves and for gap in cylinder bores. The latter operation must be measured with the ring about two inches from the bottom of the cylinder bore to which it is to be fitted. Cylinder bores and piston grooves must be clean, dry and free from carbon and burrs.

Check the clearance of each ring in its piston groove by installing the ring and then inserting feeler gauges *under* the ring. Any wear that occurs in the piston groove forms a step or ridge at the inner portion of the lower land. If gauges are inserted above the ring, the ring may rest on the step instead of on the worn portion of the lower land and a false measurement of clearance will result.

If the piston grooves have worn to the extent that relatively high steps or ridges exist on the lower lands, the piston should be replaced because the steps will interfere with the operation of the new rings and ring clearances will be excessive. Piston rings are not furnished in oversize widths to compensate for ring groove wear.

PISTON PINS

To fit a pin in an aluminum piston, heat the piston in a pail of boiling water for several minutes. Then remove the piston and quickly insert the pin. A good fit is one which requires a light push of the thumb to insert the pin.

For cast iron pistons, a good fit is one which requires a light push with the palm of the hand to insert the pin with both parts at normal room temperature.

ROD BEARINGS

Connecting rod bearings can be replaced without removing the piston and rod assemblies merely by taking off the rod cap and replacing the upper and lower bearing halves.

The clearance between the bearings and crankshaft can be measured with Plastigage as follows:

1. Remove bearing cap and wipe oil from crankshaft journal and bearing.
2. With crankpin at approximately bottom dead center, place a piece of Plastigage in the center of the bearing, Fig. 12.
3. Reinstall the bearing cap and tighten the bolts to the torque value given in the *Engine Tightening* table.
4. Remove the bearing cap again and check the bearing clearance by measuring the width of the flattened Plastigage. The measuring strip is supplied in the same envelope which contains the Plastigage.

MAIN BEARINGS

Caution—Main bearing clearance can be checked with Plastigage in the same manner described for rod bearings. If bearings are measured with the engine in the chassis, the crankshaft must be supported in order to take up clearance between the upper bearing insert and crankshaft journal. This can be done by tightening bearing caps of adjacent

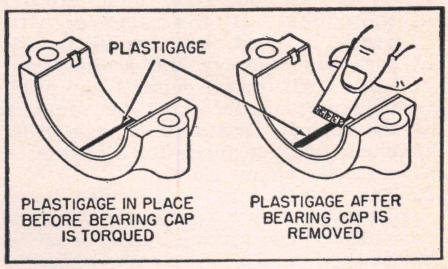

Fig. 12 Checking bearing clearance with Plastigage

bearings with .005″ to .015″ cardboard, (such as a calling card) between lower bearing shell and journal. Use extreme care when this is done to avoid unnecessary strain on the crankshaft or bearings or a false reading may be obtained. Do not rotate crankshaft while Plastigage is installed. *Be sure to remove cardboard.* To install new bearings, proceed as follows:

1. Remove bearing cap and worn lower shell.
2. Rotate crankshaft in normal direction to turn upper bearing shell out of crankcase. Use a cotter pin with a flattened head or the special tool made for the purpose in the crankshaft oil hole, to contact the bearing and force it out.
3. Place a new upper shell on the crankshaft journal with the locating notch in the correct position and rotate the shaft to turn the bearing in place.
4. Install the lower bearing shell in the cap.
5. Tighten ball cap nuts to the torque value given in the *Engine Tightening* table.

CRANKSHAFT OIL SEAL

G-4193 Engine

The rear crankshaft oil seal is of the "spring" type which keeps the dust out and the oil in. This seal contacts the polished surface of the crankshaft flange, and is pressed into a seal retainer which bolts to the rear of the cylinder block. To replace worn seals, proceed as follows:

1. Remove capscrews attaching seal retainer to block.
2. Remove old seal with a seal driver which fits the seal.
3. Press in a new oil seal.
4. Examine the seal contact surface in the block carefully. Any scratches or other damage to this surface must be polished out before reassembly of the seal to prevent further damage and thus render it ineffective.
5. Mount oil seal and retainer to cylinder block.

F-4162(S), FO-6226

This engine uses the jute-packing type of rear seal. To replace this packing and reassemble the rear seal, proceed as follows:

1. Remove filler block and oil guard, the latter being the semi-circular die casting which fits in the cylinder block in a groove machined just to the rear of the main bearing.

2. Clean all surfaces and grooves thoroughly. If a scraper or wire brush is used, be careful not to scratch or gouge the sealing surfaces. All dried cement or other foreign material must be removed from these surfaces. Check filler block contact faces for flatness; if warped, replace block.
3. The jute packing, as received, has a diameter about ⅓ greater than the width of the grooves. This must be crushed in a vise, or otherwise flattened, narrow enough to be inserted in the grooves.
4. Press flattened packing in both filler block and oil guard as well as possible by hand. Then, using a piston pin, smooth hammer handle or other tool with a smooth rounded surface, iron this packing into the groove so that it is seated firmly and expanded to grip the sides.
5. With a sharp knife or razor blade, cut off the excess packing protruding from the ends of the groove parallel to the surface of the casting, allowing it to protrude 1/32".
6. To assemble to the engine, coat the outer or sealing surface of the oil guard with a non-hardening cement. Slide it into place around the crankshaft if engine is still assembled, or directly into the recess if the crankshaft is out. When the assembly is made as outlined, and the filler block assembled and tightened in place, and completed with a new oil pan gasket, there is no possibility of oil leakage developing at this point.

G-298H Engine

The rear oil seal is mounted in the bellhousing behind the flywheel. The seal is of the one-piece circular spring type and seals against the polished surface of the crankshaft flange. If necessary to replace the seal, the flywheel will have to be removed.

QXD & QXLD Engines

If a new flywheel housing is to be installed or if the engine is disassembled for repairs the clearance between the crankshaft oil slinger flange and the flywheel housing must be carefully controlled to prevent oil leaks.

To measure the clearance, force the crankshaft back to the limit of its end play and insert a feeler gauge between the flange and flywheel housing chamfer. The clearance should be .012-.025", Fig. 13. If necessary to increase the clearance, scrape the chamfer or install an additional gasket between the flywheel housing and the case. To prevent oil leaks, all possible chance of interference or rubbing should be eliminated at this point.

It is important that the oil seal, Fig. 13, be installed concentric with the crankshaft. To prevent rapid wear of this seal, the external pilot of the flywheel hub should be polished with a very fine emery or crocus cloth to remove all nicks and rough spots.

Super 6-252 Engine

Oil sealing at the rear main bearing consists of a steel-backed synthetic rubber seal, Fig. 14. The rubber seal

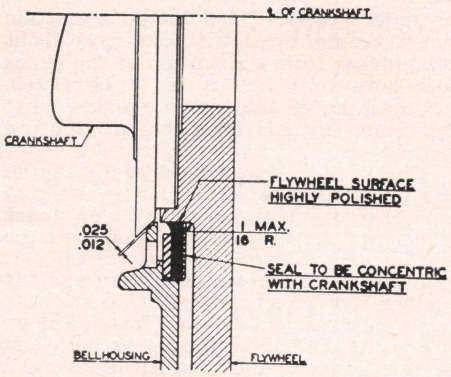

Fig. 13 Oil sealing at rear of QXD engine

is in halves and fits closely over the edge of the rear main bearing oil return groove. It bears firmly on the smooth area of the crankshaft. Synthetic rubber key strips are used at the sides of the rear main bearing cap. These strips overlap the bearing cap and seal the sides as well as the mating surfaces.

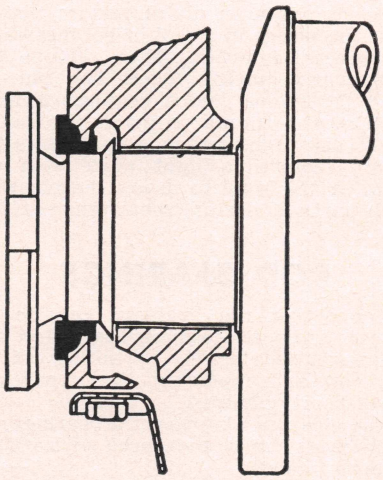

Fig. 14 Oil sealing at rear main bearing. Super 6-252

OIL PUMP

G-4193 Engine

This oil pump is assembled to the front main bearing cap, being held in place by the main bearing capscrews. The drive gear meshes with and is driven by the crankshaft gear (see Fig. 9). These gears have a specified .004-.008" drive or clearance fit which must be checked when reassembling the engine. Shims are available to increase the center distances of the oil pump and crankshaft gears to maintain this fit.

The pressure relief is located on the bottom of the pump body just below the drive gear. Pressure is controlled by a plunger and spring, and may be increased by assembling washers ahead of the cotter pin in the plunger bore.

FO-6226 Engine

This oil pump is externally mounted and driven off a gear on the camshaft. A gear assembled to the upper end of the oil pump shaft is driven by a mating gear cut on the camshaft. A by-pass type of relief is built into the pump so that surplus oil is recirculated.

The oil pressure relief is located externally on the right side of the pump. Pressure is controlled by a plunger and spring, the latter being specifically for a certain range. The only adjustment variation is either to change springs, or assemble or remove washers from behind the present spring. Up to four washers are permissible.

Installation—When installing the oil pump on this engine, the distributor should be removed. If the engine is completely disassembled, the oil pump should be installed only after the crankshaft, flywheel, camshaft and timing gears.

1. Turn engine over to No. 1 firing position. Be certain timing mark on flywheel coincides with pointer on flywheel housing.
2. Position oil pump distributor drive slot as shown in Fig. 15. Note that the slot is offset and that the narrow segment of the shaft is to the top.
3. Place gasket on pump body face, using a small amount of grease to retain it.
4. Insert pump shaft into bore, using care to avoid turning gear before it meshes with drive gear on camshaft. As this occurs, the slot in the shaft will appear nearly horizontal when viewed down the distributor shaft bore.
5. Assemble retaining screws.
6. Chalk-mark the No. 1 terminal position on the distributor body and install the distributor. The rotor should point to this mark when it is installed.

G-298H Engine

Removal

1. Remove oil pan.
2. Turn engine over to place No. 1 piston in firing position.
3. Unfasten and remove pump.

Installation

1. If engine has not been disturbed (No. 1 piston in firing position), install pump and secure in place.
2. If engine has been moved from the

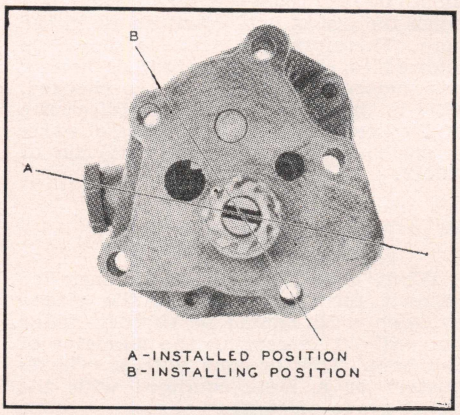

Fig. 15 Installing oil pump on FO-6226 engine

No. 1 firing position, place the piston in firing position. Then turn oil pump drive gear so that flat on flange is to the outside of the pump (side opposite pressure regulator).

3. With flat towards camshaft, insert pump into cylinder block and rotate pump to correct position for attaching screws. *Pump should not be rotated until after drive gear is meshed with gear on camshaft.*
4. Install attaching screws. If distributor was not removed, use care when the pump is installed that the tongue of the distributor drive coupling engages the groove in the pump drive gear with the distributor rotor in firing position for No. 1 cylinder.

Super 6-252

On these engines, the oil pump drive gear which meshes with the camshaft gear is splined to the top end of the oil pump shaft, Fig. 16. The spline is a free fit so that it may be removed from below after the oil pump is dropped. The oil pump drive gear is installed from above after the distributor bracket and gear have been removed.

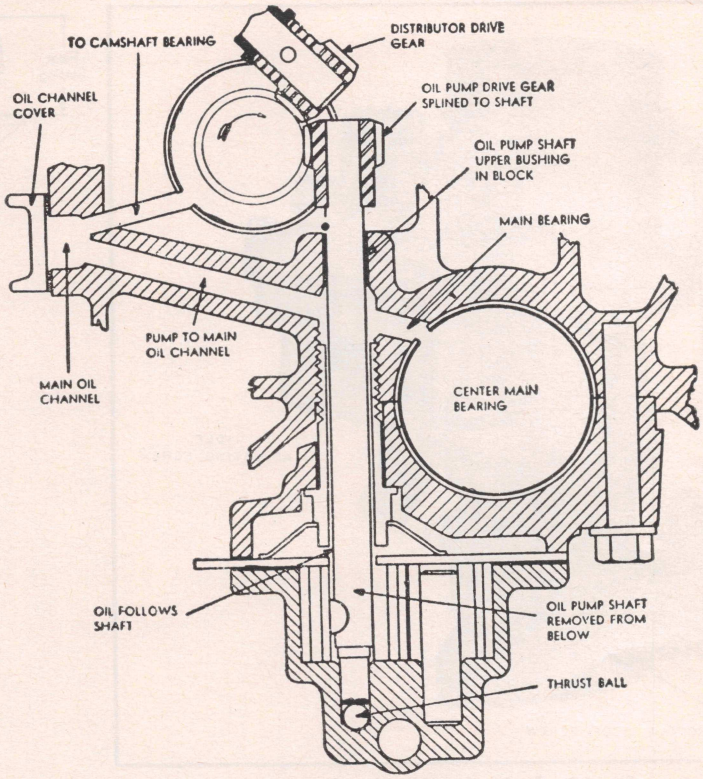

Fig. 16 Oil pump mountings. Super 6-252

WATER PUMP

G-4193, FO-6226

Disassemble, G-4193

1. Remove bolt from impeller hub and with a puller remove impeller from shaft. *Do not drive or pound on pump shaft or carbon seal on shaft will be damaged.*
2. Remove impeller snap ring and remove seal from impeller hub.
3. If shaft is to be removed, loosen set screw and, with a puller, pull fan hub from shaft.
4. Remove snap ring and press shaft and bearing assembly out of pump body toward the front end.

Disassemble, FO-6226

1. Pull fan hub from shaft, Fig. 17.
2. Remove pump from engine.
3. Remove pump cover by taking out countersunk screws.
4. Use puller to remove impeller. *Do not attempt to drive pump shaft out through rear of housing as housing will be ruined.*
5. Remove seal and water shedder.
6. Remove lock ring holding shaft and bearing assembly in body. Then force shaft out of body with a lead hammer or arbor press.

Reassemble, G-4193, FO-6226

1. Reassemble pump, replacing worn or damaged parts and reverse disassembly procedure. Seal contact surface must be smooth and flat. Bushing should be replaced if scored or cut, but may be refaced and polished for further use if not excessively worn or grooved.
2. Use thick soapsuds on both seal and shaft when assembling to prevent damage to seal.
3. Mount pump on engine using a new housing gasket.

QXLD, G-298H, F-4162(S)

Water pumps used on these engines are fundamentally the same as shown in Fig. 17.

Super 6-252 Engine

A "packless" sealed type water pump is used on these engines. The seal is of "cartridge" construction, installed and serviced as a unit. The sealing member is enclosed in a metal cartridge which is mounted and sealed in the pump body by means of a flexible rubber ring. The sealing member is pressed against the shaft by constant spring pressure exerted through the bushings. The spring chamber also acts as a reservoir for lubricant.

IGNITION TIMING

If a timing light is to be used to set ignition timing, disconnect the vacuum advance pipe to the carburetor and place a piece of tape over open end of pipe. *This is important as carburetor trouble can effect timing adjustments.*

Lacking a power timing light, an accurate method of setting ignition timing with the engine stopped is with the aid of a jumper light. Be sure to use a light bulb that corresponds with the system voltage of the vehicle.

1. Remove distributor cap and rotor and see that the breaker gap is set according to specifications.
2. Rotate engine until No. 1 cylinder is at the ignition timing point as indicated by the timing pointer and timing mark being lined up with each other.
3. Connect the jumper light between distributor ignition terminal and ground.
4. Turn on ignition switch.
5. Loosen distributor and turn it in the direction of normal rotation until the points just close (light out). Then slowly turn distributor in the opposite direction just to the exact point that the light goes on. Tighten distributor in this position.

ZENITH CARBURETORS

Before making any adjustments on the carburetor, it is important that the breaker points and spark plugs are in good condition and properly set. The ignition timing should be checked and the valves operating properly.

Check all carburetor body and flange screws for tightness and make sure there are no gasket leaks. A typical Zenith downdraft carburetor is shown in Fig. 19.

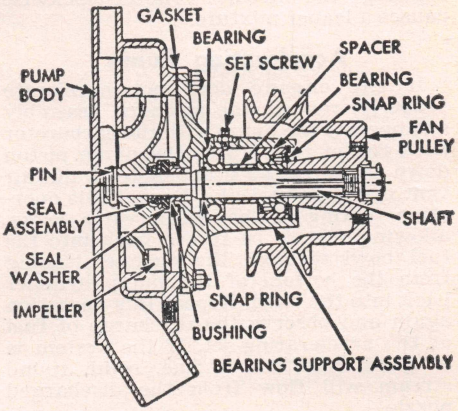

Fig. 17 Water pump. FO-6226

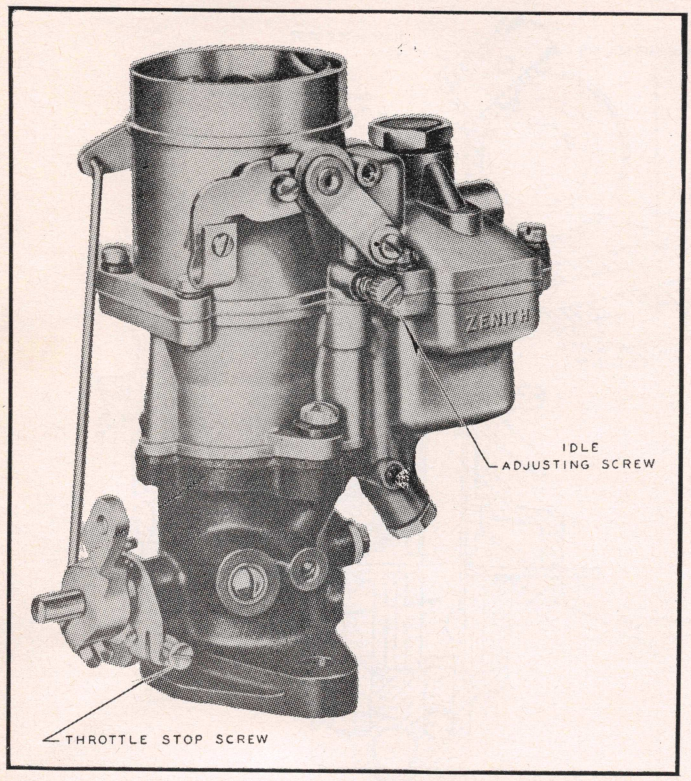

Fig. 19 Zenith downdraft carburetor

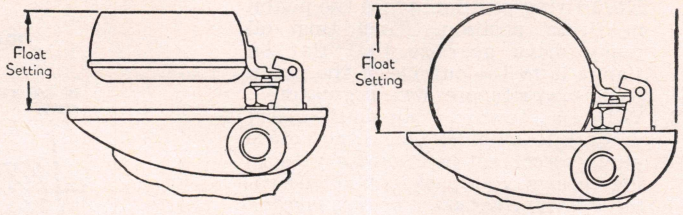

Fig. 20 Float setting. Zenith carburetors

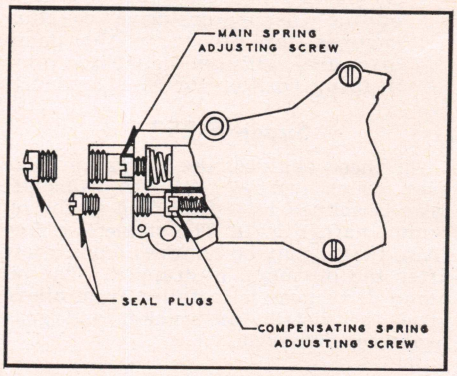

Fig. 21 Carburetor governor adjustment

Float Level

As shown in Fig. 20, measure the distance between bottom of float and machined surface of casting. Hold casting, without gasket, upside down as shown. With float closed, distance indicated should be as given below. To change float setting, bend float lever (close to float body) as required.

Truck models 11, 12, 13.....1 5/32″
Trucks with engine models:
G-4192, FO-6626, G-298H.....1½″
QXLD, F-4162 (S).....1 39/64″

Idle Speed & Mixture Adjustment

The idle adjustment should be set to the highest and steadiest vacuum reading with a vacuum gauge. Idle speed is regulated by the throttle stop screw, Fig. 25. Idle mixture is controlled by the idle adjustment needle. Turning the needle clockwise increases the suction on the idle jet and causes a richer mixture. Turning the needle counter-clockwise causes a leaner mixture.

Accelerating Pump

If the engine does not accelerate properly, remove the air horn assembly and operate the pump with the carburetor bowl full of fuel. Force the pump piston down in its cylinder and note if the air vent check valve leaks. Repeat this operation, noting if the check valve leaks, allowing fuel to be forced back into the fuel bowl through the channel leading from the bottom of the pump cylinder back into the bowl. Repeat this operation again and observe the discharge of fuel at the accelerating jet. If the system is in good condition, a fine, solid, round stream will flow from the discharged nozzle.

Intermediate Operation

If trouble is encountered during intermediate speeds, check all gaskets for tightness. Remove and clean main jet, passages and main discharge nozzle with compressed air.

High Speed Operation

For high speed complaints, check the power valve and high speed restrictions as well as the main jet. Check the fuel pump pressure to see if it is sufficient to maintain proper fuel level in bowl. Float travel should also be observed for full opening of the float needle valve. The vacuum piston should fit properly in place and operate satisfactorily with no air leaks between piston and intake manifold.

CARBURETOR GOVERNOR

If smooth accurate governor action is to be obtained, friction of the throttle shaft and its bearings must be avoided. Most governor failures are due to the accumulation of carbon on the throttle shaft bearings.

Many governor failures can be temporarily corrected without complete disassembly of the carburetor and governor by the application of a good penetrating oil to the throttle shaft bearings. These can be reached by removing the carburetor and applying penetrating oil to the throttle shaft openings on the inside of the throttle body bore. Use care when applying the oil as excessive use will increase carbon formation.

Speed Adjustment

1. Warm up engine to normal operating temperature.
2. Remove seal wire and large seal plug, Fig. 21.
3. To increase speed, turn main spring adjusting screw clockwise; to reduce speed, turn counter-clockwise. *If governor does not show definite response to changes of ¼ to 1 full turn, It indicates a defective governor.*
4. After adjustment has been made, install seal plug and wire.

Surge Elimination

Surge is a condition of intermittent increase and decrease of engine speed. If a surge has developed or the governor is too sensitive, adjust as follows:

1. Romove seal wire and small plug, Fig. 21.
2. Turn compensating spring block adjusting screw ¼ turn counter-clockwise until surge is overcome.
3. Install seal plug and wire.

Slow Governor Correction

If the governor does not respond quickly enough when the governed speed is approached and the action can be considered "lagging" or "flat", adjust as follows:

1. Remove seal wire and small seal plug, Fig. 21.
2. Turn compensating spring block adjusting screw clockwise until "lag" or "flatness" is overcome. *Do not change adjustment more than ½ turn at a time without checking performance of vehicle on the road.*
3. After adjustment has been made, install seal plug and wire.

Clutch, Transmission & Rear Axle Section

For Warner and Divcomatic Transmissions used on Divco trucks, see the "name" chapter for service procedures and lubricant capacities

For Eaton and Timken (Rockwell) driving axles used on Divco trucks, see the "name" chapters for service procedures and lubricant capacities

LONG SEMI-CENTRIFUGAL CLUTCH

This type clutch, Figs. 1 and 2, employs centrifugal force to increase the pressure against the pressure plate and clutch plate at higher speeds, in addition to using conventional spring pressure. The release levers are provided with small centrifugal weights, Fig. 2, which are integral parts of the levers. As the clutch rotates at high speeds, these heavy ends of the levers tend to move outward and exert additional pressure against the pressure plate.

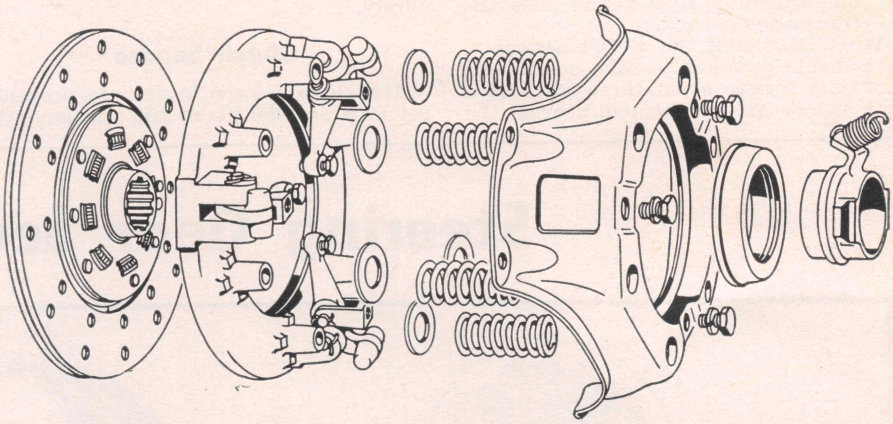

Fig. 1 Layout of Long Semi-Centrifugal clutch parts

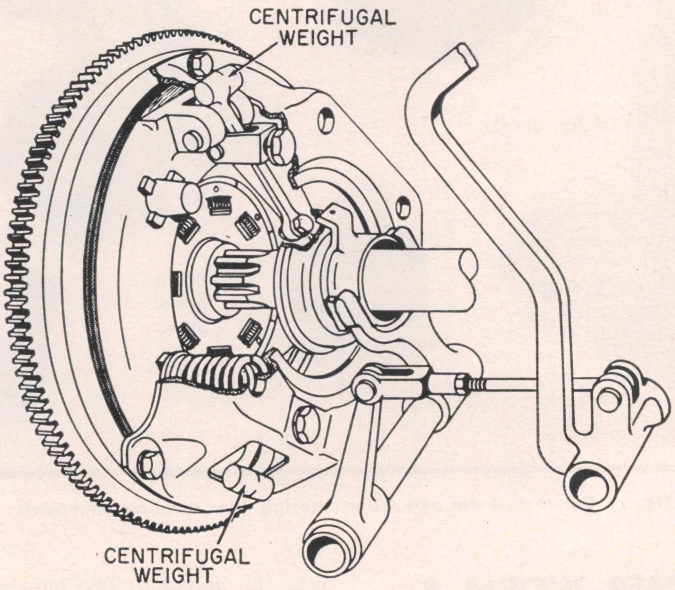

Fig. 2 Long Semi-Centrifugal clutch

Clutch Control, Adjust

Unless the clutch control linkage is removed, the only adjustment is the length of the clutch release rod or rods. Before any adjustments are made, first make certain that the pedal shaft and throwout shaft operate freely. The pedal shaft is equipped with bushings and lubricated through grease fittings in the bearing housings. The throwout shaft operates in the clutch housing with grease fittings in the clutch housing.

This rod adjustment is made to obtain proper clearance and thus compensate for normal lining wear. With the foot pedal in its normal raised position, the length of the rod or rods is adjusted to obtain a minimum of $\frac{1}{16}$" free movement between the working face of the clutch throwout bearing and the clutch release levers. This will represent a free movement of the clutch pedal of about $\frac{13}{16}$" on Stand Drive Controls and about 1½" on Sit Drive Controls. Lengthen or shorten the rod or rods to maintain free play at the pedal to insure $\frac{1}{16}$" clearance at the throwout bearing.

On Combination Stand-and-Sit Drive models, with the clutch foot pedal and the clutch and brake pedal in their normal raised position, the length of the slip type release rods are adjusted to obtain a minimum of $\frac{1}{16}$" free movement between the clutch release bearing and release levers. This will represent a free movement of ⅛" at the clutch release rod and the eye pin, resulting in free movement at the pedals of about $\frac{13}{16}$" on Stand Drive Controls and about 1½" on the Sit Drive clutch pedal.

Clutch & Brake Pedal Travel

On Stand Drive models with $\frac{13}{16}$" foot pedal clearance at pedal pad as outlined above, depressing the foot clutch brake pedal about $3\frac{9}{16}$" will completely release the clutch. Further pedal travel will cause no more movement of the throwout shaft due to the design and function of the clutch release cam and rocker arm and roller assembly, but will cause the brake to be applied.

Clutch, Replace

Note—When the clutch is to be removed, the transmission need not be removed completely.

1. Remove clutch and brake pedal pads.
2. Remove front floor, toe boards, front cross panel center, seat bracket and toe and floor board support channel. *While removing channel, disconnect carburetor rod at accelerator cross shaft lever and the cotter pin at the right hand end of the shaft, leaving the accelerator shaft attached to channel.*
3. Remove attaching screw at rear of right hand floor support channel.
4. Disconnect propeller shaft at rear axle, fastening the end in such a way that the shafts do not separate

at the spline.
5. Disconnect clutch release rod or rods at the clutch throwout shaft lever.
6. Disconnect shifter and selector rods at transmission control tower.
7. Disconnect ratchet release rod, speedometer cable and parking brake cable at transmission.
8. Place a bar across from front of rear floor to flywheel bell housing (with block of wood under bar at bell housing). Hang a rope sling from the bar and under the transmission to secure the transmission.
9. Remove clutch housing-to-bell housing attaching screws and slide the transmission back.

When removing the clutch assembly, care should be taken to back out the six attaching screws about three turns at a time successively. This will prevent the clutch cover from being distorted by permitting the tension of the clutch pressure springs to be held by two or three screws.

Do not permit the weight of the transmission to hang on the driven disc for if it is bent it will necessitate excessive pedal travel to release the clutch.

Upon installing, always use a pilot shaft through the driven disc. When assembling the clutch to the flywheel, turn all attaching screws in finger tight. Then tighten with a wrench each screw not over two turns at a time. Go from one side of the clutch to the other until all attaching screws are tightened securely.

Clutch Service

The three release levers are properly set in a parallel plane and permanently locked at assembly. They will require no further attention during the life of the clutch, and they cannot be serviced. The pressure springs are set on asbestos base insulator washers where they rest on the pressure plate.

TRANSMISSIONS

Trans. Removal

Follow the procedure outlined for removing the clutch. In addition, remove the bolts attaching the front of the front propeller shaft, transmission brake drum and transmission companion flange. Then slide the transmission back and out of the vehicle.

Reverse the removal procedure to install the transmission and clutch.

Steering Gear Section

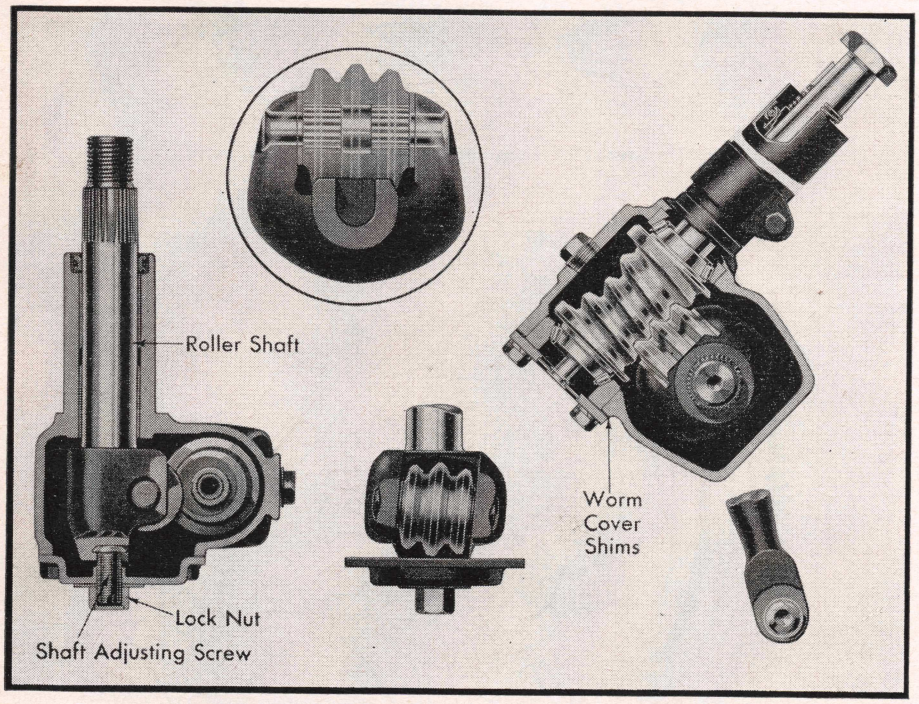

Fig. 1 Gemmer worm and roller steering gear used on all models

GEMMER WORM & ROLLER STEERING GEAR

This type steering gear, Fig. 1, is used on all models. The steering gear worm is integral with the steering shaft and is supported on each end by opposed tapered roller bearings. The triple tooth roller is attached to the roller shaft by means of a steel shaft. Two needle bearing assemblies are installed between this shaft and the roller.

The roller shaft is mounted in the steering gear housing on two needle bearing assemblies which are pressed into the housing. The housing cover is attached to the gear housing by four cap screws. An adjustment screw, mounted in the cover controls roller shaft end play and worm and roller mesh adjustment.

The steering wheel and roller shaft arm (pitman arm) are splined to the steering shaft and roller shaft respectively. Both the pitman arm and steering wheel have master splines to insure correct installation.

Worm End Play, Adjust

1. Free the steering gear of all load by disconnecting the drag link and loosening the steering column braces.
2. Loosen the four cover screws about 1/8".
3. Use a knife to separate the top shim, passing the blade all the way around between the shims, being careful not to damage the remaining shims.
4. Remove one shim at a time between inspections to remove the end play.
5. The adjustment is correct when there is no end play and no stiffness in the steering gear throughout the complete range of its travel.

Roller Shaft End Play, Adjust

1. Turn the steering gear to either extreme and back 1/8 of a turn.
2. Gripping the pitman arm at the hub, the roller shaft should rotate freely without a particle of end play.
3. If end play exists, adjust as required by means of the roller shaft adjusting screw in the side cover.
4. Be sure to tighten the lock nut securely and inspect for end play and free rotation throughout the entire range of steering gear travel.

Worm & Roller Mesh, Adjust

1. Loosen the roller shaft adjusting screw lock nut.
2. With steering gear in its central position (drag link disconnected) tighten the roller shaft adjusting screw just enough to remove play between the roller shaft roller tooth and worm.
3. Check this by the amount of play felt at the pitman arm. It is better to leave a slight amount of play at this point than to tighten too much.
4. If tightened beyond the point where the lash is removed, serious results will occur which will cause poor steering operation.
5. Tighten the adjusting screw lock nut.

DODGE

INDEX OF SERVICE OPERATIONS

PAGE NO.

AXLES, DRIVING

Dodge Axles 559
Eaton Axle Service 176
Locking Differentials 169
Timken Axle Service 209

BRAKES

Adjustments 252
Air Brake System 259
Hydraulic Brake System 250
Vacuum Brake Boosters 268

CLUTCH 552

COOLING SYSTEM

Cooling System Capacity 522
Water Pump Repairs 547

ELECTRIC SYSTEM

Alternators & Regulators 37
Alternator Specifications 529
Dash Gauge Service 93
Distributor Specifications 531
Distributor Service 7
Generator Specifications 530
Generator & Regulator Service 27
Ignition, Transistorized 22
Ignition Timing 547
Starting Motor Specifications 528
Starting Motor Service 65
Starter Switch Service 85

ENGINE

Camshaft & Bearings 543
Crankshaft Bearing Specifications 529
Crankshaft Rear Oil Seal 545
Cylinder Head, Replace 537
Engine, Replace 534
Main Bearings, Replace 545
Piston Pins, Replace 544
Piston Rings, Replace 544
Piston & Ring Specifications 529
Pistons & Rods, Remove 544
Piston & Rod, Assemble 544
Pistons, Replace 544
Rocker Arm Service 538
Rod Bearings, Replace 544
Timing Case Cover, Replace 542
Timing Chain or Gears, Replace 543
Valves, Adjust 538
Valves, Grind 539
Valve Guides 540
Valve Lifters 541

PAGE NO.

Valves, Remove 539
Valve Seat Inserts 539
Valve Specifications 526
Valve Springs 539

ENGINE OILING

Crankcase Capacity 522
Crankcase Ventilation 6
Oil Pump Repairs 545

FUEL SYSTEM

Carburetor Adjustments 548
Carburetor Governors 551
Carburetor Service Notes 548
Crankcase Ventilation 6
Fuel Pump Service 104
L.P.G. Carburetion 109

SPECIFICATIONS

Alternator & Regulator 529
Carburetor Adjustment 548
Crankshaft & Bearing 529
Distributor 531
Engine Tightening Torque 528
Generator & Regulator 530
Piston, Pin & Ring 529
Starting Motor 528
Tune Up 526
Valve 526
Wheel Alignment 532

STEERING GEARS 562

TRANSFER CASES 242

TRANSMISSIONS

Clark 110
Dodge 553
Fuller 122
Gearshift, Adjust 555
Loadflite 300
Loadflite Linkage, Adjust 556
Loadflite Trans., Replace 556
New Process 135
Spicer 141
Torqmatic 281
Torqmatic Linkage, Adjust 558
Warner 164

TUNE UP SERVICE 2

MODEL INDEX & ENGINE APPLICATION

ENGINE IDENTIFICATION—Dodge engines can be identified by the engine serial number located on a machined pad on the cylinder block. The serial number prefix denotes the series letter, followed by engine model, followed by serial number. For example, a 1959 Model M8-400 with a V8-318 engine would read M8-318-000000. However, for 1960 and later engines (except 8-318), the last digit of the engine model is ommitted. Thus, the engine number prefixes for 1960 and later engines are as follows:

Year	Prefix	Engine	Year	Prefix	Engine	Year	Prefix	Engine	Year	Prefix	Engine
1960	TP-23	6-230	1961	TR-17	6-170		TR-36	8-361		TS-25	6-251
	TP-25	6-251		TR-22	6-225		TR-41	8-413		TS-26	6-265
	TP-26	6-265		TR-23	6-230	1962-63	TS-17	6-170		TS-318	8-318
	TP-36	8-361		TR-25	6-251		TS-22	6-225		TS-36	8-361
	TP-41	8-413		TR-26	6-265		TS-23	6-230		TS-41	8-413

B-3 & B-4 SERIES

Model	Year	Engine Make	Std. Engine Model	Crankcase Refill Capacity, Qts.	Cooling System Capacity, Qts.
B, C	1952-53	Own	6-218	5	17½
D, PW	1952-53	Own	6-230	5	17½
DU, EU	1952-53	Own	6-230	5	17½
F,FS,G,GA	1952-53	Own	6-237	5	19¼
FS	1952-53	Own	6-251	5	19¼
GM, GS, GMA	1952-53	Own	6-237	5	19¼
H, HA	1952-53	Own	6-237	5	19¼
HH, HHA	1952-53	Own	6-237	5	19¼
HS	1952-53	Own	6-251	5	19¼
HHM, HHMA	1952-53	Own	6-237	5	19¼
HHS	1952-53	Own	6-237	5	19¼
J, JA, JS	1952-53	Own	6-251	5	21½
JM, JMA	1952-53	Own	6-251	5	21½
K,KA,KMA	1952-53	Own	6-251	5	21½
R, RA, RS	1952-53	Own	6-306	8	30¼
T,TA,V,VA	1952-53	Own	6-331	8	30¼
Y, YA	1952-53	Own	6-377	8	34

C-1 SERIES

Model	Year	Engine Make	Std. Engine Model	Crankcase Refill Capacity, Qts.	Cooling System Capacity, Qts.
B6, C6	1954	Own	①	5	15½
B8, C8	1954	Own	8-241	5	19
D6, DL6	1954	Own	6-230	5	15½
D8, DL8	1954	Own	8-241	5	20
DU6,DUL6	1954	Own	6-230	5	17
EU6, EUL6	1954	Own	6-230	5	17
PW6	1954	Own	6-230	5	17
F6,FL6,FS6	1954	Own	6-230	5	15½
G6, GA6	1954	Own	6-251	5	21½
G8, GA8	1954	Own	8-241	5	21
H6, HL6	1954	Own	6-251	5	21½
H8, HL8	1954	Own	8-241	5	21
HA6, HAL6	1954	Own	6-251	5	21½
HA8, HAL8	1954	Own	8-241	5	21
HM6, HML6	1954	Own	6-251	5	21½
HMA6, HS6	1954	Own	6-251	5	21½
HMAL6	1954	Own	6-251	5	21½
J6, JL6	1954	Own	6-265	5	20
J8, JL8	1954	Own	8-241	5	23
JA6, JAL6	1954	Own	6-265	5	20
JA8, JAL8	1954	Own	8-241	5	23
JM6, JML6	1954	Own	6-265	5	20
JMA6, JS6	1954	Own	6-265	5	20
JMAL6	1954	Own	6-265	5	20
K6, KL6	1954	Own	6-265	5	20
K8, KL8	1954	Own	8-241	5	23
KA6, KAL6	1954	Own	6-265	5	20
KA8, KAL8	1954	Own	8-241	5	23
KMA6	1954	Own	6-265	5	20
KMAL6	1954	Own	6-265	5	20
R8, RL8	1954	Own	8-331	8	29
RA8, RAL8	1954	Own	8-331	8	29
RS8	1954	Own	8-331	8	29
T8, TL8	1954	Own	8-331	8	29
TA8, TAL8	1954	Own	8-331	8	29
V8, VL8	1954	Own	8-331	8	29
VA8, VAL8	1954	Own	8-331	8	29
Y6, YL6	1954	Own	6-413	8	34
YA6, YAL6	1954	Own	6-413	8	34
YX6, YXL6	1954	Own	6-413	8	34

①—Early 6-218 engine, late 6-230.

C-3 SERIES

Model	Year	Engine Make	Std. Engine Model	Crankcase Refill Capacity, Qts.	Cooling System Capacity, Qts.
B6, C6	1955-56	Own	6-230	5	15
D6	1955-56	Own	6-230	5	16
DU6, EU6	1955-56	Own	6-230	5	17
F6, FS6	1955-56	Own	6-230	5	15½
G6, H6	1955-56	Own	6-251	5	18
HS6, HM6	1955-56	Own	6-251	5	18
J6, JS6	1955-56	Own	6-265	5	20
JM6	1955-56	Own	6-265	5	20
K6, KA6, KS6	1955-56	Own	6-265	5	20
Y6, YX6	1955-56	Own	6-413	8	34
B8, C8	1955-56	Own	8-259	5	19
D8, F8	1955-56	Own	8-259	5	20
FS8	1955-56	Own	8-259	5	20
G8, H8	1955-56	Own	8-259	5	21
HS8	1955-56	Own	8-259	5	21
J8, JS8	1955-56	Own	8-270	5	23
K8, KA8, KS8	1955-56	Own	8-270	5	23
R8, RS8	1955-56	Own	8-331	8	29
T8, V8	1955-56	Own	8-331	8	29

K SERIES

Model	Year	Engine Make	Std. Engine Model	Crankcase Refill Capacity, Qts.	Cooling System Capacity, Qts.
K6-D100	1957	Own	6-230	5	14½
K8-D100	1957	Own	8-315	5	18
K6-D200	1957	Own	6-230	5	15

Model	Year	Engine Make	Std. Engine Model	Crankcase Refill Capacity, Qts.	Cooling System Capacity, Qts.
K8-D200	1957	Own	8–315	5	18
K6-D300	1957	Own	6–230	5	15
K8-D300	1957	Own	8–315	5	18
K6-P300	1957	Own	6–230	5	15
K8-P300	1957	Own	8–331	5	18
K6-W300	1957	Own	6–230	5	17
K6-D400	1957	Own	6–251	5	15½
K8-D400	1957	Own	8–315	5	20½
K6-P400	1957	Own	6–230	5	15½
K8-P400	1957	Own	8–331	5	17½
K6-S400	1957	Own	6–251	5	19¼
K8-S400	1957	Own	8–315	5	20½
K8-C500	1957	Own	8–331	5	20½
K6-D500	1957	Own	6–251	5	15½
K8-D500	1957	Own	8–315	5	20½
K8-S500	1957	Own	8–315	5	20½
K6-W500	1957	Own	6–265	5	22½
K8-W500	1957	Own	8–331	5	22½
K8-C600	1957	Own	8–331	5	23
K6-D600	1957	Own	6–265	5	20
K8-D600	1957	Own	8–315	5	23
K6-S600	1957	Own	6–265	5	20
K8-S600	1957	Own	8–315	5	23
K8-C700	1957	Own	8–331	5	29
K8-C700	1957	Own	8–354	5	29
K8-D700	1957	Own	8–331	5	29
K8-D700	1957	Own	8–354	5	29
K8-S700	1957	Own	8–331	5	29
K8-T700	1957	Own	8–331	5	29
K8-T700	1957	Own	8–354	5	29
K8-D800	1957	Own	8–331	5	29
K8-D800	1957	Own	8–354	5	29
K8-T800	1957	Own	8–331	5	29
K8-T800	1957	Own	8–354	5	29
K8-D900	1957	Own	8–354	5	29
K8-T900	1957	Own	8–354	5	29

L SERIES

Conventional Models

L6-D100	1958	Own	6–230	5	12
L6-D200	1958	Own	6–230	5	12
L6-D300	1958	Own	6–230	5	12
L6-D400	1958	Own	6–251	5	18
L6-D500	1958	Own	6–251	5	18
L6-D600	1958	Own	6–265	5	19
L8-D100	1958	Own	8–315	5	19
L8-D200	1958	Own	8–315	5	19
L8-D300	1958	Own	8–315	5	19
L8-D400	1958	Own	8–315	5	25
L8-D500	1958	Own	8–315	5	25
L8-D600	1958	Own	8–315	5	25
L8-D700	1958	Own	8–354	8	25
L8-D800	1958	Own	8–354	8	26
L8-D900	1958	Own	8–354	8	26

Cab-Over-Engine Models

L8-C500	1958	Own	8–315	5	25
L8-C600	1958	Own	8–315	5	25
L8-C700	1958	Own	8–354	8	25

Forward Control Models

L6-P300	1958	Own	6–230	5	12
L6-P400	1958	Own	6–230	5	12
L8-P300	1958	Own	8–315	5	19
L8-P400	1958	Own	8–315	5	19

School Bus Models

L6-S400	1958	Own	6–251	5	18
L6-S500	1958	Own	6–251	5	18
L6-S600	1958	Own	6–265	5	19
L8-S400	1958	Own	8–315	5	25
L8-S500	1958	Own	8–315	5	25
L8-S600	1958	Own	8–315	5	25

4x4 Models

L6-W100	1958	Own	6–230	5	12
L6-W200	1958	Own	6–230	5	12
L6-W300	1958	Own	6–251	5	12
L6-W300M	1958	Own	6–230	5	17
L6-W500	1958	Own	6–265	5	19
L8-W100	1958	Own	8–315	5	19
L8-W200	1958	Own	8–315	5	19
L8-W300	1958	Own	8–315	5	19
L8-W500	1958	Own	8–315	5	25

6x4 Models

L8-T700	1958	Own	8–354	8	25
L8-T800	1958	Own	8–354	8	26
L8-T900	1958	Own	8–354	8	26

M SERIES

Conventional Models

M6-D100	1959	Own	6–230	5	12
M6-D200	1959	Own	6–230	5	12
M6-D300	1959	Own	6–230	5	12
M6-D400	1959	Own	6–251	5	18
M6-D500	1959	Own	6–251	5	18
M6-D600	1959	Own	6–265	5	19
M8-D100	1959	Own	8–318	5	20
M8-D200	1959	Own	8–318	5	20
M8-D300	1959	Own	8–318	5	20
M8-D400	1959	Own	8–318	5	22
M8-D500	1959	Own	8–318	5	22
M8-D600	1959	Own	8–315	5	22
M8-D700	1959	Own	8–354	7	25
M8-D800	1959	Own	8–354	7	26
M8-D900	1959	Own	8–354	7	26

Cab-Over-Engine Models

M8-C500	1959	Own	8–318	5	22
M8-C600	1959	Own	8–315	5	22
M8-C700	1959	Own	8–354	7	25

continued

MODEL INDEX & ENGINE APPLICATION

Model	Year	Engine Make	Std. Engine Model	Crankcase Refill Capacity, Qts.	Cooling System Capacity, Qts.
Forward Control Models					
M6-P300	1959	Own	6–230	5	12
M6-P400	1959	Own	6–230	5	12
M8-P300	1959	Own	8–318	5	20
M8-P400	1959	Own	8–318	5	20
School Bus Models					
M6-S400	1959	Own	6–251	5	18
M6-S500	1959	Own	6–251	5	18
M6-S600	1959	Own	6–265	5	19
M8-S400	1959	Own	8–318	5	22
M8-S500	1959	Own	8–318	5	22
M8-S600	1959	Own	8–315	5	22
M8-S700	1959	Own	8–354	7	25
4x4 Models					
M6-W100	1959	Own	6–230	5	12
M6-W200	1959	Own	6–230	5	12
M6-W300	1959	Own	6–251	5	12
M6-W300M	1959	Own	6–230	5	17
M6-W500	1959	Own	6–265	5	19
M8-W100	1959	Own	8–318	5	20
M8-W200	1959	Own	8–318	5	20
M8-W300	1959	Own	8–318	5	20
M8-W500	1959	Own	8–318	5	22
6x4 Models					
M8-T700	1959	Own	8–354	7	25
M8-T800	1959	Own	8–354	7	26
M8-T900	1959	Own	8–354	7	26

P SERIES

Model	Year	Engine Make	Std. Engine Model	Crankcase Refill Capacity, Qts.	Cooling System Capacity, Qts.
Conventional Models					
P6-D100	1960	Own	6–230	5	12
P8-D100	1960	Own	8–318	5	20
P6-D200	1960	Own	6–230	5	12
P8-D200	1960	Own	8–318	5	20
P6-D300	1960	Own	6–230	5	12
P8-D300	1960	Own	8–318	5	20
P6-D400	1960	Own	6–251	5	18
P8-D400	1960	Own	8–318	5	22
P6-D500	1960	Own	6–251	5	18
P8-D500	1960	Own	8–318	5	22
P8–D600	1960	Own	8–361	8	22
P8-D700	1960	Own	8–361	8	25
Forward Control Models					
P6-P300	1960	Own	6–230	5	12
P8-P300	1960	Own	8–318	5	20
P6-P400	1960	Own	6–230	5	12
P8-P400	1960	Own	8–318	5	20
School Bus Models					
P6-S400	1960	Own	6–251	5	18
P8-S400	1960	Own	8–318	5	22
P6-S500	1960	Own	6–251	5	18
P8-S500	1960	Own	8–318	5	22
P8-S600	1960	Own	8–318	5	22
4 x 4 Models					
P6-W100	1960	Own	6–230	5	12
P8-W100	1960	Own	8–318	5	20
P6-W200	1960	Own	6–230	5	12
P8-W200	1960	Own	8–318	5	20
P6-W300	1960	Own	6–251	5	18
P8-W300	1960	Own	8–318	5	20
P6-WM300	1960	Own	6–230	5	17
P6-W500	1960	Own	6–265	5	19
P8-W500	1960	Own	8–318	5	22
Low Cab Forward Models 4 x 2					
P8-C500	1960	Own	8–318	5	22
P8-C600	1960	Own	8–361	8	22
P8-C700	1960	Own	8–361	8	25
P8-C800	1960	Own	8–361	8	25
P8-C900	1960	Own	8–413	8	25
P8-C1000	1960	Own	8–413	8	25
Low Cab Forward Models 6 x 4					
P8-CT700	1960	Own	8–361	8	25
P8-CT800	1960	Own	8–361	8	25
P8-CT900	1960	Own	8–413	8	25

R SERIES

Model	Year	Engine Make	Std. Engine Model	Crankcase Refill Capacity, Qts.	Cooling System Capacity, Qts.
Conventional Models					
R6-D100	1961	Own	①	4	13
R8-D100	1961	Own	V8-318	5	20
R6-D200	1961	Own	①	4	13
R8-D200	1961	Own	V8-318	5	20
R6-D300	1961	Own	①	4	13
R8-D300	1961	Own	V8-318	5	20
R6-D400	1961	Own	6–251	5	20
R8-D400	1961	Own	V8-318	5	24
R6-D500	1961	Own	6–251	5	20
R8-D500	1961	Own	V8-318	5	24
R8-D600	1961	Own	V8-361	8	25
R8-D700	1961	Own	V8-361	8	25

①—Either 6–170 or 6–225.

Model	Year	Engine Make	Std. Engine Model	Crankcase Refill Capacity, Qts.	Cooling System Capacity, Qts.
Forward Control Models					
R6-P200	1961	Own	①	4	13
R6-P300	1961	Own	①	4	13
R6-P400	1961	Own	①	4	13

①—Either 6–170 or 6–225.

MODEL INDEX & ENGINE APPLICATION

Model	Year	Engine Make	Engine Model	Crankcase Refill Capacity, Qts.	Cooling System Capacity, Qts.
School Bus Models					
R6-S400	1961	Own	6–251	5	20
R8-S400	1961	Own	V8-318	5	24
R6-S500	1961	Own	6–251	5	20
R8-S500	1961	Own	V8-318	5	24
R8-S600	1961	Own	V8-318	5	24
4 x 4 Models					
R6-W100	1961	Own	①	4	13
R8-W100	1961	Own	V8-318	5	20
R6-W200	1961	Own	①	4	13
R8-W200	1961	Own	V8-318	5	20
R6-W300	1961	Own	6–251	5	20
R8-W300	1961	Own	V8-318	5	20
R6-WM300	1961	Own	6–251	5	23
R6-W500	1961	Own	6–251	5	20
R8-W500	1961	Own	V8-318	5	24

①—Either 6–170 or 6–225.

Low Cab Forward 4 x 2					
R8-C500	1961	Own	V8-318	5	24
R8-C600	1961	Own	V8-361	8	25
R8-C700	1961	Own	V8-361	8	25
R8-C800	1961	Own	V8-361	8	25
R8-C900	1961	Own	V8-413	8	25
R8-C1000	1961	Own	V8-413	8	25
Low Cab Forward 6 x 4					
R8-CT700	1961	Own	V8-361	8	25
R8-CT800	1961	Own	V8-361	8	25
R8-CT900	1961	Own	V8-413	8	25

S SERIES

Model	Year	Engine Make	Engine Model	Crankcase Refill Capacity, Qts.	Cooling System Capacity, Qts.
CONVENTIONAL MODELS					
S6-D100	1962–63	Own	6–225	5	13
S8-D100	1962–63	Own	V8-318	5	20
S6-D200	1962–63	Own	6–225	5	13
S8-D200	1962–63	Own	V8-318	5	20
S6-D300	1962–63	Own	6–225	5	13
S8-D300	1962–63	Own	V8-318	5	20
S6-D400	1962	Own	6-251	5	20
S6–D400	1963	Own	6–225	5	13
S8-D400	1962–63	Own	V8-318	5	24
S6-D500	1962	Own	6-251	5	20
S6–D500	1963	Own	6–225	5	13
S8-D500	1962–63	Own	V8-318	5	24
S8-D600	1962–63	Own	V8-318	5	24
S8-D700	1962–63	Own	V8-361	8	25
FORWARD CONTROL MODELS					
S6-P200	1962–63	Own	6–225	5	13
S6-P300	1962–63	Own	6–225	5	13
S6-P400	1962	Own	6-251	5	20
S6–P400	1963	Own	6–225	5	13
SCHOOL BUS MODELS					
S6-S400	1962	Own	6-251	5	20
S6–S400	1963	Own	6–225	5	13
S8-S400	1962–63	Own	V8-318	5	24
S6-S500	1962	Own	6-251	5	20
S6–S500	1963	Own	6–225	5	13
S8-S500	1962–63	Own	V8-318	5	24
S8-S600	1962–63	Own	V8-318	5	24
4 x 4 MODELS					
S6-W100	1962–63	Own	6–225	5	13
S8-W100	1962–63	Own	V8-318	5	20
S6-W200	1962–63	Own	6–225	5	13
S8-W200	1962–63	Own	V8-318	5	20
S6-W300	1962	Own	6-251	5	20
S6–W300	1963	Own	6–225	5	13
S8-W300	1962–63	Own	V8-318	5	20
S6-WM300	1962–63	Own	6-251	5	23
S6-W500	1962	Own	6-251	5	20
S6–W500	1963	Own	6–225	5	13
S8-W500	1962–63	Own	V8-318	5	24
LOW CAB FORWARD 4 x 2					
S8-C500	1962–63	Own	V8-318	5	24
S8-C600	1962–63	Own	V8-361	8	25
S8-C700	1962–63	Own	V8-361	8	25
S8-C800	1962–63	Own	V8-361	8	25
S8-C900	1962–63	Own	V8-413	8	25
S8-C1000	1962–63	Own	V8-413	8	25
LOW CAB FORWARD 6 x 4					
S8-CT700	1962	Own	V8-361	8	25
S8-CT800	1962–63	Own	V8-361	8	25
S8-CT900	1962–63	Own	V8-413	8	25

GENERAL ENGINE SPECIFICATIONS

Year	Engine Model	No. Cyls. & Valve Location	Bore & Stroke	Piston Displacement, Cubic Inch	Compression Ratio ②	Maximum Brake H. P. @ R. P. M. ②	Maximum Torque, Lb. Ft. @ R. P. M. ②	Normal Oil Pressure, Lbs.
1961–63	6–170	6 In Head	3.4062 x 3.125	170	8.2	101 @ 4000	145 @ 1600	40–65
1952–54	6–218	6 In Block	3¼ x 4⅜	218	7.10	100 @ 3600	177 @ 1600	45–50
1961–63	6–225	6 In Head	3.4062 x 4.125	225	8.2	140 @ 3900	215 @ 1600	40–65
1952–60	6–230	6 In Block	3.250 x 4.625	230	7.90	109 @ 3600①	202 @ 1600	40
1952	6–237	6 In Block	3 7/16 x 4¼	237	6.60	109 @ 3600	192 @ 1200	40
1954	8–241	8 In Head	3 7/16 x 3¼	241	7.50	133 @ 3800	220 @ 1200	55–60
1952–63	6–251	6 In Block	3 7/16 x 4½	251	7.00	115 @ 3600①	216 @ 1600	40
1955–56	8–259	8 In Head	3 9/16 x 3¼	259	7.60	134 @ 4400	243 @ 2400	55–60
1953–60	6–265	6 In Block	3.437 x 4.766	265	7.00	120 @ 3600①	228 @ 1600	40
1955–56	8–270	8 In Head	3.63 x 3.259	270	7.60	142 @ 4400	256 @ 2400	55–60
1952–53	6–306	6 In Block	3¾ x 4⅝	306	6.46	122 @ 3200	245 @ 1200	45–50
1957–59	8–315	8 In Head	3⅝ x 3⅘	315	7.60	197 @ 4400	284 @ 2400	55–60
1959–63	8–318	8 In Head	3.906 x 3.312	318	8.25	205 @ 4400	319	40–50
1952–53	6–331	6 In Block	3¾ x 5	331	6.50	128 @ 3000	270 @ 1200	45–50
1952–57	8–331	8 In Head	3.81 x 3.625	331	7.50	201 @ 3900	311 @ 2400	55–60
1957–59	8–354	8 In Head	3 15/16 x 3⅝	354	7.50	218 @ 3900	319 @ 2400	50–60
1960–63	8–361	8 In Head	4.125 x 3.375	361	7.50	③		40–50
1952	6–377	6 In Block	4 x 5	377	6.50	154 @ 3000	330 @ 1200	45–50
1953–56	6–413	6 In Block	4 1/16 x 5 5/16	413	6.50	171 @ 3200	343 @ 1500	45–50
1960–63	8–413	8 In Head	4.188 x 3.750	413	7.50	④		40–50

①—Net horsepower
②—Latest production.
③—Three engines rated at 178, 194 and 204 H. P.
④—Two engines rated at 217 and 228 H. P.

TUNE UP & VALVE SPECIFICATIONS

Year	Engine or Truck Model	Firing Order	Spark Plugs		Ignition Timing		Valve Face Angle Degrees	Valve Clearance H-Hot C-Cold		Valve Spring Pressure Lb. @ Inch Length
			Type	Gap	Timing Mark BTC	Location		Intake	Exhaust	
1952–53	B-3-B, C, D	153624	AR80	.035	TDC	Damper	45	.010H	.014H	110 @ 1⅜
	B-3-PW	153624	AR80	.035	2° ATDC	Damper	45	.010H	.014H	110 @ 1⅜
	B-3-DU, EU	153624	AR80	.035	TDC	Damper	45	.010H	.014H	110 @ 1⅜
	B-3-F Series	153624	AR80	.035	2° ATDC	Damper	45	.010H	.014H	110 @ 1⅜
1952–53	B-3-G Series	153624	AR80	.035	2° ATDC	Damper	45	.010H	.014H	110 @ 1⅜
	B-3-H Series	153624	AR80	.035	2° ATDC	Damper	45	.010H	.018H	110 @ 1⅜
	B-3-J Series	153624	AR80	.035	2° ATDC	Damper	45	.010H	.018H	110 @ 1⅜
	B-3-K Series	153624	AR80	.035	2° ATDC	Damper	45	.010H	.018H	110 @ 1⅜
	B-3-R, RA	153624	AR51	.035	1° ATDC	Damper	45	.010H	.018H	108 @ 1⅝
	B-3-T, TA	153624	AR51	.035	TDC	Damper	45	.010H	.018H	108 @ 1⅝
	B-3-V, VA	153624	AR51	.035	TDC	Damper	45	.010H	.018H	108 @ 1⅝
	B-3-Y, YA	153624	AR51	.035	2° ATDC	Damper	45	.010H	.018H	108 @ 1⅝
1954	C-1-B6, C6	153624	AR80	.035	TDC	Damper	45	.010H	.014H	110 @ 1⅜
	C-1-B8, C8	18436572①	AR51	.035	4°	Damper	45	None	None	53 @ 1 11/16
	C-1-DU6, EU6	153624	AR80	.035	2°	Damper	45	.010H	.014H	110 @ 1⅜
	C-1-D6, F6, PW6	153624	AR80	.035	2°	Damper	45	.010H	.014H	110 @ 1⅜
	C-1-D8, DL8	18436572①	AR51	.035	4°	Damper	45	None	None	53 @ 1 11/16
	C-1-G6	153624	AR80	.035	1°	Damper	45	.010H	.014H	110 @ 1⅜
	C-1-H6 Series	153624	AR80	.035	1°	Damper	45	.010H	.014H	110 @ 1⅜
	C-1-J6 Series	153624	AR80	.035	1°	Damper	45	.010H	.018H	110 @ 1⅜
	C-1-K6 Series	153624	AR80	.035	1°	Damper	45	.010H	.018H	110 @ 1⅜
	C-1-G8, H8, J8, K8	18436572①	AR51	.035	4°	Damper	45	None	None	⑭
	C-1-R8, T8, V8	18436572①	AGR51	.035	4°	Damper	45	None	None	⑭
	C-1-Y6, YX6	153624	AR51	.035	TDC	Damper	45	None	None	125 @ 1⅜

TUNE UP & VALVE SPECIFICATIONS continued

Year	Engine or Truck Model	Firing Order	Spark Plugs		Ignition Timing		Valve Face Angle Degrees	Valve Clearance H-Hot C-Cold		Valve Spring Pressure Lb. @ Inch Length
			Type	Gap	Timing Mark BTC	Location		Intake	Exhaust	
1955–56	6–230	153624	AR80	.035	2°	Damper	45	.010H	.014H	110 @ 1 3/8
	6–251	153624	AR80	.035	1°	Damper	45	.010H	.014H	110 @ 1 3/8
	6–265	153624	AR80	.035	1°	Damper	45	.010H	.018H	110 @ 1 3/8
	6–413	153624	AR51	.035		Damper	45	Zero	Zero	125 @ 1 19/32
	8–259	18436572①	AR51	.035	4°	Damper	45	Zero	Zero	140 @ 1 1/32
	8–270	18436572①	AR51	.035	4°	Damper	45	Zero	Zero	⑨
	8–331	18436572①	AGR51	.035	4°	Damper	45	Zero	Zero	⑨
1957	6–230	153624	AR51	.035		Damper	45	.010H	.014H	110 @ 1 3/8
	6–251	153624	AR51	.035	2°	Damper	45	.010H	.014H	110 @ 1 3/8
	6–265	153624	AR51	.035	2°	Damper	45	.010H	.018H	110 @ 1 3/8
	8–315	18436572①	AR42	.035	6°	Damper	45	Zero	Zero	⑦
	8–331	18436572①	AGR42	.035	4°	Damper	45	Zero	Zero	⑧
	8–354	18436572①	AGR41	.035	4°	Damper	45	Zero	Zero	⑧
1958	6–230	153624	AR51	.035	2°	Damper	45	.010H	.014H	110 @ 1 3/8
	6–251	153624	AR51	.035	2°	Damper	45	.010H	.014H	110 @ 1 3/8
	6–265	153624	AR51	.035	2°	Damper	45	.010H	.018H	110 @ 1 3/8
	8–315	18436572①	AGR41	.035	6°	Damper	45	Zero	Zero	⑦
	8–354	18436572①	AGR41	.035	4°	Damper	45	Zero	Zero	⑧
1959	6–230	153624	AR51	.035	2 1/2°	Damper	45	.010H	.014H	110 @ 1 3/8
	6–251	153624	AR51	.035	2 1/2°	Damper	45	.010H	.014H	110 @ 1 3/8
	6–265	153624	AR51	.035	2 1/2°	Damper	45	.010H	.018H	110 @ 1 3/8
	8–318②	18436572①	AR31	.035	10°	Damper	45	.010H	.018H	165 @ 1.31
	8–318③	18436572①	AR31	.035	10°	Damper	45	Zero	Zero	175 @ 1.31
	8–315	18436572①	AR41	.035	6°	Damper	45	Zero	Zero	⑤
	8–354	18436572①	AGR31	.035	4°	Damper	45	Zero	Zero	⑥
1960	6–230	153624	A5	.035	2 1/2°	Damper	45	.010H	.014H	110 @ 1 3/8
	6–251	153624	A5	.035	5°	Damper	45	.010H	.014H	110 @ 1 3/8
	6–265	153624	A5	.035	5°	Damper	45	.010H	.018H	110 @ 1 3/8
	8–318②	18436572①	AT42	.035	10°	Damper	45	.010H	.018H	165 @ 1.31
	8–318②	18436572①	AT42	.035	10°	Damper	45	Zero	Zero	175 @ 1.31
	8–361	18436572①	AG3	.035	10°	Damper	45	Zero	Zero	④
	8–413	18436572①	AG3	.035	5°	Damper	45	Zero	Zero	④
1961–62	6–170	153624	AG4	.035	2 1/2°	Damper	45	.012H	.024H	80 @ 1 11/16
	6–225	153624	AG4	.035	2 1/2°	Damper	45	.012H	.024H	80 @ 1 11/16
	6–251	153624	A5	.035	5°	Damper	45	.010H	.014H⑩	110 @ 1 3/8
	V8-318	18436572①	AT42	.035	10°	Damper	45	.010H⑬	.018H	165 @ 1 5/16
	V8-361	18436572①	AG4	.035	12°	Damper	45	Zero	Zero	④
	V8-413	18436572①	AG4	.035	5°	Damper	45	Zero	Zero	④
1963	6–170	153624	N6	.035	2 1/2°	Damper	45⑪	.012H	.024H	50 @ 1 11/16
	6–225–1	153624	N6	.035	2 1/2°	Damper	45⑪	.012H	.024H	50 @ 1 11/16
	6–225–2	153624	N6	.035	2 1/2°	Damper	45⑪	.012H	.024H	⑮
	6–251	153624	J7	.035	5°	Damper	45⑪	.010H	.014H⑩	⑯
	V8–318	18436572①	J10Y	.035	10°	Damper	45	.010H⑬	.018H	50 @ 1 11/16⑰
	V8–361	18436572①	N6	.035	⑫	Damper	45	Zero	Zero	⑱
	V8–413	18436572①	N6	.035	5°	Damper	45	Zero	Zero	⑱

①—Cylinder numbering (front to rear): Left bank 1–3–5–7, right bank 2–4–6–8.
②—Mechanical valve lifters.
③—Hydraulic lifters.
④—Intake 180 @ 1.47″, exhaust inner 49 @ 1.17″, exhaust outer 115 @ 1.37″.
⑤—Intake 78 @ 1 11/16″, exhaust 80 @ 1 35/64″.
⑥—Intake 160 @ 1 5/16″, exhaust inner 40 @ 1 29/64″, exhaust outer 122 @ 1 37/64″.
⑦—For 2″ free length spring 165 @ 1 5/16″, for 1 13/16″ free length spring 140 @ 1 13/64″.
⑧—Inner 43 @ 1 3/16″, outer 126 @ 1 13/64″.
⑨—Outer 126 @ 1 13/64″, inner intake 43 @ 1 3/16″, inner exhaust 43 @ 1 5/64″.
⑩—W500 model .018″ Hot.
⑪—Exhaust valve face angle–47°.
⑫—With velocity governor 10°, all others 5°.
⑬—For 1962–intake .012H, exhaust .022H.
⑭—Outer exhaust 126 @ 1 13/64″, outer intake 55 @ 1 11/16″
⑮—Intake 50 @ 1 11/16″, exhaust 85 @ 1 9/16″.
⑯—Intake 40 @ 1 3/4″, exhaust 40 @ 1 19/32″.
⑰—Outer spring.
⑱—Intake 80 @ 1 55/64″, exhaust 57 @ 1 47/64″.

ENGINE TIGHTENING SPECIFICATIONS★

★Torque specifications are for clean and lightly lubricated threads only. Dry or dirty threads produce increased friction which prevents accurate measurement of tightness.

Engine	Spark Plugs Ft. Lbs.	Cylinder Head Bolts Ft. Lbs.	Intake Manifold Ft. Lbs.	Exhaust Manifold Ft. Lbs.	Rocker Arm Shaft Bracket Ft. Lbs.	Rocker Arm Cover Ft. Lbs.	Connecting Rod Cap Bolts Ft. Lbs.	Main Bearing Cap Bolts Ft. Lbs.	Flywheel to Crankshaft Ft. Lbs.	Vibration Damper or Pulley Ft. Lbs.
6-170	30	65	③	10	30	⑤	45	85	55	④
6-218	30	70	20	20	None	None	45	85	60	
6-225	30	65	③	10	30	⑤	45	85	55	④
6-230	30	70	20	20	None	None	45	85	60	
6-237	30	70			None	None	45	85	60	135
8-241	30	85	30	25	85	30 In. Lbs.	45	85	60	135
6-251	30	65	20	20	None	None	45	85	60	135
8-259	30	85	30	25	30	30 In. Lbs.	45	85	60	135
6-265	30	70	20	20	None	None	45	85	60	
8-270	30	85	30	25	85	30 In. Lbs.	45	85	60	135
6-306	30	60	20		None	None	70	85	60	135
8-315	30	85	30	25	②	30 In. Lbs.	45	85	60	135
8-318	30	85	30	25	30	36 In. Lbs.	45	85	60	135
6-331	30	60	30		None	None	70	85	60	135
8-331	30	85	30	25	85	30 In. Lbs.	45	85	60	135
8-354	30	85	30	25	85	30 In. Lbs.	45	85	60	135
8-361	30	70	40	30	30	40 In. Lbs.	45	85	60	135
6-377	30	60	30		None	None	75	85	60	135
6-413	30	①	30	15	None	None	75	85	60	135
8-413	30	70	40	30	30	40 In. Lbs.	45	85	60	135

①—Stud nuts 60 ft. lbs., bolts 70 ft. lbs.
②—Single rocker shaft 30 ft. lbs., double rocket shaft 85 ft. lbs.
③—200 In. Lbs.
④—Press fit.
⑤—40 In. Lbs.

STARTING MOTOR SPECIFICATIONS

Unit Part No. ①	Rotation ②	Brush Spring Tension, Oz.	No Load Test			Torque Test		
			Amperes	Volts	R. P. M.	Amperes	Volts	Torque Lb. Ft.
1889100	C	32-48	78	11	3800	350	4	8.5
2095150	C	32-48	85	11	1950	475	4	24.0
2095753	C	32-48	78	11	3800	350	4	8.5
MCH-6106	C	42-53	65	5	4300	335	2	6
MCH-6106F	C	42-53	65	5	4300	335	2	6
MCH-6205	C	42-53	65	5	4300	335	2	6
MCH-6206	C	42-53	65	5	4300	335	2	6
MCL-6102	C	42-53	65	5	4900	410	2	8
MCL-6103	C	42-53	65	5	4900	410	2	8
MCL-6110	C	42-53	65	5	4900	410	2	8
MCL-6111	C	42-53	65	5	4900	410	2	8
MCL-6124	C	42-53	65	5	4900	410	2	8
MCL-6126	C	42-53	65	5	4900	410	2	8
MCT-6107	C	42-53	35	10	4800	175	4	6.5
MDL-6003	C	34-43	60	11	3400	225	4	6
MDL-6004	C	34-43	60	11	3400	225	4	6
MDL-6005	C	34-43	60	11	3400	225	4	6
MDM-6002	C	34-43	60	11	3400	225	4	6
MDM-6003	C	34-43	60	11	3400	225	4	6
MDT-7101	C	32-48	80	11	3800 Min.	350	4	8.5
MDU-6003	C	32-48	50	11	5500	355	4	9
MDU-7013	C	32-48	50	11	5500 Min.	280	4	6.2

①—Stamped on plate riveted to housing.
②—As viewed from drive end. C—Clockwise. CC—Counterclockwise.

PISTON, PIN, RING, CRANKSHAFT & BEARING SPECIFICATIONS

Year	Engine Model ②	Wristpin Diameter	Piston Clearance, Inch ①	Ring End Gap In. (Minimum)		Crank Pin Diameter, Inch	Rod Bearing Clearance, In.	Main Bearing Journal Diameter, In.	Main Bearing Clearance, Inch	End Thrust On Bearing No.	Shaft End Play
				Comp.	Oil						
1961–63	6–170	.9008	.001	.010	.010	2.1865–2.1875	.0005–.0015	2.7495–2.7505	.0005–.0015	3	.004–.008
1952–54	6–218	.8592	.002	.010	.010	2.0615–2.0625	.0005–.0015	2.499–2.500	.0005–.0015	Rear	.002–.007
1961–63	6–225	.9008	.001	.010	.010	2.1865–2.1875	.0005–.0015	2.7495–2.7505	.0005–.0015	3	.004–.008
1952–60	6–230	.8592	.002	.010	.010	2.0615–2.0625	.0005–.0015	2.499–2.500	.0005–.0015	Rear	.002–.007
1952	6–237	.8592	.002	.010	.010	2.124–2.125	.0005–.0015	2.499–2.500	.001–.0015	Rear	.002–.007
1954	8–241	.8592	.0015	.010	.010	1.9365–1.9375	.001–.002	2.374–2.375	.0005–.0015	Center	.002–.007
1952–63	6–251	.8592	.002	.010	.010	2.124–2.125	.0005–.0015	2.499–2.500	.0005–.0015	Rear	.002–.007
1955	8–259	.8592	.0015	.010	.010	1.9365–1.9375	.0005–.0015	2.374–2.375	.0005–.0015	Center	.002–.007
1952–60	6–265	.8592	.002	.010	.010	2.124–2.125	.0005–.0015	2.499–2.500	.0005–.0015	Rear	.002–.007
1955–56	8–270	.8592	.0015	.010	.010	1.9365–1.9375	.001–.002	2.374–2.375	③	Center	.002–.007
1952–53	6–306	1.125	.003	.013	.013	2.3115–2.3125	.002–.003	2.999–3.000	.0015–.0035	Rear	.002–.007
1957–59	8–315	.9217	.0015	.010	.010	2.249–2.250	.001–.002	2.4995–2.5005	.0005–.0015	Center	.002–.007
1959–63	8–318	.9842	.0015	.010	.010	2.124–2.125	.0005–.0025	2.4995–2.5005	.0005–.0015	Center	.002–.007
1952–53	6–331	1.125	.003	.013	.013	2.3115–2.3125	.002–.003	2.999–3.000	.0015–.0035	Rear	.002–.007
1954–57	8–331	.9841	.002	.010	.010	2.249–2.250	.001–.002	2.499–2.500	③	Center	.002–.007
1957–59	8–354	.9841	.0015	.010	.010	2.249–2.250	.001–.002	2.4995–2.5005	.0015–.0025	Center	.002–.007
1960–63	8–361	1.0936	.0015	.013	.013	2.374–2.375	.0005–.0015	2.6245–2.6255	.0005–.0015	Center	.002–.007
1952	6–377	1.125	.003	.013	.013	2.3115–2.3125	.002–.003	2.999–3.000	.0015–.0035	Rear	.002–.007
1953–56	6–413	1.125	.003	.013	.013	④	.0015–.0035	2.999–3.000	.0015–.0035	Rear	.002–.007
1960–63	8–413	1.0936	.0015	.013	.013	2.374–2.375	.0005–.0015	2.7495–2.7505	.0005–.0015	Center	.002–.007

①—Using a ½″ wide feeler gauge, a pull of 6 to 9 lbs. should be required to pull feeler gauge past piston. Pistons removed from above.
②—Engine size—cubic inch displacement and number of cylinders.
③—Rear bearing .002–.003″, all others .0015–.0025″.
④—For T324 engine 2.3115–2.3125″, for T352 engine 2.499–2.500″.

ALTERNATOR AND REGULATOR SPECIFICATIONS

Unit Number	Ground Polarity	Field Coil Draw Amperes ②	Current Output			Operating Voltage			Voltage Regulator Point Cap	Regulator Armature Air Gap
			Engine R.P.M.	Amperes ③	Volts	Engine R.P.M.	Amperes	Voltage @ 117° ①		
2095060	Neg.	2.38–2.75	1250	35	14.6	1250	15	13.5–14.1	.012–.016	.048–.052
2095425	Neg.	2.38–2.75	1250	40	14.6	1250	15	13.5–14.1	.012–.016	.048–.052
2095661	Neg.	2.38–2.75	1250	30	14.6	1250	15	13.5–14.1	.012–.016	.048–.052
2095663	Neg.	2.38–2.75	1250	34	14.6	1250	15	13.5–14.1	.012–.016	.048–.052
2095666	Neg.	2.38–2.75	1250	40	14.6	1250	15	13.5–14.1	.012–.016	.048–.052
2095667	Neg.	2.38–2.75	1250	40	14.6	1250	15	13.5–14.1	.012–.016	.048–.052
2098256	Neg.	2.38–2.75	1250	33.5	15	1250	15	13.5–14.1	.012–.016	.048–.052
2098262	Neg.	2.38–2.75	1250	32.5	15	1250	15	13.5–14.1	.012–.016	.048–.052
2098265	Neg.	2.38–2.75	1250	33.5	15	1250	15	13.5–14.1	.012–.016	.048–.052
2098268	Neg.	2.38–2.75	1250	32.5	15	1250	15	13.5–14.1	.012–.016	.048–.052
2098290	Neg.	2.38–2.75	1250	36.0	15	1250	15	13.5–14.1	.012–.016	.048–.052
2098330	Neg.	2.38–2.75	1250	39.0	15	1250	15	13.5–14.1	.012–.016	.048–.052

①—For each 10° rise in temperature subtract .04 volt; for each 10° drop add .04 volt. Temperature is checked with a thermometer 2 inches from installed voltage regulator cover.
②—Current draw at 12 volts while turning rotor shaft by hand.
③—If output is low, stator or rectifier is shorted.

GENERATOR & REGULATOR SPECIFICATIONS

★To polarize generator, reconnect leads to regulator; then momentarily connect a jumper wire from the "Arm" to the "Bat" terminals of the regulator.

Generator						Regulator					
							Cutout Relay				
Gen. No. ①	Rotation and Ground Polarity ③	Brush Spring Tension, Oz.	Rated Cap. Amps.	Gen. Field Ground Location★	Field Current	Reg. No. ②	Closing Voltage	Arm. Air Gap, In.	Voltage Setting	Current Setting	Current & Voltage Reg. Arm. Air Gap, In.
GGA-6001	C-N	34–41	40	External	1.2–1.3⑤	VBO-4202AC	13.1	.032	14.5	40	.050
GGA-6001M	C-N	34–41	40	External	1.2–1.3⑤	VAT-6201	13.1	.032	14.5	40	.050
GGA-6001R	C-N	34–41	40	External	1.2–1.3⑤	VAT-6201	13.1	.032	14.5	40	.050
GGA-6001V	C-N	34–41	40	External	1.2–1.3⑤	VAT-6201	13.1	.032	14.5	40	.050
GGA-6002G	C-N	34–41	40	External	1.2–1.3⑤	VAT-6201	13.1	.032	14.5	40	.050
GGA-6003A	C-N	34–41	40	External	1.2–1.3⑤	VBO-4202AC	13.1	.032	14.5	40	.050
GGA-6003C	C-N	34–41	40	External	1.2–1.3⑤	VAT-6201	13.1	.032	14.5	40	.050
GGA-6003E	C-N	34–41	40	External	1.2–1.3⑤	VAT-6201	13.1	.032	14.5	40	.050
GGA-6004B	C-N	34–41	40	External	1.2–1.3⑤	VAT-6201	13.1	.032	14.5	40	.050
GJC-7004A	C-N	18–36	30	External	1.2–1.3⑤	VRX-6201A	13.4	.032	14.6	36	.050
GJC-7005A	C-N	18–36	30	External	1.2–1.3⑤	VRX-6201A	13.4	.032	14.6	36	.050
GJC-7012B	C-N	18–36	30	External	1.2–1.3⑤	VRX-6201A	13.4	.032	14.6	36	.050
GJC-7012C	C-N	18–36	30	External	1.2–1.3⑤	VRX-6201A	13.4	.032	14.6	36	.050
GJC-7012D	C-N	18–36	30	External	1.2–1.3⑤	VRX-6201A	13.4	.032	14.6	36	.050
GJC-7012E	C-N	18–36	30	External	1.2–1.3⑤	VRX-6201A	13.4	.032	14.6	36	.050
GGW-6001C	C-P	35–53	45	External	1.4–1.5④	VRP-6004A	6.5	.032	7.2	40	.050
GGW-6001H	C-P	35–53	45	External	1.4–1.5④	VRP-4503B	6.5	.032	7.2	40	.050
GGW-6001J	C-P	35–53	45	External	1.4–1.5④	VRP-6004A	6.5	.032	7.2	40	.050
GGW-6001K	C-P	35–53	45	External	1.4–1.5④	VRP-6004A	6.5	.032	7.2	40	.050
GGW-6001Z	C-P	35–53	45	External	1.3–1.5④	VBE-6201A	6.5	.032	7.2	45	.050
GGW-6002A	C-P	35–53	45	External	1.4–1.5④	VRP-4503B	6.5	.032	7.2	40	.050
GGW-6002C	C-P	35–53	45	External	1.4–1.5④	VRP-6004A	6.5	.032	7.2	40	.050
GGW-6002D	C-P	35–53	45	External	1.3–1.5④	VBE-6201A	6.5	.032	7.2	45	.050
GGW-6002E	C-P	35–53	45	External	1.3–1.5④	VBE-6201A	6.5	.032	7.2	45	.050
GGW-6010A	C-P	35–53	45	External	1.4–1.5④	VBE-6001A	6.5	.032	7.0	45	.050
GGW-6011A	C-P	35–53	45	External	1.4–1.5④	VRP-6004A	6.5	.032	7.2	40	.050
GGW-6012A	C-P	35–53	45	External	1.4–1.5④	VBE-6001A	6.5	.032	7.0	45	.050
GGW-6013A	C-P	35–53	45	External	1.4–1.5④	VBE-6001A	6.5	.032	7.0	45	.050
GHM-6004D	C-N	35–53	30	External	1.2–1.3⑤	VRX-6201A	13.1	.032	14.5	30	.050
GHM-6004E	C-N	35–53	30	External	1.2–1.3⑤	VRX-6201A	13.1	.032	14.5	30	.050
GHM-6004G	C-N	35–53	30	External	1.2–1.3⑤	VRX-6201A	13.1	.032	14.5	30	.050
GHM-6012A	C-N	35–53	30	External	1.2–1.3⑤	VRX-6201A	13.1	.032	14.5	30	.050
GHM-6013A	C-N	35–53	30	External	1.2–1.3⑤	VRX-6201A	13.1	.032	14.5	30	.050
GHM-8005A	C-N	35–53	30	External	1.2–1.3⑤	VRX-6201A	13.1	.032	14.5	30	.050
GJM-7001A	C-N	18–36	35	External	1.4–1.7⑤	VRX-6301A	13.1	.032	14.5	35	.050
GJM-7001B	C-N	18–36	35	External	1.4–1.7⑤	VBO-4202B	13.1	.032	14.5	35	.050
GJM-7001D	C-N	18–36	35	External	1.4–1.7⑤	VBO-4202B	13.1	.032	14.5	35	.050
GJM-7002A	C-N	18–36	35	External	1.4–1.7⑤	VRX-6301A	13.1	.032	14.5	35	.050
GJM-7002B	C-N	18–36	35	External	1.4–1.7⑤	VBO-4202B	13.1	.032	14.5	35	.050
GJM-7002C	C-N	18–36	35	External	1.6–1.7⑤	VBO-4202B	13.1	.032	14.5	35	.050
GJM-7003A	C-N	18–36	35	External	1.4–1.7⑤	VBO-4202B	13.1	.032	14.5	35	.050
GJM-7003B	C-N	18–36	35	External	1.4–1.7⑤	VRX-6301A	13.1	.032	14.5	35	.050
GJM-7003C	C-N	18–36	35	External	1.4–1.7⑤	VRX-6301A	13.1	.032	14.5	35	.050
GJM-7401A	C-N	18–36	35	External	1.4–1.7⑤	VBO-4202BC	13.1	.032	14.5	35	.050
GJM-7401B	C-N	18–36	35	External	1.4–1.7⑤	VBO-4202BC	13.1	.032	14.5	35	.050
GJM-7401D	C-N	18–36	35	External	1.4–1.7⑤	VBO-4202BC	13.1	.032	14.5	35	.050
GJM-7402B	C-N	18–36	35	External	1.4–1.7⑤	VBO-4202BC	13.1	.032	14.5	35	.050
GJM-7402C	C-N	18–36	35	External	1.4–1.7⑤	VBO-4202BC	13.1	.032	14.5	35	.050
GJM-8001A	C-N	18–36	35	External	1.4–1.7⑤	VRX-6301A	13.1	.032	14.5	35	.050
GJM-8201A	C-N	18–36	35	External	1.4–1.7⑤	VBO-4202BC	13.1	.032	14.5	35	.050

①—Stamped on plate riveted to housing.
②—Stamped on regulator base.
③—C—Clockwise. CC—Counterclockwise. P—Positive. N—Negative.
④—At 5 volts.
⑤—At 10 volts.

DISTRIBUTOR SPECIFICATIONS

Unit Part No. ①	Rotation ②	Dwell Angle, Degrees	Breaker Gap, In.	Condenser Capacity, Mfds.	Breaker Arm Spring Tension, Oz.	Centrifugal Advance Deg. @ R.P.M. of Dist.		Vacuum Advance		
						Advance Starts	Full Advance	Inches of Vacuum to Start Plunger Movement	Inches of Vacuum for Full Plunger Travel	Maximum Vacuum Advance, Dist. Degrees
1AT-4012	C	39	.020	.25-.28	17-20	1 @ 450	10 @ 1425	6	15	9
1AT-4101B	C	39	.020	.25-.28	17-20	1 @ 525	8 @ 1350	5⅞	14	8
1AT-4101C	C	39	.020	.25-.28	17-20	1 @ 440	9 @ 1300	5½	14	8
1AY-4002-1	C	39	.020	.25-.28	17-20	1 @ 370	10 @ 1150	None	None	None
1AY-4003-1	C	39	.020	.25-.28	17-20	1 @ 450	10 @ 1425	None	None	None
1AY-4003A-1	C	39	.020	.25-.28	17-20	1 @ 370	10 @ 1150	None	None	None
1AY-4003B-1	C	39	.020	.25-.28	17-20	1 @ 525	8 @ 1350	None	None	None
1AY-4004-1	C	39	.020	.25-.28	17-20	1 @ 370	12 @ 1525	None	None	None
1AY-4004C-1	C	39	.020	.25-.28	17-20	1 @ 365	10 @ 1450	None	None	None
1AY-4006-1	C	39	.020	.25-.28	17-20	1 @ 370	10 @ 1150	None	None	None
1AY-4102-1	C	36-42	.020	.25-.28	17-20	1 @ 460	8½ @ 1800	None	None	None
1AY-4102A-1	C	39	.020	.25-.28	17-20	1 @ 450	8½ @ 1800	None	None	None
1AY-4103-1	C	36-42	.020	.25-.28	17-20	1 @ 370	10 @ 1450	None	None	None
1AY-4104-1	C	39	.020	.25-.28	17-20	1 @ 350	10 @ 1450	None	None	None
1AZ-4003A	C	34	.017	.25-.28	17-20	1 @ 425	11 @ 1625	6	17	11½
1AZ-4003G	C	34	.017	.25-.28	17-20	1 @ 350	16 @ 1650	5¼	8½	4
1BB-4101A-1	C	34	.017	.25-.28	17-20	1 @ 375	17 @ 1500	None	None	None
1BB-4102-1	C	34	.017	.25-.28	17-20	1 @ 525	11 @ 1775	None	None	None
1BB-4103	C	34	.017	.25-.28	17-20	1 @ 375	15 @ 1750	None	None	None
1BB-4103A	C	34	.017	.25-.28	17-20	1 @ 425	12 @ 1750	None	None	None
1BB-4103B	C	34	.017	.25-.28	17-20	1 @ 375	12 @ 1625	None	None	None
1BB-4103C	C	34	.017	.25-.28	17-20	1 @ 375	12 @ 1625	None	None	None
1BB-4104	C	34	.017	.25-.28	17-20	1 @ 425	12 @ 1750	None	None	None
1BM-4003	C	27-32	.017	.25-.28	17-20	1 @ 385	9 @ 650	None	None	None
1BM-4101	C	29-32	.017	.25-.28	17-20	1 @ 350	9 @ 670	None	None	None
1BM-4101A	C	27-32	.017	.25-.28	17-20	1 @ 385	9 @ 650	None	None	None
1BM-4102	C	27-32	.017	.25-.28	17-20	1 @ 385	9 @ 650	None	None	None
1BM-4103	C	27-32	.017	.25-.28	17-20	1 @ 415	11½ @ 2200	None	None	None
1BM-4104	C	29-32	.017	.25-.28	17-20	1 @ 350	14 @ 1650	None	None	None
1BM-5003	C	29-32	.017	.25-.28	17-20	1 @ 350	9 @ 670	None	None	None
1BO-4001A-1	C	26-29	.017	.25-.28	17-20	1 @ 350	14 @ 1650	None	None	None
1BP-4002C	C	29-32	.017	.25-.28	17-20	1 @ 350	8 @ 1900	6.7	14	10½
1BP-4002G	C	27-32	.017	.25-.28	17-20	1 @ 350	11½ @ 1400	7	14	11
1BP-4002J	C	27-32	.017	.25-.28	17-20	2 @ 400	7 @ 570	None	None	None
1BP-4003B	C	27-32	.017	.25-.28	17-20	1 @ 415	11½ @ 2200	7⅛	18	13
1BP-4003K	C	27-32	.017	.25-.28	17-20	1 @ 450	9 @ 2000	6½	12.4	10
1BP-4003R	C	27-32	.017	.25-.28	17-20	1 @ 450	9 @ 2000	7.1	12.4③	14.5③
1BP-4006D	CC	27-32	.017	.25-.28	17-20	2 @ 425	13½ @ 1750	7.2	15③	14.5③
1BP-4008	CC	27-32	.017	.25-.28	17-20	2 @ 425	13½ @ 1950	7.1	15③	14.5③
1BP-4008A	CC	27-32	.017	.25-.28	17-20	1 @ 440	13½ @ 2100	7.1	15	14.5
1BR-4001	C	39	.020	.25-.28	17-20	1 @ 350	8½ @ 1800	5¼	16	10½
1BR-4001A	C	39	.020	.25-.28	17-20	1 @ 450	8½ @ 1800	6.8	16	10
1BR-4002	C	39	.020	.25-.28	17-20	1 @ 350	8½ @ 1800	None	None	None
1BR-4002A	C	39	.020	.25-.28	17-20	1 @ 440	8 @ 1550	5.3	16	10
1GC-4515-1	C	39	.020	.25-.28	17-20	1 @ 370	9 @ 1025	None	None	None
1GC-4515A-1	C	39	.020	.25-.28	17-20	1 @ 370	11 @ 1250	None	None	None
1GC-4516-1	C	39	.020	.25-.28	17-20	1 @ 370	12 @ 1525	None	None	None
1GC-4517-1	C	39	.020	.25-.28	17-20	1 @ 370	9 @ 1025	None	None	None
1GC-4517A-1	C	39	.020	.25-.28	17-20	1 @ 370	11 @ 1250	None	None	None
1GC-4518-1	C	39	.020	.25-.28	17-20	1 @ 370	12 @ 1525	None	None	None
1889750	C	40-45	.017-.023	.25-.28	17-21	1 @ 475	12 @ 1925	4.7	14.5	12.5
2095270	C	40-45	.017-.023	.25-.28	17-21	1 @ 450	11 @ 2200	4.9	12	10.3
2095843	C	27-32	.014-.019	.25-.28	17-21	1 @ 600	9 @ 2000	6	12	11.5
2095844	CC	27-32	.014-.019	.25-.28	17-21	2 @ 425	14 @ 1750	7	12	11.5
2095845	CC	27-32	.014-.019	.25-.28	17-21	2 @ 425	14 @ 1950	6	12	11.5

continued

DISTRIBUTOR SPECIFICATIONS continued

Unit Part No. ①	Rotation ②	Dwell Angle, Degrees	Breaker Gap, In.	Condenser Capacity, Mfds.	Breaker Arm Spring Tension, Oz.	Centrifugal Advance Deg. @ R.P.M. of Dist.		Vacuum Advance		
						Advance Starts	Full Advance	Inches of Vacuum to Start Plunger Movement	Inches of Vacuum for Full Plunger Travel	Maximum Vacuum Advance, Dist. Degrees
2095846	CC	27–32	.014–.019	.25–.28	17–21	1 @ 440	14 @ 2100	6	12	11.5
2095974	C	40–45	.017–.023	.25–.28	17–21	2 @ 475	14 @ 2200	6	12	12.5
2095976	C	40–45	.017–.023	.25–.28	17–21	1 @ 475	12 @ 2300	6	13	7.5
2098665	C	40–45	.017–.023	.25–.28	17–20	1 @ 525	14 @ 2200	8.5	10	8.5
2098670	C	40–45	.017–.023	.25–.28	17–20	1 @ 560	12 @ 2500	10.5	13	7.5
2098674	CC	28–33	.014–.019	.25–.28	17–20	2 @ 425	13 @ 1600	9.2	12	11.5
2098675	C	40–45	.017–.023	.25–.28	17–20	4 @ 475	14 @ 2200	8.5	10	8.5
2098687	CC	28–33	.014–.019	.25–.28	17–20	2 @ 425	13 @ 2000	9.2	12	11.5
2098692	C	40–45	.017–.023	.25–.28	17–20	1 @ 540	10 @ 2000	8.5	10	8.5

①—Stamped on plate riveted to housing. ②—C—Clockwise. CC—Counterclockwise

③—R series with V8–361 and V8–413 engines dated Feb. 9 and after, having distributors with unit part No. 2095795, 96 and 97; 10° at 12″ vacuum

WHEEL ALIGNMENT SPECIFICATIONS

Model	Caster, Deg. ②	Camber, Deg.	Toe-In, Inch	Kingpin Angle, Deg.
B-3 AND B-4 SERIES, 1952-53				
B	3	1½	⅛	4
C	2½	1½	⅛	4
D, DU	1½	1½	⅛	4
EU, F, FA, FS	1½	2	⅛	7
G, GA, GS	1½	2	⅛	7
GM, GMA	2	2	⅛	7
H, HH, HA	2	2	⅛	7
HHA, HS, HHM	2	2	⅛	7
HHMA, HM, HMA	2	2	⅛	7
J, JA	1	2	⅛	7
KM, JMA	2	2	⅛	7
JS	2½	2	⅛	7
K, KA	1	2	⅛	7
JM, KMA	2	2	⅛	7
PW	1	1½	⅛	8
R, RA	2½	2	⅛	7
RS	1¾	1	⅛	8
T, TA	1½	1	⅛	8
V	2	1	⅛	5½
VA, VX	1½	1	⅛	8
Y	2	1	⅛	5½
YA	1½	1	⅛	8
YX	2	1	⅛	5½
C-1 AND C-3 SERIES, 1954-56				
B6, B8	3	1½	0–⅛	4
C6, C8, CN6	2¼	1½	0–⅛	4
D6, D8	2¼	1½	0–⅛	4
DN6	2½	1½	0–⅛	4
DU6, EU6	1½	1½	0–⅛	4
F6, F8	1½	2	0–⅛	7
FN6	2½	1½	0–⅛	4
G6, G8	1½	2	0–⅛	7
H6, H8, HM6	1	2	0–⅛	7
J6, J8, JM6	1¼	2	0–⅛	7
K6, KA6, K8	1¼	2	0–⅛	7
KA8, KMA6	1¼	2	0–⅛	7
PW6	½	1½	0–⅛	4
R8, RA8	2	2	0–⅛	7
T8	2¾	1	0–⅛	8
V8	2½	1	0–⅛	5½
Y6, YX6	3¼	1	0–⅛	5½
K SERIES, 1957				
D100	3	1½	0–⅛	4
D200, D300, P300	2½	1½	0–⅛	4
W300	½	1½	0–⅛	8
D400, P400	1½	2	0–⅛	7
C500, D500	2½	2	0–⅛	7
W500	2½	¾	0–⅛	8
C600, D600	¼	2	0–⅛	7
C700, D700	¼	2	0–⅛	7
T700, D800, D900	2¾	1	0–⅛	5½
T800, T900	3¼	1	0–⅛	5½
L SERIES, 1958				
D100	3	1½	0–⅛	4
W100, W200	3	1½	0–⅛	7½
D200, D300	2½	1½	0–⅛	4
P300	2½	1½	0–⅛	4
W300	3½	1½	0–⅛	7½
W300M	½	1½	0–⅛	8
D400, P400, S400	1½	2	0–⅛	7

WHEEL ALIGNMENT SPECIFICATIONS continued

Model	Caster, Deg. ②	Camber, Deg.	Toe-In, Inch	Kingpin Inclination, Deg.
W500	2½	¾	0–⅛	8
D500, S500, C500	2½	2	0–⅛	7
C600, D600	¼	2	0–⅛	7
S600, D900	2¾	1	0–⅛	5½
C700	¼	2	0–⅛	7
S700, T700, D800	2¾	1	0–⅛	5½
T800, T900	3¼	1	0–⅛	5½

M SERIES, 1959

D100	3	1½	0–⅛	4
D200, D300, P300	2½	1½	0–⅛	4
W100, W200	3	1½	0–⅛	7½
W300	3½	1½	0–⅛	7½
W300M	½	1½	0–⅛	8
W500	2½	¾	0–⅛	8
D400, P400, S400	1½	2	0–⅛	7
D500, C500, S500	1	2	0–⅛	7
D600, C600	1	2	0–⅛	7
C700, D700	1	2	0–⅛	7
S600, S700	2¾	1	0–⅛	5½
T700, D800, D900	2¾	1	0–⅛	5½
T800, T900	3¼	1	0–⅛	5½

P SERIES, 1960

D100	3	1½	0–⅛	4
D200, D300, P300	2½	1½	0–⅛	4
W100, W200	3	1½	0–⅛	7½
W300	3½	1½	0–⅛	8
WM300	½	1½	0–⅛	8
W500	2½	¾	0–⅛	8
D400, P400, S400	1½	[illegible]	0–⅛	7
D500, S500, D600	1	2	0–⅛	
C500, C600, D700	1	2	0–⅛	7
S600	2¾	1	0–⅛	5½
C700, C800, C900	2¾	1	0–⅛	5½
CT800, KC800	4	1	0–⅛	5½
KCT800, NCT800	4	1	0–⅛	5½
KC900, NC900	4	1	0–⅛	5½
CT900, KCT900	4	1	0–⅛	5½
NCT900	4	1	0–⅛	5½
C1000, NC1000		1	0–⅛	5½
NCT1000	4	1	0–⅛	5½

1961 R SERIES, 1962-63 S SERIES

D100	1½–2½	1½	0–⅛	4
W100, W200	3	1½	0–⅛	7½
D200, P200	1½	1½	0–⅛	4
D300, P300	1½	1½	0–⅛	7
W300	3½	1½	0–⅛	8
WM300	½	1½	0–⅛	8
D400, P400③	1½–2½	2	0–⅛	7
D400, P400④	½–1½	2	0–⅛	7
S400	1½–2½	2	0–⅛	7
C500	0–1	2	0–⅛	7
D500, S500	½–2	2	0–⅛	7
W500	2½	¾	0–⅛	8
C600④	0–1	2	0–⅛	7
C600⑤	½–1	2	0–⅛	7
D600④	1–2	2	0–⅛	7
D600⑤	0–1	2	0–⅛	7
S600	0–1	1	0–⅛	5½
C700, CT700	0–1①	1	0–⅛	5½
D700④	1–2	2	0–⅛	7
D700⑤	0–1	2	0–⅛	7
C800, CT800	0–1①	1	0–⅛	5½
KC800, KCT800	0–1①	1	0–⅛	5½
NCT800	0–1①	1	0–⅛	5½
C900, CT900	0–1①	1	0–⅛	5½
KC900, KCT900	0–1①	1	0–⅛	5½
NC900, NCT900	0–1①	1	0–⅛	5½
C1000, NC1000	0–1①	1	0–⅛	5½
NCT1000	0–1①	1	0–⅛	5½

①—With power steering 4° to 5°. Caster should be checked with vehicle loaded. If caster cannot be checked when vehicle is loaded the no load caster is approximately 1° to 2° for manual steering and 5° to 6° for power steering. If vehicle wanders caster should be increased. If steering effort is very high, especially when taking corners, caster should be decreased.

②—No load.

③—4000 lb. axle.

④—5000 lb. axle.

⑤—7000 lb. axle.

Engine Section

ENGINE, REPLACE

1952-53 Except C.O.E. Models

1. Take off the hood.
2. Drain cooling system.
3. Remove headlamps.
4. Remove radiator tie rods.
5. Remove radiator hose.
6. Remove radiator shell, radiator core, hood lower side panels and both front fenders as a complete assembly.
7. Remove mat and floorboard.
8. Disconnect propeller shaft.
9. Remove transmission.
10. Remove clutch and brake pedals.
11. Disconnect choke, throttle linkage and vacuum lines.
12. Disconnect exhaust pipe at manifold.
13. Disconnect heat indicator tube and bulb at cylinder head.
14. Disconnect oil gauge line at flexible tube.
15. Disconnect starter cable at starter.
16. Disconnect coil wires.
17. Disconnect windshield wiper hose.
18. Disconnect generator wires.
19. Disconnect starter linkage.

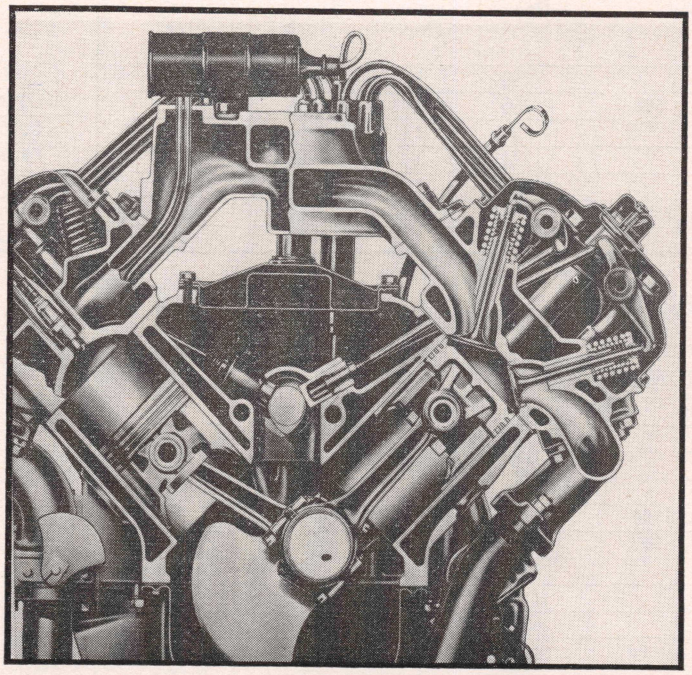

Double rocker arm V8 engine. 1954-59

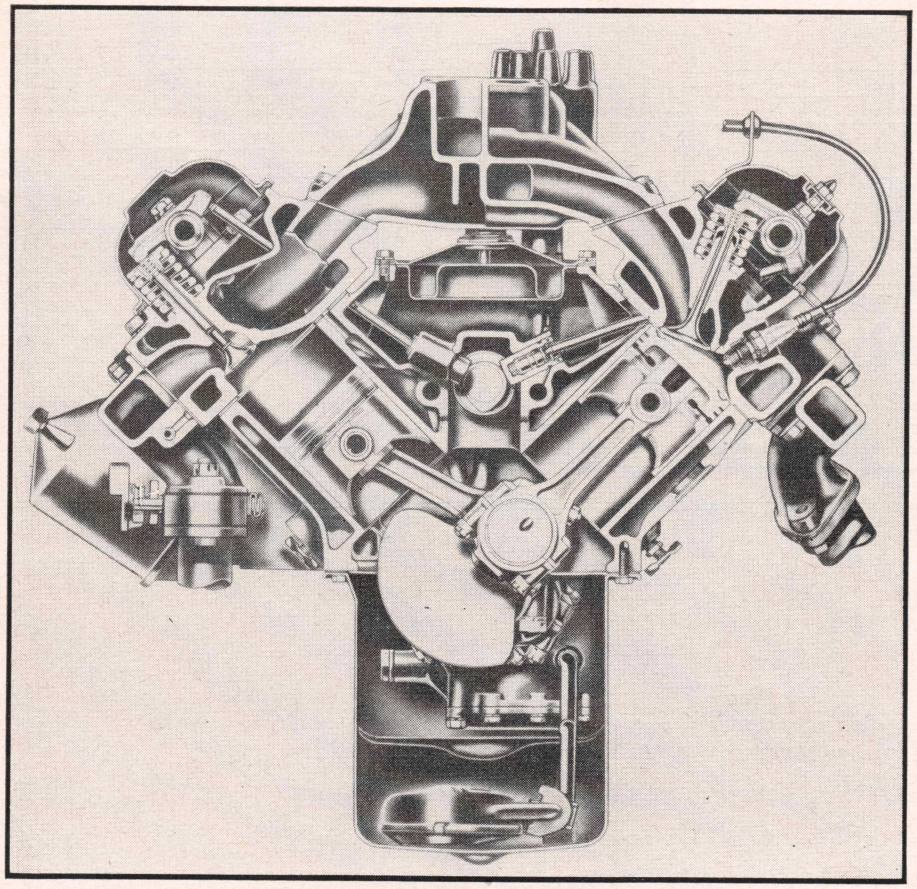

Single rocker arm V8 engine. 1954-59

20. Disconnect carburetor-to-brake booster line check valve.
21. Remove carburetor air cleaner, horn, breather pipe, ignition coil and brake master cylinder.
22. Remove engine mounting bolts.
23. Lift out engine assembly.
24. Reverse the foregoing procedure to install the engine. The exhaust pipe bracket should be loosened and the engine allowed to run a few seconds before tightening engine mounting bolts and exhaust pipe support brackets. This is important for correct engine alignment.

1952-56 C.O.E. Trucks

1. To remove the engine and transmission without removing the cab, proceed as follows:
2. Drain cooling system.
3. Remove hood.
4. Remove radiator, grille and front fenders as a unit.
5. Remove floor mat and floor boards.
6. Disconnect choke, throttle linkage and vacuum lines.
7. Disconnect generator and horn wires, battery ground cable and coil wires.
8. Remove generator.
9. Disconnect hand brake linkage.
10. Remove body-to-fender tie bar.
11. Remove carburetor air cleaner and driver's seat.
12. Remove crankcase filler pipe.
13. Disconnect universal joint at rear of transmission and install a roller jack under transmission.

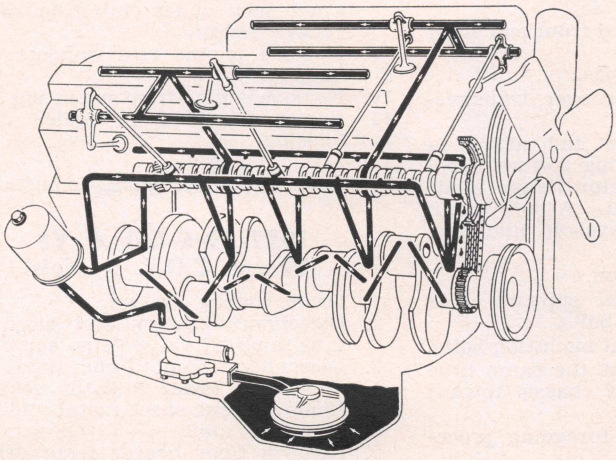

Engine lubrication. 1954-59 V8 double rocker arm engines

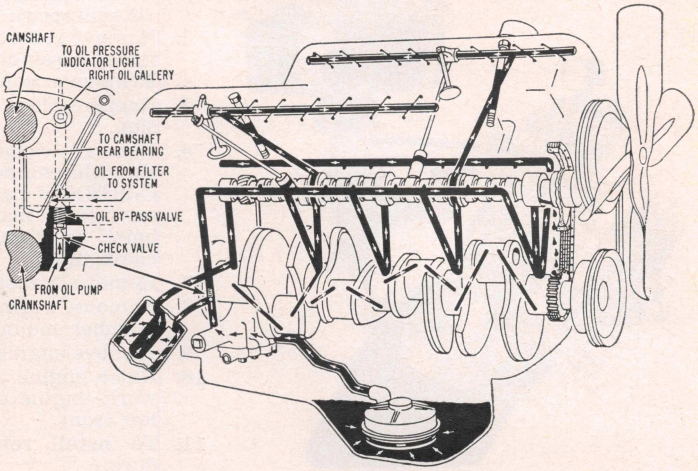

Engine lubrication. V8-318. By-pass valve shown not used in 1963

14. Disconnect exhaust pipe and carburetor air cleaner pipe.
15. Disconnect clutch and brake pedal.
16. Disconnect oil filter lines.
17. Disconnect oil gauge line at engine.
18. Disconnect brake line to master cylinder.
19. Disconnect thermostat plug from cylinder head.
20. Disconnect speedometer cable at transmission.
21. Disconnect shifting bar.
22. Remove engine support bolts.
23. Install engine lifting fixture.
24. Drain engine oil and remove crankcase.
25. Remove exhaust pipe.
26. Remove crankcase breather pipe.
27. Drop one end of tie rod and swing it out of the way to permit additional travel of the roller jack.
28. Have a helper under the truck push the jack forward gradually while lifting the engine with a chain hoist at the front. When the engine has been moved ahead as far as possible. lower the chain hoist so the engine rests on the front bumper. Keep the jack in place under the transmission and have a helper steady the engine in this position. Then reinstall the engine lifting hook as near the rear of the engine as possible so the engine and transmission will be nearly balanced. Gradually lift the engine with the chain hoist and at the same time have the helper under the truck push the jack forward until the engine and transmission clears the frame cross member and front bumper.
29. To install, reverse the foregoing procedure and bleed the brakes.

1954-56 Six-Cylinder Models (Except C.O.E.)

1. Drain cooling system.
2. Remove battery.
3. Disconnect light wires at both front junction connections.
4. Remove bolts from radiator support.
5. Remove hood center and side panels as a unit.

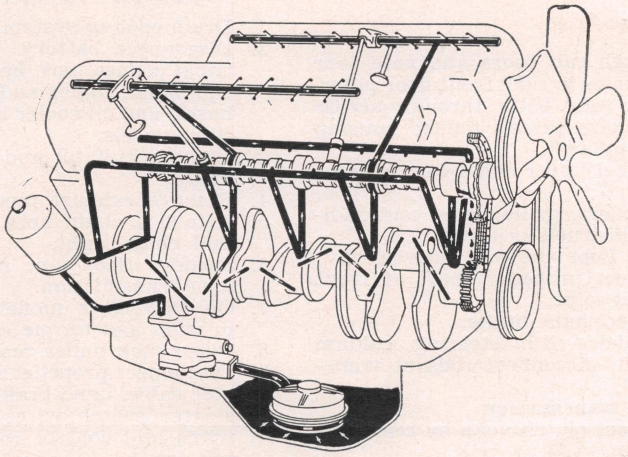

Engine lubrication. 1954-56 V8-241, 259, 270

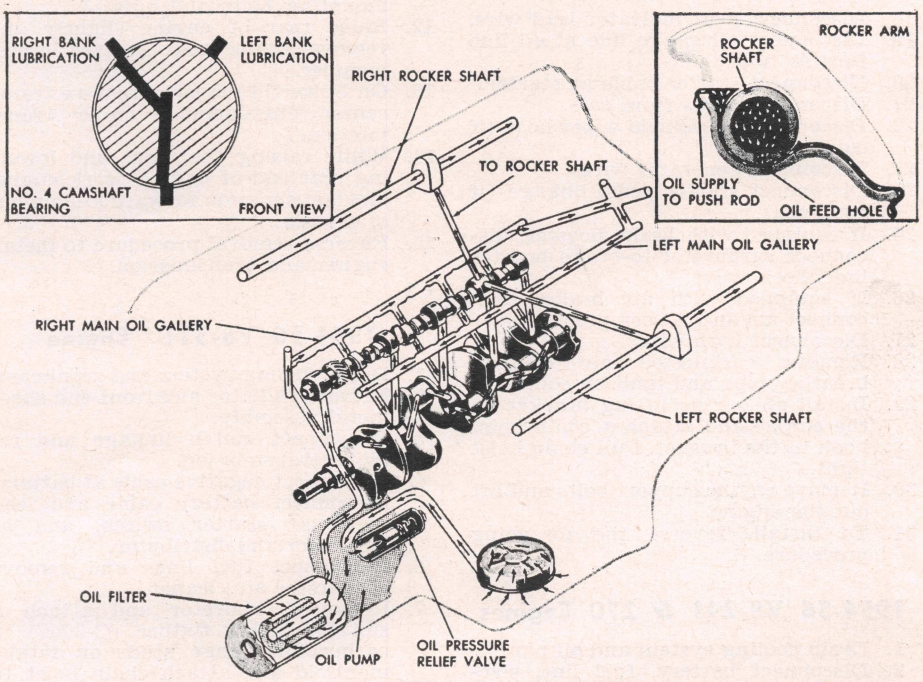

Engine lubrication. V8-361, 413

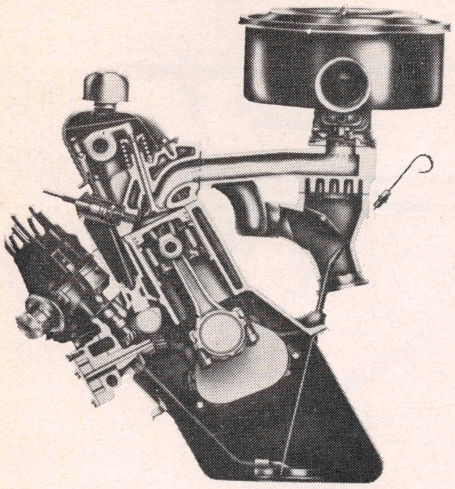

6-170, 225 engine

6. Open both cab doors and note four access holes in each front door pillar. Remove four bolts through access holes (bolts attach fender housing to door pillars).
7. Disconnect upper and lower radiator hoses.
8. Lift fenders, grille panel and radiator from truck as a unit.
9. Remove floor mat and floorboard.
10. Disconnect propeller shaft at front universal joint.
11. Disconnect hand brake.
12. On models with steering column gearshift, disconnect rods at transmission.
13. Remove transmission.
14. Disconnect clutch yoke by removing clevis pin.
15. Disconnect flexible line at fuel pump.
16. Disconnect exhaust pipe at manifold.
17. Disconnect throttle and choke controls.
18. Disconnect heat indicator lead wire.
19. Disconnect oil gauge line at oil line flexible tube.
20. Disconnect starter cable at starter.
21. Disconnect wires from coil.
22. Disconnect windshield wiper hose (if equipped).
23. Disconnect generator wires.
24. Disconnect starter pedal linkage (if equipped).
25. If equipped with brake booster, disconnect carburetor-to-brake booster line check valve.
26. If equipped with air brakes, disconnect air lines at compressor.
27. Disconnect horn wires.
28. Remove carburetor air cleaner, breather pipe and ignition coil.
29. Install an engine lifting bracket on the engine and attach a chain hoist hook to the bracket. Pull chain hoist tight.
30. Remove engine support bolts and lift out the engine.
31. To install, reverse the foregoing procedure.

1954-56 V8-241 & 270 Engines

1. Drain cooling system and oil pan.
2. Disconnect battery, fuel line, electrical connections, and heater duct (if equipped).
3. Remove radiator and front end sheet metal assembly.
4. Remove exhaust pipes.
5. Remove floor cover over transmission.
6. Remove carburetor and attach a suitable engine lifting fixture (Tool C-3162) to carburetor flange studs on intake manifold. Attach chain hoist to fixture eyebolt and pull chain tight.
7. Remove transmission.
8. Remove engine rear support cross member mounting bolts.
9. Remove engine front mounting bolts.
10. Raise engine and at the same time work engine out of chassis toward left front.
11. To install, reverse foregoing procedure.

1955-56 V8-259 Engine

1. Drain cooling system and crankcase.
2. Disconnect battery, fuel line, electrical connections, heater duct (if so equipped), upper and lower radiator hoses, and oil cooler hoses on Powerflite models.
3. Remove radiator and front end sheet metal.
4. Remove exhaust pipes.
5. Attach a chain hoist to engine and pull chain tight.
6. Remove floor mat and floor cover over transmission.
7. On Powerflite models, drain transmission and torque converter.
8. Place jack under rear of engine.
9. Disconnect propeller shaft, speedometer cable, hand brake cable, neutral starter switch wires, back-up light wires and control rods from transmission.
10. Apply hand brake and loosen universal joint companion flange nut.
11. Remove engine front and rear mounting bolts and nuts.
12. Raise rear of engine slightly and remove engine rear support crossmember.
13. On Powerflite models, remove frame center crossmember under transmission.
14. While raising the front and lowering rear end of engine, work engine and transmission forward and up out of chassis.
15. Reverse removal procedure to install engine and transmission.

1954-56 V8-331" Engine

1. Drain cooling system and crankcase.
2. Remove radiator and front end sheet metal assembly.
3. Disconnect clutch linkage and remove transmission.
4. Disconnect negative cable at battery.
5. Disconnect battery cable and lead wires at starter switch, and at generator and distributor.
6. Disconnect fuel lines and remove carburetor air cleaner.
7. Remove carburetor and attach a suitable lifting fixture (C-3060) to carburetor flange studs on intake manifold and attach chain hoist to fixture.
8. Place jack under clutch housing to relieve weight.
9. Remove engine rear support cross member.
10. Remove engine front mounting bolts.
11. Remove jack from under clutch housing.
12. Lift out engine.
13. Reverse the foregoing to install.

1957-59 6-Cyl. & V8 (Except C.O.E. Models)

1. Drain cooling system.
2. Disconnect battery and close fuel tank shut-off valve (if so equipped).
3. Disconnect front light wires and upper and lower radiator hoses.
4. Remove front sheet metal and radiator as a unit.
5. Remove floor boards from driver's compartment.
6. Disconnect propeller shaft at front universal joint.
7. On models equipped with steering column gear shift, disconnect gear shift and selector rods at transmission.
8. Remove transmission.
9. Disconnect clutch yoke by removing cotter key and pin.
10. Disconnect fuel line, wiring and carburetor controls.
11. Remove carburetor, breather pipe and ignition coil.
12. Remove engine from chassis.
13. Reverse removal procedure to install.

1957-59 C.O.E. Models

1. Drain cooling system.
2. Disconnect battery and close fuel shut-off valve (if so equipped).
3. Remove hood center panel.
4. Disconnect front light wires and lower radiator hoses.
5. Remove bumper guards.
6. Lift off grille panel and radiator as a unit.
7. Remove floor boards from driver's compartment.
8. Remove shift lever, hand brake linkage, battery cable, starter wires, speedometer cable and electric shift control.
9. Disconnect propeller shaft at front universal.
10. Remove transmission.

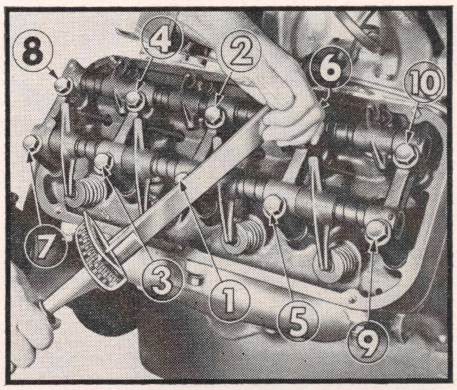

Fig. 1 Cylinder head tightening sequence Double rocker arm V8 engine. 1954-59

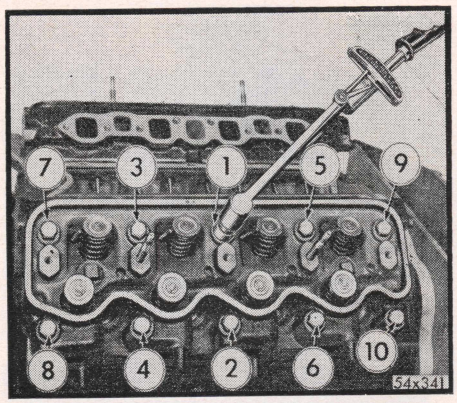

Fig. 2 Cylinder head tightening sequence. Single rocker arm V8 engine. 1954-59 and 1960-63 V8-318

11. Disconnect both exhaust pipes at manifolds; also holding brackets.
12. Disconnect oil filter lines (if filter is not mounted on engine).
13. Remove vertical clutch linkage.
14. Remove carburetor and its controls, heat indicator lead wire, oil gauge line, brake air compressor tubes at frame and fire wall (if so equipped), and high and low tension wires.
15. Remove engine supports and lift engine from chassis.
16. Reverse above procedure to install the engine.

1960-63 Six & V8-318

1. Disconnect battery and close fuel tank shut-off valve.
2. Disconnect light wires and radiator hoses.
3. Remove front sheet metal and radiator as a unit.
4. Remove floor boards from driver's compartment.
5. Disconnect propeller shaft at front U-joint.
6. On models with steering column gearshift, disconnect rods at transmission.
7. Remove transmission.
8. Disconnect clutch yoke.
9. Disconnect fuel line at pump, exhaust pipe at manifold, throttle and choke controls, heat indicator lead wire, oil gauge line at oil line flexible tube.
10. Disconnect starter cable at starter, high and low tension wires at ignition coil, generator wires, carburetor-to-brake booster line check valve (if equipped), air lines at compressor if air brakes are used, and horn wires.
11. Remove carburetor, air cleaner, breather pipe and ignition coil.
12. Remove engine support bolts and lift engine from chassis.
13. Reverse foregoing procedure to install the engine.

1960-63 V8-361, 413

1. Remove oil coolant hoses and fuel lines.
2. Remove front bumper.
3. Disconnect tie rods at engine firewall.
4. Remove bolts at radiator yoke.
5. Remove radiator and fenders as a unit.
6. Remove transmission short shaft.
7. Remove transmission.
8. Remove carburetor.
9. Install engine lifting fixture on intake manifold.
10. Remove engine mounting bolts and lift engine out of chassis.
11. Reverse removal procedure to install engine.

CYLINDER HEAD, REPLACE

V8 Engines

Before the cylinder head is removed, first remove the rocker shaft assembly. Slide out the push rods and place them in a numbered rack so that each push rod can be reinstalled in its original position.

When installing a cylinder head, always use new gaskets. Make sure all holes are punched through. Be sure cylinder head enters both dowel guide pins in the cylinder block. Tighten cylinder head bolts in the manner described below.

Extreme care must be exercised when tightening rocker shaft bolts and nuts so that the hydraulic lifters have time to bleed down to their operating length. If the lifters are forced down rapidly, damage to the push rods, lifter bodies or rocker arms will result.

Cylinder head bolts should be tightened down in the sequence shown in Figs. 1, 2 and 3, and to the torque loads listed in the *Engine Tightening* chart.

Side Valve Sixes

After removal, cylinder head should be carefully cleaned and inspected for cracks and plugged water passages. When installing the head, a new gasket should be used and both sides should be coated with a suitable sealing compound. Refer to Figs. 4 and 5 for proper tightening sequence. Tighten to the specified torque after the engine has reached operating temperature. After approximately 20 hours or 500 miles of operation, head bolts should again be tightened to the proper torque while the engine is hot.

Overhead Valve Six

Before installing cylinder head, clean all gasket surfaces of cylinder block and

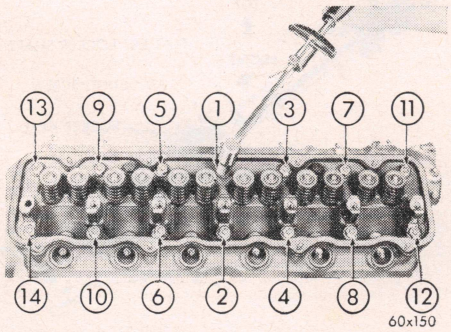

Fig. 6 Head tightening sequence. Overhead valve six

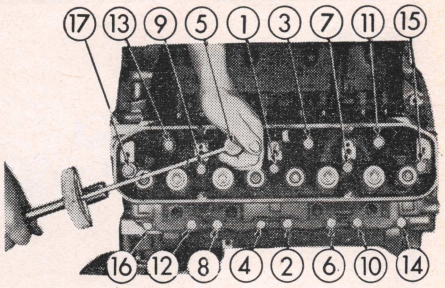

Fig. 3 Cylinder head tightening sequence. V8-361, 413

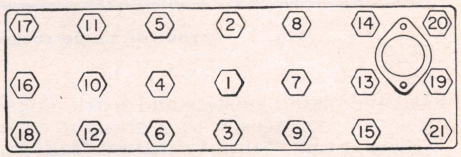

Fig. 4 Head tightening sequence for 21-bolt side valve 6-cylinder engines

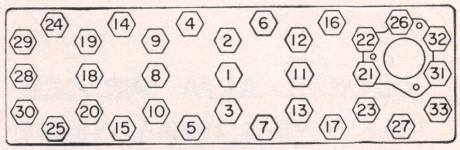

Fig. 5 Head tightening sequence for 33-bolt side valve 6-cylinder engines

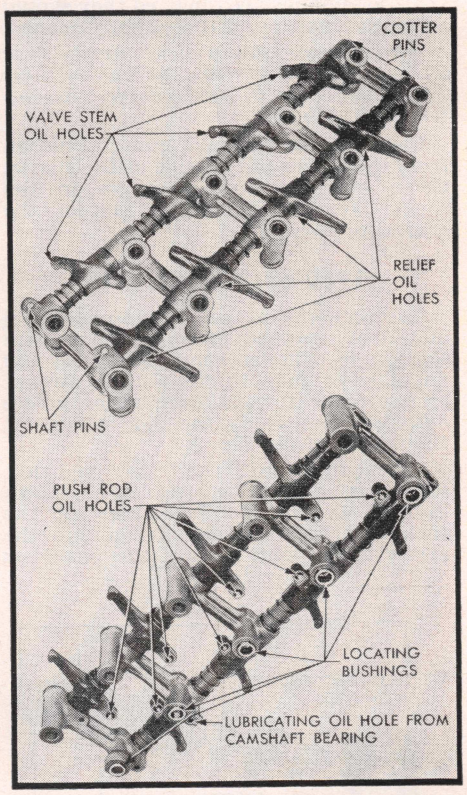

Fig. 7 Top and bottom view of double rocker arm assembly. 1954-59 V8 engine

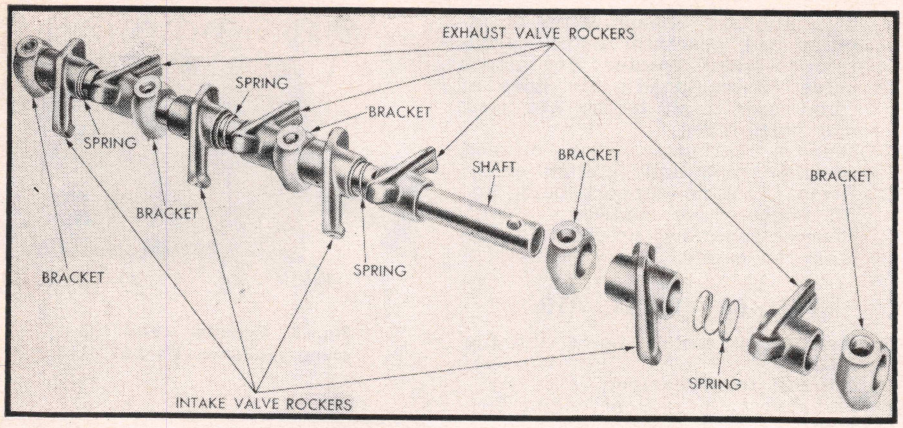

Fig. 8 Layout of single rocker arm parts. 1954-59 V8 engine

head and install gaskets and spark plugs. Check all surfaces with a straight edge if there is any reason to suspect leakage. Coat new gasket with suitable sealer before installing. Install head bolts and tighten them in the sequence shown in Fig. 6. Repeat the procedure and tighten bolts to the torque listed in the *Engine Tightening* table.

ROCKER ARM SERVICE

1954-59 V8 & 1960-63 V8-318

Sludge and gum formation in the rocker arms and shafts will restrict the normal flow of oil to the rocker arms and valves. Each time the rocker arm and shaft assemblies are removed they should be disassembled and thoroughly cleaned.

When disassembling rocker arms, place all parts on the work bench in their proper sequence to insure correct assembly, Figs. 7 and 8.

Clean all sludge and gum formation from the inside and outside of the shafts. Clean oil holes and passages in the rocker arms and shafts. Inspect the shafts for wear.

1960-63 V8-361, 413

The rocker arms are of stamped steel and are arranged on one rocker arm shaft, per cylinder head. The push rod angularity tends to force the pairs of rocker arms toward each other where oilite spacers carry the side thrust at the rocker arms, Fig. 9.

When installing, the right and left rocker arms must be installed as shown in Fig. 10. The stamped arrow on the rocker shaft must be on top and the arrow must point toward the push rod socket of the rocker arm. This is necessary to provide proper lubrication to the rocker assemblies. The two wide brackets must be installed with the oil feed grooves facing the push rod side of the rocker arm as shown.

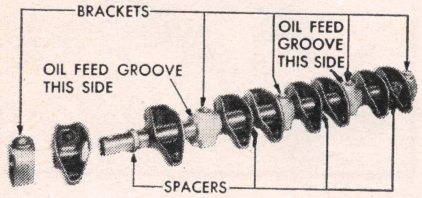

Fig. 9 Rocker arms and shaft. V8-361, 413

Overhead Valve Six

To remove rocker arms, take off head cover outlet tube, rocker arm cover and rocker shaft bolts and retainers. Lift off rocker arm and shaft assembly.

Clean all parts. Be sure the inside of the shaft is clean and the oil holes are open. The drilled hole in the bore of the rocker arm must be open to the trough and valve end of the arms. The trough also feeds oil to the adjusting screw and push rod. Assemble and install as follows:

1. Referring to Fig. 11, note flat on forward end of rocker shaft. The flat also denotes the upper side of the shaft. Rocker arms must be put on the shaft with the adjusting screw to the right side of the engine. Place one of the small retainers on the one long bolt and install the bolt in the rear hole in the shaft from the top side.
2. Install one rocker arm and one spacer; then two rocker arms and a spacer. Continue in same sequence until all rocker arms and spacers are on the shaft.
3. Place a bolt and small retainer in front hole in shaft.
4. Place a bolt and the one *wide* retainer through the center hole in the shaft with six rocker arms on each side of center.
5. Install remaining bolts and retainers, separating the four pairs of rocker arms.
6. Locate assembly on cylinder head and position rocker arm adjusting screws in push rods.
7. Tighten bolts finger tight, bringing retainers in contact with shaft *between rocker arms.* Then tighten bolts to 30 ft. lbs.
8. After running engine to normal operating temperature, adjust valve lash to specifications. Complete installation of remaining parts removed.

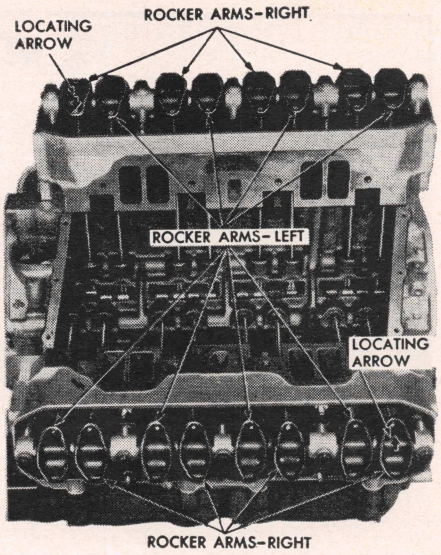

Fig. 10 Rocker arms installed. V8-361, 413

VALVES, ADJUST

Side Valve Sixes

As a preliminary cold setting, adjust the tappets to .010" on intakes and approximately .003" less than the hot clearance setting for exhaust valves. To obtain an accurate cold setting, adjust each tappet when the cam nose is down. If clearance is set when the tappet is part way up the quieting ramp on the cam, excessive clearance will result when the cam comes down.

When adjusting, be sure the feeler stock is flat and of the correct thickness. The use of old feeler stock that is bent or torn can result in an improper adjustment.

Finish checking the clearance when the engine is at normal operating temperature and running at normal idling speed. Then adjust the tappets to the clearances listed in the *Tune Up & Valve Specifications* table. Page 526

If the truck is to be operated at high speeds for long periods, an additional .002" clearance may be desirable. Be sure the engine is running and hot when allowing for this additional clearance.

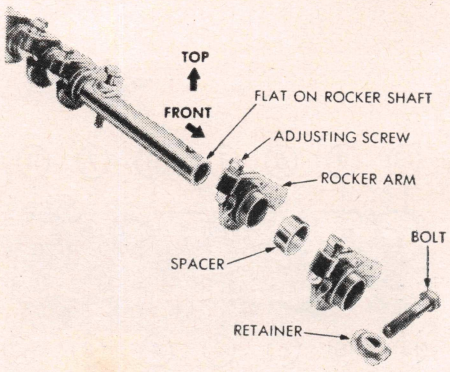

Fig. 11 Rocker arms and shaft. Overhead valve six

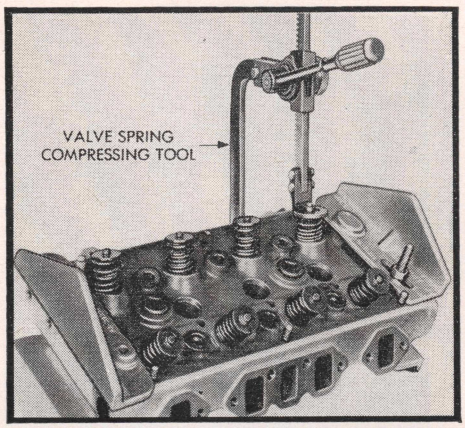

Fig. 12 Removing valves from V8 engines

Overhead Valve Six

If the cylinder head has been removed, it is good practice to make an initial valve adjustment before starting the engine. Before starting the adjustment, make two chalk marks on the vibration damper. Space the marks about 120 degrees apart (⅓ of circumference) so that with the timing mark the damper is divided into three equal parts. Adjust the valves for No. 1 cylinder. Repeat the procedure for the remaining valves, turning the crankshaft ⅓ turn in the direction of normal rotation while adjusting the valves in the firing order sequence of 153624.

For final adjusment, operate the engine until it attains normal operating temperature. Then adjust valve lash with the engine idling to the clearance listed in the *Tune Up Chart.*

VALVES, REMOVE

Side Valve Engines

After taking off the cylinder head, remove the valve chamber covers and use a cloth to block off the holes in the valve chamber to prevent the valve locks from falling into the crankcase.

With a suitable valve spring compressor, raise the springs on those valves which are closed and remove the valve locks. Then turn the crankshaft until those valves which are open are closed and remove the remaining valve locks.

Remove all valves and place them in a board with numbered holes so that they can be identified as to the valve port from which they were removed.

Overhead Valve Engines

After removing the cylinder head and rocker arm assemblies, use a suitable spring compressor, Fig. 12, to compress the springs. Remove the valve locks and springs, Figs. 13 and 14. Check the keeper grooves in the valve stems for burrs and remove any burrs with a file to prevent scoring of valve guides.

Remove the valves and place them in a board with numbered holes so they can be replaced in the same valve port from which they were removed.

VALVES, GRIND

All Engines

Clean the valves with a wire wheel brush, making sure that all carbon is removed from the top and bottom of the heads as well as the gum which might have accumulated on the stems.

In refacing valves, take off only the minimum of metal required to clean up the valve faces. If the outer edge of the valve becomes too thin or sharp due to excessive grinding, the valve must be replaced. In other words the valve head margin must be at least $\frac{3}{64}$", otherwise the valve must be replaced. This margin is the area above the contact surface of the valve face, Fig. 15.

Inspect the valve seats in the block or head for cracks, burns, pitting, ridges or improper angle. During any general engine overhaul it is advisable to reface the valve seats regardless of their condition. If new valve guides are required, they must be installed and reamed before refacing the seats if the equipment used for refacing the seats has a valve guide pilot.

The valve seat width after refacing should be a liberal $\frac{1}{16}$" for intake seats but not more than $\frac{3}{32}$" in any case. The width of exhaust seats should be $\frac{3}{64}$" to a liberal $\frac{1}{16}$".

A simple check can be made to prove the fit of the valve in the valve seat by spreading a thin film of Prussian Blue on the valve face and then inserting the valve in the valve seat. With hand pressure, rotate the valve ¼ turn remove it and observe the transfer of Prussian Blue to the valve face. An uneven transfer of Prussian Blue will indicate an inaccurate valve and valve seat refacing operation.

VALVE SEAT INSERTS

Since these inserts are too hard to reface by ordinary hand grinding methods, a high speed grinder or special lapping equipment should be used to perform this operation. When using this equipment, be sure valve guides are clean and the valve guide pilot is a snug fit in order to assure a concentric seat. Finished seats should be checked with a dial indicator and runout should not exceed .001".

To remove an insert, if a suitable puller, Fig. 16, is not available, drill two holes at opposite sides of the insert, but not all the way through. Then cut through the undrilled portion with a sharp chisel to remove the two pieces.

To install a new insert, first remove all burrs and sharp edges from the counterbore in the head or block. Then chill the new insert with dry or wet ice to obtain maximum contraction of the metal and drive it in place.

If a standard insert is too loose (less than .002" press fit) a .010" oversize insert is available. Before it can be installed, however, the counterbore in the block or head must be machined to fit the new insert.

VALVE SPRINGS

All Engines

After removing the valve springs, wash them with gasoline or other suitable solvent. Examine the springs for damage or corrosion due to acid etching, which will develop into surface cracks and cause spring failure.

Check the valve spring tension on a spring tension fixture, Fig. 17, if one is available. If not available, at least check the free length of each spring by standing it alongside a new spring. Any spring that does not conform to the pressure specifications given in the *Tune Up &*

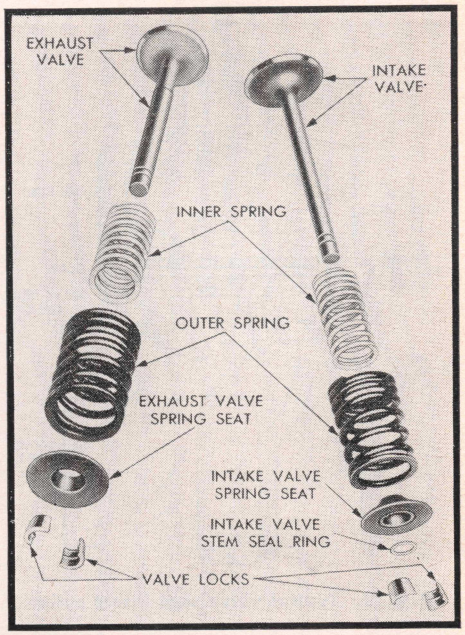

Fig. 13 Layout of valves and related parts. Typical of all double rocker arm V8 engines

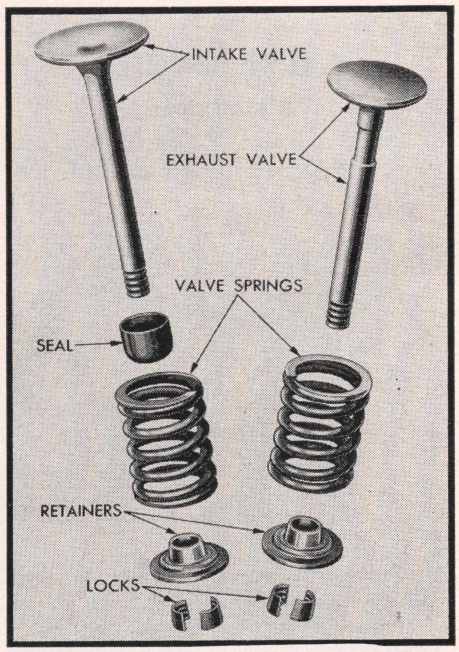

Fig. 14 Layout of valves and related parts. Single rocker arm V8 engines

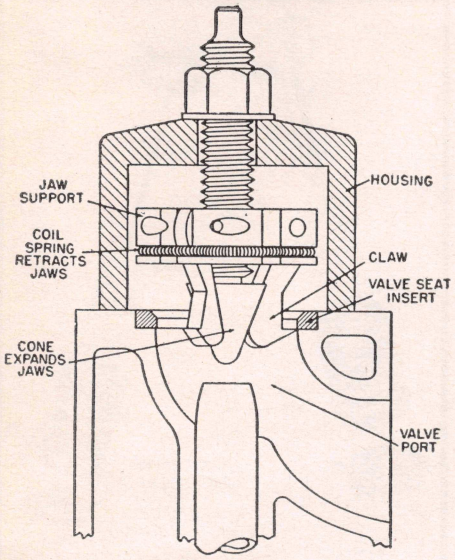

Fig. 16 Typical valve seat insert puller

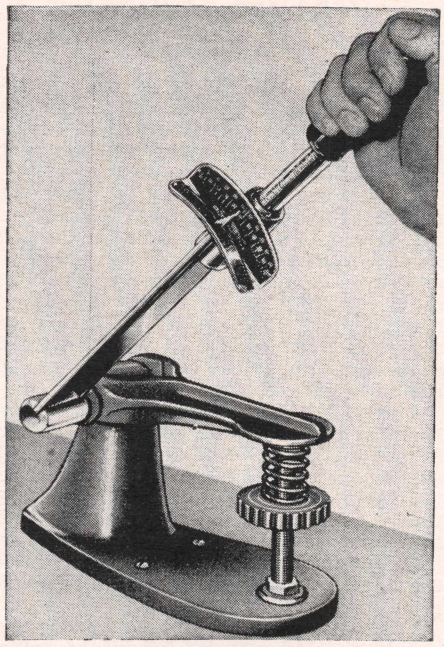

Fig. 17 Fixture and torque wrench for checking valve spring tension

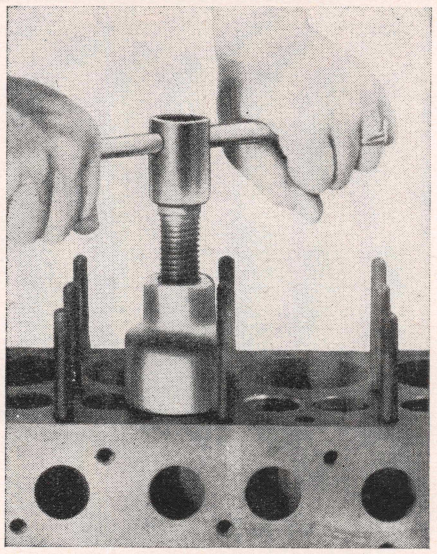

Fig. 18 Valve guide removing tool. Six-cylinder engines

Valve Specifications table within 10% should be replaced. Likewise, any spring that stands shorter than the new spring used for comparison should be discarded. Of course, cocked springs should be scrapped.

VALVE GUIDES

All Engines

Clean the valve guides with a wire guide brush and check the clearance between valve stems and guides. Excessive clearance between valve stems and guides will cause improper seating and burned valves. When there is too much clearance between intake valve stems and guides, there is a tendency to draw oil vapor through the guide on the suction stroke, causing excessive oil consumption, fouled spark plugs and poor low speed performance.

Valve stem-to-guide clearance may be checked with a dial gauge or a suitable plug gauge. Lacking either of these tools, take a new valve and place it in

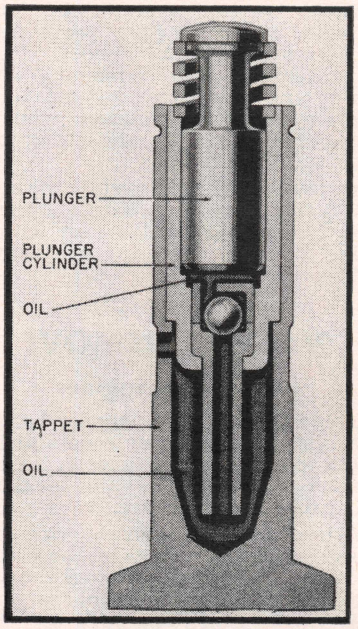

Fig. 21 Hydraulic valve lifter used on some 281 and larger six-cylinder engines

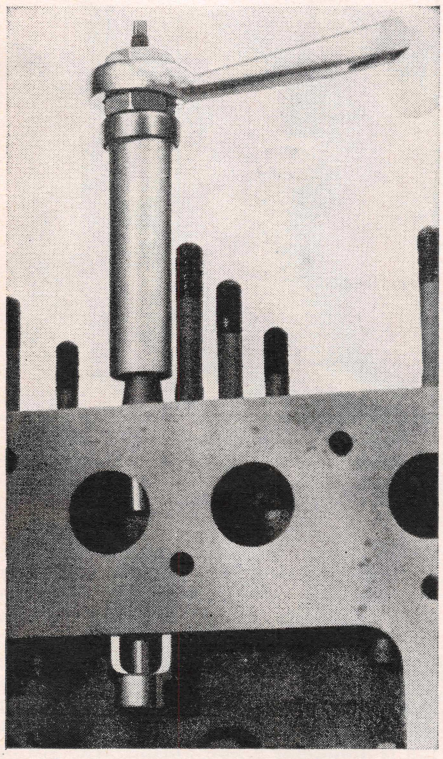

Fig. 19 Valve guide installing tool. Six-cylinder engines

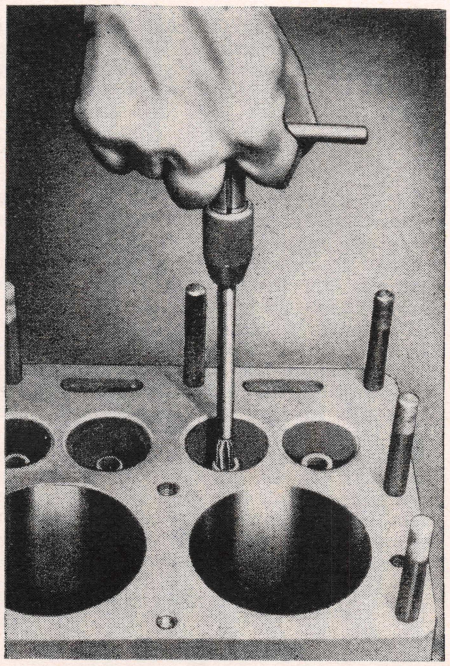

Fig. 20 Valve guide expansion reamer

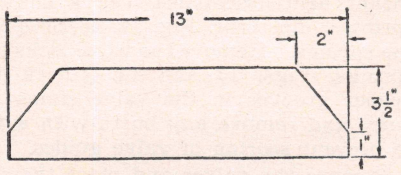

Fig. 22 Valve lifter guide installing plate for 281 and larger six-cylinder engines

each guide and feel the clearance by moving the valve stem back and forth. If this check indicates excessive clearance, it will be necessary to correct the condition as outlined below.

If the clearance is not excessive when checking with a new valve but is excessive when checked with the old valve, the old valve stem is worn and a new valve must be installed.

1954-59 V8 Double Rocker Arm Engines, V8-361, 413 & Side Valve Sixes

Valve guides in 6-cylinder engines may be removed and installed with the tools shown in Figs. 18 and 19. On V8 engines with double rocker arms, the guides may be removed and installed with special drivers designed for the purpose.

After the new guides have been installed, they should be reamed to round out the holes and to provide adequate operating clearances, Fig. 20.

1954-59 V8 Engines With Single Rocker Arms, V8-318 & Overhead Valve Six

These engines do not have removable valve guides, the valves operating in guide holes bored in the cylinder head. Valves with oversize valve stems are available for service replacement when necessary to ream the guide holes.

Standard production reaming of both intake and exhaust valves is .374-.375". When reaming guides for oversize valve stems do not attempt to ream from standard to .090" oversize. If necessary to ream to that size, use the step procedure of .005", .015" and .030". This must be done in order to maintain a true relationship of the guide to the valve seat. The following chart indicates reamer size and valve stem size.

Reamer Oversize	Valve Stem Size
.005"	.379-.380"
.015"	.389-.390"
.030"	.404-.405"

If an "I" or an "E" is stamped on the cylinder head at the rocker cover gasket boss, all intake and exhaust valves are oversize in that bank, depending upon what letter is stamped.

MECHANICAL VALVE LIFTERS

Side Valve Sixes

In some of the larger engines, valve lifters are carried in removable guide clusters bolted to the cylinder block. When lifters are worn it is usually easier to replace the entire lifter and bracket cluster rather than try to use the old lifters with new brackets and vice versa.

On engines without removable lifter guide brackets, the lifters may be removed, the guides reamed and oversize lifters installed. Oversizes of .001", .008", .030" and .060" are available. To remove lifters from these engines, it is necessary to take out the camshaft, remove the oil pan and take the lifters out through the bottom of the engine.

When reaming lifter guides, the cylinder head and valves will have to be removed so that the reamer pilot can be inserted through the valve stem guide hole.

HYDRAULIC VALVE LIFTERS

Side Valve Sixes

Installed in some of the larger engines (those with removable valve lifter guide brackets) are hydraulic valve lifters of the type shown in Fig. 21. To remove either of the lifter and guide assemblies, proceed as follows:

1. Remove valve cover plates.
2. Turn crankshaft until all lifters in the guide bracket are in the lowest position.
3. Bend locking tabs away from guide bracket attaching bolts and remove bolts.
4. Make certain that the small wire retaining rings are in place on each lifter to prevent lifter from dropping out of guide.
5. Insert a suitable bar into one of the attaching bolt holes of the guide bracket and pry down and out to release the lifters from the valve stems.
6. After lifters are free from the valve stems, work the guide bracket out of the engine.

Service—The plunger is a select fit in the particular cylinder and *must never* be used in any other cylinder since the leak-down rate (metering of oil through lifter) is controlled by the clearance between these parts.

To properly handle hydraulic lifters and guides, construct a rack with holes in it large enough to hold the various parts. Place the parts in the rack as they are removed so that each unit can be reassembled as it was originally installed.

Disassembly—Remove the retaining rings from the lifters and take the lifters from the guides. Taking each lifter in turn, remove the cylinder by drawing it out of the lifter body. Remove the plunger by pulling outward and twisting in a clockwise direction. This will detach the spring from the recess in the cylinder body.

Inspection—Wash all parts and dry with compressed air. Examine the lifter face, body, plunger and cylinder for wear. If any of these parts show evidence of looseness or damage the complete unit should be replaced.

To test the ball check valve, suck on the oil inlet tube and seat the ball. If no leakage exists, the vacuum created will keep the tube attached to the tongue. If vacuum in the tube disappears, the complete lifter must be renewed since the ball check is leaking.

With plunger and cylinder dry and clean, place the plunger into the cylinder and squeeze them together between thumb and forefinger. The plunger should be springy and riding on a cushion of trapped air. If leakage is evident, clearance is too great and the complete lifter should be replaced. Make certain that the check ball valve is seated when making the latter test.

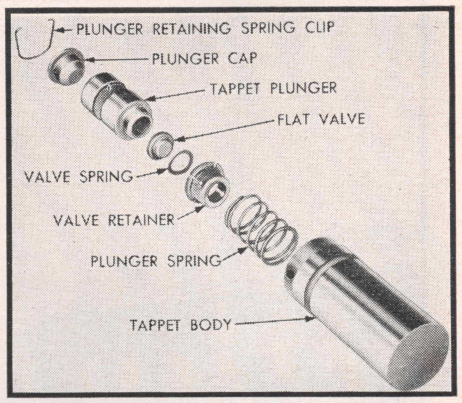

Fig. 23 Hydraulic valve lifter of the flat valve type. V8 engines

Reassembly—Insert the plunger into the cylinder (dry) and turn clockwise, while pushing in until the spring seats in the counterbored recess in the cylinder. At the same time, release the trapped air by inserting a toothpick or wood match into the oil inlet tube to unseat the ball check valve. Insert plunger and cylinder in body. Then install the lifters into the proper location in the guide bracket and install the retaining rings.

Installation—Make certain the camshaft lobes are positioned so that all lifters for a particular assembly will be in the lowest possible position. Make an Installing plate to the dimensions shown in Fig. 22 from smooth sheet metal. Place the assembly in the engine and position the installing plate on top of the lifters and under the valve stems. Push the lifter guide assembly into place and align it with the cylinder block bolt holes. Remove the installing plate, and install the bolts and lock by bending up the corners of the locking plate.

Start the engine and make sure oil is reaching all lifters and that each lifter is functioning properly. A properly working lifter will function without noticeable plunger spring action a few minutes after the oil pressure reaches them.

Install the cover plates, using new gaskets, and make sure there are no oil leaks.

V8 Hydraulic Lifters

Figs. 23 and 24 illustrate the type of

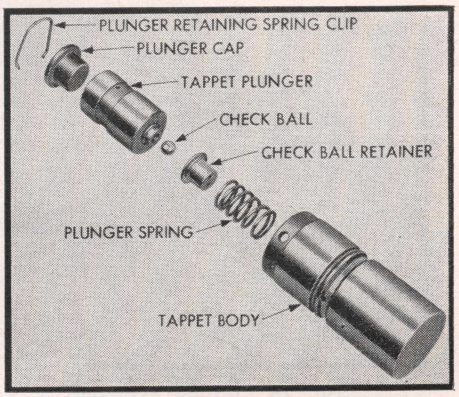

Fig. 24 Hydraulic valve lifter of the ball check type. V8 engines

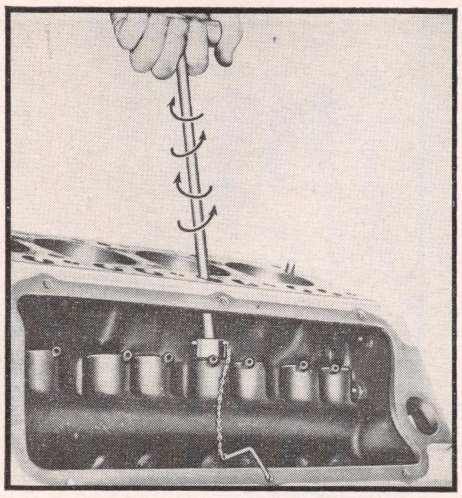

Fig. 25 Removing stuck hydraulic lifter with special tool. V8 engines

hydraulic valve lifters used. Before disassembling any part of the engine to check for noise, check the oil pressure at the gauge and the oil level in the oil pan. The pressure should be between 40 and 65 pounds at 1500 rpm. The oil level in the pan should *never be above the "full"* mark on the dipstick, *nor below* the "add oil" mark. Either of the two conditions could be responsible for noisy lifters.

Oil Level Too High—If the oil level is too high it is possible that the connecting rods can dip into the oil when the engine is running and create foaming. This foam is fed to the hydraulic lifter by the oil pump, and air gets into the lifters, causing them to go flat and allow the valves to seat noisy.

Oil Level Too Low—Low oil level may allow the oil pump to take in air which, when fed to the lifters, causes them to lose length and allows the valves to seat noisily. Any leaks on the intake side of the oil pump through which air can be drawn, will create the same lifter action. When the lifter noise is due to aeration, it may be intermittent or constant, and it will always cause more than one lifter to be noisy. When the oil level and leaks have been corrected, the engine should be run at a fast idle for sufficient time to allow all of the air inside of the lifter to be worked out.

To determine the presence of lifter noise, remove the rocker arm covers and reinstall the spark plug wires. Run the engine at idle. Feel each rocker arm to determine which is noisy. The noisy lifter can readily be detected by feel. It should be remembered, however, that worn valve guides or cocked springs are sometimes mistaken for noisy lifters. If such is the case, the noise in all probability will be dampened by applying side thrust on the valve spring with a hammer handle. If the noise is not appreciably reduced, it can then be assumed that the noise is in the hydraulic lifter.

Valve lifter noise can be described as a "light noise" or a "heavy noise". A "light noise" is usually caused by excessive leakdown around the unit plunger or a partially sticking plunger in the cylinder.

A "heavy noise" is caused by either the valve not seating or by foreign particles becoming wedged between the plunger and cylinder, causing the plunger to stick in the down position. This "heavy noise", of course, will be further evidenced by clearance between the valve stem and rocker arm as the valve closes. A "light noise" caused by a lifter can be determined by pushing down the push rod end of the rocker arm. The noise will become more audible, and if the push rod end of the rocker arm is held down long enough, the intensity of the noise may increase. In either instance, the unit assembly should be removed for further inspection and cleaning.

Lifter, Replace

In removing a lifter, Chrysler Tool C-3158 is available for the operation. Insert the hooked portion of the tool in the lifter body. (This portion of the tool can be used to remove lifters without a varnish build-up around the bottom of the body). Lift the lifter out of the bore. If they are stuck, proceed as follows:

Slide the puller portion of the tool through the cylinder head push rod holes and seat it firmly in the top of the lifter, Fig. 25. Insert the puller pin through the body and tool shaft in the holes provided. Grasp the tool handle and pull the lifter out of the bore. As the lifter clears the bore, withdraw the puller pin and remove the tool.

When installing hydraulic lifters in the engine, fill them with light engine oil (10W) to avoid excessive time required to quiet them during initial operation of the engine.

Servicing Lifters

Warning—Hydraulic plungers and bodies are not interchangeable. Therefore, it is advisable to work on one lifter at a time to avoid mixing parts. *Mixed parts will not function.* Moreover, do not mix check valves as they may be slightly worn and will fit only the plungers with which they have been operating.

Testing Lifters

In testing a lifter, secure a container deep enough to completely immerse the lifter assembly. Fill the container with clean kerosene. Remove the cap from the plunger and submerge the lifter. Allow the cylinder to fill with kerosene. Then remove the lifter and replace the cap.

Holding the lifter upright, insert the lower jaw of the pliers shown in Fig. 26 in the groove of the lifter body. Engage the upper jaw of the pliers with the top of the plunger cap as shown. Check the leakdown by compressing the pliers. If the plunger collapses almost instantly, disassemble the unit, clean it again and retest. If the lifter still does not function satisfactorily, install a new unit, being sure to test the new one before installing it in the engine.

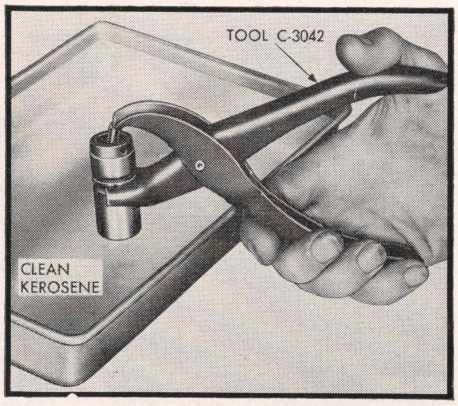

Fig. 26 Testing hydraulic valve lifter. V8 engines

TIMING CHAIN OR GEAR COVER

218, 230, 237, 251, 265 Side Valve Sixes

When installing the chain case cover on these engines, place a new gasket in the cover, then drive the oil seal in position, using a drift or a flat piece of metal slightly larger than the seal to assure a tight, even contact between the seal and its seat.

When fastening the cover, care must be used to center the seal on the crankshaft before tightening the cover screws. A special centering tool, Fig. 27, is available to make the installation. When using this tool, first tighten the screws only enough to hold the cover in place. Then insert the tool, holding it by the crankshaft starting jaw, tightening the jaw nut only finger tight. As the cover screws are being tightened and the gasket is being compressed, tighten the jaw nut, maintaining a slight tension between the centering tool and the seal. Then remove the tool, install the starting jaw and tighten it to a minimum of 108 lb. ft. torque.

281, 306, 331, 377, 413 Side Valve Sixes

Check the pulley for burrs or other roughness that might damage the seal before installing the pulley on the cover. With a suitable driver, drive a new seal into the gear cover after coating the outer diameter of the seal with white lead or gasket sealer. Install a new cover gasket and the cover on the engine, being careful not to damage the seal. Install the capscrews and tighten them against the lock washers without compressing the lock washers.

Install the crankshaft pulley and pull it into the cover with the starting jaw nut. The pulley will align the seal and cover. Tighten the cover screws and starting jaw nut alternately until the cover screws are tightened to 15 lb. ft. torque. Then tighten the starting jaw nut to 135 lb. ft. minimum.

V8 Engines

Whenever the cover is removed be sure to install a new oil seal. And when installing the cover, guard against water and oil leaks as suggested in Fig. 28.

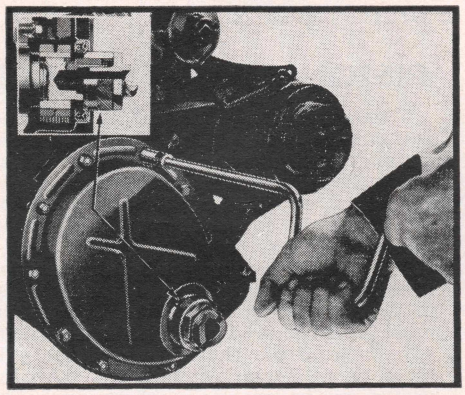

Fig. 27 Special centering tool for timing chain cover oil seal. For 265 and smaller six-cylinder engines

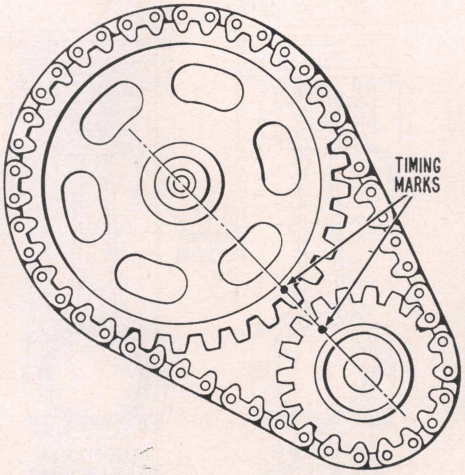

Fig. 29 Valve timing. All six cylinder engines

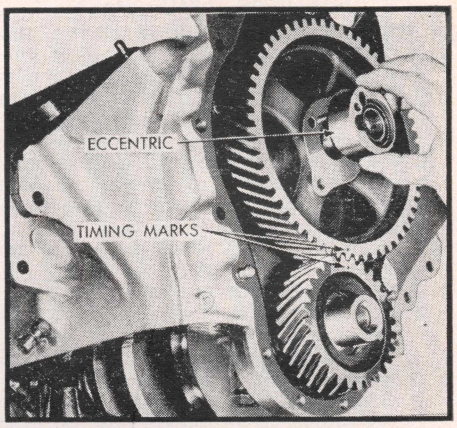

Fig. 31 Valve timing on V8 gear-driven engines. View shows fuel pump eccentric being installed

TIMING CHAIN

Chain-Driven Engines

For correct valve timing, the timing chain and sprockets should be assembled as shown in Figs. 29 and 30.

If there is more than ½″ slack in the chain as indicated in Fig. 29, replace the chain.

TIMING GEARS

Gear-Driven Engines

For correct valve timing, the timing marks on the camshaft and crankshaft gears should be matched. Fig. 31 shows the installation on V8 engine.

CAMSHAFT & BEARINGS

Side Valve Sixes

All camshaft bearings (except the rear) are removable. Replacement is usually performed when the engine is removed for overhaul. If the bearing clearance is excessive, finished bearings which require no reaming, scraping or burnishing, are available provided the proper tool, which draws all bearings into place at one time, is used.

The desired camshaft bearing clearance is .002-.004″. To measure bearing wear, attach a dial indicator to the block with the plunger of the indicator resting on the camshaft nearest a bearing. Pry the shaft to and from the indicator so that this movement will be shown on the indicator. Check all bearings in the same manner. If the clearance exceeds .004″, a new camshaft may be installed (for test purposes only) to recheck the bearings. With the new camshaft installed, clearance should not exceed .002″. If it does, replace the bearings.

If bearings replacement is necessary, remove the fan drive pulley or vibration damper and timing chain or gear case cover. Lift the valves (if installed) and tappets and hold them up with clothespins, Fig. 31A, or other suitable means. (On engines with removable tappet guide brackets, remove the brackets and tappets.) Pull out the camshaft.

Camshaft end play is controlled by a thrust plate behind the camshaft gear or sprocket. End play should be held to .006″ and can be measured with a feeler gauge between the camshaft hub and thrust plate. If end play is excessive, press off the thrust plate and install a new one.

V8 Engines

If camshaft bearings are to be replaced the engine should be removed from the chassis and the crankshaft taken out in order that any chips or foreign matter may be removed from the oil passages.

Drive out the camshaft rear welch plug. Special equipment is required to remove and install camshaft bearings. This tool pulls out all the bearings at once and installs the new bearings at one time.

When installing bearings, be sure the oil holes in the bearing line up with the oil holes leading to the main bearings.

Install a new welch plug in the rear of the block. Install the thrust plate on the camshaft and press on the hub and key. The hub is properly installed when a feeler gauge .002-.006″ can be inserted between the hub and thrust plate.

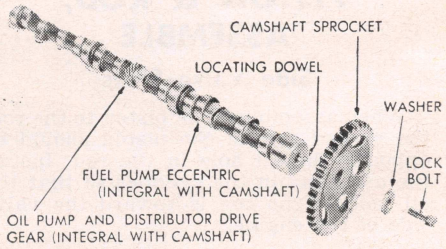

Fig. 31A Camshaft assembly. Overhead valve six

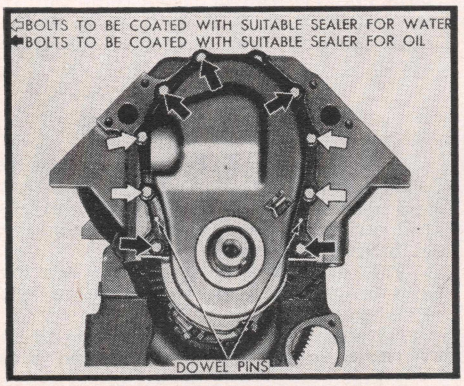

Fig. 28 Installing chain case cover. V8 chain-driven engines

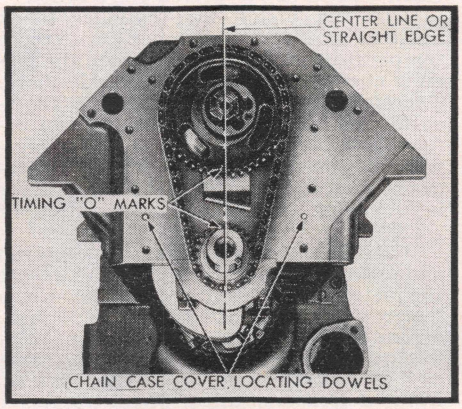

Fig. 30 Valve timing on V8 chain-driven engines

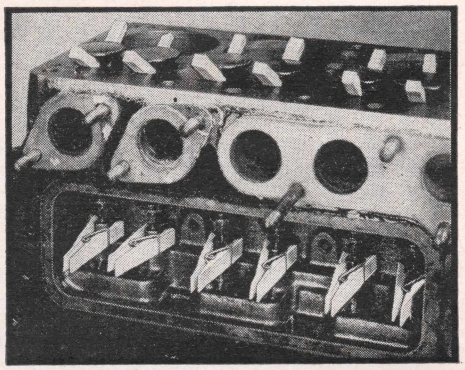

Fig. 32 Method of holding up valves and tappets for camshaft removal on side valve chain-driven sixes

Overhead Valve Sixes

The camshaft is supported by four precision type, steel-backed, babbitt-lined bearings. Rearward thrust is taken by the rear face of the sprocket hub, contacting the front of the engine block.

The camshaft, Fig. 32, can be removed after removing the grille, radiator and timing chain. To remove the camshaft bearings the torque converter or flywheel must also be removed.

1. Remove valve lifters, oil pump and distributor.
2. Slide camshaft out of engine.
3. Remove welch plug back of rear camshaft bearing.
4. Remove bearings with suitable puller equipment.
5. Install new bearings, being sure the oil holes in bearings line up with corresponding oil holes in crankcase.

PISTONS & RODS, REMOVE

After removing the cylinder head and oil pan, examine the cylinder bores above the ring travel area. If the bores are worn so that a shoulder or ridge exists at this point, remove the ridge with a ridge reamer to avoid damaging rings or cracking ring lands of pistons during removal.

Remove the connecting rod caps and push the pistons and rods out of the cylinders, using care to prevent rod bolts from nicking crankshaft journals. Make sure rods and pistons are properly numbered so they can be reinstalled in the proper cylinders. It is advisable to install caps on rods to avoid mixing parts.

PISTON & ROD, ASSEMBLE

Side Valve Sixes

When assembling the piston to the rod, the slotted side of the piston should be opposite the oil hole in the rod. Install the assembly in the cylinder so that the oil hole in the rod is toward the valve side of the engine.

Overhead Valve Six

Piston and rod assemblies must be installed with the notch on the piston head toward the front of the engine, and the oil hole in the connecting rod toward the manifold side of the engine.

All V8 Engines

When installing piston and rod assemblies in the cylinders, the compression ring gaps should be diametrically opposite one another and not in line with the oil ring gap. The oil ring expander gap should be toward the outside of the "V" of the engine. The oil ring gap should be turned toward the inside of the engine "V".

Immerse the piston head and rings in clean engine oil and, with a suitable piston ring compressor, insert the piston and rod assembly into the bore. Tap the piston down into the bore, using the handle of a hammer.

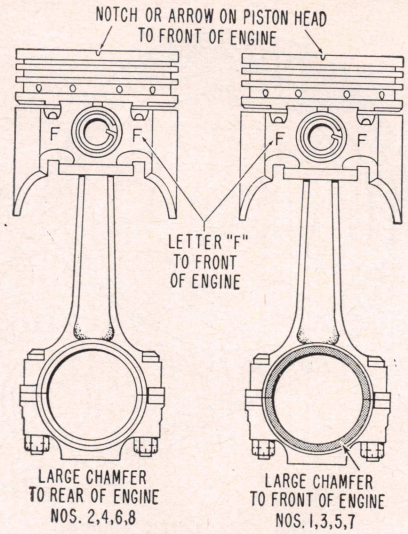

Fig. 32A Correct assembly of pistons and rods. V8 engines

Assemble and install the pistons and rods as shown in Fig. 32A.

PISTONS, REPLACE

Before a honing or boring operation is started, measure all new pistons with a micrometer at points exactly 90 degrees away from the piston pin. Then select the smallest piston for the first fitting. The slight variation usually found between pistons in a set may provide for correction in case the first piston is fitted too free.

It is very important that refinished cylinder bores are trued up to have not more than .0005" out-of-round or taper. Each bore must be final honed to remove all stone or cutter marks and provide a smooth surface. During final honing, each piston must be fitted individually to bore in which it will be installed and should be marked to insure correct installation.

After final honing and before the piston is checked for fit, each bore must be thoroughly washed to remove all traces of abrasive and then dried thoroughly. The dry bore should then be brushed clean with a power-driven fibre brush.

Both the piston and cylinder block must be at the same temperature (room temperature of 70 degrees) when the pison is checked for fit in the cylinder bore. Therefore, the cylinder should be allowed to cool after boring or honing and before the piston fit is checked. This is important because a difference of 10 degrees between the temperature of parts is sufficient to produce a variation of .0005".

With the piston rings and pin removed and cylinder wall and piston clean, insert the piston upside down in the bore. Use a feeler ½" wide which is long enough to extend the full length of the piston. The thickness of the feeler should be the same as the clearance given in the *Pistons, Rings & Bearings* table. With the feeler hooked to a spring scale, a pull of 5 to 10 lbs. should be required to pull the feeler past the piston.

PISTON RINGS, REPLACE

When new rings are to be installed without reboring cylinders, the glazed cylinder wall should be slightly dulled, but without increasing the bore diameter. This is done with a "Glaze-buster" or with a hone equipped with the finest grade of stones.

New piston rings must be checked for clearance in piston grooves and for gap in cylinder bores. The latter operation must be measured with the ring about two inches from the bottom of the cylinder bore to which it is fitted. An inverted piston can be used to push the rings down to this position. Cylinder bores and piston grooves must be clean, dry and free from carbon and burrs.

Check the clearance of each ring in its piston groove by installing the ring and then inserting feeler gauges *under* the ring. Any wear that occurs in the piston groove forms a step or ridge at the inner portion of the lower land. If the feeler gauge is inserted above the ring, the ring may rest on the step instead of on the worn portion of the lower land, and a false measurement of clearance may result.

If the piston grooves have worn to the extent that relatively high steps or ridges exist on the lower lands, the piston should be replaced because the steps will interfere with the operation of the new rings and ring clearances will be excessive. Piston rings are not furnished in oversize widths to compensate for ring groove wear.

PISTON PINS, REPLACE

Overhead Valve Six

Piston pins should be a very light thumb press fit in the piston with the parts at normal room temperature (70°). Piston pins are supplied in standard size only. If excessive clearance is noted, both piston and pin should be replaced.

V8's and Side Valve Sixes

The fit of both the piston and connecting rod should be a tight thumb press fit with the parts at normal room temperature.

When using an expansion reamer to fit piston pins, start off by taking a very light cut. Try the fit. Then ream and try the fit again until the pin can be pushed into the rod and piston as described above.

ROD BEARINGS

Connecting rod bearings can be replaced without removing the piston and rod assemblies merely by taking off the rod cap and replacing the upper and lower bearing halves.

The clearance between the bearings and crankshaft can be measured with Plastigage as follows:

1. Remove bearing cap and wipe oil from crankshaft journal and bearing.
2. With crankpin at approximately

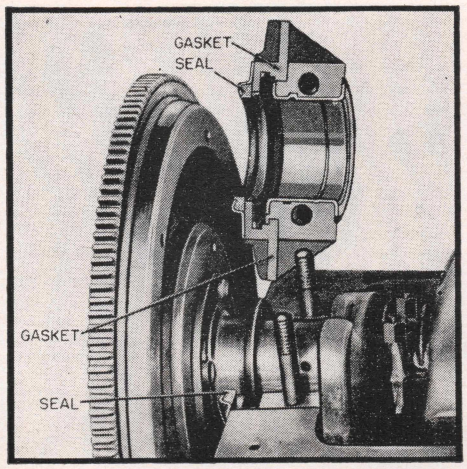

Fig. 33 Crankshaft rear oil seals. Six-cylinder engines

bottom dead center, place a piece of Plastigage in the center of the bearing.

3. Reinstall the bearing cap and tighten the bolts to the torque value given in the *Engine Tightening* table.
4. Remove the bearing cap again and check the bearing clearance by measuring the width of the flattened Plastigage. The measuring strip is supplied in the same envelope which contains the Plastigage.

MAIN BEARINGS

V8's & Overhead Valve Sixes

Caution—Main bearing clearance can be checked with Plastigage in the same manner described for rod bearings. If bearings are measured with the engine in the chassis, the crankshaft must be supported in order to take up clearance between the upper bearing insert and crankshaft journal. This can be done by tightening bearing caps of adjacent bearings with .005″ to .015″ cardboard, (such as a calling card) between lower bearing shell and journal. Use extreme care when this is done to avoid unnecessary strain on the crankshaft or bearings or a false reading may be obtained. Do not rotate crankshaft while Plastigage is installed. *Be sure to remove cardboard.* To install new bearings, proceed as follows:

1. Remove bearing cap and worn lower shell.
2. Rotate crankshaft in normal direction to turn upper bearing shell out of crankcase. Use a cotter pin with a flattened head or the special tool made for the purpose in the crankshaft oil hole, to contact the bearing and force it out.
3. Place a new upper shell on the crankshaft journal with the locating notch in the correct position and rotate the shaft to turn the bearing in place.
4. Install the lower bearing shell in the cap.
5. Tighten all cap nuts to the torque value given in the *Engine Tightening* table.

Side Valve Sixes

Main bearings can be replaced after removal of the oil pan. Both standard and undersize bearings are available for service replacement.

Never use a new bearing half with an old bearing half. Never file or shim original bearing caps in an attempt to fit bearings.

To install a new set of bearings, proceed as follows:

1. Remove oil pan, clutch housing pan and oil suction pipe.
2. Disconnect chain case cover from the oil pan seal and remove oil pan gasket seal plate.
3. Loosen bearing caps slightly.
4. Remove one cap at a time and replace both upper and lower bearing shells.
5. Before installing bearings, be sure crankshaft is not nicked or scored.
6. Measure clearance between bearing and crankshaft when installing either old or new bearings.
7. Plastigage may be used to measure clearance. Lacking Plastigage, however, coat a piece of .0015″ brass shim stock (½″ wide and 1″ long) with oil and place it between the bearing and crankshaft.
8. Install the bearing cap and draw it up tight.
9. If the clearance is not excessive, there will be a slight drag when the crankshaft is turned.

CRANKSHAFT OIL SEAL, REPLACE

Side Valve Sixes

Locate the seals and gaskets carefully before the rear main bearing cap is installed, Fig. 33. To replace the upper seal, it is necessary to remove the flywheel.

V8's & Overhead Valve Six

A braided oil seal is pressed into the upper and lower grooves behind the rear main bearing. Directly in front of this seal is an oil slinger which deflects the oil back into the oil pan. Should the lower half of the seal become damaged during servicing, replacement can be made as follows:

With the bearing cap and lower bearing half removed, install a new seal so that both ends protrude above the cap. Tap the seal down into position and roll it snugly in its groove with a smooth rounded tool. Then cut off the protruding ends of the seal with a sharp knife or razor blade.

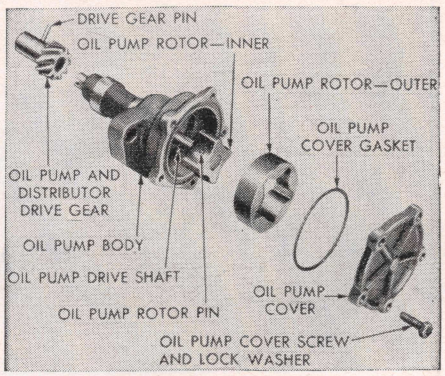

Fig. 34 Oil pump on six-cylinder engines

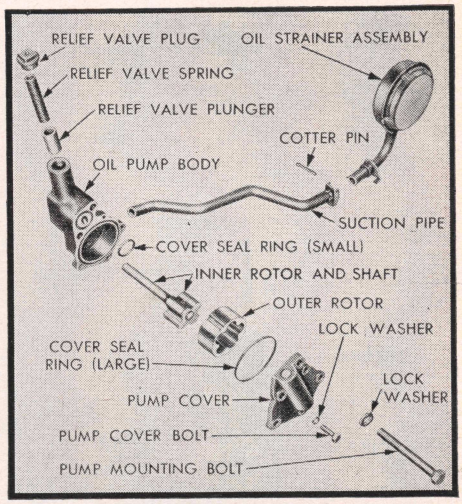

Fig. 35 Oil pump. Typical of all V8 engines

OIL PUMP REPAIRS

Side Valve Sixes

External Mounting Type—To remove the pump, first remove the distributor cap and rotate the engine until the distributor rotor is in firing position for No. 1 cylinder. Keep the engine in this position while the pump is off. The pump may then be removed from the engine.

To disassemble the pump, Fig. 34, remove the cover and gasket. Hold a hand over the cover opening and with the pump upside down, turn the shaft until the outer rotor slips out. Drive out the pin securing the drive gear to the shaft, press the shaft out of the gear and slide the shaft and inner rotor out of the body.

Before installing the pump, see whether the distributor rotor is in No. 1 firing position. Then after installing the pump, check and set the ignition timing.

Internal Mounted Type—Remove the oil pan to reach the oil pump. Unfasten the pump from the engine and service it in same manner as the externally-mounted pump.

V8 Engines

After removing the pump from the engine it should be disassembled, cleaned and inspected for wear or damage, Fig. 35.

1. Remove the cotter pin holding the oil strainer to the oil suction pipe. Then remove the pipe from the pump body.
2. Remove the pump cover and discard the oil seal ring.
3. Remove pump rotor and shaft and lift out rotor body.
4. Remove oil pressure relief valve plug and lift out the spring and plunger.
5. Wash all parts in cleaning solvent and inspect carefully for damage or wear.

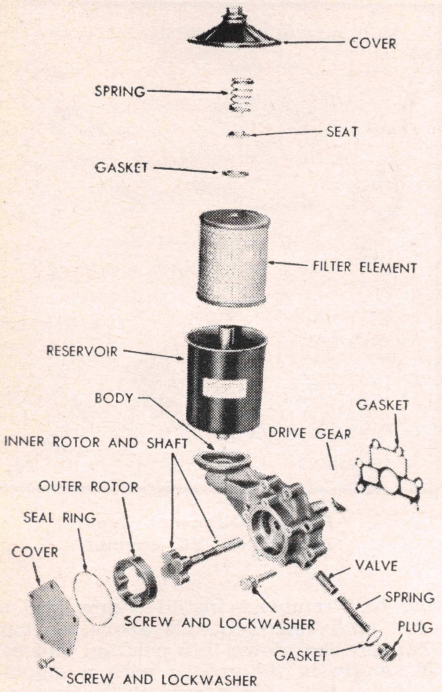

Fig. 35A Oil pump and filter. Overhead valve six

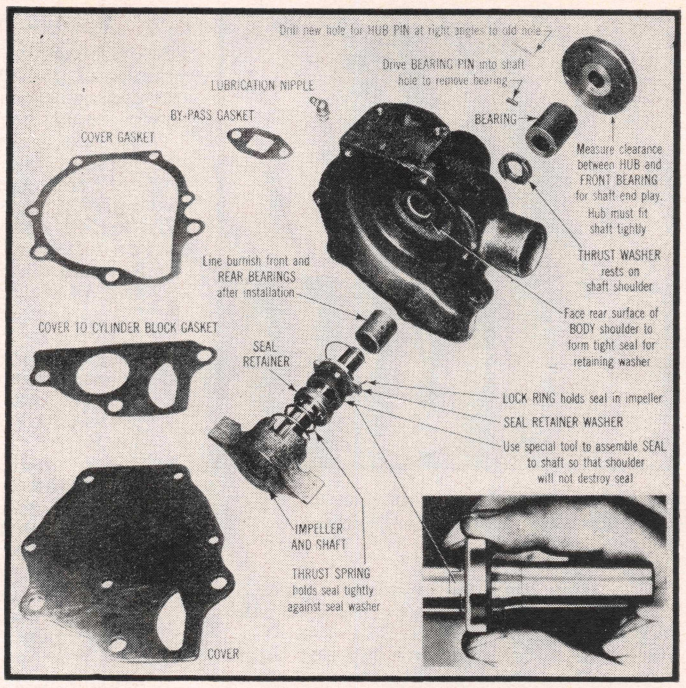

Fig. 36 Bushing type water pump. Light duty six-cylinder engines

6. The mating face of the oil pump cover should be smooth. If it is scratched or grooved, the cover should be replaced with a new one.
7. Check for excessive cover-to-rotor wear by laying a straight edge across the cover surface. If a .0015″ feeler gauge can be inserted between cover and straight edge, the cover should be discarded and a new one installed.
8. Measure the diameter and thickness of the rotor body with a micrometer. If the rotor body measures less than .998″ and the diameter less than 2.244″, install a new rotor body.
9. Measure the thickness of the pump rotor. If it measures less than .998″, a new rotor should be installed.
10. Slide rotor body and rotor into pump body and then place a straight edge across the face of the pump body between the bolt holes. If a feeler gauge of more than .004″ can be inserted between the rotors and straight edge, install a new pump body.
11. Remove the pump rotor and shaft, leaving rotor body in pump cavity. Press rotor body to one side with the fingers and measure the clearance between rotor and pump bodies. If it is more than .012″, install a new pump body.
12. Check the clearance between the pump rotor and rotor body. If the measurement is more than .010″, install a new pump rotor and rotor body.
13. Check the oil pump relief valve plunger for scoring and free operation in its bore. If the plunger is scored, install a new one.
14. When assembling the pump, be sure to use a new oil seal ring between the cover and body. Tighten cover bolts

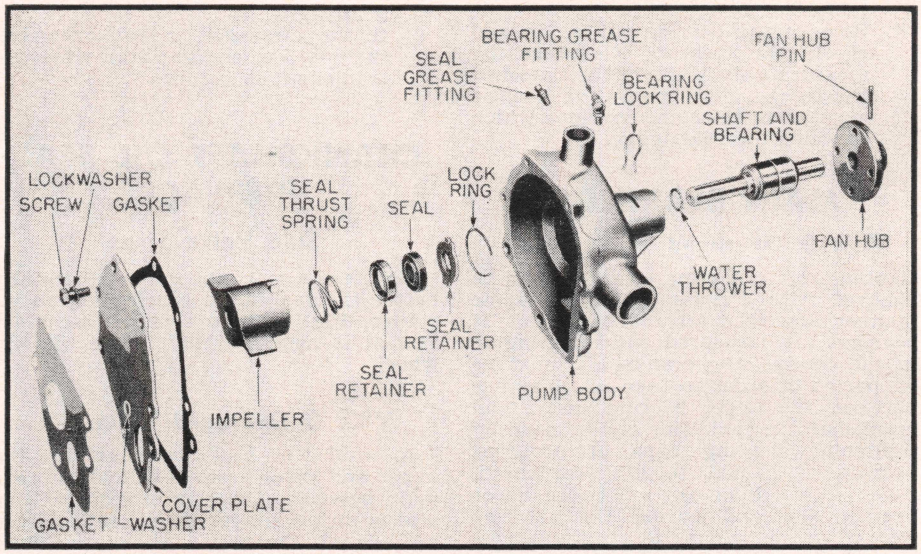

Fig. 37 Water pump with integral bearing and shaft. Six-cylinder engines

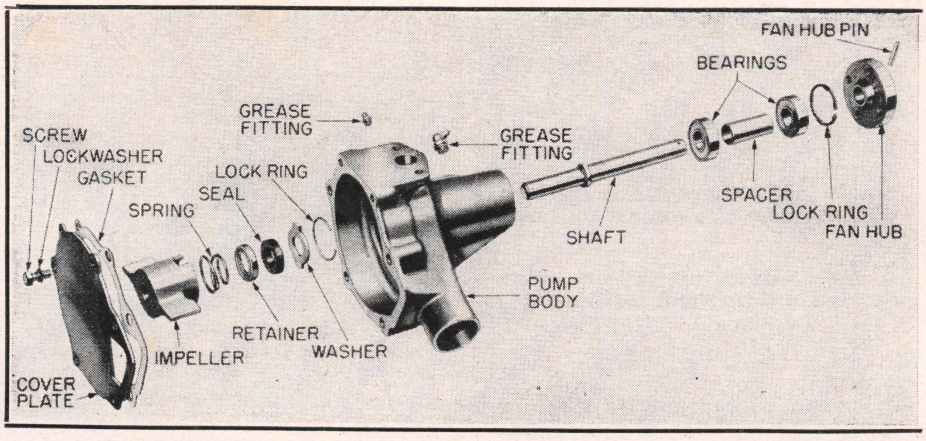

Fig. 38 Water pump with removable bearings. Six-cylinder engines

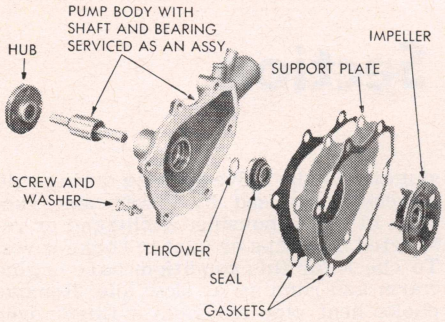

Fig. 40 Water pump. Overhead valve six

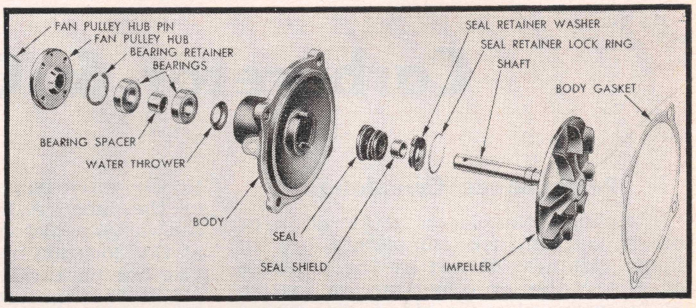

Fig. 39 Water pump with removable bearings. Typical of all V8 engines

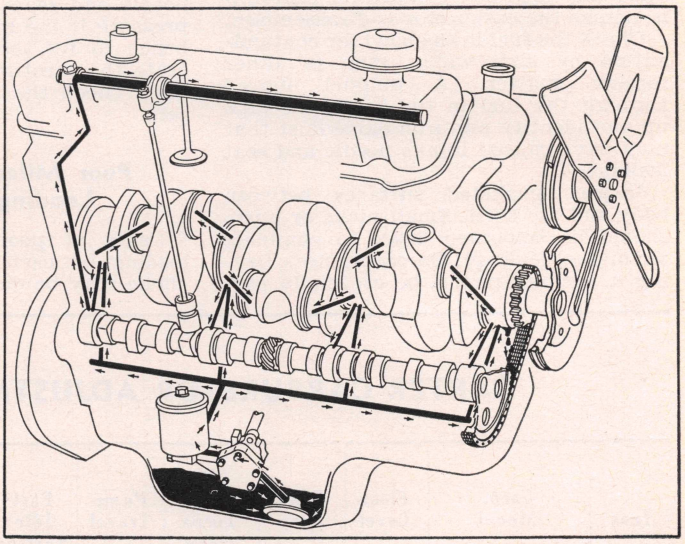

Lubrication diagram for Slant Six engines

to a torque of 10 lbs. ft.

15. Prime the pump. Then place a new oil seal ring in the pump mounting face. Install oil pump and strainer and fasten the pump in position, tightening the bolts with a torque wrench to 35 lbs. ft.

Overhead Valve Six

Remove oil pump attaching bolts and remove pump and filter assembly from side of engine. When installing the pump tighten the attaching bolts to 200 inch lbs.

Refer to Fig. 35A and remove the pump cover seal ring. Press off the drive gear, supporting the gear to keep load off aluminum body. Remove rotor and shaft and lift out outer pump rotor. Remove oil pressure relief valve plug and lift out spring and plunger.

Inspection

1. The rotor contact area and the bores of the shaft and valve in the pump body should be smooth, free from scratches, scoring or excessive wear.
2. The pump cover should be smooth, flat and free from scoring or ridges. Lay a straightedge across the cover. If a .0015″ feeler gauge can be inserted under the straightedge, the cover should be replaced.
3. All surfaces of the outer rotor should be smooth and uniform, free from ridges, scratches or uneven wear. Discard a rotor less than .649″ thick and/or less than 2.469″ in diameter.
4. The inner rotor and shaft assembly should be smooth, free from scoring and uneven wear. Discard rotors less than .649″ thick.
5. Place outer rotor in pump body and measure clearance between rotor and body. Discard pump body if clearance is more than .012″.
6. Install inner rotor and shaft in pump body. Shaft should turn freely but without side play. If clearance between rotor teeth is more than .010″, replace both rotors.
7. Measure rotor end clearance. If feeler gauge of more than .004″ can be inserted between straightedge and rotors, install a new pump body.
8. The oil pressure relief valve should be smooth, free from scratches or scoring, and should be a free fit in its bore.
9. Relief valve springs are painted either gray, red or brown to denote free lengths of $2\frac{3}{16}$, $2\frac{19}{64}$ and $2\frac{25}{64}$ inches. Rather than change the length, replace a spring with one of the same color.

WATER PUMP REPAIRS

Figs. 36 to 39 illustrate the various type water pumps used on these engines. When servicing a pump be sure to install the seal parts correctly.

Inspect the face of the pump body against which the sealing washer turns. This surface should be smooth and free of scores. Reface with a suitable tool if necessary. Discard the pump impeller if it is corroded or loose on the shaft.

IGNITION TIMING

If a timing light is to be used to set ignition timing, disconnect the vacuum advance pipe to the carburetor and place a piece of tape over open end of pipe. *This is important as carburetor trouble can affect timing adjustments.*

Lacking a power timing light, an accurate method of setting ignition timing with the engine stopped is with the aid of a jumper light. Be sure to use a light bulb that corresponds with the system voltage of the vehicle.

1. Remove distributor cap and rotor and see that the breaker gap is set according to specifications.
2. Rotate engine until No. 1 cylinder is at the ignition timing point as indicated by the timing pointer and timing mark being lined up with each other.
3. Connect the jumper light between distributor ignition terminal and ground.
4. Turn on ignition switch.
5. Loosen distributor and turn it in the direction of normal rotation until the points just close (light out). Then slowly turn distributor in the opposite direction just to the exact point that the light goes on. Tighten distributor in this position.

Carburetor & Governor Section

Performance Complaints

Flooding, stumble on acceleration or other performance complaints are in many instances caused by the presence of dirt, water or other foreign matter in the carburetor. To aid in diagnosing the cause of the complaint, the carburetor should be carefully removed from the engine without draining the fuel from the bowl. The contents of the fuel bowl may then be examined for contamination as the carburetor is disassembled.

Check the fuel in the bowl for contamination by dirt, water, gum or other foreign matter. A magnet moved through the fuel in the bowl will pick up and identify any iron oxide dust that may have caused intake needle and seat leakage.

Inspect gasketed surfaces between body and air horn. Small nicks or burrs should be smoothed down to eliminate air or fuel leakage. On carburetors having a vacuum piston, be especially particular when inspecting the top surface of the inner wall of the bowl around the vacuum piston passage. A poor seal at this location may contribute to "cutting-out on turns" complaint.

Fill the carburetor bowl with clean fuel before installing on manifold. This will help prevent dirt trapped in the fuel system from being dislodged by the free flow of fuel as the carburetor is primed. The operation of the floats and intake needle and seats may be checked under pressure if the fuel pump is used at the bench to fill the carburetor bowl. Operate the throttle several times and visually check the discharge of the pump jets.

Poor Mileage and Engine Loading Complaints

Cases of poor mileage and engine loading on carburetors with automatic choke may be due in many instances to sluggish choke valve opening during cold driveaway, caused by insufficient vacuum in choke housing, a plugged or restricted heat pipe or inlet in choke cover. To check for this condition, have engine warm and running at slow idle. Remove choke heat pipe and hold a finger over the heat inlet hole (hole is on choke housing on some carburetors). If there is little or no vacuum pull on the finger, check the choke housing for gasket leaks or plugged vacuum passages. If these are OK, check choke vacuum passages in carburetor between choke housing and manifold.

Dirty or Rusty Automatic Choke Housing

In cases where it is found that the interior of the choke housing is dirty, gummed or rusty while the carburetor itself is comparatively clean, look for a punctured or eroded manifold heat tube (if one is used).

CARTER CARBURETOR ADJUSTMENTS

Year	Carb. Model	Float Level	Float Drop	Idle Screw Turns Open	Pump Travel	Fast Idle Setting	Unloader Setting	Choke Setting	Dashpot Setting
1963	BBS-3491S	7/32 (1)	None	1	27/32 (4)	None	None	None	None
1963	AFB-3452S	7/32 (11)	3/4 (12)	1 1/2	7/16 (13)	None	None	None	None
1962	BBS-3272S	7/32 (1)	None	1	27/32 (4)	None	None	None	None
1962	BBS-3273S	7/32 (1)	None	1	27/32 (4)	None	None	None	None
1962	BBS-3274S	7/32 (1)	None	1	27/32 (4)	None	None	None	None
1962	BBS-3275S	7/32 (1)	None	1	27/32 (4)	1600 (14)	3/16 (6)	Index	None
1962	BBS-3276S	7/32 (1)	None	1	27/32 (4)	1600 (14)	3/16 (6)	Index	None
1962–63	BBS-3277S	7/32 (1)	None	1	27/32 (4)	None	None	None	None
1962	BBS-3278S	7/32 (1)	None	1	27/32 (4)	None	None	None	None
1962	BBS-3279S	7/32 (1)	None	1	27/32 (4)	None	None	None	None
1962–63	BBS-3280S	7/32 (1)	None	1	27/32 (4)	1600 (14)	3/16 (6)	Index	None
1962–63	BBS-3281S	7/32 (1)	None	1	27/32 (4)	1600 (14)	3/16 (6)	Index	None
1962–63	BBD-2905SA	5/32 (1)	None	1	1 3/32 (2)	None	None	None	None
1961	BBS-3000S	7/32 (1)	None	1	27/32 (4)	None	None	None	None
1961	BBS-3001S	7/32 (1)	None	1	27/32 (4)	None	None	None	None
1961	BBS-3110S	7/32 (1)	None	1	27/32 (4)	None	None	None	None
1961	BBS-3111S	7/32 (1)	None	1	27/32 (4)	1600 (14)	3/16 (6)	Index	None
1961	BBS-3112S	7/32 (1)	None	1	27/32 (4)	1600 (14)	3/16 (6)	Index	None
1961	BBS-3121S	7/32 (1)	None	1	27/32 (4)	None	None	None	None
1961	BBS-3135S	7/32 (1)	None	1	27/32 (4)	None	None	None	None
1961	BBS-3136S	7/32 (1)	None	1	27/32 (4)	None	None	None	None
1961	BBS-3137S	7/32 (1)	None	1	27/32 (4)	None	None	None	None
1961	BBS-3138S	7/32 (1)	None	1	27/32 (4)	1600 (14)	3/16 (6)	Index	None
1961	BBS-3139S	7/32 (1)	None	1	27/32 (4)	1600 (14)	3/16 (6)	Index	None
1960–62	AFB-2906S	7/32 (11)	3/4 (12)	1/2–1 1/2	7/16 (13)	None	None	None	None
1958–60	BBR2-2335SA	5/64 (8)	None	1–1 1/2	None	None	None	None	None
1957–60	BBR2-2681S	5/64 (8)	None	1–2	13/32 (9)	None	None	None	None
1954	BBD-907S	(3)	None	1/4–1 1/4	57/64 (2)	None	None	None	None
1955–56	BBD-2229S	7/32 (1)	None	1/4–1 1/4	1 (2)	None	None	None	None
1955–56	BBD-2420S	7/32 (1)	None	1/4–1 1/4	1 (2)	None	None	None	None

CARTER NOTES

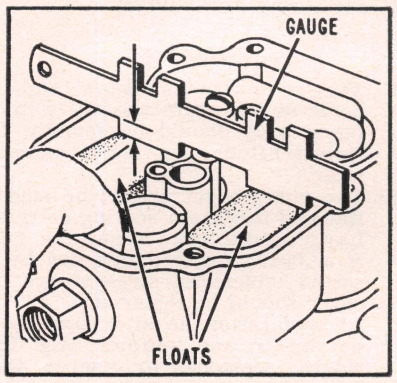

Fig. (1)—BBD and BBS float level.

(2)—With throttle valves closed and pump connector rod in middle hole in throttle lever the distance between top of bowl cover to top of plunger shaft should be as listed. Adjust by bending pump connector rod at lower angle.

(3)—See (1). Flat top floats 9/32", curved top floats 7/32".

(4)—With throttle valve fully closed and with throttle connector rod in center hole of throttle lever the distance from top of bowl cover to top of plunger shaft should be as listed. Adjust by bending throttle connector rod at lower angle.

CARTER NOTES continued

⑤—Remove choke thermostat, housing and baffle plate. Crack throttle and hold choke valve fully closed. Then close throttle. This will allow fast idle cam to revolve to fast idle position. There should now be the clearance listed between throttle valve and carburetor bore (side opposite idle port). Adjust by bending choke connector rod at lower angle.

⑥—This adjustment must be made after the fast idle setting. Hold throttle valve wide open and close choke valve as far as possible without forcing. There should now be the clearance listed between upper edge of choke valve and inner wall of air horn. Adjust by bending arm on choke trip lever.

⑦—Maximum dashpot action is obtained by loosening lock nut and adjusting dashpot unit so that dashpot plunger shaft can be moved inward the distance listed with throttle valve fully closed.

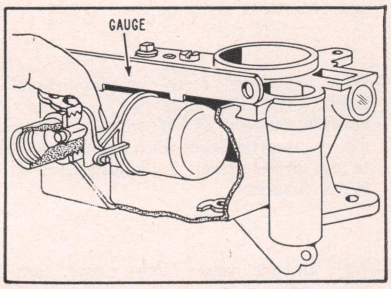

Fig. ⑧—BB and BBR2 float level. Place .050" gauge between spring loaded pin and float lip when checking float level on units having springloaded needle.

⑨—With air horn removed, back out throttle adjusting screw and be sure pump link is in center of throttle shaft arm. Distance pump should travel from fully closed throttle position to fully open position should be as listed. Adjust by bending horizontal portion of pump lifter link.

⑩—Adjusting screw (in top of bowl cover) should be opened 5 turns listed from the closed position.

CARTER CARBURETOR ADJUSTMENTS continued

Year	Carb. Model	Float Level	Float Drop	Idle Screw Turns Open	Pump Travel	Fast Idle Setting	Un-loader Setting	Choke Setting	Dash-pot Setting
1957–59	BBD-2550S,SA	9/32①	None	1/4–1 1/4	1②	None	None	None	None
1957–59	BBD-2620S,SA	9/32①	None	1/4–1 1/4	1②	None	None	None	None
1960–61	BBD-2905S	9/32①	None	1/4–1 1/4	1②	None	None	None	None
1955–57	BBS-2226S	7/32③	None	1/2–1 1/2	27/64④	.024⑤	9/64⑥	Index	3/32⑦
1955–56	BBS-2227S	9/32③	None	1/4–1	55/64④	None	None	None	None
1955–57	BBS-2288S	7/32③	None	1/2–1 1/2	27/32④	.024⑤	9/64⑥	Index	None
1956–57	BBS-2416S	7/32③	None	1/2–1 3/4	27/32④	.018⑤	9/64⑥	Index	None
1956–59	BBS-2421S,SA	9/32③	None	1/4–1	55/64④	None	None	None	None
1957–60	BBS-2658S	7/32③	None	1/2–1 1/2	27/32④	.018⑤	9/64⑥	Index	3/32⑦
1957–60	BBS-2659S	7/32③	None	1/2–1 1/2	27/32④	.018⑤	9/64⑥	Index	3/32⑦
1952–53	BB-DTE1	5/64⑧	None	1/2–1 1/2	11/32⑨	None	None	None	None
1952–54	BB-DTE2	5/64⑧	None	1/2–1 1/2	11/32⑨	None	None	None	None
1952–53	BB-DTG1	5/64⑧	None	1/2–1 1/2	11/32⑨	None	None	None	⑩
1953–54	BB-DTL1	5/64⑧	None	1/2–1 1/2	11/32⑨	None	None	None	None
1953–54	BB-DTL2	5/64⑧	None	1/2–1 1/2	11/32⑨	None	None	None	None
1954–60	BB-E7S1	5/64⑧	None	1/2–1 1/2	None	None	None	None	None
1953–54	BB-E7R1	5/64⑧	None	1/2–1 1/2	13/32⑨	None	None	None	⑩
1952–53	BB-E7T1	5/64⑧	None	1/2–1 1/2	13/32⑨	None	None	None	None
1952–60	BB-E7T2	5/64⑧	None	1/2–1 1/2	13/32⑨	None	None	None	None
1952–53	BB-E7U1	5/64⑧	None	1/2–1 1/2	13/32⑨	None	None	None	None
1952–53	BB-E7U2	5/64⑧	None	1/2–1 1/2	13/32⑨	None	None	None	None
1953–56	BB-E9G1	5/64⑧	None	1/2–1 1/2	13/32⑨	None	None	None	None
1953–56	BB-E9H1	5/64⑧	None	1/2–1 1/2	13/32⑨	None	None	None	None
1953–54	BB-E9J1	5/64⑧	None	1/2–1 1/2	13/32⑨	None	None	None	⑩
1953–54	BB-E9K1	5/64⑧	None	1/2–1 1/2	13/32⑨	None	None	None	None
1954	BB-E9X1	5/64⑧	None	1/2–1 1/2	13/32⑨	None	None	None	None
1953–59	BB-E9Y1	5/64⑧	None	1/2–1 1/2	13/32⑨	None	None	None	None
1952–56	BB-6N1	3/64⑧	None	1/2–1 1/2	13/32⑨	None	None	None	None
1952–54	BB-6N2	3/64⑧	None	1/2–1	None	None	None	None	None

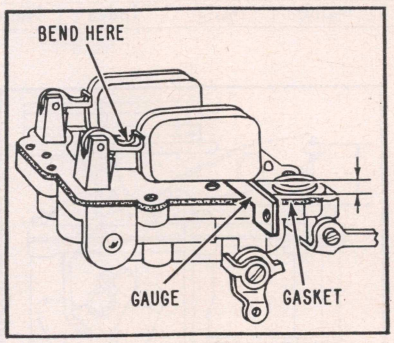

Fig. ⑪—AFB Float Level. When replacing a solid needle and seat with the new resilient seat the float setting should be reduced 1/32".

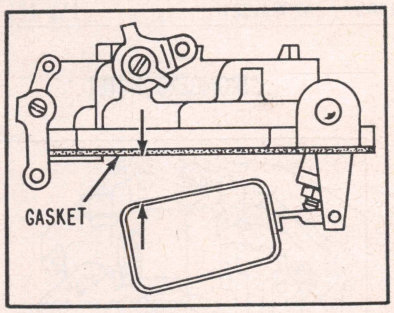

Fig. ⑫—AFB float drop.

⑬—With throttle valves closed, distance from top of air horn to top of pump plunger shaft should be as listed. Adjust by bending pump rod at lower angle.

⑭—Engine hot and screw on second step of fast idle cam.

STROMBERG CARBURETOR ADJUSTMENTS

Year	Carb. Model	Float Level	Idle Screw Turns Open	Pump Travel Setting	Fast Idle Setting	Unloader Setting	Choke Setting	Dashpot Setting
1954	WW3-117	3/16 (1)	3/4–1 1/4	3/4 (2)	None	None	None	None
1955–56	WW3-128	3/16 (1)	1–1 1/2	7/32 (3)	None	None	None	None
1955–56	WW3-134	3/16 (1)	1–1 1/2	7/32 (3)	(7)	.166 (5)	(6)	5/64 (8)
1957	WW3-151	7/32 (1)	1–1 1/2	19/64 (3)	None	None	None	None
1957	WW3-152	7/32 (1)	1–1 1/2	19/64 (3)	None	None	None	None
1957	WW3-153	7/32 (1)	1–1 1/2	19/64 (3)	(9)	.166 (5)	(6)	5/64 (8)
1957	WW3-154	7/32 (1)	1–1 1/2	19/64 (3)	(9)	.166 (5)	(6)	5/64 (8)
1957	WW3-155	7/32 (1)	1–1 1/2	19/64 (3)	(9)	.166 (5)	(6)	5/64 (8)
1958–59	WW3-169	7/32 (1)	1–1 1/2	19/64 (3)	None	None	None	None
1958	WW3-170	7/32 (1)	1–1 1/2	19/64 (3)	(4)	.234 (5)	(6)	5/64 (8)
1958	WW3-171	7/32 (1)	1–1 1/2	19/64 (3)	(4)	.234 (5)	(6)	5/64 (8)
1958	WW3-173	7/32 (1)	1–1 1/2	19/64 (3)	None	None	None	None
1958	WW3-174	7/32 (1)	1–1 1/2	19/64 (3)	None	None	None	None
1959	WW3-175	7/32 (1)	1–1 1/2	19/64 (3)	None	None	None	None
1959	WW3-176	7/32 (1)	1–1 1/2	19/64 (3)	None	None	None	None
1959	WW3-177	7/32 (1)	1–1 1/2	19/64 (3)	(4)	.234 (5)	(6)	5/64 (8)
1959	WW3-178	7/32 (1)	1–1 1/2	19/64 (3)	(4)	.234 (5)	(6)	5/64 (8)
1959	WW3-179	7/32 (1)	1–1 1/2	19/64 (3)	None	None	None	None
1961	WW3-185	7/32 (1)	1 1/4–1 3/8	(11)	None	None	None	None
1960–61	WW3-190	7/32 (1)	1 1/4–1 3/8	19/64 (3)	None	None	None	None
1960	WW3-191	7/32 (1)	1 1/4–1 3/8	19/64 (3)	(10)	15/64 (5)	(6)	None
1960	WW3-192	7/32 (1)	1 1/4–1 3/8	19/64 (3)	(10)	15/64 (5)	(6)	None
1960	WW3-193	7/32 (1)	1 1/4–1 3/8	19/64 (3)	None	None	None	None
1961	WW3-194	7/32 (1)	1 1/4–1 3/8	(11)	None	None	None	None
1961	WW3-195	7/32 (1)	1 1/4–1 3/8	(11)	(10)	15/64 (5)	Index	None
1961	WW3-197	7/32 (1)	1 1/4–1 3/8	(11)	(10)	15/64 (5)	Index	None
1962	WW3-202	7/32 (1)	1 1/4-1 3/8	(11)	None	None	None	None
1962	WW3-203	7/32 (1)	1 1/4-1 3/8	(11)	None	None	None	None
1962	WW3-204	7/32 (1)	1 1/4-1 3/8	(11)	None	None	None	None
1962	WW3-205	7/32 (1)	1 1/4-1 3/8	(11)	13/64 (12)	15/64 (5)	Index	None
1962	WW3-207	7/32 (1)	1 1/4-1 3/8	(11)	13/64 (12)	15/64 (5)	Index	None
1963	WW3-225	7/32 (1)	1 1/4–1 3/8	(11)	None	None	None	None
1963	WW3-226	7/32 (1)	1 1/4–1 3/8	(11)	None	None	None	None
1963	WW3-227	7/32 (1)	1 1/4–1 3/8	(11)	13/64 (12)	15/64 (5)	Index	None

STROMBERG NOTES

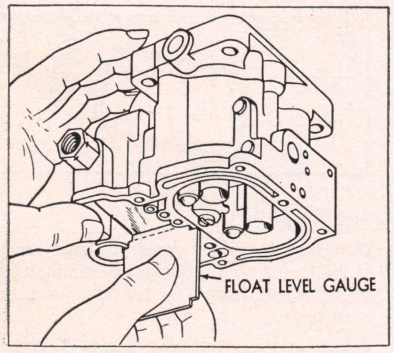

Fig. (1)—WW float level.

(2)—With throttle valves fully closed, distance from top of pump plunger rod to top of air horn should be as listed. Adjust by bending pump connector rod.

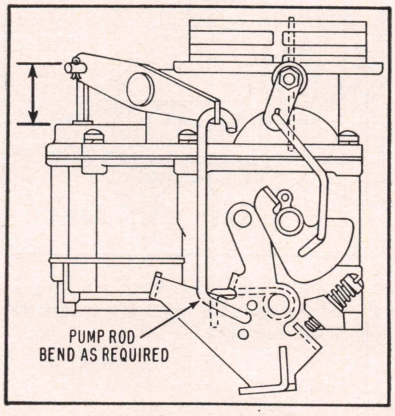

Fig. (3)—With pump connector rod in center hole of throttle lever, back off idle speed screw until throttle valves are fully seated and fast idle adjusting screw is off the fast idle cam. To adjust, bend pump connector rod at the lower angle to obtain the dimension listed.

(4)—Turn idle speed screw out to clear throttle lever tang when throttle valves are closed. Hold throttle valves closed and turn fast idle screw out until it is positioned on high step of fast idle cam. From this position turn fast idle screw in 6½ turns. At this point a $\frac{9}{32}''$ drill should fit between choke valve and air horn wall. Adjust by bending fast idle rod at upper end.

(5)—Hold choke valve lightly closed and open throttle valves wide open. It should now be possible to insert the drill size listed between choke valve and air horn wall. Adjust by bending tang on throttle lever.

(6)—Index mark should be set midway between L and R marks.

(7)—With throttle valves fully closed turn fast idle screw in so it just contacts throttle lever. Then turn screw in 4½ turns on V8's and 5⅛ turns on 6-cyl.

(8)—With idle speed screw set for normal idle speed, there should be the clearance listed between the end of the dashpot plunger and ear on throttle lever when plunger is pushed to end of its travel. To adjust, turn dashpot in its bracket.

(9)—With throttle valves fully closed turn fast idle screw in so it just contacts throttle lever. Then turn screw in 5½ turns.

(10)—With throttle valves closed, turn fast idle adjusting screw out until it rests on high step of fast idle cam. Then turn fast idle screw in three turns. In this position a $\frac{13}{64}''$ drill should fit between edge of choke valve and air horn wall. Adjust by bending fast idle rod.

(11)—Pump travel is automatically correct when bowl vent is properly adjusted. To adjust bowl vent, have throttle valves fully closed, pump rod in medium stroke hole in throttle lever and bowl vent clip in center notch on pump stem. Now a $\frac{5}{64}''$ drill should fit between bowl vent and vent seat. If not, adjust by bending pump rod as required.

(12)—Fast idle cam position adjustment: Turn idle speed adjusting screw out until throttle valves seat in their bores. Position fast idle cam so that fast idle adjusting screw contacts top step of cam with throttle valves seated; it will be necessary to turn out fast idle adjusting screw. To adjust, bend fast idle rod at upper angle until the dimension shown exists between upper edge of choke valve and the bore of the air horn. Engine fast idle speed adjustment: With engine warmed up and running, set engine rpm at 1250 with fast idle adjusting screw resting on top step of cam.

CARTER GOVERNOR

Before making any governor adjustments, the engine must be tuned to the manufacturer's specifications. Run the engine until normal operating temperature is reached.

To adjust the governed speed, remove the large cap screw and gasket, Fig. 1 and with a screwdriver, turn the primary adjusting screw clockwise to decrease engine speed, and counterclockwise to increase engine speed.

Do not turn the screw out beyond the end of the governor housing to the extent that it will interfere with the complete tightening of the screw cap. If the adjusting screw is turned too far out the primary spring can become disengaged from the adjusting screw.

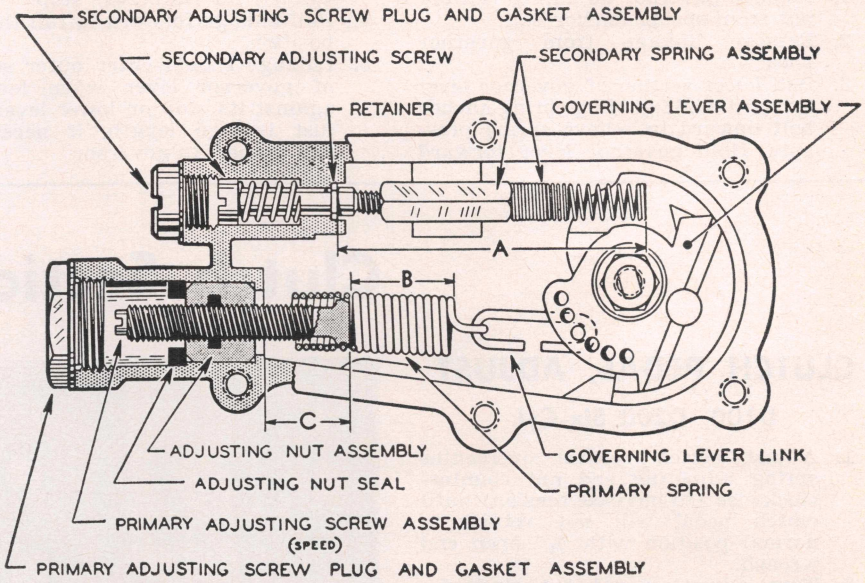

Fig. 1 Carter velocity governor

KING-SEELEY GOVERNOR

This governor, Fig. 2, is mounted between the carburetor and intake manifold and automatically governs the maximum speed at which the engine may be operated.

The gas mixture rushing from the carburetor through the governor throat strikes the offset throttle valve and tends to draw it closed. This action is opposed by a governor spring which is attached to the valve shaft through a cam ribbon and cam. By adjusting the pull of this spring, the governor valve may be made to remain open, and then closed at a predetermined engine speed. Adjustment of the spring pull is accomplished by changing the number of coils operating.

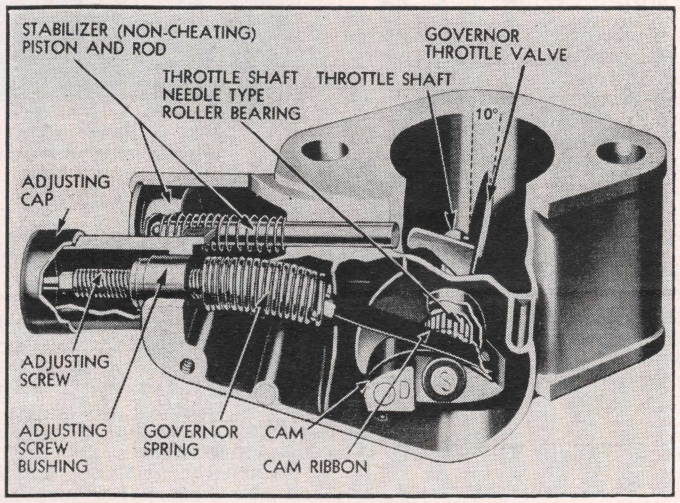

Fig. 2 King-Seeley velocity governor

Governor Adjustment

All governors are calibrated and adjusted in assembly to insure accurate control of the maximum engine speed of the model vehicle for which it is intended. However, there will be occasions when minor adjustments are required to satisfy local conditions where the truck is operating.

To adjust a governor for higher speed, turn the adjusting cap counter-clockwise or to the left; for lower speeds turn the cap to the right or clockwise. One turn on the adjusting screw will change the speed 300-400 rpm or between 4 and 5 mph.

When a more sensitive regulation is desired or if the governor is too sensitive and inclined to surge, correct the adjustment as follows by means of the calibrating nut shown at "A", Fig. 3.

If Governor is too Sensitive—If the governor is too sensitive or on the point of surging, remove the adjusting cap and hexagonal shaft assembly and place the special hollow wrench (A-24283) in position on nut "A". Insert the special adjusting wrench (A-25264) through this wrench and turn the main adjusting screw "B" to the right one turn. (These wrenches are available at King-Seeley Distributors.) With the hollow wrench in the slot of nut "A", turn this nut to the right about ¼ turn. The main adjusting screw "B" must be kept from turning while nut "A" is adjusted.

If Governor is Not Stable—If a more sensitive governor is desired, adjust main screw "B" to the left one turn and, while holding this screw in the new position, turn nut "A" to the left ¼ turn at a time until the desired regulation is obtained. When the adjustment is completed, tap lightly on the end of the hollow wrench so that nut "A" will seat properly.

MECHANICAL GOVERNOR

1960-63

The mechanical governor is mounted on the distributor support housing and is gear driven from the distributor. It is lubricated by engine oil through the restrictor elbow in the governor housing. The tachometer cable is driven by nylon gears at the upper end of the governor shaft. The tachometer gears are sealed away from engine oil and should be cleaned and lubricated with lubricant at intervals.

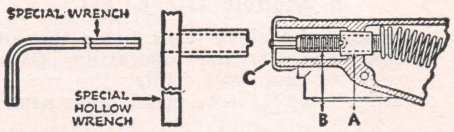

Fig. 3 King-Seeley governor adjustments

Adjustment

Before adjusting the governor for specified engine speed, the linkage to the carburetor should be adjusted to a length which will permit full carburetor throttle opening when the governor lever is full forward.

1. Remove governor adjusting (lower) nut from spring anchor bolt.
2. Remove linkage from governor lever.
3. Pull *lower* section of governor lever forward while guiding spring anchor bolt upward to relieve spring pressure. Hold governor lever forward against its (internal) stop.
4. Pull linkage forward to full throttle position.
5. Linkage should enter outer section of governor lever when lever is against its stop on lower lever. Adjust linkage length, if necessary, and connect to governor.
6. Install nut on spring anchor bolt to approximate original position.
7. Start and run engine until it reaches operating temperature.
8. Adjust tension on governor spring for desired engine rpm. Increasing the tension increases engine speed and vice versa. Tighten jam nut.

Clutch Section

CLUTCH PEDAL, ADJUST

D100, D200 Six-Cyl.

1. Adjust clutch release overcenter spring adjusting end nut counterclockwise (to increase tension) until clutch pedal will not return to normal position with ¾″ open end wrench.
2. Turn adjusting end nut clockwise (to reduce tension) approximately 1½ to 2 turns or until good pedal return is achieved.

All C Series Except Y & YX

The clutch pedal free travel is adjusted by loosening both the lock nuts and rotating the turnbuckle to shorten or lengthen the travel as required. Check the distance of free pedal motion to the following specifications:

⅞″ to 1″ on models G8, H8, J8, K8 and R8.

1¼″ to 1⅜″ on models T8 and V8.

1⅛″ to 1¼″ on all six-cylinder models.

C Series Y & YX

Loosen the lock nut on the clutch pedal stop screw and rotate the stop screw to lengthen or shorten the distance of free travel as required to bring it within the limits of 1¼″ to 1⅜″.

B Models Except DU & EU

Loosen the pedal adjusting screw lock nuts and turn the pedal adjusting screws until the pedal has 1″ to 1⅛″ free movement.

On C.O.E. and WFM models, the adjustment for free pedal movement is made by turning the swivel on the connecting rod between the pedal and operating lever.

B Models DU & EU

Remove the clevis that holds the adjusting rod to the operating lever. Loosen the nut and adjust the rod to obtain 1″ to 1⅛″ free pedal movement.

K & L Models

Loosen the lock nut on the clutch pedal stop screw and rotate the turnbuckle to shorten or lengthen travel as required. Check the free play and adjust as necessary to conform to the following specifications:

1½″ to 1¾″ on 700, 800 and 900 models.

1⅛″ to 1¼″ on all other models.

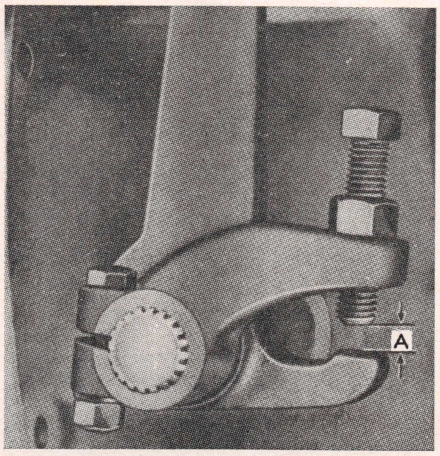

Fig. 1 Heavy duty clutch release bearing adjustment

HYDRAULIC CLUTCH

1959-63

A hydraulic master cylinder and slave cylinder replaces the mechanical linkage. The slave cylinder is connected to and operates the clutch release fork. The master cylinder and slave cylinder are serviced in a similar manner to a brake master cylinder.

When the master cylinder is installed on the dash panel and hydraulic line connected, connect the push rod end to the clutch pedal and adjust as follows:

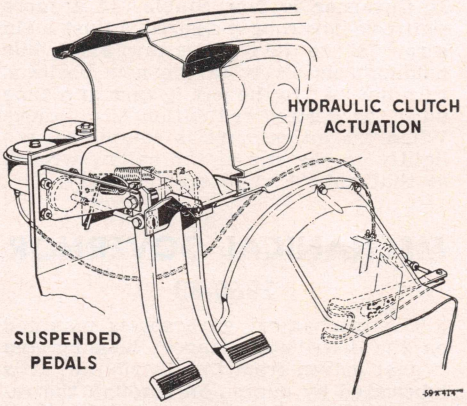

Fig. 2 Hydraulic clutch actuation, 1959-63

Adjust master cylinder push rod so that there is .010″ free play between the push rod and master cylinder piston when the piston is in the fully returned position and when the clutch pedal, Fig. 2, is in its normal at rest position.

Adjustment

1. Inside the cab, adjust clutch pedal free play to ⅛″, which is equal to .010″ clearance between push rod and master cylinder piston.
2. On Light and Medium Duty models, at the slave cylinder, adjust clutch linkage free play at the clutch fork pivot pin to $\frac{3}{16}$″.
3. On Heavy Duty models, adjust the linkage free play at the clutch fork shaft lever to Dimension "A", Fig. 1 (see chart below).
4. Inside the cab, check clutch pedal reserve which should be a minimum of 1″. Pedal reserve is that portion of pedal travel remaining after free play and complete clutch disengagement. *Note: If there is not enough pedal reserve, bleed the clutch hydraulic system to make sure there is no air in the system.*

Clutch Free Play Specs.

The following applies to Heavy Duty models with flywheel housing and master cylinder diameter of 1⅛″.

Clutch Size	Slave Cylinder Diameter	"A", Fig. 1
14″①	1.12″	.069″
14″②	.94″	.093″
14″	.94″	.140″
13″③	1.12″	.093″
13″④	.94″	.125″
15″①	1.12″	.093″
15″②	.94″	.125″

①—All transmissions except Fuller R46.
②—Fuller R46 transmission.
③—All transmissions except Fuller R46 with two plate clutch.
④—Fuller R46 transmission with two plate clutch.

CLUTCH, REMOVE

C-1 & C-3 Models B, C, D, DU, EU, PW, R, T, V

1. Remove transmission.
2. Remove clutch housing pan.
3. Remove clutch release bearing.
4. Mark clutch cover and flywheel to assure proper balance when clutch is installed.
5. Remove clutch cover retaining screws and take out clutch and disc.

C-1 & C-3 Models F, G, H, J, K

1. Remove transmission floor cover.
2. Remove transmission.
3. Remove clutch housing pan.
4. Remove clutch release bearing.
5. Mark clutch cover and flywheel to assure proper balance when clutch is installed.
6. Remove clutch cover retaining screws and take out clutch and disc.

1952-56 Three & Four Speed C, D, DU, F, G, GM, PW

1. Remove transmission.
2. Remove clutch housing pan.
3. Remove clutch release bearing.
4. Mark clutch cover and flywheel to assure proper balance when clutch is installed.
5. Unfasten clutch cover from flywheel and take out clutch and disc.

B-3 & B-4 Models H, HH, J, KA, EU, R, T, V, Y

1. Remove all floor boards.
2. Remove transmission.
3. Remove clutch housing pan.
4. Remove clutch release bearing.
5. Disconnect booster brake control valve linkage at brake pedal, master cylinder and frame bracket. Then remove control valve.
6. Disconnect clutch release fork bracket at clutch housing.
7. Remove clutch release fork flange cap screws and pull release fork with pedal and bushings out of clutch housing far enough to provide clearance for clutch assembly to pass cross shaft clutch release fork.

1957-63

1. Remove the transmission.
2. Remove the clutch housing pan.
3. Remove clutch fork, bearing and sleeve assembly.
4. Mark clutch cover and flywheel to assure proper balance when clutch is installed.
5. Remove clutch cover retaining screws and pull the pressure plate clear of flywheel and, while supporting pressure plate, slide the disc from between flywheel and pressure plate. On some models it may be necessary to rotate the pressure plate to the point of maximum clearance. Then allow plate assembly to drop while tilting the top edge of the clutch cover back to clear the frame crossmember.

CLUTCH, INSTALL

All Models

When installing the clutch, coat the pilot bearing in the end of the crankshaft with wheel bearing grease. Clean the surfaces of the flywheel and pressure plate, making certain no oil or grease remains on these parts. Hold the cover plate and disc in place and insert a special clutch aligning tool or a spare clutch shaft through the hub of the disc and into the pilot bearing in the crankshaft. Bolt the clutch cover loosely to the flywheel, being sure that punch marks previously made are lined up.

To avoid distortion of the clutch cover, tighten the cover bolts a few turns each in progression until all are tight.

Guide the transmission into place, using care to see that the driven disc is not bent. Use a floor jack to support the transmission so that the clutch shaft may be guided through the driven disc safely. Finally, adjust the clutch pedal free travel.

Manual Shift Transmission Section

For Clark, Fuller, New Process, Spicer and Warner transmissions used on Dodge trucks, see the "name" chapter for service procedures and lubricant capacities.

TRANSMISSION, REPLACE

Three Speed Units

Disconnect propeller shaft, speedometer cable, speedometer pinion sleeve, gearshift control rods and hand brake cable. Remove transmission-to-clutch housing bolts and pull transmission straight back until clutch shaft clears clutch disc and release levers before lowering transmission out of truck. Do not disengage clutch or otherwise move clutch or clutch disc unless it is to be removed for service.

New Process 420

Shift gear shift lever into mesh with a drive gear. Disconnect universal joint and loosen yoke retaining nut. Disconnect brake and speedometer cables at transmission. Rotate gearshift lever retainer in a counterclockwise direction and pull up on lever at the same time. Do not lose spring or washer from lever. Remove transmission-to-clutch housing bolts and remove transmission from truck.

New Process 540, 541

Remove gearshift lever, floor mat and floor cover over transmission. Drop center bearing (if equipped). Place jack under transmission and unfasten transmission from clutch housing. Pull transmission with jack straight back about 6 inches. Then lower jack slightly. Move transmission with jack to the left so that clutch shaft will clear clutch housing. Lower transmission out of truck.

Clark 5 Speed Units

Remove floor mat and transmission access plate. Disconnect speedometer cable. On models with hand brake assembly, disconnect hand brake lever to hand brake rod or cable. Disconnect clutch control linkage at transmission bell housing. Disconnect propeller shaft and center bearing (if equipped).

If equipped with auxiliary transmission, disconnect transmission-to-auxiliary transmission companion flange. Place transmission jack under transmission and remove clutch housing-to-transmission cap screws. Move transmission back until clutch shaft is clear of clutch housing. Lower transmission from truck.

Spicer Auxiliary Units

Drain transmission lubricant. Shift each shaft to a forward position. Remove clevis pins and then place shafts to neutral position. Disconnect universal joint companion flange next to front of auxiliary transmission. Disconnect emergency brake rod and speedometer cable. *If it is difficult to disconnect speedometer cable, remove brake band.*

Mark sliding yoke and drive shaft with a center punch for proper installation. Position portable hydraulic jack under transmission and remove transmission support bolts. *Observe position of mounting components to assist in proper installation.* Lower transmission and pull sliding yoke from propeller shaft spline. Then remove transmission from truck.

DODGE 3 SPEED, 1952-58

Disassemble, Figs. 1, 2

1. Drain oil from transmission.
2. Remove cover assembly.
3. Remove nut at end of mainshaft and pull off flange and brake drum.
4. Remove speedometer drive pinion and oil seal.
5. Disconnect hand brake rod at band and remove horseshoe clip which anchors hand brake linkage to transmission.
6. Remove cap screws which hold brake support to transmission case and lift off support, oil seal and brake assembly.
7. Remove speedometer drive gear.
8. Remove main drive gear bearing retainer.
9. Pull mainshaft and gear assembly out of the rear of the case far enough to remove mainshaft rear bearing.
10. Lift mainshaft and gears out of case.
11. Slide low and reverse gear off mainshaft.
12. Remove clutch gear snap ring and slide off synchronizer and second speed gear assembly.
13. Remove countershaft lock plate.

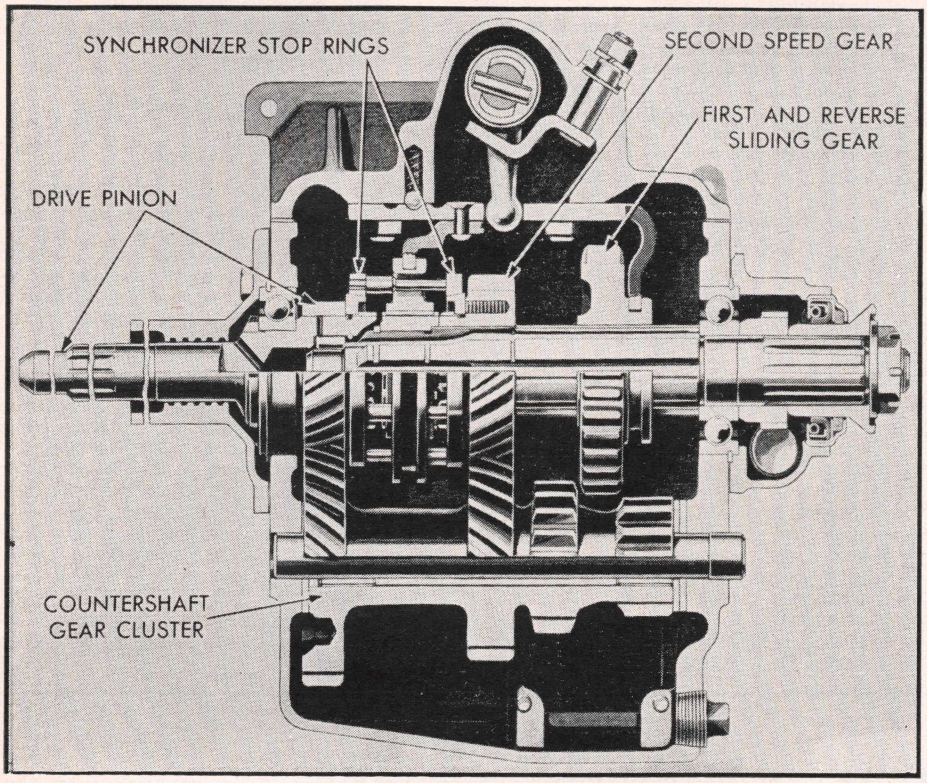

Fig. 1 Dodge Three-speed synchromesh transmission with remote control, 1952-58

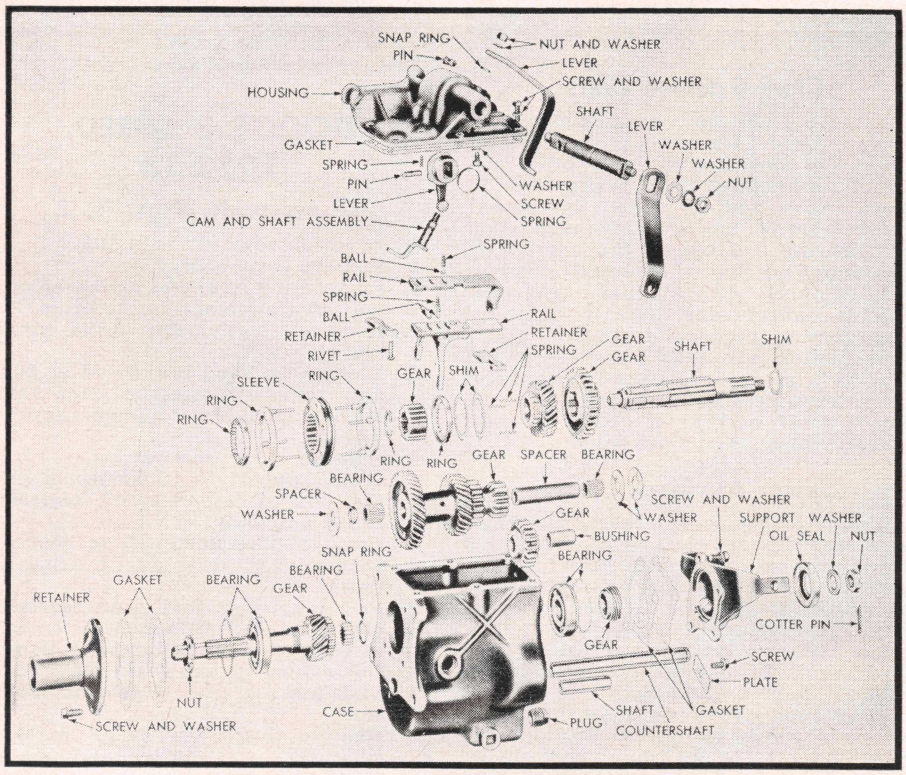

Fig. 2 Dodge Three-speed synchromesh transmission with remote control, 1952-58

14. Drive countershaft out of the rear end of the case, using a special arbor and soft hammer, allowing the gear cluster to drop to the bottom of the case.
15. Pull main drive gear out through front of case.
16. Remove main drive gear lock, lock and bearing.
17. Lift out countershaft gear cluster and thrust washers. By removing the arbor the bearings and spacer will be available for inspection.
18. Drive reverse idler gear shaft to the rear of case and lift out gear.

Assemble

The bearings on the rear end of the main drive gear and mainshaft are held in place by snap rings. Whenever these snap rings are removed, they should be replaced with new ones.

All assembly operations are performed in the reverse order of that given for disassembly. However, the following must be observed:

1. Countershaft end play should be held to .004" to .015". Install new thrust washers to achieve this result.
2. When inserting the bearing rollers in the ends of the countershaft gear, pack the ends of the gear with medium cup grease to hold the rollers in place.
3. The countershaft gear thrust washers should be placed in correct position after they have been coated with cup grease. At the front end of the transmission the small spacer is to be placed between the bronze washer and countershaft bearings.
4. When installing the main drive gear the lock nut must be securely tightened and staked at the notches provided on the shaft.
5. The synchronizer should be assembled so the slots of the stop ring engage the plates in the clutch gear sleeve.

1959-63 DODGE THREE SPEED

1. Referring to Fig. 3, remove transmission flange.
2. Remove extension housing.
3. Remove transmission cover.
4. Remove clutch shaft bearing retainer.
5. Grasp clutch shaft with hand and pull assembly out of case. *Be careful not to bind inner synchronizer ring on clutch teeth.*
6. With transmission in reverse, remove outer center bearing snap ring, using a hook or a flat blade, then partially remove mainshaft.
7. Cock mainshaft; then remove synchronizer sleeve, rings and 2-3 shift fork.
8. Remove clutch gear snap ring, using snap ring pliers. Slide clutch gear off end of mainshaft.
9. Slide second speed gear, stop ring and synchronizer spring off mainshaft.
10. Remove low-reverse sliding gear and shift fork as mainshaft is withdrawn from case.

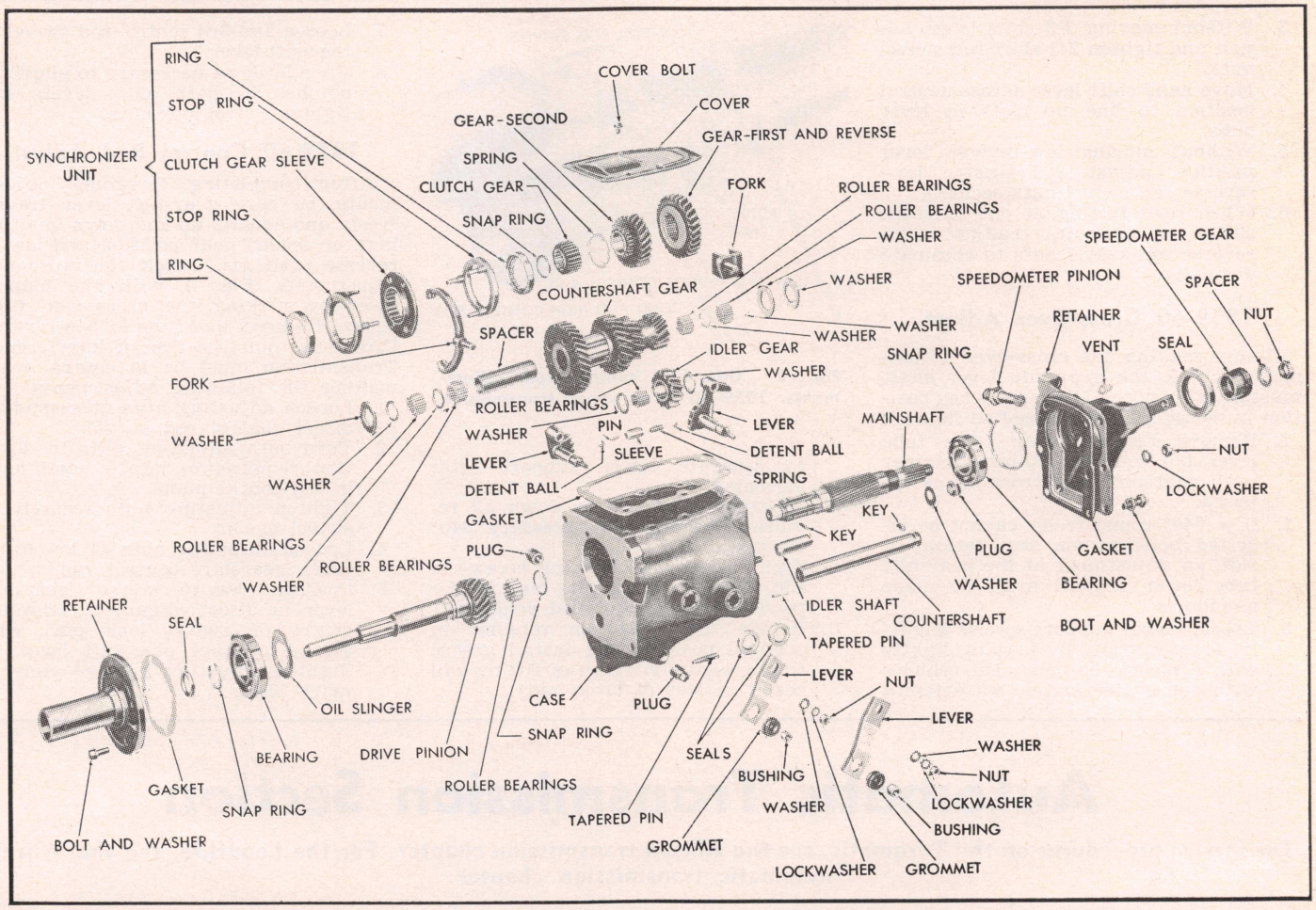

Fig. 3 Dodge three speed transmission. 1961-63. Typical of 1959-60

11. Using a feeler gauge, check end play of cluster gear, which should be .004″ to .012″. This measurement will determine if new thrust washers are to be installed at reassembly.
12. Drive countershaft rearward and out of case. Remove key from end of shaft.
13. Lift cluster gear and thrust washers out of case. Dissassemble cluster gear by removing needle bearings (22 each end) and spacer.
14. Using a suitable drift, drive reverse idler gear shaft towards rear and out of case. Remove key from shaft.
15. Lift out reverse idler gear, thrust washers and needle bearings (22) out of case. Remove needle bearings from gear.

Assembly Notes

Reassembling the transmission is accomplished by reversing the disassembly procedure. However, observe the following:

1. When installing the reverse idler gear, have the bevelled ends of the gear teeth forward. Raise the idler gear slightly to align with shaft: then drive shaft into case, through thrust washer and gear, until end of shaft is approximately $\frac{1}{64}$″ below surface of case.
2. Cluster gear thrust washers are available in two sizes marked "A" and "B". Make a selection to give .004″ to .012″ total end play of cluster gear. Make sure tabs on thrust washers slide into grooves in case. Countershaft should be installed until approximately $\frac{1}{64}$″ below surface of case.
3. When installing mainshaft, have offset of low-reverse fork to rear. Engage fork in low-reverse gear, then position in case by shifting in reverse.
4. After sliding the synchronizer clutch gear on mainshaft and down against second speed gear, select a snap ring of the correct thickness and install. *Snap ring should eliminate end play and must be a snug fit.*
5. Check clearance between clutch gear and second speed gear, which should be .003″ to .008″. *End play in excess of .008″ will permit gear "jump out."*
6. After mainshaft is properly positioned, select a snap ring that will be a snug fit at the rear bearing.

GEARSHIFT, ADJUST

1961-63 Cross-Over Adjust

1. Place transmission in neutral.
2. Loosen 2-3 control rod swivel at shift lever, Fig. 4.
3. Move lever as necessary to align notches in both shift levers. Tighten control rod swivel nut.

1961-63 Control Rod Adjust

1. With transmission in neutral, loosen and back off both adjusting nuts at the control rod swivels, Fig. 4.
2. Move cross-over pin into engagement with 2-3 lever slot.

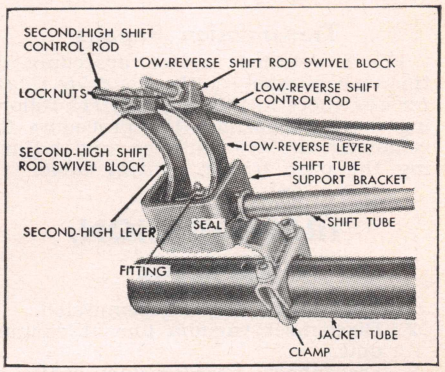

Fig. 4 Gearshift lever adjustments. 1961-63 three speed transmission

3. Without moving 2-3 shift lever, adjust and tighten 2-3 shift rod swivel nuts.
4. Move hand shift lever across neutral position to line up slots in lever hubs.
5. Without moving low-reverse lever position, adjust and tighten low-reverse rod swivel nuts securely.
6. When road testing, if one of these shifts is difficult, readjust low-reverse rod swivel nuts to eliminate difficulty.

1959-60 Cross-Over Adjust

Before making the cross-over adjustment, Fig. 5, the gearshift lever shaft must be in its normal fully returned position in neutral. Then proceed as follows:

1. Remove grease fitting from tube lever pin retainer. Rotate retainer until gearshift tube cross pin is exposed.
2. If a .040″ round feeler cannot be inserted between pin and bottom of slot, an adjustment at the gearshift tube lower support must be made as follows:
3. Loosen lower support screws slightly. Move support by tapping lightly with a plastic hammer. On vehicles with power steering, do not attempt to separate lower support after loosening.
4. Adjust support up or down as required to secure the necessary .040″ clearance.
5. Tighten support clamping screws to 150 *inch* lb. torque (90 *inch* lb. for power steering equipped vehicles).
6. Rotate tube-lever pin retainer to original position and install grease fitting securely. (Loss of fitting will result in loss of cross pin).

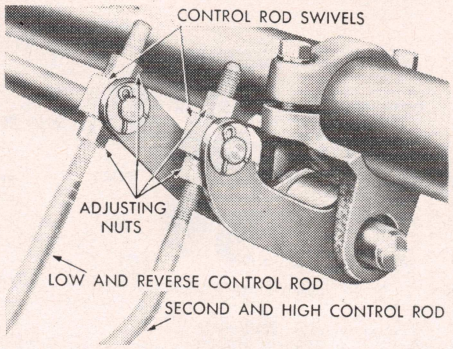

Fig. 5 Gearshift control rod adjustments. 1959-60 three speed transmission

7. Loosen 2nd-3rd control rod swivel at the shift lever.
8. Move lever as necessary to align the notches in both shift levers and tighten swivel lock nuts.

1959-60 Control Rod Adjust

After completing foregoing adjustments, be sure gearshift lever travels freely and equally up and down in either high or second gear position and low or reverse positions. Check the cross-over adjustments, Fig. 6, with the manual lever by making the cross-over from second-to-direct and from low-to-reverse. Cross-over must be free of interference. Transmission must be in neutral when making the following adjustments:

1. Loosen adjusting nuts at second-to-direct control rod swivel.
2. Turn both adjusting nuts in direction required to locate hand lever in horizontal plane.
3. Tighten adjusting nuts securely to swivel block.
4. Loosen adjusting nuts at low-to-reverse gearshift control rod swivel.
5. Position low-to-reverse gearshift lever in direct alignment (through center of swivel lock pin) with second-to-direct gearshift lever. Tighten adjusting nuts securely to swivel block.

Automatic Transmission Section

For service procedures on the Torqmatic, see the Allison transmission chapter. For the Loadflite, see the Warner automatic transmission chapter

LOADFLITE TRANSMISSION

Service Note for 1961-63 Inclined 6-Cyl. Engine

An adapter plate is used for installation of the Loadflite transmission on the inclined 6-cylinder engine. The adapter components consist of a mounting plate welded to the front face of the converter, an adapter plate bolted to the crankshaft flange, an adapter plate attached to the rear of the cylinder block, and a converter housing designed for attaching the transmission to the engine block adapter plate.

Transmission Repairs

For a detailed service procedure on this transmission see the *Loadflite Chapter* elsewhere in this manual. The following material outlines the procedure for removing the transmission and adjusting the push button control cable.

TRANSMISSION, REPLACE

1. Drain fluid from transmission.
2. Disconnect vacuum line at vacuum unit.
3. Disconnect speedometer cable at transmission.
4. Disconnect hand brake cable at bracket and remove clevis pin.

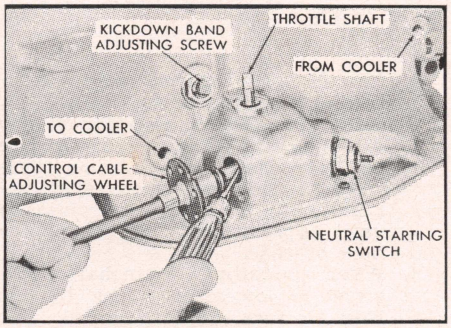

Fig. 1 Removing gearshift control cable. 1960-63

5. Disconnect gearshift control cable at transmission.
6. Disconnect two oil cooler lines and bracket.
7. Disconnect propeller shaft at transmission flange. *Wire end of propeller shaft to frame to permit transmission removal.*
8. Support transmission with suitable transmission lift.
9. Remove upper transmission case-to-converter housing cap screws. Install two pilot studs. Then remove lower cap screws.
10. Pull transmission rearward to disengage it from torque converter and remove the assembly from the truck.
11. Reverse the foregoing procedure to install the transmission.

PUSH BUTTON CONTROL CABLE, ADJUST

The importance of correct push button cable adjustment cannot be over-emphasized. Improper adjustment or a kinked cable can cause erratic shifting or possible front clutch failure. To make the adjustment, proceed as follows:

1960-63

1. Have a helper hold the "R" button firmly depressed.
2. Remove adjusting wheel lock screw, Fig. 1.
3. Back wheel off cable guide (counter-clockwise) until two or three threads are showing on guide behind wheel. *Important: Check wheel for free turning on the guide; remove any dirt or burrs in threads of cable guide that may interfere. Lubricate guide threads with a few drops of transmission fluid.*
4. Hold cable guide centered in hole in transmission case and apply only enough inward force to bottom assembly at the reverse detent. While holding cable bottomed, rotate adjusting wheel clockwise until it just contacts case squarely.
5. Turn wheel clockwise just enough to make the next adjustment hole in the wheel line up with the screw

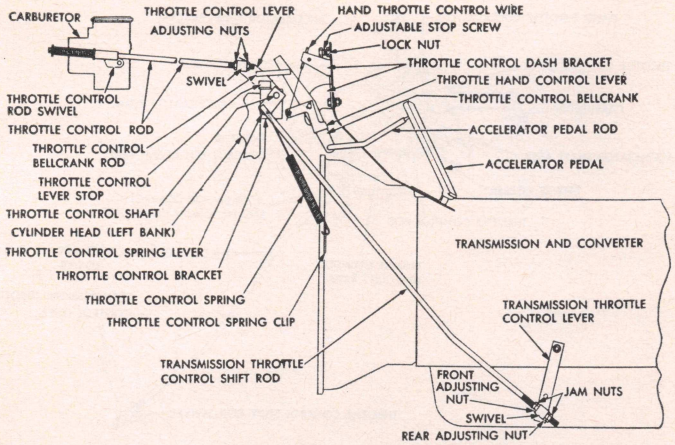

Fig. 3 Torqmatic throttle linkage adjustment. 1959 models 500, 600

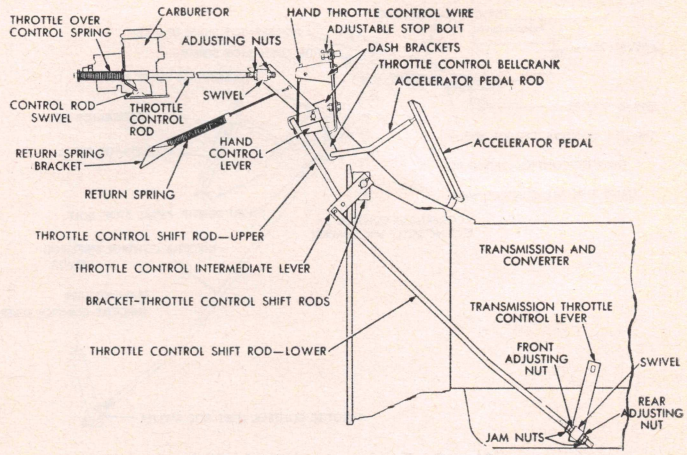

Fig. 4 Torqmatic throttle linkage adjustment. 1959 model 700

hole in case.

6. Counting this hole as No. 1, continue turning the wheel clockwise until the fifth hole lines up with the screw hole in the case.
7. Install lock screw and tighten to a torque of 30-50 inch lbs.

1959

1. Raise vehicle on hoist and drain 2 quarts of fluid from transmission.
2. Engage "L" push button.
3. Remove control cable lock clip.
4. Remove plug and locking screw.
5. With screwdriver inserted through plug hole, push gently against upward projecting portion of control cable adapter spring and pull outward on cable to remove cable from adapter housing.
6. Insert screwdriver into cable entrance hole in cable adapter housing and push cable adapter to limit of travel to the reverse detent position. Remove screwdriver.
7. Reinstall plug and locking screw in adapter housing.
8. Turn locking screw with screwdriver counter-clockwise until locking screw contacts adapter. Tighten locking screw firmly against adapter to cause adapter to bind against adapter housing. *Do not over-tighten screw as adapter housing may be damaged.*
9. Engage "R" button.
10. Hold cable in alignment with hole in adapter housing.
11. Push cable into housing until adapter spring engages groove in cable end.

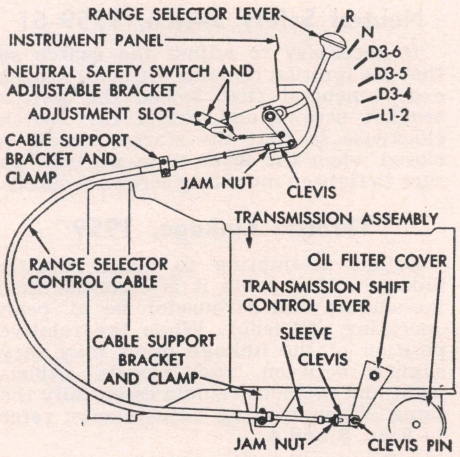

Fig. 2 Torqmatic transmission range selector lever control cable. 1959-61

12. With a helper firmly holding the "R" button in at full travel position, carefully position cable housing at the midpoint of cable backlash.
13. While continuing to hold "R" button firmly, tighten cable adjusting clip screw securely, being careful not to move cable during tightening process.
14. With screwdriver, turn adapter locking screw clockwise to limit of travel. Tighten 10 to 16 inch lbs. In this position, locking screw seats against inner end of plug and prevents oil leakage at this point.

1956-58

1. "R" push button must be depressed and held all the way in during adjustment.
2. Loosen cable lock clip screw at transmission.
3. Push cable in until it stops; then release cable.
4. Tighten cable clip screw, making sure cable housing is not forced in or out during adjustment.
5. To check for proper operation, push the various buttons, return to "N" each time while checking starter operation. Engine should start only when "N" button is depressed.

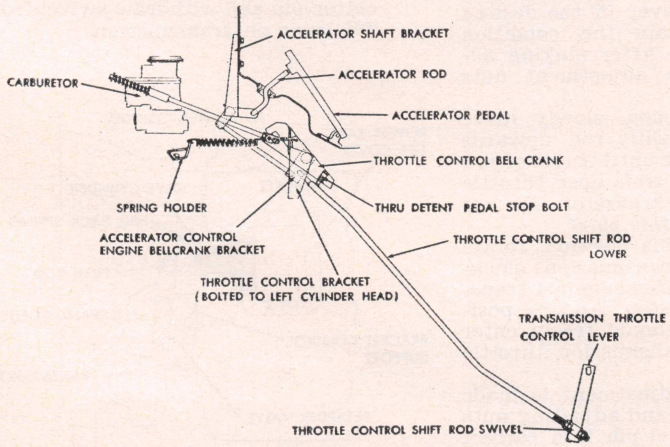

Fig. 5 Torqmatic throttle linkage 1960-61 models C500, C600

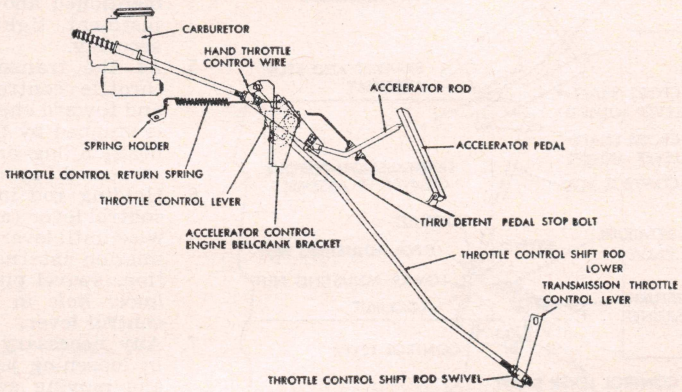

Fig. 6 Torqmatic throttle linkage. 1960-61 models D500, D600

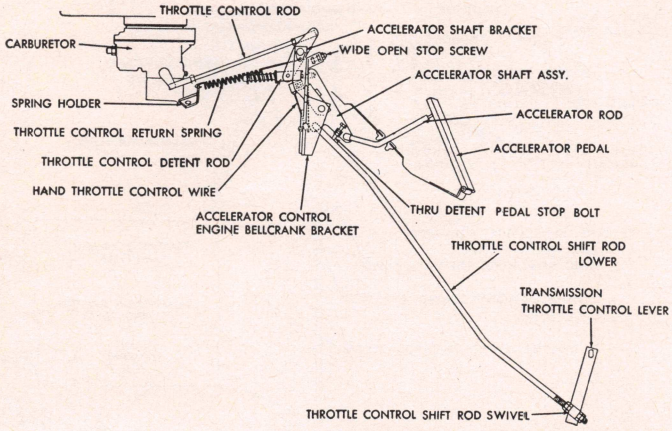

Fig. 7 Torqmatic throttle linkage. 1960-61 model D700

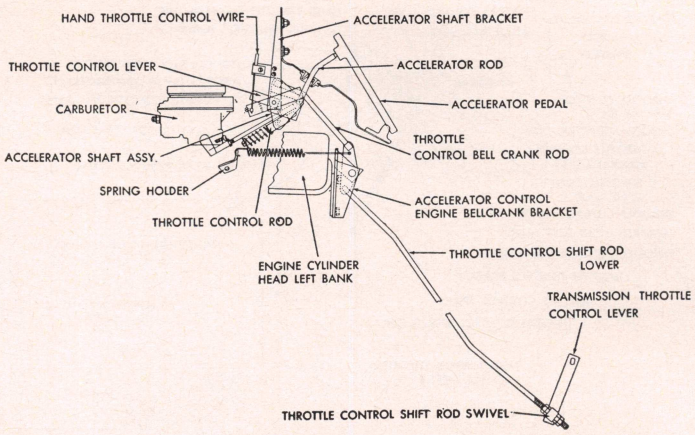

Fig. 8 Torqmatic throttle linkage. 1960-61 models C700, CT700

TORQMATIC TRANS.

A detailed service procedure on this transmission is carried in a separate chapter. Following are adjustment procedures for Dodge truck installations.

Range Selector Lever Linkage 1959-61

1. Referring to Fig. 2, place range selector lever in the "R" position.
2. Remove pin from clevis at transmission shift control lever.
3. Move clevis out of the way, then shift control lever all the way forward towards front of truck.
4. Push control cable into its sleeve until selector lever hits the "R" stop. In this position, hole in cable clevis should be aligned with hole in transmission shift control lever.
5. If alignment is not correct, loosen jam nut at clevis and turn clevis in or out until alignment is obtained and clevis pin can be installed easily.
6. Secure clevis pin with cotter pin and tighten jam nut.
7. Test operation of selector lever in all positions.

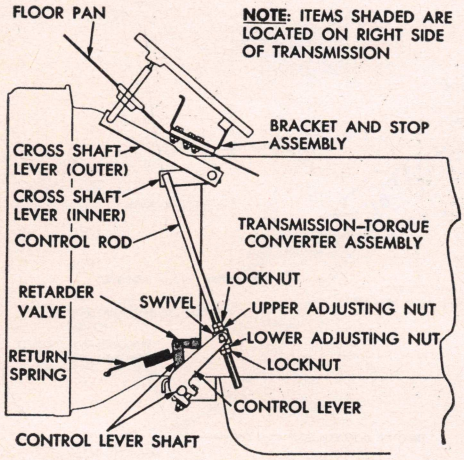

Fig. 9 Retarder linkage. 1959

Neutral Safety Switch, 1959-61

If necessary to adjust the switch so that the ignition remains off in all ranges except neutral first loosen the switch bracket screws and rotate the switch clockwise so that the starter circuit is closed when the lever is in neutral. Be sure to tighten mounting screws securely.

Throttle Linkage, 1959

Before attempting to make throttle linkage adjustments it is essential that the engine and carburetor be at peak operating efficiency. While the relative position of the linkage parts may vary slightly between truck models, adjustment and methods remain essentially the same. When making adjustments, refer to Figs. 3 and 4.

1. Remove throttle control spring from spring lever and spring clip.
2. At transmission, withdraw swivel from throttle control lever.
3. Remove carburetor air cleaner and note position of throttle valve.
4. With throttle valve closed, the throttle control lever stop should be in full contact against the throttle control bracket which is bolted to the engine left-hand cylinder head. Any necessary adjustment is made by loosening the swivel adjusting nuts on the throttle control rod and moving the rod or lever in the desired direction to obtain the condition mentioned above. After making adjustment, tighten adjustment nuts securely.
5. At the transmission, slowly move throttle control shift rod upwards and toward engine until travel of rod is stopped by the wide open throttle position lug on carburetor. *Do not move rod beyond this point.*
6. Holding rod in this position, rotate control lever (at transmission) clockwise until lever is firm against transmission internal stop. At this position, swivel pin should freely enter *lower hole* in transmission throttle control lever.
7. Any necessary adjustment is made by loosening jam and adjusting nuts and moving swivel pin into correct alignment. Finger tighten front and rear adjusting nuts against swivel.
8. Install swivel cotter pin and back off the swivel rear adjusting nut 6 turns. Then tighten front nut and jam nuts.
9. On engine side of dash panel, loosen lock nut of adjustable stop screw and turn in the adjustable stop several turns.
10. At the transmission, again move the control shift rod upwards and toward the engine until throttle control lever is firm against the transmission internal stop.
11. Holding shift rod firmly in this position, turn adjustable stop screw outward until it contacts throttle control bellcrank, then turn screw outward an additional ¼ turn. Lock stop screw in this position.
12. Reconnect throttle control spring and road test truck. If shift points are low shorten throttle control shift rod; if shift points are too high, lengthen rod.

Throttle Linkage, 1960-61

1. Referring to Figs. 5, 6, 7 and 8 for model being serviced, first remove throttle control return spring and governor floating arm spring. *Do not stretch or distort governor spring in any way as it will throw off the governor calibration.*
2. At transmission, remove transmission throttle control shift rod swivel cotter pin and withdraw swivel from TV lever on transmission.

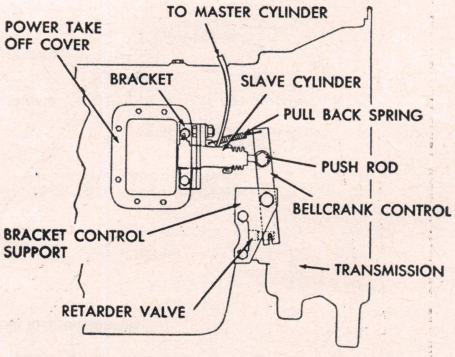

Fig. 10 Retarder linkage. 1960-61

3. Remove carburetor air cleaner.
4. Place carburetor throttle lever in idle position.
5. Adjust throttle control rod so that accelerator control bellcrank stop is against bracket. Tighten nuts on throttle control rod.
6. Move carburetor throttle lever to wide open position.
7. On D700, Fig. 7, the wide open throttle stop bolt must be adjusted so that the bolt head contacts the bellcrank when the throttle is in wide open position.
8. With throttle control shaft pushed upwards until travel of rod is stopped by the wide open throttle stop, rotate the transmission throttle control lever (at transmission) forward until the TV lever is firm against the internal stop in the transmission. At this position the swivel pin should freely enter the lower hole in the transmission throttle valve (TV) control lever. Finger tighten front and rear adjusting nuts against swivel.
9. Back off swivel rear adjusting nut six turns and tighten nuts.
10. On all models except C700 and CT700, the through detent pedal stop (located on throttle control bellcrank) must be adjusted so that pedal forces cannot be applied to TV linkage. To do this, adjust stop so that it contacts the bracket bolted to the back of the engine at the same time the TV lever contacts the stop in the transmission. Then turn bolt ¼ turn further to eliminate any force being applied through the linkage from the stop in the transmission.
11. Reconnect throttle control spring and governor floating arm spring and road test vehicle.
12. After adjustment is complete, failure of the engine to return to the proper idle speed is an indication of too much length in the TV control rod. If engine idle is properly set at carburetor, this should be corrected by readjusting the TV linkage properly.

Retarder Linkage, 1959

1. Referring to Fig. 9, unhook transmission retarder control lever shaft return spring.
2. Loosen and back off lock nuts and upper and lower adjusting nuts at control rod swivel.
3. Place retarder valve in full applied position by pushing valve into body to limit of travel. Pull control rod downward until travel of rod is stopped by accelerator pedal making contact with its bracket and stop.
4. Run upper adjusting nut down to control rod swivel. Give nut two additional turns to lengthen control rod slightly. Tighten lower adjusting nut and both lock nuts. Replace spring.
5. Check adjustment by depressing the pedal. The retarder valve should be felt to bottom in the valve body just before the pedal bottoms. Check for full release of retarder valve and adjust if necessary.

Retarder Linkage, 1960-61

Referring to Fig. 10, adjust master cylinder push rod so that there is .010″ free play (measured at pedal pad approximately $\frac{1}{16}$″) between push rod and master cylinder piston, where piston is in its fully returned position. The system must be free of air and master cylinder filled to ½″ of top. Push rod on slave cylinder should travel ½″ for full retarder action.

Rear Axle Section

For Eaton and Timken (Rockwell) driving axles used on Dodge trucks, see the "name" chapters for service procedures and lubricant capacities

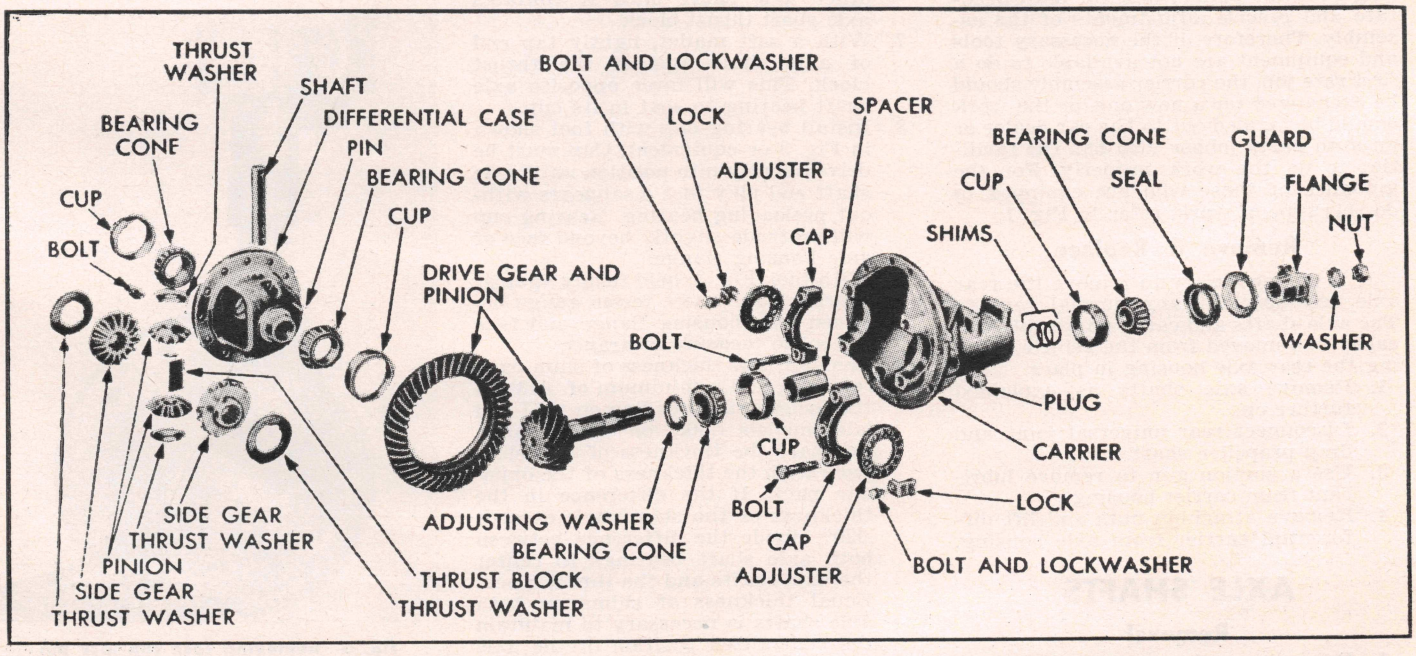

Fig. 1 Dodge differential carrier assembly used with semi-floating axle

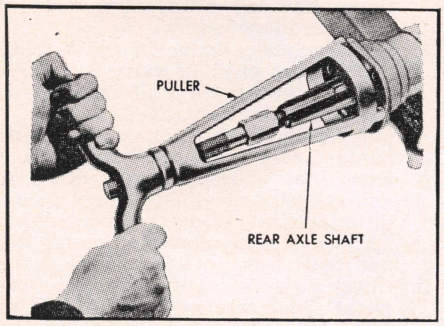

Fig. 2 Removing axle shaft

DODGE SEMI-FLOATING AXLE

In this rear axle, Fig. 1, the drive pinion is mounted in two tapered roller bearings, preloaded by a spacer and shims. The drive pinion is positioned by an adjusting washer between the head of the pinion and the rear pinion bearing. The front bearing is held in place by a large washer and nut.

The differential is supported in the carrier by two tapered roller side bearings. These bearings are preloaded by two threaded ring nuts between the bearings and the pedestals. The differential assembly is positioned for proper ring gear and pinion backlash by varying the adjustment of these ring nuts. The differential case houses two side gears in mesh with two pinions mounted on a pinion shaft which is held in place by a lock pin. The differential side gears and pinions are backed by thrust washers. A thrust block through which the differential pinion shaft is fitted, controls the end thrust of the axle shafts.

DIFF. CARRIER ASSY

Any major repairs on the differential carrier assembly, such as replacing the ring gear and pinion, calls for most accurate and precise adjustments of the assembly. Therefore, if the necessary tools and equipment are not available to do a first rate job, the carrier assembly should be exchanged for a new one, or the work should be farmed out to the car dealer or an auto parts jobber who has the facilities to do the work properly. For the guidance of those who are equipped to do this type of work, refer to Fig. 1.

Remove & Replace

It is not necessary to remove the rear axle assembly for any normal repairs. The axle shafts and carrier assembly can easily be removed from the vehicle, leaving the rear axle housing in place.

1. Remove axle shafts as explained further on.
2. Disconnect rear universal joint and drop propeller shaft.
3. Use a suction gun to remove lubricant from carrier housing.
4. Remove attaching nuts and lift differential carrier from axle housing.

AXLE SHAFTS

Removal

1. Raise car and remove rear wheels. Pull off hub and drum assembly.
2. Block brake pedal to prevent it being depressed and disconnect brake lines at wheel cylinders.
3. Remove axle shaft key and remove brake support and dust shield.
4. Carefully remove shim pack from end of axle housing.
5. Pull out axle shaft, using a puller of the type shown in Fig. 2. *Do not use knock-off type puller as it may cause damage to bearings and thrust block in differential.*
6. If necessary, pull bearing from axle shaft.
7. Use a hook-type puller to remove inner oil seal from axle housing.
8. When pressing on a new bearing, make certain that bearing and axle shaft contacting surfaces are thoroughly clean so that bearing bottoms against axle shaft shoulder. Tapered portion of bearing must face axle shaft threads.

Installation

Where original axle shafts and bearings are used, start measurement of end play with original shim packs, after recording thickness of each. When either or both the axle shaft and bearing is replaced, use shim packs totaling .040″ on each side. Shims are available in thicknesses of .005, .0125, .015 and .030″.

1. Install inner seal with a suitable driver.
2. Starting at one end of the axle housing, install a .040″ shim pack on flange studs.
3. Working from same side of axle housing, lubricate shaft bearing with multi-purpose gear lube and install axle shaft.
4. Install bearing cup, using tool shown in Fig. 3 or equivalent.
5. Install brake support, lockwashers and nuts. Tighten nuts to 30-35 ft. lbs.
6. Working from opposite side of axle housing, lubricate bearing and install other axle shaft until it contacts axle shaft thrust block.
7. With a soft mallet, lightly tap end of axle shaft against the thrust block. This will force opposite axle shaft bearing to seat in its cup.
8. Install bearing cup with tool shown in Fig. 3 or equivalent. Cup must be driven gently into position until axle shaft end play just disappears without preloading bearing. Bearing cup will protrude slightly beyond face of axle housing flange.
9. With tool, Fig. 3, held firmly against bearing cup, insert feeler gauge between axle housing flange and face of tool to measure clearance.
10. To determine thickness of shim pack required, add a minimum of .013″ to the feeler gauge reading on 1957 and later models (.005″ on earlier cars). Compare the thickness of this shim pack with the thickness of the opposite pack. If the difference in the thickness of the shim pack exceeds .020″, divide the difference between both axle shaft bearings to center the axle shafts and the thrust block. Equal thickness of shims on both axle shafts is necessary to maintain the centralized position of the axle shaft thrust block.

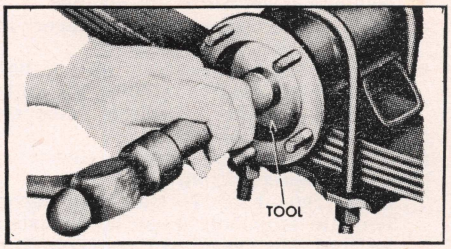

Fig. 3 Installing axle shaft bearing cup

11. Position shim packs on flange studs and drive bearing cups in until tool, Fig. 3, bottoms on shim packs.
12. Install new outer oil seals on brake support plates with lip of seal toward center of vehicle.
13. Insert a suitable sleeve tool in outer seal to protect seal when brake support is installed.
14. Install dust shield and brake support. Tighten attaching nuts to 30-35 ft. lbs.
15. Install wheels, hub and drum.

DODGE FULL-FLOATING AXLES

In these axles, Figs. 4 and 5, the servicing procedure is fundamentally the same as outlined for semi-floating axles with exception of removing axle shafts, servicing the barrel type differential case shown in Fig. 4, and the ring gear thrust block adjustment.

Axle Shaft, Replace

1. Remove axle shaft flange nuts.
2. Install puller screws in the threaded holes provided, then tighten the screws to loosen the shaft. If threaded holes are not provided, tap the flange with a soft-faced hammer to loosen the shaft.

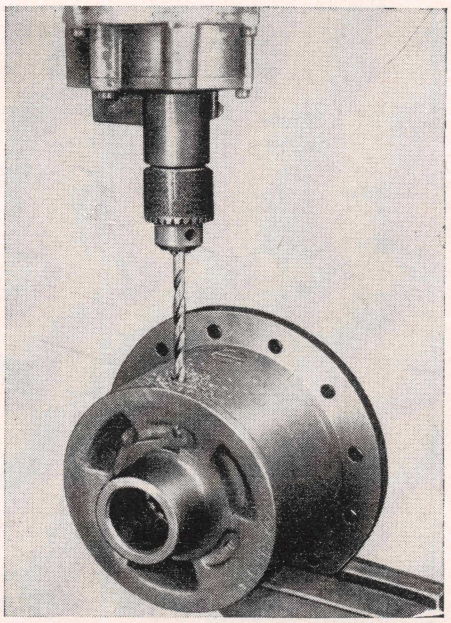

Fig. 6 Removing case cap lock pin from barrel type differential case

3. When installing the shaft, use a new gasket and tighten the flange nuts to 30-35 ft-lbs torque.

Barrel Type Diff. Case

1. After the differential assembly is removed from the carrier, remove the drive gear thrust block from the ring gear side of the carrier housing. Break the weld on the lock nut and remove the screw from the housing.
2. Remove differential case cap lock pins by center punching and drilling out the pins, Fig. 6.
3. Heat the case (not the cap) by playing a torch around the outside of the cap. Keep the flame moving to assure even heating. While heating, touch the case with a piece of ordinary solder from time to time. When the solder just starts to melt, the case is heated to the proper temperature.
4. Unscrew the cap, using the tool shown in Fig. 7. To loosen the cap, strike the handle of the tool with a hammer, then quickly unscrew the cap. Remove side gear and thrust washer.
5. Remove differential pinion shaft lock pins by driving them out of the case, Fig. 8.

Reassembly

1. Install a thrust washer on side gear hub, then place gear and washer in case.
2. Drive long pinion shaft into case as shown in Fig. 9.
3. Place thrust washer on one of the pinions, then position washer and pinion on end of long shaft that protrudes through case. Tap shaft through pinion until it is flush with bottom of pinion.
4. Insert pinion shaft thrust block into axle shaft thrust block with long pinion shaft holes aligned, and prick punched faces toward short pinion holes. Position this assembly in case, then drive pinion shaft through the blocks just flush with bottom of blocks.
5. Install next thrust washer and pinion. Drive shaft through washer and pinion into its final position. Make sure lock pin holes are lined up.

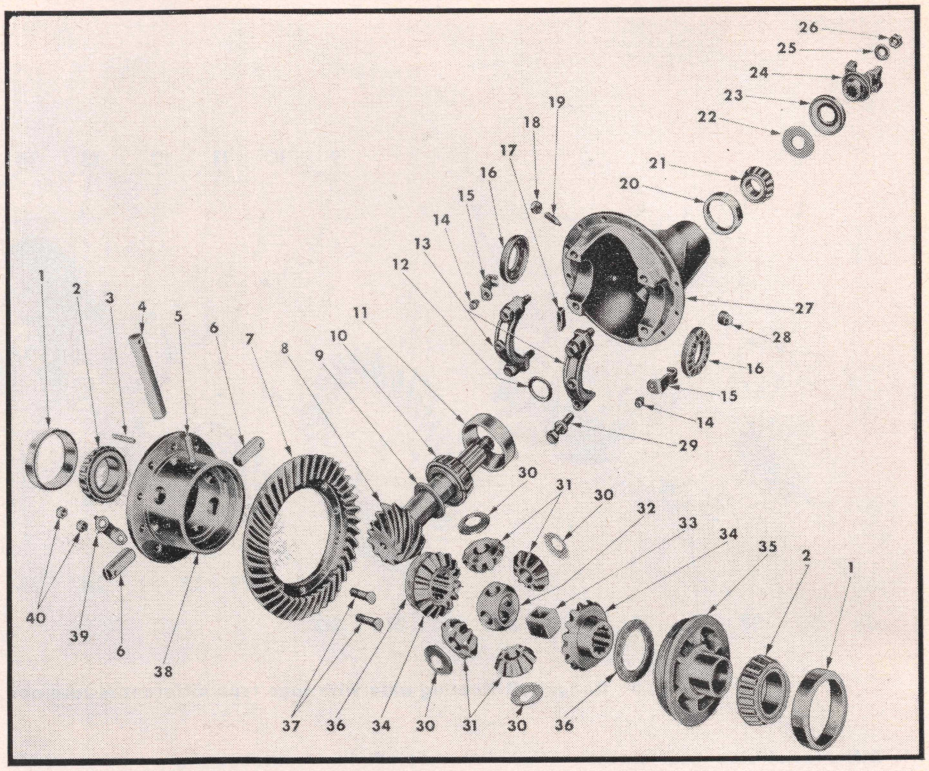

Fig. 4 Dodge single reduction differential carrier with barrel type differential case

1—Bearing cup	15—Lock	28—Filler plug
2—Bearing cone	16—Adjuster	29—Screw and washer
3—Shaft lock pins	17—Thrust screw pad	30—Thrust washer
4—Shaft	18—Check nut	31—Pinion
5—Lock pin	19—Thrust screw	32—Block
6—Shaft	20—Bearing cup	33—Thrust block
7—Gear	21—Bearing cone	34—Gear
8—Pinion	22—Oil slinger	35—Case cap
9—Washer	23—Oil seal	36—Thrust washer
10—Bearing cone	24—Yoke	37—Bolts
11—Bearing cup	25—Washer	38—Differential case
12—Washer	26—Nut	39—Nut lock
13—Carrier caps	27—Carrier	40—Nuts
14—Lock screw		

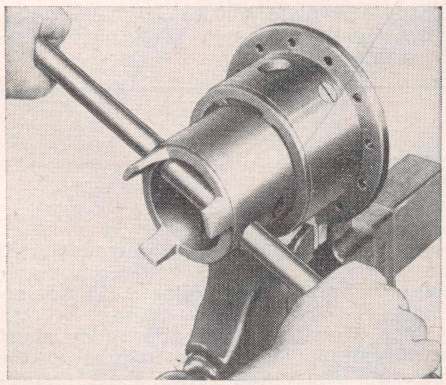

Fig. 7 Removing case cap from barrel type differential case

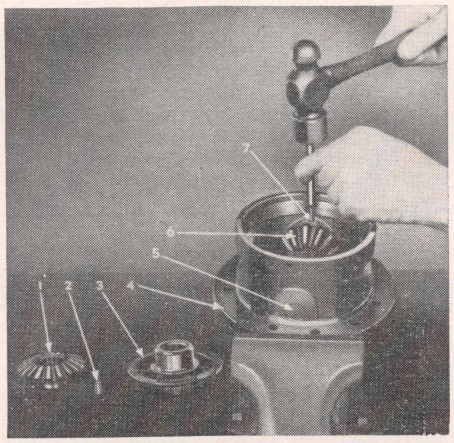

Fig. 8 Removing pinion shaft lock pin from barrel type differential case. 1. Side gear. 2. Cap lock pin. 3. Case cap. 4. Case. 5. Pinion shaft. 6. Pinion. 7. Shaft lock pin

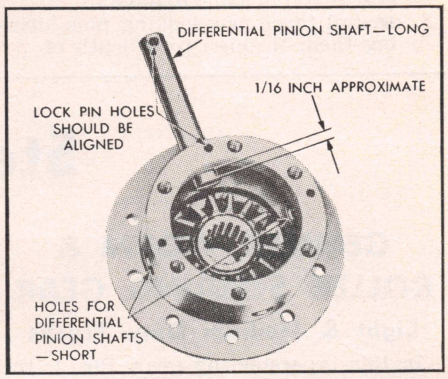

Fig. 9 Positioning long pinion shaft in barrel type differential case

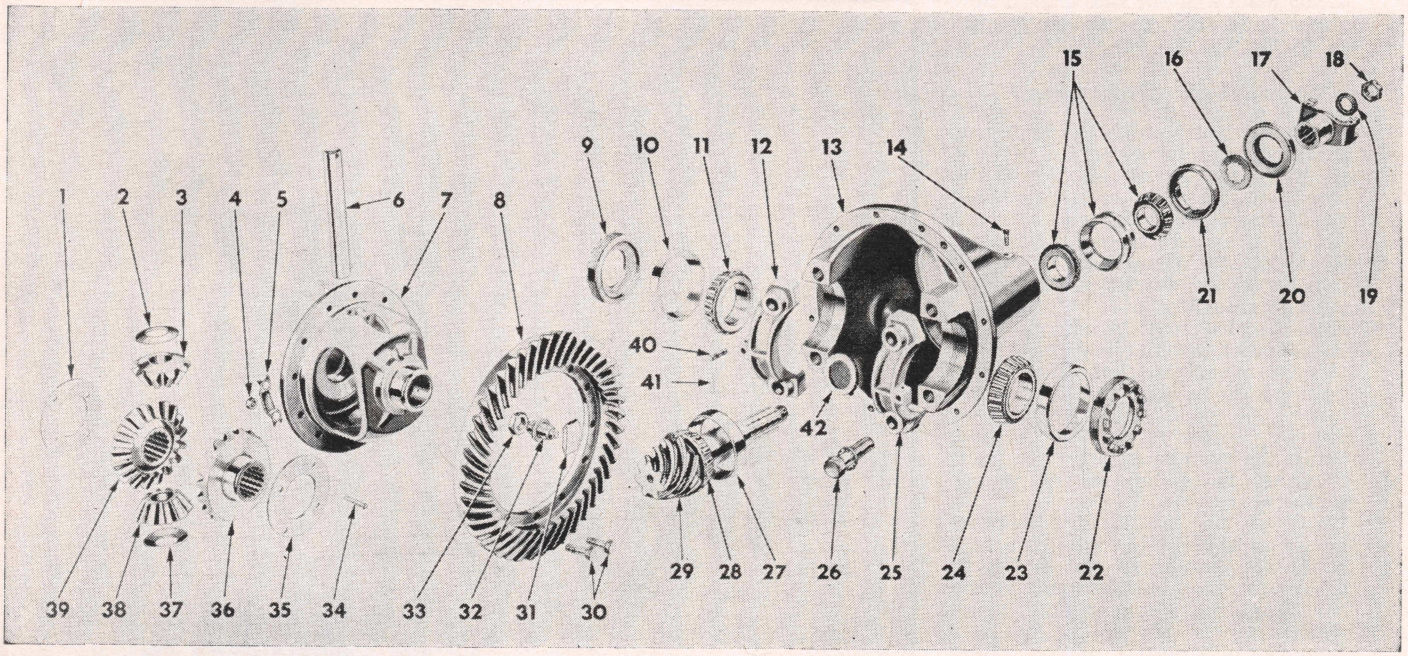

Fig. 5 Dodge full-floating axle with cage type differential case and three pinion bearings

1. Differential side gear thrust washer
2. Differential pinion thrust washer
3. Differential pinion
4. Ring gear bolt nut
5. Ring gear nut lock
6. Differential pinion shaft
7. Differential case
8. Ring gear
9. Differential bearing adjuster
10. Differential bearing cup
11. Differential bearing cone
12. Differential bearing cap
13. Differential carrier
14. Lock screw
15. Pinion front bearing
16. Pinion front bearing washer
17. Companion yoke
18. Yoke nut
19. Yoke washer
20. Pinion bearing oil seal
21. Front bearing retainer nut
22. Differential bearing adjuster
23. Differential bearing cup
24. Differential bearing cone
25. Differential bearing cap
26. Cap screw and washer
27. Pinion rear bearing cup
28. Pinion rear bearing cone
29. Drive pinion
30. Ring gear bolts
31. Ring gear thrust pad
32. Ring screw thrust screw
33. Thrust screw nut and washer
34. Differential pinion shaft lock pin
35. Side gear thrust washer
36. Differential side gear
37. Differential pinion thrust washer
38. Differential pinion
39. Differential side gear
40. Bearing adjuster lock pin
41. Cotter pin
42. Pinion bearing spacer

6. Drive one of short pinion shafts into either of the remaining holes until it protrudes about $\frac{1}{16}''$ inside of case with lock pin hole aligned with lock pin hole in case.
7. Position a thrust washer and pinion on end of shaft, then drive shaft through pinion and into hole in pinion shaft block. Install other short pinion shaft, thrust washer and pinion in same manner.
8. Install three new locking pins, driving them through to a depth of $\frac{1}{16}''$ below machined face of case. Peen case to hold lock pins in case.
9. Install a thrust washer on remaining side gear hub, then place gear and washer into case.
10. Heat the case to recommended temperature (see disassembly) and install the cap. Tighten the cap securely, Fig. 7. Drill new $\frac{1}{4}''$ holes through case and cap and install new locking pins.
11. Install drive gear thrust block before installing differential into carrier. Thread thrust screw through carrier, having one thread visible inside carrier. Hold block on screw with heavy grease.

Ring Gear Thrust Block

Run the thrust block screw in about four turns to force the block against the back face of the ring gear. Install lock nut on screw. Back out screw $\frac{1}{8}$ of a turn to provide .006 to .008″ clearance, then tighten lock nut. Weld nut to carrier in two spots.

Steering Gear Section

GEMMER WORM & ROLLER STEERING GEAR

Light & Medium Duty Trucks

In this type steering gear, Fig. 1, the worm is integral with the steering shaft and is supported on each end by opposed tapered roller bearings. The triple tooth roller is attached to the roller shaft by means of a steel shaft. Two needle bearing assemblies are installed between this shaft and the roller. (Some light duty models have a two tooth roller shaft).

The roller shaft is mounted in the steering gear housing on two needle bearing assemblies which are pressed into the housing. The housing cover is attached to the housing by four cap screws. An adjustment screw, mounted in the cover, controls roller shaft end play and worm and roller mesh adjustment.

The steering wheel and roller shaft arm (pitman arm) are splined to the steering shaft and roller shaft respectively. Both the pitman arm and steering wheel have master splines to insure correct installation.

Worm End Play, Adjust

1. Free the steering gear of all load by disconnecting the drag link and loosening the steering column braces.
2. Loosen the four cover screws about ⅛".
3. Use a knife to separate the top shim, passing the blade all the way around between the shims, being careful not to damage the remaining shims.
4. Remove one shim at a time between inspections to remove the end play.
5. The adjustment is correct when there is no end play and no stiffness in the steering gear throughout the complete range of its travel.

Roller Shaft End Play, Adjust

1. Turn the steering gear to either extreme and back off ⅛ of a turn.
2. Gripping the pitman arm at the hub, the roller shaft should rotate freely without a particle of end play.
3. If end play exists, adjust as required by means of the roller shaft adjusting screw in the side cover.
4. Be sure to tighten the lock nut securely and inspect for end play and free rotation throughout the entire range of steering gear travel.

Worm & Roller Mesh, Adjust

1. Loosen the roller shaft adjusting screw lock nut.
2. With the steering gear in its central position (drag link disconnected) tighten the roller shaft adjusting screw just enough to remove play between the roller shaft roller tooth and worm.
3. Check this by the amount of play felt at the pitman arm. It is better to leave a slight amount of play at this point than to tighten too much.
4. If tightened beyond the point where the lash is removed, serious results will occur which will cause poor steering operation.

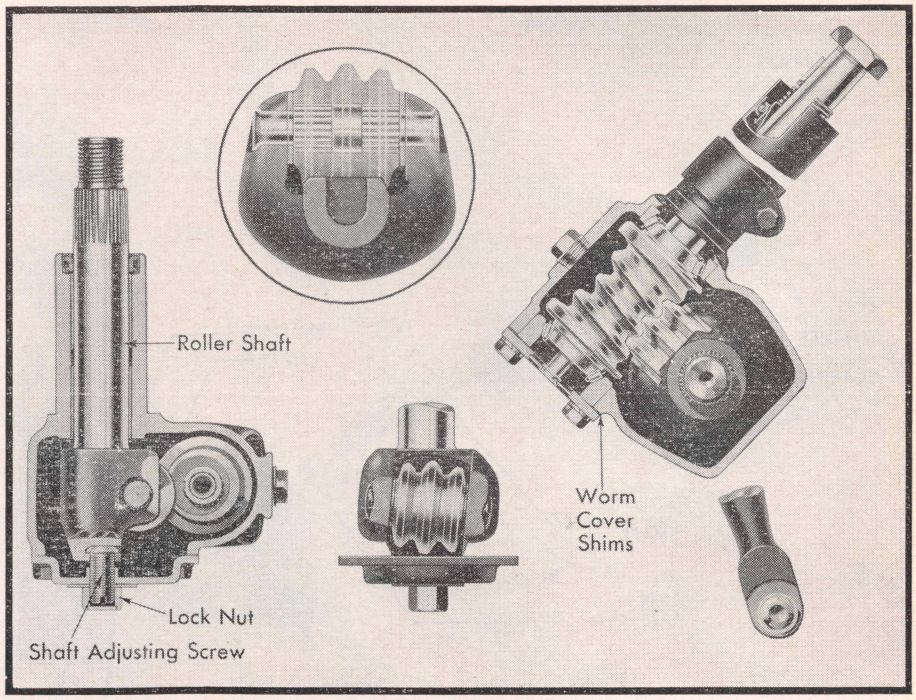

Fig. 1 Gemmer worm and roller steering gear. Light and medium duty trucks

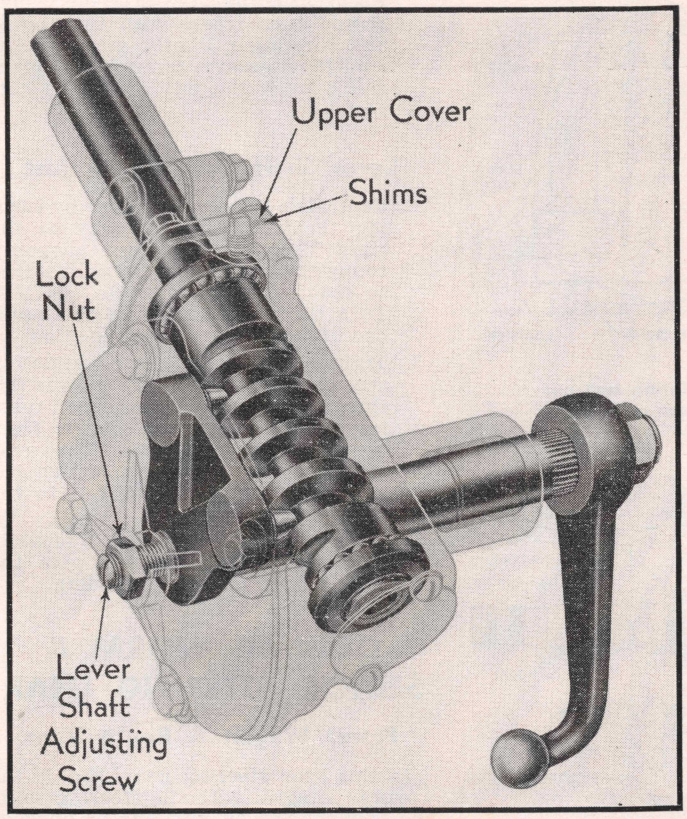

Fig. 2 Ross cam and twin lever steering gear. Heavy duty trucks

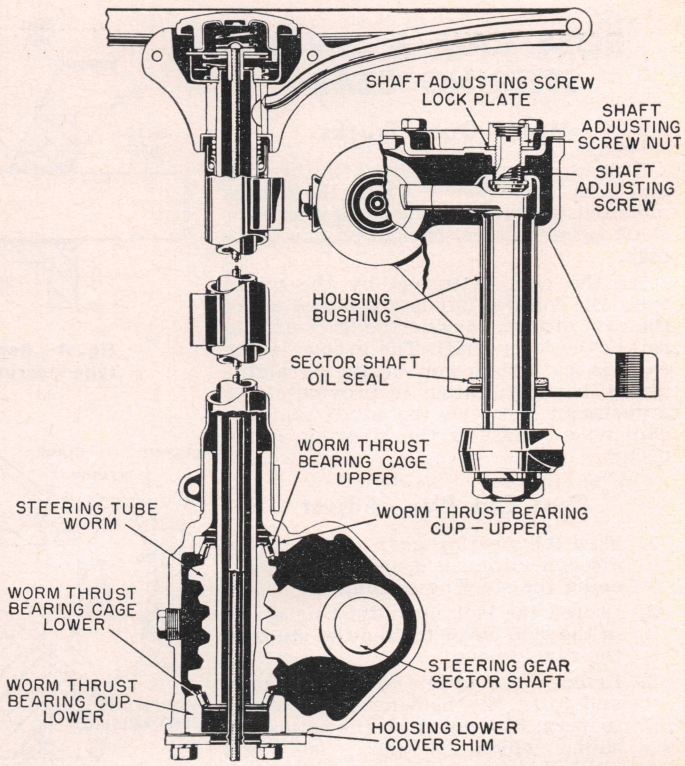

Fig. 3 Gemmer worm and sector steering gear. Power Wagon and Route Vans

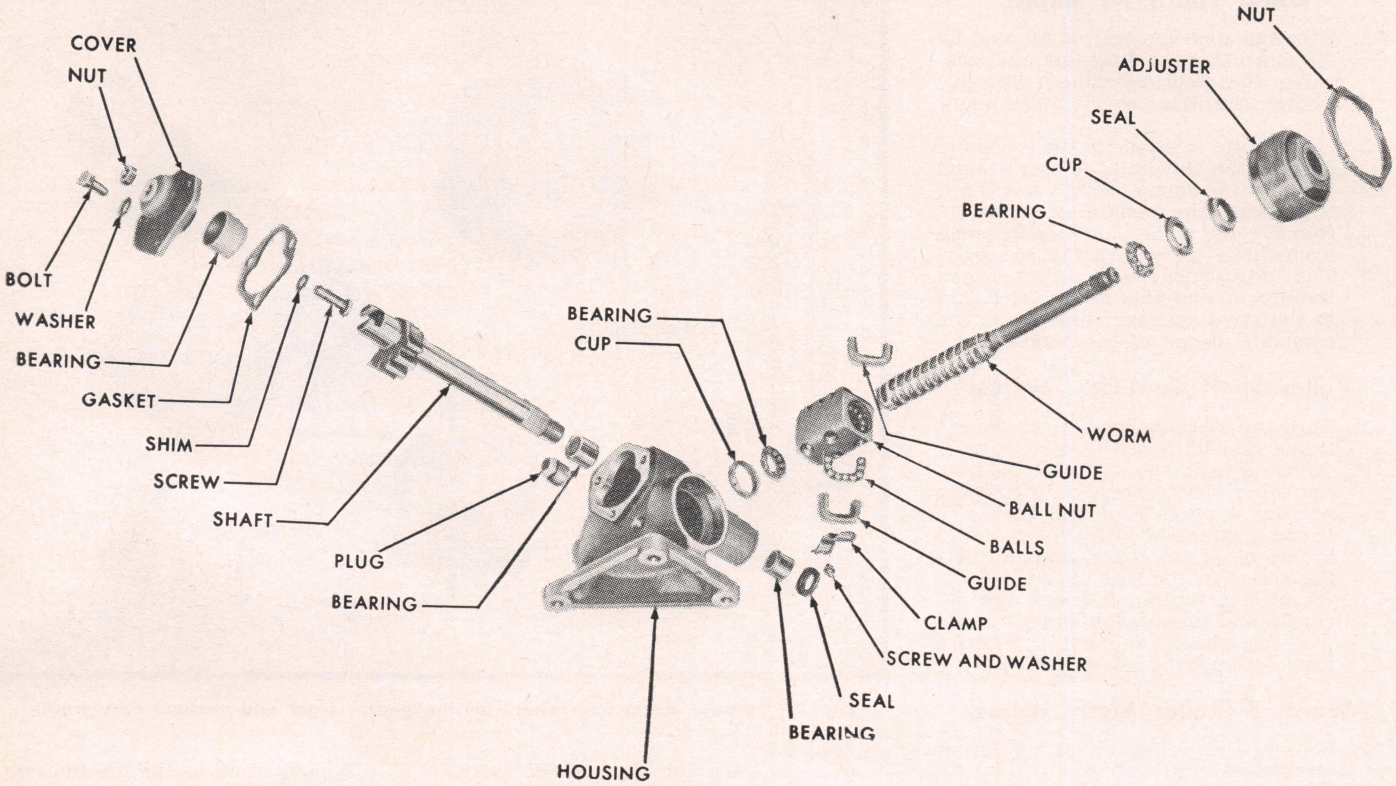

Fig. 6 Recirculating ball-nut type steering gear assembly

5. Tighten the adjusting screw lock nut.

ROSS CAM & LEVER STEERING GEAR

Heavy Duty Trucks

This steering gear, Fig. 2, is the cam and twin lever type in which the cam is mounted on ball bearings and the lever shaft turns on steel backed bronze bushings.

As the cam is turned by the wheel tube, the follower studs are pulled along the cam groove, causing the lever arm to rotate the lever shaft. The groove in the cam is cut shallower in the straight-ahead driving position to provide closer adjustment between the studs and the cam where most of the steering action occurs.

Cam End Play, Adjust

1. Free the steering gear of all load by disconnecting the drag link and loosening the steering column braces.
2. Loosen the lock nut adjusting screw in the side cover to free the studs in the cam groove.
3. Remove the upper cover stud nuts and raise the housing upper cover to permit removal of the adjusting shims, which are .002″, .003″ and .010″ thickness.
4. Clip and remove one thin shim, tighten down the cover and check the adjustment. There should be a slight drag but the steering wheel should turn freely with the thumb and forefinger lightly gripping the rim. If necessary, remove or replace shims until the adjustment is correct.

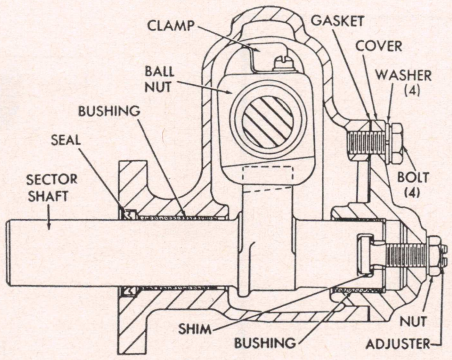

Fig. 4 Recirculating ball-nut type steering gear cross shaft

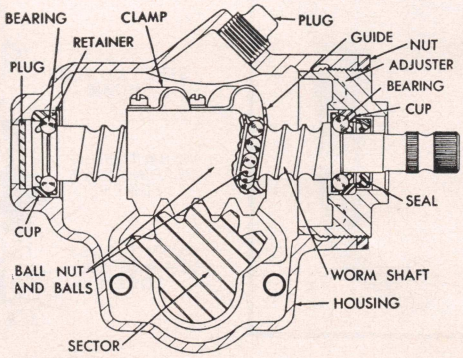

Fig. 5 Recirculating ball-nut type steering gear worm shaft

Lever Shaft Backlash, Adjust

1. Centralize the steering gear by turning the wheel all the way to the right. Then, starting from this point, count the number of turns required to reach end of travel to the left. Turn the wheel back half this number of turns to the mid-position.
2. Tighten the side cover adjusting screw until a very slight drag is felt through the mid-position when turning the steering wheel slowly from one side to the other. The gear should not bind in any position but a slight drag should be felt in the mid-position only.
3. After proper adjustment is secured, tighten the lock nut and give the gear a final check for binding.

GEMMER WORM & SECTOR STEERING GEAR

Power Wagon & Route Vans

In this type steering gear, Fig. 3, the worm is integral with the steering shaft and is supported on each end by opposed tapered roller bearings. The triple tooth sector and shaft is mounted in the steering gear housing in two bushings which

are pressed in the housing. The housing cover is attached to the housing by cap screws. An adjustment screw, mounted in the cover, controls sector shaft end play and worm and sector mesh adjustment.

Adjustments

Adjustment of this type steering gear is accomplished in the same manner as outlined for the Gemmer Worm & Roller type.

RECIRCULATING BALL STEERING GEAR

A worm and recirculating ball type steering gear is used with the manual steering gear system, Figs. 4, 5 and 6. The steering worm shaft is a "stub" type and is connected to the steering shaft with a universal joint type coupling. The worm shaft is supported on each end by ball type thrust bearings. The sector shaft rotates in two needle bearings in the steering housing and a needle bearing in the housing cover.

Two adjustments are required: worm bearing pre-load, and ball nut and sector gear mesh. These adjustments must be made carefully and in the order given to ensure satisfactory results.

Worm Bearing Pre-load

1. Disconnect steering gear arm from sector shaft.
2. Loosen sector shaft adjusting screw lock nut and back out adjusting screw approximately two turns. This relieves the load imposed by the closely meshed ball nut and sector gear teeth.
3. Turn steering wheel two complete turns from straight-ahead position. *Do not turn steering wheel hard against stops in gear when steering gear arm is disconnected as internal damage might result.*
4. Remove horn button and spring. With an inch-lb. torque wrench and socket on steering wheel nut, rotate wheel at least one turn (toward straight-ahead position). The torque required to keep the wheel moving should be 5-9 inch lbs.
5. To adjust the pre-load, loosen the lock nut on the large adjuster nut which threads into the housing. Turn the adjuster clockwise to increase pre-load or counter-clockwise to decrease the pre-load.

Ball Nut and Sector Gear Mesh

The sector shaft adjusting screw, located in the housing cover, raises or lowers the shaft to provide the proper mesh load between the tapered teeth of the sector gear and tapered teeth of the ball nut. This adjustment is made only after the proper worm bearing pre-load has been obtained.

1. Turn steering wheel gently from one stop all the way to the other, carefully counting the number of turns. Then turn the wheel back exactly half way, to the center position.
2. Turn the sector shaft adjusting screw lockwise to take out all lash between the gear teeth, then tighten the adjusting screw lock nut.
3. Turn steering wheel about ¼ turn away from center and using an inch-lb. torque wrench and socket on the steering wheel nut, check the torque required to pull the steering wheel through the high spot (center) position. The torque reading should be between 5-11 inch-lbs. more than worm bearing preload. This represents the total of the worm bearing preload and the steering gear mesh preload. Readjust if necessary to obtain proper torque. Total torque reading should not exceed 18 inch lbs.
4. After the adjustments have been completed, align front wheels in the straight-ahead position. Then install steering arm on sector shaft and tighten retaining nut to 85 ft. lbs.

FORD STANDARD TRUCKS

INDEX OF SERVICE OPERATIONS

PAGE NO.

AXLES, DRIVING

Eaton Axle Service 176
Ford Axles 609
Four Wheel Drive 613
Locking Differentials 169
Timken Axle Service 209

BRAKES

Adjustments 252
Air Brake System 259
Hydraulic Brake System 250
Vacuum Brake Boosters 268

CLUTCH 597

COOLING SYSTEM

Cooling System Capacity 567
Radiator, Replace 592
Thermostatic Fan 594
Water Pump Repairs 592
Water Pump, Replace 592

ELECTRIC SYSTEM

Alternators & Regulators 37
Alternator Specifications 571
Dash Gauge Service 93
Distributor Specifications 573
Distributor Service 7
Generator Specifications 572
Generator & Regulator Service 27
Ignition, Transistorized 22
Ignition Timing 594
Starting Motor Specifications 571
Starting Motor Service 65
Starter Switch Service 85

PAGE NO.

ENGINE

Camshaft & Bearings 588
Crankshaft Bearing Specifications 570
Crankshaft End Play 590
Crankshaft Oil Seal, Replace 590
Cylinder Head, Replace 580
Engine Identification 575
Engine, Replace 576
Main Bearings, Replace 589
Piston Pins, Replace 589
Piston Rings, Replace 589
Piston & Ring Specifications 570
Pistons & Rods, Remove 588
Piston & Rod, Assemble 588
Pistons, Replace 589
Rocker Arm Service 584
Rod Bearings, Replace 589
Timing Chain 588
Timing Gear Cover 586
Timing Gears 587
Valves, Adjust 582
Valve Arrangement 582
Valves, Grind 583
Valve Guides 583
Valve Lifters 586
Valve Rotators 584
Valves, Remove 582
Valve Seat Inserts 584
Valve Spring Installed Height 583
Valve Spring Testing 584
Valve Specifications 569
Valve Stems, Grinding 584

ENGINE OILING

Crankcase Capacity 567
Crankcase Ventilation 6
Oil Pan, Replace 591
Oil Pump Repairs 591

PAGE NO.

FUEL SYSTEM

Carburetor Adjustments 595
Carburetor Governors 596
Carburetor Service Notes 594
Crankcase Ventilation 6
Fuel Pump Service 104
L.P.G. Carburetion 109

SPECIFICATIONS

Alternator & Regulator 571
Carburetor Adjustment 595
Crankshaft & Bearing 570
Distributor 573
Engine Tightening Torque 570
Generator & Regulator 572
Piston, Pin & Ring 570
Starting Motor 571
Tune Up 569
Valve 569
Wheel Alignment 574

STEERING GEARS 614

TRANSFER CASES 242

TRANSMISSIONS

Clark 110
Cruise-O-Matic 300
Cruise-O-Matic Linkage 603
Ford 599
Ford-O-Matic 300
Ford-O-Matic Linkage 603
Fuller 122
New Process 135
Spicer 141
Transmatic 281
Transmatic Linkage 606
Warner 164

TUNE UP SERVICE 2

MODEL INDEX & ENGINE APPLICATION

Model	Year	Engine Make	Engine Model	Crankcase Refill Capacity, Qts.	Cooling System Capacity, Qts.
CONVENTIONAL SERIES					
F-1-C	1952	Own	6–215	5	15
F-2-D	1952	Own	6–215	5	15
F-3-J	1952	Own	6–215	5	15
F-3-Y	1952	Own	6–215	5	15
F-4-TL	1952	Own	6–215	5	16
F-5-JH	1952	Own	6–215	5	16
F-5-T	1952	Own	6–215	5	16
F-5-W	1952	Own	8–239	5	23
F-6-T	1952	Own	6–226	5	17
F-6-TH	1952	Own	6–254	6	19
F-6-WH	1952	Own	8–239	5	23
F-7-Q	1952	Own	8–279	8	23¾
F-8-QH	1952	Own	8–317	8	23¾
F-100	1953	Own	6–215	5	18½
F-100	1953	Own	8–239	5	24½
F-100	1954–56	Own	6–223	5	18½
F-100	1957–63	Own	6–223	5	17½
F-100	1954–55	Own	8–239	5	22
F-100	1956–58	Own	8–272	5	23
F-100	1959–63	Own	8–292	5	21
F-250	1953	Own	6–215	5	18½
F-250	1953–55	Own	8–239	5	24½
F-250	1954–58	Own	6–223	5	18½
F-250	1959–63	Own	6–223	5	17½
F-250	1956–58	Own	8–272	5	23
F-250	1959–63	Own	8–292	5	21
F-350	1953	Own	6–215	5	18½
F-350	1954–58	Own	6–223	5	18½
F-350	1959–63	Own	6–223	5	17½
F-350	1954–55	Own	8–239	5	22
F-350	1956–58	Own	8–272	5	23
F-350	1959	Own	8–292	5	23
F-350	1960–63	Own	8–292	5	22
F-500	1953	Own	6–215	5	18½
F-500	1953–55	Own	8–239	5	24½
F-500	1954–58	Own	6–223	5	18½
F-500	1959–63	Own	6–223	5	17½
F-500	1959–63	Own	8–292	5	22
F-600	1953	Own	8–239	5	24½
F-600	1953	Own	6–254	5	20
F-600	1954–55	Own	8–239	5	22
F-600	1954–55	Own	8–256	6	22½
F-600	1956–58	Own	6–223	5	18½
F-600	1959–63	Own	6–223	5	17½
F-600	1956–58	Own	8–272	5	23
F-600	1959–63	Own	8–292	5	22
F-600	1961–63	Own	6–262	6	
F-700	1953	Own	6–254	6	20
F-700	1954–55	Own	8–256	6	22½
F-700	1956–58	Own	8–272	5	23
F-700	1959–63	Own	8–292	5	22
F-750	1953	Own	8–279	8	25
F-750	1954–55	Own	8–279	8	26
F-750	1956–58	Own	8–302	8	27
F-750	1959–63	Own	8–302	8	26
F-800	1953	Own	8–317	8	25
F-800	1954–55	Own	8–317	8	26
F-800	1956–58	Own	8–332	8	27
F-800	1959–63	Own	8–332	8	26
F-850	1958–63	Own	8–401	9	46
F-900	1953–55	Own	8–317	8	25
F-900	1956–58	Own	8–332	8	27
F-950	1958–63	Own	8–401	9	46
F-950	1960–63	Own	8–477	9	46
F-1000	1958–63	Own	8–477	9	46
F-1000	1960–63	Own	8–534	9	47
F-1100	1958–63	Own	8–477	9	46
F-1100	1960–63	Own	8–534	9	47
TILT CAB SERIES					
C-500	1953–55	Own	8–239	5	24½
C-500	1956	Own	8–272	5	23
C-550	1957–58	Own	8–272	5	23
C-550	1959–63	Own	8–292	5	28
C-550	1961–63	Own	6–262	6	
C-600	1953	Own	8–239	5	24½
C-600	1954–55	Own	8–239	5	22
C-600	1956–58	Own	8–272	5	23
C-600	1959–63	Own	8–292	5	28
C-600	1961–63	Own	6–262	6	
C-700	1956–58	Own	8–272	5	23
C-700	1959–63	Own	8–292	5	28
C-750	1953	Own	8–279	8	25
C-750	1954–55	Own	8–279	8	26
C-750	1956–58	Own	8–302	8	27
C-750	1959–63	Own	8–302	8	29
C-800	1953	Own	8–317	8	25
C-800	1954–55	Own	8–317	8	26
C-800	1956–58	Own	8–332	8	27
C-800	1959–63	Own	8–332	8	29
C-850	1958–63	Own	8–401	9	51
C-900	1954–55	Own	8–317	8	26
C-900	1956–58	Own	8–332	8	27
C-900	1959–63	Own	8–332	8	29
C-950	1958–63	Own	8–401	9	51
C-950	1960–63	Own	8–477	9	51
C-1000	1958–63	Own	8–477	9	51
C-1000	1960–63	Own	8–534	9	52
C-1100	1958–63	Own	8–477	9	51
C-1100	1960–63	Own	8–534	9	52
TANDEM AXLE SERIES					
T-700	1954–55	Own	8–256	6	22½
T-700	1954–55	Own	8–279	8	26
T-700	1956–58	Own	8–272	5	23
T-700	1956–58	Own	8–292	5	27
T-700	1959–63	Own	8–292	5	28
T-750	1956	Own	8–302	8	27
T-750	1956–58	Own	8–332	8	27
T-750	1959–63	Own	8–332	8	29
T-800	1954–55	Own	8–317	8	26
T-800	1956–58	Own	8–332	8	27
T-800	1959–63	Own	8–332	8	29
T-850	1958–63	Own	8–401	9	46
T-850	1960–63	Own	8–477	9	46
T-950	1958–63	Own	8–401	9	46
T-950	1960–63	Own	8–477	9	46

MODEL INDEX & ENGINE APPLICATION

SCHOOL BUS SERIES

Model	Year	Engine Make	Engine Model	Crankcase Refill Capacity, Qts.	Cooling System, Capacity, Qts.
B-500	1953	Own	6–215	5	18½
B-500	1953–55	Own	8–239	5	24½
B-500	1954–58	Own	6–223	5	18½
B-500	1959–63	Own	6–223	5	17½
B-600	1953	Own	6–254	6	20
B-600	1953–55	Own	8–239	5	24½
B-600	1954–55	Own	8–256	6	22½
B-600	1955–58	Own	6–223	5	18½
B-600	1959–63	Own	6–223	5	17½
B-600	1956–58	Own	8–272	5	23
B-600	1959–63	Own	8–292	5	22
B-600	1961–63	Own	6–262	6	
B-700	1953	Own	6–254	6	20
B-700	1954–55	Own	8–256	6	22½
B-700	1956–58	Own	8–272	6	23
B-700	1959–63	Own	8–292	5	22
B-750	1953–55	Own	8–279	8	25
B-750	1956–58	Own	8–302	8	27
B-750	1959–63	Own	8–302	8	26

PARCEL DELIVERY SERIES

Model	Year	Engine Make	Engine Model	Crankcase Refill Capacity, Qts.	Cooling System, Capacity, Qts.
P-350	1953	Own	6–215	5	18½
P-350	1954–63	Own	6–223	5	18½
P-350	1957–58	Own	8–272	5	23
P-350	1959–63	Own	8–292	5	22
P-400	1957–58	Own	8–272	5	23
P-400	1959–63	Own	8–292	5	22
P-400	1957–63	Own	6–223	5	18½
P-500	1957–58	Own	8–272	5	23
P-500	1959–63	Own	8–292	5	22
P-500	1953	Own	6–215	5	18½
P-500	1954–63	Own	6–223	5	18½

HIGH TILT CAB SERIES

HT-850	1961–63	Own	8–401	9	51
H-950	1961–63	Own	8–534	9	51
HT-950	1961–63	Own	8–534	9	51
H-1000	1961–63	Own	8–534	9	51

GENERAL ENGINE SPECIFICATIONS

Year	Engine Model	No. Cyls. & Valve Location	Bore & Stroke	Piston Displacement, Cu. In.	Compression Ratio	Maximum Brake H. P. @ R. P. M.	Maximum Torque, Lb. Ft. @ R. P. M.	Normal Oil Pressure Lbs.
1952–53	6–215	6 In Head	3.5625 x 3.600	215	7.00	101 @ 3500	185 @ 1300	40
	8–239	8 In Block	3.1875 x 3.750	239	6.80	106 @ 3500	194 @ 1900	40
	6–254	6 In Block	3.5000 x 4.400	254	6.80	112 @ 3500	217 @ 1400	40
	8–279	8 In Head	3.5625 x 3.500	279	7.20	152 @ 3800	246 @ 1800	40
	8–317	8 In Head	3.8000 x 3.500	317	7.20	170 @ 3900	286 @ 1800	40
1954	6–223	6 In Head	3.6250 x 3.600	223	7.20	115 @ 3900	193 @ 1000	40
	8–239	8 In Head	3.5000 x 3.100	239	7.20	130 @ 4200	193 @ 1000	40
	8–256	8 In Head	3.6250 x 3.100	256	7.20	138 @ 3900	226 @ 1900	40
	8–279	8 In Head	3.5625 x 3.500	279	7.20	152 @ 3800	246 @ 1800	40
	8–317	8 In Head	3.8000 x 3.500	317	7.20	170 @ 3900	286 @ 1800	40
1955	6–223	6 In Head	3.6250 x 3.600	223	7.50	118 @ 3900	193 @ 1000	40
	8–239	8 In Head	3.5000 x 3.100	239	7.50	132 @ 4200	215 @ 1800	40
	8–256	8 In Head	3.6250 x 3.100	256	7.50	140 @ 3900	228 @ 1900	40
	8–279	8 In Head	3.5625 x 3.500	279	7.20	152 @ 3800	246 @ 1800	40
	8–317	8 In Head	3.8000 x 3.500	317	7.20	170 @ 3900	286 @ 1800	40
1956	6–223	6 In Head	3.6250 x 3.600	223	8.00	133 @ 4000	202 @ 1600	45
	8–272	8 In Head	3.6250 x 3.300	272	8.00	167 @ 4400	260 @ 2400	45
	8–302	8 In Head	3.6250 x 3.660	302	7.60	175 @ 3800	279 @ 2000	45
	8–332	8 In Head	3.8000 x 3.660	332	7.60	190 @ 3800	306 @ 2000	45
1957	8–302	8 In Head	3.6250 x 3.660	302	7.50	196 @ 3800	299 @ 2500	45
1957–58	6–223	6 In Head	3.6250 x 3.600	223	8.30	139 @ 4200	207 @ 2250	45
	8–272	8 In Head	3.6250 x 3.300	272	8.30	171 @ 4400	260 @ 2350	45
	8–332	8 In Head	3.8000 x 3.660	332	7.60	212 @ 3800	328 @ 2500	45
1958	8–302	8 In Head	3.6250 x 3.660	302	7.60	196 @ 3800	299 @ 2500	45
	8–401	8 In Head	4.1250 x 3.750	401	7.50	190 @ 3600	350 @ 1800	55
	8–477	8 In Head	4.5000 x 3.750	477	7.50	224 @ 3400	430 @ 1800	55
	8–534	8 In Head	4.5000 x 4.200	534	7.50	246 @ 3200	490 @ 1800	55

GENERAL ENGINE SPECIFICATIONS continued

Year	Engine Model	No. Cyls. & Valve Location	Bore & Stroke	Piston Displacement, Cu. In.	Compression Ratio	Maximum Brake H. P. @ R. P. M.	Maximum Torque, Lb. Ft. @ R. P. M.	Normal Oil Pressure Lb.
1959	6-223	6 In Head	3.6250 x 3.600	223	8.10	139 @ 4200	208 @ 2000	45
	8-292	8 In Head	3.7500 x 3.300	292	7.60	186 @ 4000	269 @ 2200	45
	8-302	8 In Head	3.6250 x 3.660	302	7.50	196 @ 3800	299 @ 2500	50
	8-332	8 In Head	3.8000 x 3.660	332	7.50	212 @ 3800	328 @ 2500	50
	8-401	8 In Head	4.1250 x 3.750	401	7.50	226 @ 3800	350 @ 1800	50
1959	8-477	8 In Head	4.5000 x 3.750	477	7.50	260 @ 3600	430 @ 1800	50
	8-534	8 In Head	4.5000 x 4.200	534	7.50	277 @ 3400	490 @ 1800	50
1960-63	6-223	6 In Head	3.6250 x 3.600	223	8.10	139 @ 4200	203 @ 2600	45
	6-262	6 In Head	3.7187 x 4.031	262	8.00	152 @ 4000	238 @ 1800	45
	8-292M.D.	8 In Head	3.7500 x 3.300	292	7.60	172 @ 4000	270 @ 2600	45
	8-292H.D.	8 In Head	3.7500 x 3.300	292	7.90	180 @ 4000	274 @ 2800	45
	8-302	8 In Head	3.6250 x 3.660	302	7.60	194 @ 3800	290 @ 2600	50
	8-332	8 In Head	3.8000 x 3.660	332	7.60	205 @ 3800	312 @ 2600	50
	8-401	8 In Head	4.1250 x 3.750	401	7.50	226 @ 3800	350 @ 1800	50
	8-477	8 In Head	4.5000 x 3.750	477	7.50	260 @ 3600	430 @ 1800	50
	8-534	8 In Head	4.5000 x 4.200	534	7.50	270 @ 3200	481 @ 1900	50

TUNE UP & VALVE SPECIFICATIONS

Year	Engine Model	Firing Order	Spark Plugs		Breaker Gap, In.	Ignition Timing		Valve Seat Angle, Degrees	Valve Clearance H-Hot C-Cold		Valve Spring Installed Height
			Type	Gap		Timing Mark	Location		Intake	Exhaust	
1952-53	6-215	153624	H8	.025	.025	Groove	Damper	45	.015H	.015H	1 25/32
1954	6-223	153624	H8	.025	.025	5° ①	Damper	45	.015H	.019H	1 25/32
1955	6-223	153624	860	.030	.025	5° ①	Damper	45	.015H	.019H	1 25/32
1956	6-223	153624	860	.030	.025	5°	Damper	45	.019H	.019H	1 25/32
1957-63	6-223	153624	860	.030	.025	6°	Damper	45	.019H	.019H	1 25/32
1952-53	8-239	15486372③	H8	.025	.015	Dot	Pulley	45	.014C	.018C	...
1954	8-239	15486372③	H8	.025	.015	Groove	Pulley	45	.019H	.019H	1 25/32
1955	8-239	15486372③	860	.030	.015	Groove	Pulley	45	.019H	.019H	1 25/32
1952-53	6-254	153624	H8	.025	.025	Groove	Damper	45	.014C	.018C	...
1954-55	8-256	15486372③	H8	.025	.015	Groove	Pulley	45	.016H	.018H	1 25/32
1961-63	6-262	153624	⑥	.030	.025	2° BTC	Damper	45	.019H	.019H	1 21/32
1956	8-272	15486372③	860	.030	.015	10°	Damper	45	.018H	.018H	1 25/32
1957	8-272	15486372③	860	.030	.015	⑤	Damper	45	.019H	.019H	1 25/32
1958	8-272	15486372③	860	.030	.015	④	Damper	45	.019H	.019H	1 25/32
1952-53	8-279	15486372③	H8	.025	.015	Groove	Damper	45	.009H	.021H	1 25/32
1954	8-279	15486372③	H8	.025	.015	10°	Damper	45	.009H	.021H	1 25/32
1955	8-279	15486372③	H8	.025	.015	10°	Damper	45	.009H	.021H	1 25/32
1958	8-292	15486372③	860	.030	.015	4°	Damper	45	.019H	.019H	1 25/32
1959-63	8-292	15486372③	⑥	.030	.015	8°	Damper	45	.018H	.018H	1 25/32
1956-57	8-302	15486372③	⑥	.030	.015	②	Damper	45	.009H	.021H	1 49/64
1958-63	8-302	15486372③	⑥	.030	.015	8°	Damper	45	.020H	.020H	1 49/64
1952-53	8-317	15486372③	H8	.025	.015	Groove	Damper	45	.009H	.021H	1 49/64
1954	8-317	15486372③	H8	.025	.015	10°	Damper	45	.009H	.021H	...
1955	8-317	15486372③	860	.030	.015	10°	Damper	45	.009H	.021H	1 25/32
1956-57	8-332	15486372③	⑥	.030	.015	8°	Damper	45	.009H	.021H	1 25/32
1958-63	8-332	15486372③	⑥	.030	.015	8°	Damper	45	.020H	.020H	1 49/64
1958-63	8-401	15486372③	⑥	.030	.015	8°	Damper	45	.020H	.020H	1 45/64
1958-63	8-477	15486372③	⑥	.030	.015	8°	Damper	45	.020H	.020H	1 45/64
1958-63	8-534	15486372③	⑥	.030	.015	8°	Damper	45	.020H	.020H	1 45/64

① Long mark represents top dead center (TDC) and each succeeding mark represents respectively 3°, 5°, 7° and 9° before TDC.
② Two-barrel carburetor 8°BTDC, four-barrel carburetor 10°BTDC.
③ Cylinder numbering (front to rear): Right bank 1-2-3-4, left bank 5-6-7-8.
④ ECW engines 5°BTDC. ECR and ECY 10°BTDC.
⑤ ECR-Y Engines 10°BTDC. ECW Engines 8°BTDC for conventional or overdrive transmissions and 10°BTDC for Fordomatic.
⑥ For city stop and go, parcel delivery, light loads and low engine speeds, use Autolite BFT-3; for all other service use BTF-31.

ENGINE TIGHTENING SPECIFICATIONS★

★Torque specifications are for clean and lightly lubricated threads only. Dry or dirty threads produce increased friction which prevents accurate measurement of tightness.

Engine	Spark Plugs Ft. Lbs.	Cylinder Head Bolts Ft. Lbs.	Intake Manifold Ft. Lbs.	Exhaust Manifold Ft. Lbs.	Rocker Arm Shaft Bracket Ft. Lbs.	Rocker Arm Cover Ft. Lbs.	Connecting Rod Cap Bolts Ft. Lbs.	Main Bearing Cap Bolts Ft. Lbs.	Flywheel to Crankshaft Ft. Lbs.	Vibration Damper or Pulley Ft. Lbs.
6-215	25-30	65-70	23-28	23-28	35-40	8-10	45-50	95-105	75-85	45-55
6-223	④	⑤	23-28	23-28	45-55	5-8	45-50	95-105	75-85	85-95
6-262	15-20	65-75	23-28	23-28	45-55	4-7	40-45	95-105	75-85	70-90
8-239	④	70	23-28	23-28	12-15	2-2½	45-50	95-105	75-85	85-95
6-254	25-30	65-70	23-28	23-28	None	None	45-50	95-105	75-85	....
8-256	④	75	23-28	23-28	12-15	2-2½	45-50	95-105	75-85	85-95
8-272	15-20	75①	23-28	23-28	12-15	5-8	45-50	95-105	75-85	85-95
8-279	④	90②	23-28	23-28	12-15③	2-2½	45-50	120-130	75-85	130-145
8-292	15-20	65-75	23-28	12-18	12-15	5-8	45-50	95-105	75-85	85-95
8-302	15-20	95-110	23-28	10-15	22-25	2-2½	45-50	120-130	75-85	130-145
8-317	④	95②	23-28	23-28	12-15③	2-2½	45-50	120-130	75-85	130-145
8-332	15-20	95-110	23-28	10-15	22-25	2-2½	45-50	120-130	75-85	130-145
8-401, 477	15-20	130-150	23-28	23-28	140	12-15	50-55	150-164	100-110	130-145
8-534	15-20	130-150	23-28	23-28	140	12-15	50-55	150-164	100-110	130-145

①—With 4-barrel carburetor 85 ft. lbs.
②—Bolts marked "FT" 110 ft. lbs.
③—With stiffening plates 22-25 ft. lbs.
④—14MM 25-30 ft. lbs. 18MM 15-20 ft. lbs.
⑤—7/16"-65-75, ½"-95-105.

PISTON, PIN, RING, CRANKSHAFT & BEARING SPECIFICATIONS

Year	Engine Model	Wristpin Diameter	Piston Clearance, Inch①	Ring End Gap, In. (Minimum)		Crank Pin Diameter, Inch	Rod Bearing Clearance, In.	Main Bearing Journal Diameter, In.	Main Bearing Clearance, Inch	Thrust On Bearing No.	Shaft End Play
				Comp.	Oil						
1952-53	6-215	.912	.0015	.007	.007	2.2980-2.2988	.0005-.0021	2.4980-2.4988	.0005-.0021	3	.004-.008
1954-56	6-223	.912	.0015	.010	.010	2.2980-2.2988	.0005-.0021	2.4980-2.4988	.0035 Max.	3	.004-.008
1957-59	6-223	.912	.0015	.010	.015	2.2980-2.2988	.0004-.0023	2.4980-2.4988	.0005-.0025	3	.004-.008
1960-63	6-223	.912	.0015	.010	.015	2.2980-2.2988	.0004-.0025	2.4980-2.4988	.0006-.0028	3	.004-.008
1961-63	6-262	.912	.0017	.010	.015	2.2980-2.2988	.0006-.0025	2.4976-2.4984	.0005-.0027	3	.004-.008
1952-53	8-239	.750	.002	.007	.007	2.1380-2.1390	.0008-.0033	2.4980-2.4990	.001-.0025	5	.004-.008
1954-55	8-239	.912	.0015	.010	.010	2.1880-2.1888	.0005-.0021	2.4980-2.4988	.0005-.0021	3	.004-.008
1952-53	6-254	.850	.0015	.007	.007	2.2980-2.2988	.0005-.0021	2.8732-2.8740	.0005-.0021	5	.004-.008
1954-55	8-256	.912	.0015	.010	.010	2.1880-2.1888	.0005-.0021	2.4980-2.4988	.0005-.0021	3	.004-.008
1956	8-272	.912	.0015	.010	.010	2.1880-2.1888	.0005-.0021	2.4980-2.4988	.0035 Max.	3	.004-.008
1957-58	8-272	.912	.0015	.010	.015	2.1880-2.1888	.0008-.0027	2.4980-2.4988	.0006-.0032	3	.004-.008
1952-55	8-279	.927	.0015	.010	.010	2.2482-2.2490	.0008-.0026	2.6235-2.6243	.0008-.0026	3	.004-.008
1959	8-292	.912	.002	.010	.015	2.1880-2.1888	.0008-.0027	2.4980-2.4988	.0006-.0032	3	.004-.008
1960-63	8-292	.912	.0015	.010	.015	2.1880-2.1888	.0005-.0024	2.4980-2.4988	.0006-.0032	3	.004-.008
1956	8-302	.912	.0015	.010	.010	2.2482-2.2490	.0008-.0026	2.6230-2.6238	.0043 Max.	3	.004-.008
1957-59	8-302	.912	.002	.010	.010	2.2482-2.2490	.0007-.0026	2.6230-2.6238	.0015-.0033	3	.004-.008
1960-63	8-302	.912	.0015	.012	.010	2.2482-2.2490	.0006-.0027	2.6230-2.6238	.0012-.0032	3	.004-.008
1952-55	8-317	.912	.0015	.010	.010	2.2482-2.2490	.0008-.0026	2.6235-2.6243	.0008-.0026	3	.004-.008
1956	8-332	.912	.0015	.010	.010	2.2482-2.2490	.0008-.0026	2.6230-2.6238	.0043 Max.	3	.004-.008
1957-59	8-332	.912	.002	.010	.010	2.2482-2.2490	.0007-.0026	2.6230-2.6238	.0015-.0033	3	.004-.008
1960-63	8-332	.912	.0015	.012	.010	2.2482-2.2490	.0006-.0027	2.6230-2.6238	.0012-.0032	3	.004-.008
1958-59	8-401	1.220	.0025	.013	.013	2.7496-2.7504	.0010-.0029	3.1246-3.1254	.0014-.0036	3	.004-.008
1960-63	8-401	1.2198	.002	.016	.013	2.7496-2.7505	.0010-.0029	3.1246-3.1254	.0018-.0039	3	.004-.008
1958-59	8-477	1.220	.0025	.013	.013	2.7496-2.7504	.0010-.0029	3.1246-3.1254	.0014-.0036	3	.004-.008
1960-63	8-477	1.2198	.002	.016	.013	2.7496-2.7505	.0010-.0029	3.1246-3.1254	.0018-.0039	3	.004-.008
1958-59	8-534	1.220	.0025	.013	.013	③	.0010-.0029	3.1246-3.1254	.0014-.0036	3	.004-.008
1960	8-534	1.2198	.002	②	.013	③	.0010-.0029	3.1246-3.1254	.0018-.0039	3	.004-.008
1961-63	8-534	1.2198	.002	②	.013	2.7092-2.7100	.0017-.0036	3.1246-3.1254	.0018-.0039	3	.004-.008

① Pistons removed from above. ② Top ring .016, others .013. ③ Standard size either 2.7496-2.7505 or 2.7092-2.7100.

STARTING MOTOR SPECIFICATIONS

Year	Unit Part No.	Brush Spring Tension, Ounces	No Load Test			Torque Test		
			Amperes	Volts	R.P.M.	Amperes	Volts	Torque, Lb. Ft.
1952–55	FAC-11001B	48–56	70	6	3000	700	3.5	16
1952–53	FAF-11001A	48–56	70	6	3000	700	3.5	16
1952–53	FAG-11001B	48–56	70	6	3000	700	3.5	16
1952–53	FAH-11001A	48–56	70	6	3000	700	3.5	16
1956	FAR-11001A	48–56	120	12	....	550	5.0	15.5
1957	7AR-11001A	48–56	80	12	....	550	5.0	15.5
1958–62	B6A-11002A	48–56	80	12	....	550	5	15.5
1958–62	B7T-11002A	35	80	12	....	525	5	14.2
1958–62	B8QH-11002A	42–53	60	12	....	525	5	17.2
1959–62	B8C-11002A	42–53	85	12	....	550	5	15.5
1962	FAY-11001A	48–56	110	12	....	580	5	14.8
1962	B6P-11001A	48–56	110	12	....	580	5	14.8
1962	CIVF-11001C	42–53	70	12	....	670	5	15.5
1962	B9TF-11001A	24	60	12	....	525	5	17.5
1963	C2AF-11001B	45	110	12	....	580	5	14.8
	2700011	42-53	60	12	....	525	5	17.2
	B9TF-11001A	24	60	12	....	525	5	17.5

FORD ALTERNATOR & REGULATOR SPECIFICATIONS

Year	Alternator					Regulator						
	Model	Field Current		Output		Model	Field Relay			Voltage Regulator		
		Amps.	Volts @ 75°F.	Amps.	Volts		Air Gap	Point Gap	Closing Voltage	Air Gap①	Lower Contact Gap①	Voltage @ 125°F.
1963	C3SF-10300B	2.9–3.1	12	40	15	C3SZ-10316A	.022–.030	.015–.022	3.0–4.0	.045–.052	.010–.015	13.8–14.6

①—With upper contacts closed.

LEECE-NEVILLE ALTERNATOR & FORD REGULATOR SPECIFICATIONS

Model Number	Alternator						Regulator			
	Rating		Field Current Draw	Cold Output			Model Number	Relay Closing Voltage	Voltage Range	Current Range
	Voltage	Amperes		Amperes	Volts	Alter. R.P.M.				
B8Q-10002A	14	50	2.4–3.0	50	14	1600	B8Q-10505A	5.6–6.4	13.5–14.3	48–52
CITF-10000D, E	15	60	2.4–3.0	60	15	3400	BGA-10175B	5.6–6.4	13.5–14.3	58–62
CITF-10300D,E①	14	60	2.4–3.0	60	14	...	C2TF-10316B	5.6–6.4	13.5–14.3①	58–62

①—Range listed is for upper contacts. Lower contacts .01 to 0.3 volt below upper range.

GENERATOR & REGULATOR SPECIFICATIONS

★To polarize generator, disconnect field lead from regulator and momentarily flash this wire to regulator battery terminal.

Generator							Regulator					
								Cutout Relay				
Year	Generator Number	Ground Polarity	Rated Cap. Amps.	Gen. Field Ground Location★	Brush Spring Tension, Ounces	Field Current, Amperes	Regulator Number	Voltage To Close Points	Armature Air Gap, Inch	Voltage Regulator Setting, Volts	Current Regulator Setting, Amperes	Current and Voltage Armature Air Gap, Inch
1963	CITF-10000③	Negative	30	Internal	20–26	1.2–1.8	CITF-10505A,B	12.4	...	15.0	30	...
	CIDF-10000C	Negative	25	Internal	20–26	1.2–1.8	CODF-10505A	12.5	...	15.0	25	...
	CITF-10000Z	Negative	40	Internal	20–26	1.2–1.8	CITF-10505C	12.4	...	15.0	40	...
	CITF-10000BY	Negative	30	Internal	20–26	1.2–1.8	CITF-10505A,B	12.4	...	15.0	30	...
	CITF-10000DA	Negative	30	Internal	20–26	1.2–1.8	CITF-10505A,B	12.4	...	15.0	30	...
1962	CITF-10000①	Negative	30	Internal	20–26②	1.2–1.8	CITF-10505	12.4	...	15.0	30	...
1962	COAF-10000-B	Negative	30	Internal	32–40	1.2–1.8	CITF-10505	12.4	...	15.0	30	...
1962	COAF-10000-G	Negative	30	Internal	32–40	1.2–1.8	CITF-10505	12.4	...	15.0	30	...
1962	COTF-1000-C	Negative	40		40	1.2–1.8	B8E-10505C	12.8	...	15.0	40	...
1962	COTF-10000-J	Negative	30	Internal	32–40	1.2–1.8	CITF-10505	12.8	...	15.0	30	...
1952–55	FAA-10000B	Positive	35	Internal	26–34	1.5–2.5	FAC-10505	6.3	...	7.6	35	...
1952–55	FAA-10000E	Positive	35	Internal	26–34	1.5–2.5	FAC-10505	6.3	...	7.6	35	...
1952–55	FAA-10000H	Positive	35	Internal	26–34	1.5–2.5	FAC-10505	6.3	...	7.6	35	...
1952–55	FAA-10000J	Positive	35	Internal	26–34	1.5–2.5	FAC-10505	6.3	...	7.6	35	...
1952–55	FAB-10000B	Positive	40	Internal	26–34	1.5–2.5	FAD-10505A	6.3	...	7.6	40	...
1952–55	FAB-10000J	Positive	40	Internal	26–34	1.5–2.5	FAD-10505A	6.3	...	7.6	40	...
1956–57	FAR-10000B	Negative	30	Internal	26–34	1.5–1.6	FAP-10505B	12.4	...	15.0	30	...
1957	FAS-10000B	Negative	30	Internal	26–34	1.5–1.6	FAP-10505B	12.4	...	15.0	30	...
1954–55	FBB-10000B	Positive	50	Internal	26–34	1.5–2.5	FAJ-10505A	6.3	...	7.6	50	...
1954–55	FBC-10000A	Positive	35	Internal	26–34	1.5–2.5	FAC-10505	6.3	...	7.6	35	...
1956	FBT-10000B	Negative	30	Internal	26–34	1.4–1.6	FAP-10505B	12.4	...	15.0	30	...
1957	FBT-10000D	Negative	30	Internal	26–34	1.5–1.6	FAP-10505B	12.4	...	15.0	30	...
1956	FBU-10000B	Negative	30	Internal	26–34	1.4–1.6	FAP-10505B	12.4	...	15.0	30	...
1956–57	FBV-10000B	Negative	30	Internal	26–34	1.5–1.6	FAP-10505B	12.4	...	15.0	30	...
1957	FBV-10000C	Negative	30	Internal	26–34	1.5–1.6	FAP-10505B	12.4	...	15.0	30	...
1957	FBW-10000C	Negative	30	Internal	26–34	1.5–1.6	FAP-10505B	12.4	...	15.0	30	...
1956	FRW-10000B	Negative	30	Internal	26–34	1.4–1.6	FAP-10505B	12.4	...	15.0	30	...
1958–59	B6A-10002C	Negative	30	Internal	16–18	1.2–1.8	FBA-10505A	12.3	...	14.4	30	...
1958–59	B6A-10002D	Negative	50	Internal	16–18	1.2–1.8	FAY-10505B	12.3	...	14.4	50	...
1958–61	B6A-10002E	Negative	40	Internal	34–41	1.2–1.8	2700017	12.8	...	15.0	40	...
1958–61	B6A-10002E	Negative	40	Internal	34–41	1.2–1.8	B8E-10505C	12.7	...	14.5	40	...
1958–61	B6A-10002F	Negative	40	Internal	34–41	1.2–1.8	2700017	12.8	...	15.0	40	...
1958–59	B6A-10002G	Negative	60	Internal	16–18	1.5–1.6	FAW-10505B	12.3	...	14.4	60	...
1958–59	B6A-10002H	Negative	30	Internal	32–40	1.7–1.8	2700015	12.8	...	15.0	30	...
1958–61	B8QH-10002A	Negative	40	Internal	32–40	1.44–1.50	2700017	12.8	...	15.0	40	...
1958–61	B8QH-10002A	Negative	40	Internal	32–40	1.44–1.50	B8E-10505C	12.4	...	15.0	40	...
1960–61	B9A-10002A	Negative	30	Internal	32–40	1.2–1.8	B6C-10505B	12.4	...	15.0	30	...
1954–55	FAD-10002A	Positive	60	Internal	26–34	1.5–2.5	FAN-10505A	6.3	...	7.3	60	...
1952–55	FAE-10002A	Positive	55	Internal	26–34	2.0–2.7	19B-10505A	13.3	...	14.2	53	...

①—Suffix A, H, K, L, M, AA. ②—Generator number 10000-A, 40 oz. ③—Suffix BK, BL, BM, BN, BV.

DISTRIBUTOR SPECIFICATIONS

Year	Engine Model	Breaker Gap In.	Cam Angle Degrees	Breaker Arm Spring Tension	Centrifugal Advance Degrees @ RMP of Dist.		Vacuum Advance Degrees @ In. of Mercury	
					Advance Starts	Full Advance	Advance Starts	Full Advance
1954–55	256	.015	26–28	17–20	None	None	3 @ 0.51	14 @ 5.3
1954–55	279	.015	26–28	17–20	None	None	3 @ 0.35	16 @ 5.6
1954–55	317	.015	26–28	17–20	None	None	2 @ 0.35	11 @ 4.5
1956	223①	.025	35–38	17–20	None	None	½ @ 0.18	13 @ 6.0
1956	223②	.025	35–38	17–20	None	None	½ @ 0.11	13 @ 4.26
1956	272③	.015	26–28	17–20	None	None	½ @ 0.15	16 @ 4.6
1956	272④	.015	26–28	17–20	None	None	½ @ 0.11	14 @ 3.33
1956	272⑤	.015	26–28	17–20	None	None	½ @ 0.11	14 @ 1.5
1956	302	.015	26–28	17–20	None	None	½ @ 0.20	14 @ 4.5
1956	332	.015	26–28	17–20	None	None	1 @ 0.18	14 @ 2.09
1957	223	.025	35–38	17–20	None	None	½ @ 0.22	12 @ 3.38
1957	272⑥	.015	26–28	17–20	None	None	½ @ 0.15	16 @ 4.60
1957	272⑦	.015	26–28	17–20	None	None	2 @ 0.26	13 @ 2.79
1957	272⑧	.015	26–28	17–20	6 @ 625	17 @ 1600	1 @ 10.0	12 @ 21.0
1957	302	.015	26–28	17–20	None	None	½ @ 0.17	11 @ 2.22
1957	332	.015	26–28	17–20	None	None	½ @ 0.17	11 @ 2.22
1958	223	.025	35–38	17–20	None	None	1 @ 0.55	11 @ 3.88
1958	272	.015	26–28	17–20	None	None	2 @ 0.26	13 @ 2.79
1958	272	.015	26–28	17–20	½ @ 300	17 @ 1500	1 @ 10.0	12 @ 21.0
1958	292	.015	26–28	17–20	1 @ 425	15 @ 2000	1 @ 6.0	7 @ 9.25
1958	292	.015	26–28	17–20	1 @ 600	13 @ 1900	None	None
1958	302	.015	26–28	17–20	1 @ 850	10 @ 2000	None	None
1958	332	.015	26–28	17–20	1 @ 850	10 @ 2000	None	None
1958	401	.015	26–28	17–20	1 @ 550	13 @ 1800	None	None
1958	447	.015	26–28	17–20	2 @ 700	13 @ 1525	None	None
1958	534	.015	26–28	17–20	1 @ 600	13 @ 1600	None	None
1959	223	.025	35–38	17–20	None	None	3 @ 0.79	11 @ 5.99
1959	292	.015	26–28	17–20	1 @ 600	13 @ 1900	None	None
1959	302	.015	26–29	17–20	1 @ 850	10 @ 2000	None	None
1959	332	.015	26–28	17–20	1 @ 850	10 @ 2000	None	None
1959	401	.015	26–28	17–20	1 @ 500	13 @ 1850	None	None
1959	447	.015	26–28	17–20	2 @ 700	13 @ 1600	None	None
1959	534	.015	26–28	17–20	1 @ 600	13 @ 1650	None	None
1960–61	223	.025	35–38	17–20	None	None	3 @ 0.79	11 @ 5.99
1961–62	6–262	.025	35–38	17–20	None	None	1 @ 0.42	11 @ 7.30
1960–61	292 M.D.	.015	26–28	17–20	1 @ 700	10 @ 1800	1 @ 5	7 @ 13
1960–61	292 H.D.	.015	26–28	17–20	1 @ 500	11½ @ 2000	None	None
1960–61	302, 332	.015	26–28	17–20	1½ @ 850	10 @ 2000	None	None
1960–61	401, 477	.015	26–28	17–20	2 @ 500	13 @ 1400	2 @ 5½	7 @ 10
1960–61	534	.015	26–28	17–20	2 @ 500	13 @ 1400	2 @ 5½	7 @ 10
1962	6-223	.025	35–38	17–20	None	None	1 @ 0.48	11 @ 4.80
	6-262	.025	35–38	17–20	None	None	1 @ 0.42	11 @ 7.30
	8-292 M.D.	.015	26–28	17–20	1 @ 700	10 @ 1800	1 @ 5	8 @ 13
	8-292 H.D.	.015	26–28	17–20	1 @ 500	12 @ 2000	None	None
	8-302, 332	.015	26–28	17–20	1 @ 425	12 @ 2000	3 @ 7½	8 @ 14
	8-401, 477	.015	26–28	17–20	2 @ 500	13 @ 1400	2 @ 5½	7 @ 10
	8-534	.015	26–28	17–20	2 @ 500	13 @ 1400	2 @ 5½	7 @ 10
1963	6-223	.025	35–38	17–20	None	None	1 @ 0.30	14 ¾ @ 8
	6-262	.025	35–38	17–20	None	None	1 @ 0.42	13 @ 10
	8-292 M.D.	.015	26–28	17–20	1 @ 700	15 @ 2000	1 @ 6	6 @ 12
	8-292 H.D.	.015	26–28	17–20	1 @ 500	12 @ 2000	None	None
	8–302, 332	.015	26–28	17–20	1 @ 425	12 @ 2000	3 @ 7½	8½ @ 14
	8-302, 332	.015	26–28	17–20	1½ @ 850	10 @ 2000	None	None
	8-401, 477	.015	26–28	17-20	2 @ 500	14 @ 1400	2 @ 5½	8 @ 10
	8-534	.015	26–28	17–20	2 @ 500	14 @ 1400	2 @ 5½	8 @ 10

①—With oil bath air cleaner.
②—With dry type air cleaner.
③—ECY and ECW engines.
④—ECR engine with 2-barrel carb.
⑤—With 4-barrel carb.
⑥—ECW engine.
⑦—ECR engine.
⑧—ECY engine.
⑨—8–401, 477, 534 engines.

WHEEL ALIGNMENT SPECIFICATIONS

Model	Year	Caster, Degrees		Camber Degrees	Toe-In, Inch	Kingpin Angle, Degrees
		Conv. Steering①	Power Steering			
F1,2,3	1952	3½	—	1	1/16	8
F4,5,6	1952	2¼	—	1	1/16	8¼
F7	1952	2	—	1	1/16	8
F8	1952	2	—	1	1/16	8
F100	1953–56	3½	—	1	1/16	4
F100	1957–63	3	6	1	1/16	4②
F250	1953–56	3½	—	1	1/16	4
F250	1957–63	3	6	1	1/16	4②
F350	1953–56	4	—	1	1/16	4
F350	1957–63	3¾	6¾	1	1/16	4
P350	1953–56	4	—	1	1/16	4
P350	1957–63	4	4	1	1/16	4
P400	1957–59	3	6¾	1	1/16	4
P400	1960–63	3	6	1	1/16	4
C500	1953–55	4	—	1	1/16	4
C500	1956	3¼	—	1	1/16	4
F500	1953–56	4	—	1	1/16	4
F500 130″W.B.	1957–63	3¼	6¾	1	1/16	4
F500 154″W.B.	1957–63	4½	7½	1	1/16	4
B500	1958–63	4½	7½	1	1/16	4
P500	1953–55	4	—	1	1/16	4
P500	1956	3¼	—	1	1/16	4
P500 137″W.B.	1957–63	3	6	1	1/16	4
P500 154″W.B.	1957–63	3½	6½	1	1/16	4
C550	1957–63	3	6	1	1/16	5½
B600	1958–63	4½	7½	1	1/16	4
C600	1953–55	4	—	1	1/16	4
C600	1956	3¼	—	1	1/16	4
C600	1957–59	3	6	1	1/16	5½
C600	1960–63	3	3	1	1/16	5½
F600	1953–55	4	—	1	1/16	4
F600	1956–63	4½	7½	1	1/16	4
B700	1958–63	3	3	1	1/16	5½
C700	1956	4	—	1	1/16	5½
F700	1953–55	4	—	1	1/16	8
F700	1956	4	—	1	1/16	5½
F700	1957–63	3	3	1	1/16	5½
T700	1954–56	4	—	1	1/16	5½
T700	1957–63	3	3	1	1/16	5½
B750	1958–63	3	3	1	1/16	5½
C750	1953–56	4	—	1	1/16	5½
C750	1957–63	3	3	1	1/16	5½
F750	1953–55	4	—	1	1/16	8
F750	1956	4	—	1	1/16	5½
F750	1957–63	3	3	1	1/16	5½
T750	1957–63	3	3	1	1/16	5½
C800	1953–56	4	—	1	1/16	5½
C800③	1957–63	3	3	1	1/16	5½
C800④	1957–63	3	3	1	1/16	5½
C800⑤	1957–63	—	3	1	1/16	5½
C800⑥	1957–63	—	3	1	1/16	8
F800	1953–56	4	—	1	1/16	5½
F800	1957–63	3	3	1	1/16	5½

Model	Year	Caster, Degrees		Camber Degrees	Toe-In, Inch	Kingpin Angle, Degrees
		Conv. Steering①	Power Steering			
T800	1954–56	4	—	1	1/16	5½
T800④	1957–63	3	3	1	1/16	5½
T800⑤	1957–63	—	3	1	1/16	5½
T800⑥	1957–59	—	3¼	1	1/16	8
T800⑥	1960–63	—	3 7/16	1	1/16	8
C850③	1957–63	3	3	1	1/16	5½
C850④	1957–63	3	3	1	1/16	5½
C850⑤	1957–63	—	3	1	1/16	5½
C850⑥	1957–63	—	3	1	1/16	8
F850③	1957–63	3	3	1	1/16	5½
F850⑤	1957–63	—	3	1	1/16	5½
HT850	1961–63	3¼	3¼	1	1/16	8
T850④	1957–63	3	3	1	1/16	5½
T850⑤	1957–63	—	3	1	1/16	5½
T850⑥	1957–59	—	3¼	1	1/16	8
T850⑥	1960–63	—	3 7/16	1	1/16	8
C900	1953–56	4	—	1	1/16	5½
C900	1957–58	3	3	1	1/16	5½
F900	1953–56	4	—	1	1/16	5½
F900	1957–63	3	3	1	1/16	5½
C950④	1958–63	3	3	1	1/16	5½
C950⑤	1958–63	—	3	1	1/16	5½
C950⑥	1958–59	—	3	1	1/16	8
C950⑥	1960–63	—	2⅞	1	1/16	8
F950	1958–63	3	3	1	1/16	5½
H950	1961–63	3¼	3¼	1	1/16	8
HT950	1961–63	3¼	3¼	1	1/16	8
T950④	1958–63	3¼	3¼	1	1/16	5½
T950⑤	1958–63	—	3¼	1	1/16	5½
T950⑥	1958–59	—	3¼	1	1/16	8
T950⑥	1960–63	—	3 7/16	1	1/16	8
C1000④	1958–63	3	3	1	1/16	5½
C1000⑤	1958–63	—	3	1	1/16	5½
C1000⑥	1958–59	—	3	1	1/16	8
C1000⑥	1960–63	—	2⅞	1	1/16	8
F1000④	1958–63	3¼	3¼	1	1/16	5½
F1000⑤	1958–63	—	3¼	1	1/16	5½
F1000⑥	1958–59	—	3¼	1	1/16	8
F1000⑥	1960–63	—	3 7/16	1	1/16	8
H1000	1961–63	3¼	3¼	1	1/16	8
C1100④	1958–63	3	3	1	1/16	5½
C1100⑤	1958–63	—	3	1	1/16	5½
C1100⑥	1958–59	—	3	1	1/16	8
C1100⑥	1960–63	—	2⅞	1	1/16	8
F1100④	1958–63	3¼	3¼	1	1/16	5½
F1100⑤	1959–63	—	3¼	1	1/16	5½
F1100⑥	1958–59	—	3¼	1	1/16	8
F1100⑥	1960–63	—	3 7/16	1	1/16	8

①—Plus or minus ½°.
②—Four wheel drive 7½°.
③—With 7000 lb. axle.
④—With 9000 lb. axle.
⑤—With 11000 lb. axle.
⑥—With 15000 lb. axle.

ENGINE IDENTIFICATION—Ford Truck Identification Plate located on inside of truck cab or on firewall. To identify engine and transmission, refer to code tables. Engine Code Table is given below; see transmission section of this manual for Transmission Code Table. Information stamped on plate represents only the equipment on the truck when it was shipped from the factory.

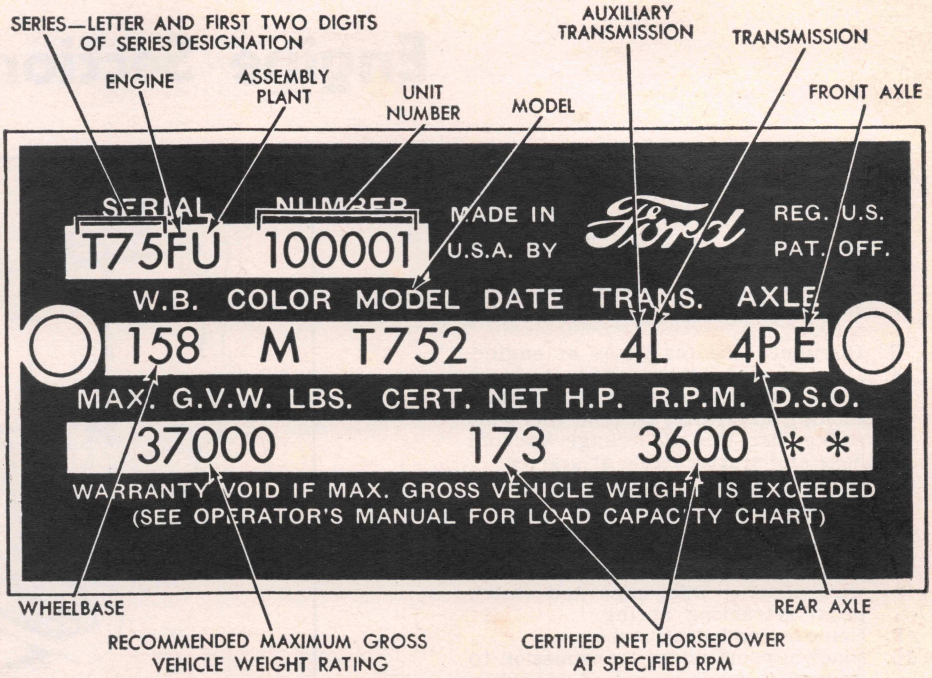

ENGINE CODE IDENTIFICATION

1952

Code	Engine	Carburetion
D	6-215	1 Barrel
E	8-337	2 Barrel
H	6-226	1 Barrel
J	8-279	2 Barrel
K	8-317	2 Barrel
M	6-254	1 Barrel
R	8-239	2 Barrel

1953

D	6-215	1 Barrel
J	8-279	2 Barrel
K	8-317	2 Barrel
M	6-254	1 Barrel
R	8-239	2 Barrel

1954-55

D	6-223	1 Barrel
J	8-279	2 Barrel
K	8-317	2 Barrel
V	8-239	2 Barrel
Z	8-256	2 Barrel

1956

A	8-302	4 Barrel
D	6-223	1 Barrel
J	8-302	2 Barrel
K	8-332	2 Barrel
R	8-272②	4 Barrel
S	8-332	4 Barrel
V	8-272①	2 Barrel
Z	8-272②	2 Barrel

①Light duty. ②Heavy duty.

1957

F	8-332	4 Barrel
J	6-223	1 Barrel
K	8-272①	2 Barrel
L	8-272②	2 Barrel
N	8-302	4 Barrel
U	8-272②	4 Barrel

①Light duty. ②Heavy duty.

1958-59

C	8-292	2 Barrel
D	8-292	4 Barrel
F	8-332	4 Barrel
J	6-223	1 Barrel
L	8-272	2 Barrel
N	8-302	4 Barrel
P	8-401	4 Barrel
Q	8-477	4 Barrel
R	8-534	4 Barrel
U	8-272	4 Barrel

1960

C	8-292	2 Barrel
D	8-292	4 Barrel
F	8-332	4 Barrel
G	8-401	2 Barrel
H	8-477	2 Barrel
J	6-223	1 Barrel
N	8-302	4 Barrel
P	8-401	4 Barrel
Q	8-477	4 Barrel
R	8-534	4 Barrel

1961-63

A①	6-223	1 Barrel
B	6-262	1 Barrel
C	8-292	2 Barrel
D	8-292	4 Barrel
F	8-332	4 Barrel
G	8-401	2 Barrel
H	8-477	2 Barrel
J	6-223	1 Barrel
N	8-302	4 Barrel
P	8-401	4 Barrel
Q	8-477	4 Barrel
R	8-534	4 Barrel

①Economy model.

1961-63 Diesels

V	NH-180	....
W	NH-195	....
X	NH-220	....
Y	NHE-180	....
Z	NHE-195	....

Engine Section

ENGINE, REPLACE

1952
8-239 Conventional Trucks

1. Drain radiator and crankcase.
2. Remove hood, air cleaner and battery.
3. Disconnect heater hoses at engine.
4. Disconnect generator wires, temperature sending unit wire, oil pressure sending unit wire, flexible fuel line, choke wire, throttle linkage, vacuum hose and starter cable at starter.
5. Remove upper radiator hoses.
6. Remove fan and belt, generator and belt.
7. Remove radiator.
8. Disconnect ignition switch-to-coil wire, muffler inlet pipe and clutch pedal retracting spring.
9. Remove road draft tube.
10. Place support under transmission to prevent it dropping out of line when engine is removed.
11. Install engine lift hook and take up slack with a hoist.
12. Remove engine front bolts, and transmission-to-flywheel housing bolts.
13. Pull engine away from transmission and lift it from engine compartment.
14. Reverse the foregoing procedure to install the engine.

1952
8-239 Cab-Over-Engine Trucks

1. Drain crankcase and cooling system.
2. Remove hood, air cleaner, flexible tube, floor pan over engine and dash panel.
3. Remove oil filter lines.
4. Remove either front wheel.
5. Remove grille assembly.
6. Disconnect radiator and its support.
7. Disconnect generator wires, ignition switch-to-coil wire, temperature sending unit wire, oil pressure sending unit wire, vacuum hose at intake manifold, starter cable at starter, throttle linkage, choke wire, heater hoses, flexible fuel line, muffler inlet pipe and clutch release bearing spring.
8. Remove engine front support bolts.
9. Remove generator, carburetor, crankcase inlet pipe and fuel pump.
10. Install engine lift hook and take up slack with hoist.
11. Unfasten transmission from flywheel housing.
12. Move engine away from transmission and out of the engine compartment.
13. Reverse the foregoing procedure to install the engine.

1952-53 Parcel Delivery Trucks

1. Drain crankcase and cooling system.
2. Remove hood and radiator support bar.

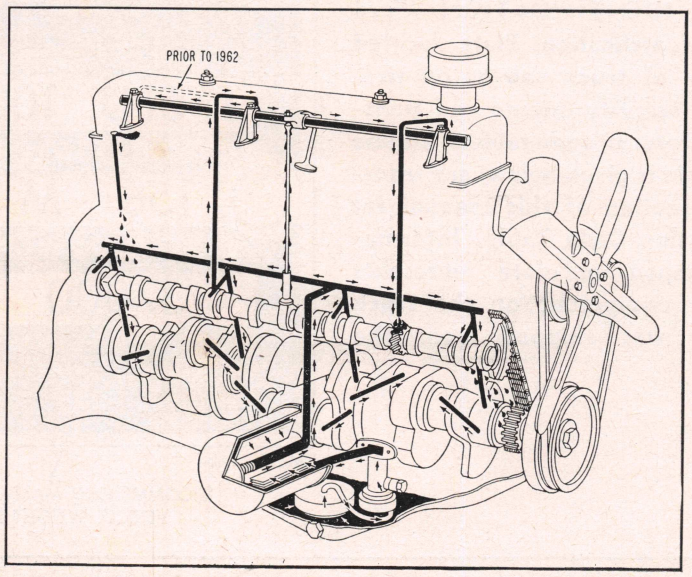

Engine oiling diagram. 6-223 engine

3. Disconnect upper radiator hose.
4. Remove fan shroud from radiator and lean shroud against engine.
5. Remove radiator support and radiator and lift out fan shroud.
6. Remove engine compartment rear cover.
7. Open engine compartment front cover and attach hook at left corner near hinge to keep it open.
8. Remove weatherstrip retaining panel at rear edge of engine compartment rear cover.
9. Remove air cleaner and flexible tube.
10. Disconnect generator wires, ignition switch-to-coil wire, temperature sending unit wire, oil pressure sending unit wire, vacuum hose at intake manifold, starter cable at starter, throttle linkage, choke wire, heater hoses, flexible fuel line, muffler inlet pipe, clutch release bearing spring, and hand brake cable where it is clipped to the transmission.
11. Fasten engine lift bracket to cylinder head.
12. Project portable floor crane through right-hand door. Connect crane chain to lift bracket and take up engine weight. Remove engine front support bolts. Unfasten transmission from flywheel housing.
13. Move engine far enough forward to clear transmission mainshaft. Then lift engine and move it through the door.
14. Reverse the foregoing procedure to install the engine.

1952 6-215 Conventional Trucks

1. Drain cooling system.
2. Remove hood.
3. Disconnect battery ground cable at engine, temperature sending unit wire, oil pressure sending unit wire, primary coil wire and starter cable at starter.
4. Disconnect generator wires, windshield wiper vacuum hose, choke control, hand throttle control, and accelerator rod and spring at carburetor.
5. Remove air cleaner and tape carburetor opening closed.
6. Disconnect radiator upper hose at engine, lower hose at radiator and heater hose at engine.
7. Remove fan and belt.
8. Remove fan shroud and radiator.
9. Disconnect muffler inlet pipe.
10. Shut off fuel valve at tank and disconnect flexible fuel line to pump.
11. *If engine and transmission are to be removed as an assembly, disconnect drive shaft and pull it out of transmission extension. Remove transmission extension support bolts.*
12. If the engine is to be removed without the transmission, remove the transmission retaining bolts and disconnect the clutch return spring. Support transmission with a jack.
13. Remove engine front support nuts.
14. Install engine lift and with a hoist, carefully lift engine out of chassis.
15. Reverse the foregoing procedure to install the engine.

1953 (Except Super Duty Jobs)

1. Drain cooling system.
2. Drain crankcase.
3. Remove hood.
4. Remove fan and belt.
5. Remove radiator and shroud.
6. *On trucks equipped with air compressor, open air reservoir drain*

cock. Loosen fitting at reservoir inlet line. Disconnect air line and clip at front of engine and lay line against engine side compartment.

7. Remove air cleaner and tape carburetor air horn closed.
8. Disconnect vacuum hose at manifold, hand throttle control, choke cable, accelerator rod and spring at carburetor.
9. Disconnect temperature sending unit wire, oil pressure sending unit wire, ignition coil primary wire, generator wires, flexible fuel line at fuel pump, muffler inlet pipe at exhaust manifold, clutch release lever retracting spring, starter cable at starter and battery ground strap at engine.
10. Remove starter and install engine lifting sling.
11. Remove flywheel housing-to-engine bolts, and remove flywheel housing lower cover.
12. Remove engine front support bolts.
13. Take up weight of engine with a hoist. Support transmission with a jack and move the engine forward to separate the clutch from the transmission input shaft. Then lift engine from chassis.
14. Reverse the foregoing procedure to install the engine.

1953-56 Cab Forward Trucks

1. Drain cooling system.
2. Drain crankcase.
3. Disconnect throttle return spring.
4. Remove floor mat, battery cover and floor pan. Disconnect one battery cable to break circuit.
5. Disconnect coil primary wire and ground wire at coil mounting bracket.
6. Remove screws retaining loom clip, tail light wire clip and speedometer cable and move wires and speedometer cable out of the way.
7. Remove distributor cap and rotor.
8. Remove fan and belt.
9. Remove air cleaner and tape carburetor air horn closed.
10. Disconnect radiator and heater hoses.
11. Remove upper and center grille sheet metal, radiator, shroud and radiator-to-front fender apron supports.
12. Disconnect hand throttle control, choke control and accelerator linkage.
13. Remove vacuum hose at intake manifold or vacuum pump inlet.
14. *On trucks equipped with air compressor, vent air compressor drain cock. Remove compressor. Remove clip retaining air line to front end of right hand cylinder bank, loosen fitting at reservoir end of line and lay the line back against engine side compartment.*
15. Remove temperature sending unit wire and generator wires.
16. Remove oil level dipstick.
17. Remove engine front support nuts and washers.

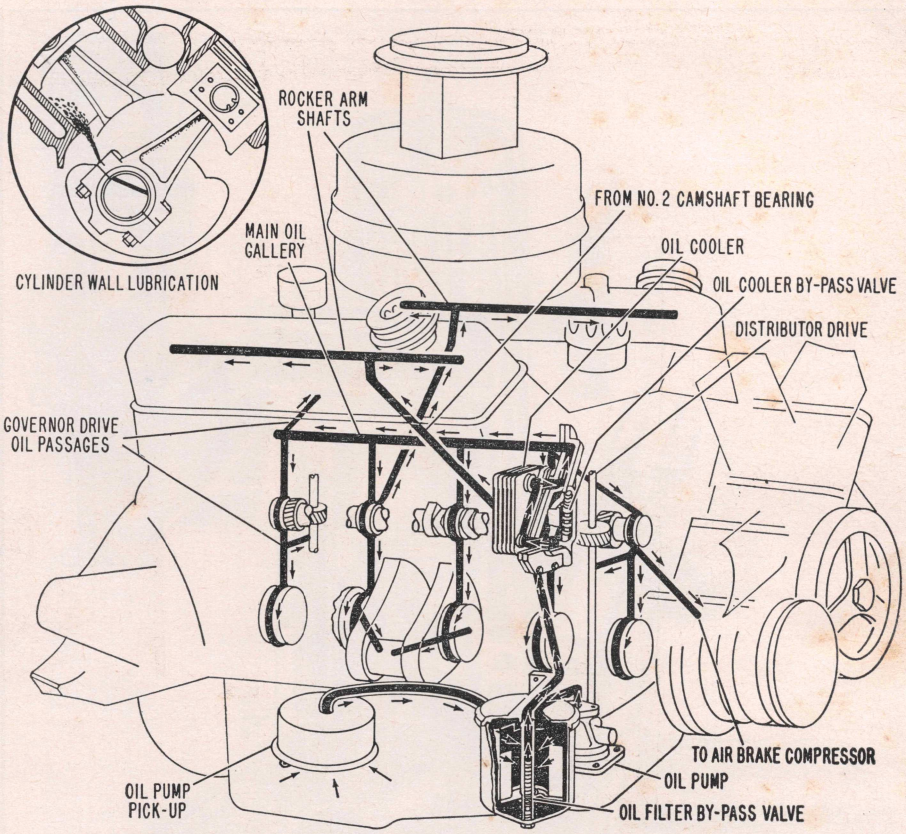

Engine lubrication. V8-401, 477, 534 engines

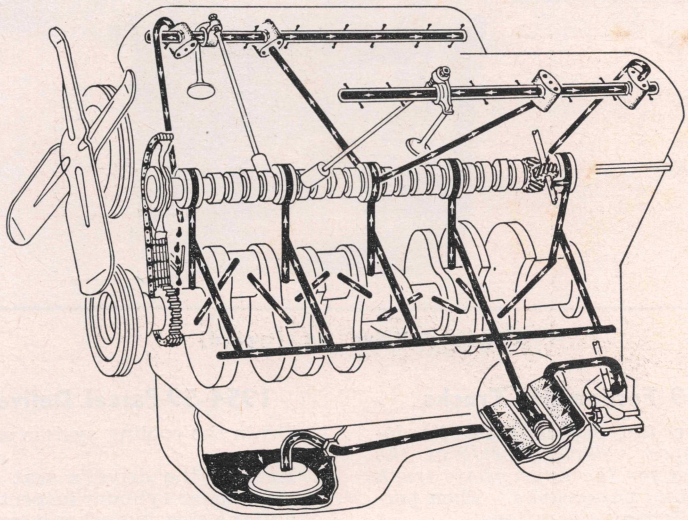

Engine lubrication. V8-239, 256, 272, 292 engines

18. Disconnect flexible line at fuel pump.
19. Close off main fuel line to prevent loss of fuel.
20. Disconnect muffler inlet pipe.
21. Remove flywheel housing lower cover.
22. Unfasten flywheel housing from engine.
23. Disconnect starter cable and remove starter.
24. Install engine lifting sling. Place wood block between jack and oil pan.
25. Raise engine slightly and remove front support bolts and rubber pad.
26. Raise engine and lift it out of chassis.
27. Reverse the foregoing procedure to install the engine.

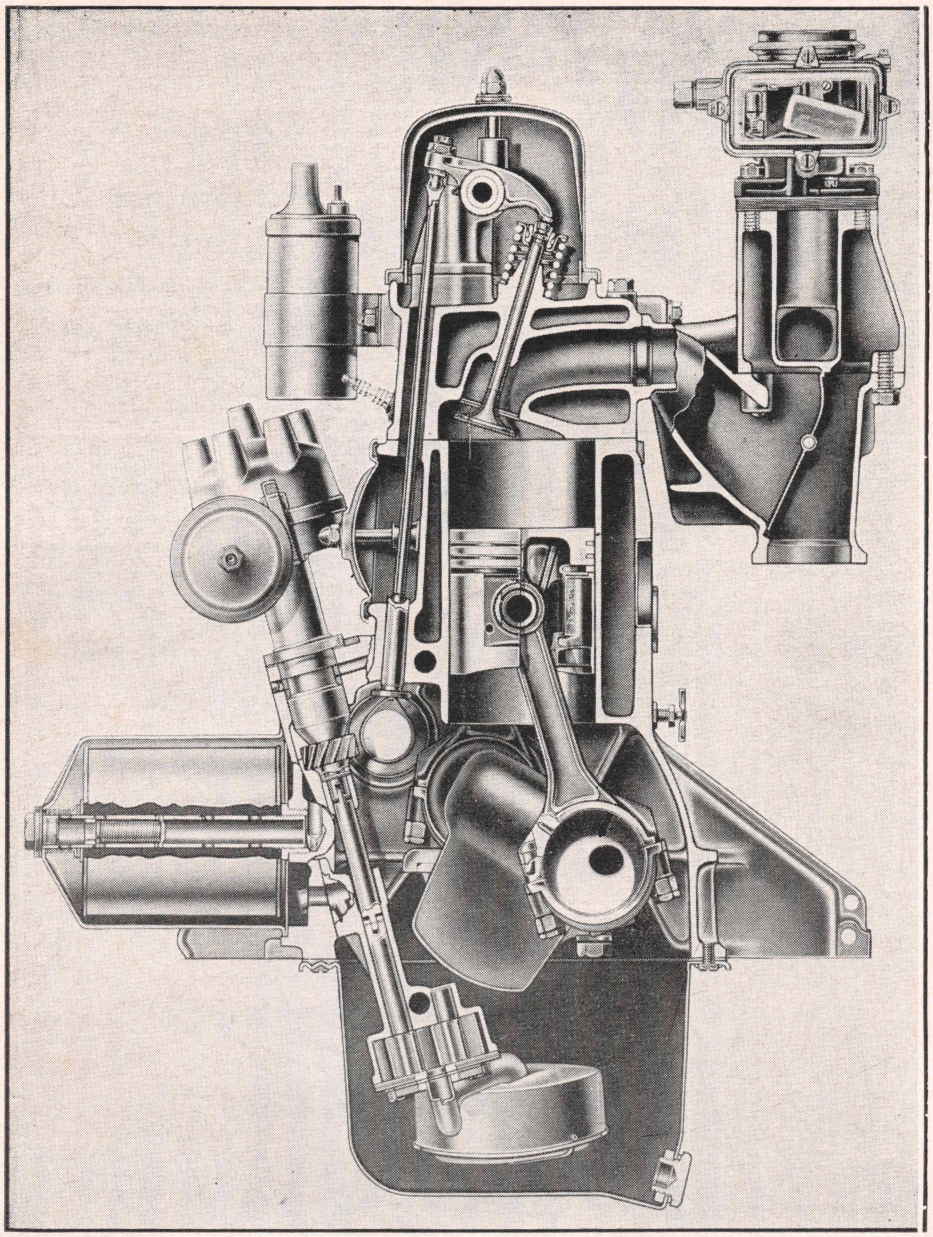

Overhead Valve Six (typical)

1953-59 Fordomatic Trucks

To remove the engine from Fordomatic equipped vehicles, perform the steps outlined for the appropriate truck in the preceding paragraphs. Then perform the following operations.

1. Disconnect transmission oil-to-water cooler inlet and outlet tubes.
2. Remove upper screws retaining converter housing to engine.
3. Remove converter housing-to-engine lower screws.
4. Remove converter housing lower access cover and turn the flywheel until the flywheel drive plate is in position so that the three bolts can be removed. Turn the flywheel 180° and remove the other three bolts.
5. Install engine lifting sling and remove engine in usual manner.

1954-59 Parcel Delivery

1. Drain the cooling system and crankcase.
2. Remove the driver's seat assembly, the master cylinder inspection cover, and the steering column cover plates.
3. Disconnect the accelerator pedal at the accelerator assembly, and the wires from the dimmer switch.
4. Remove the left wheel house panel and the center floor plate.
5. Remove the screws fastening the right side of the engine rear cover panel to the right wheel house panel.
6. Remove the bolts and nuts retaining the rear flange of the engine rear cover to the removable frame crossmember and the center floor plate front bracket. Wedge the right and left frame gussets open so the rear flange of the engine rear cover plate will clear the slots.
7. Remove the frame crossmember.
8. Remove the accelerator bracket assembly, accelerator return spring and the carburetor.
9. Disconnect exhaust manifold at the muffler inlet pipe and remove the inlet pipe to engine bracket bolt.
10. Disconnect generator wires at the generator.
11. Disconnect the flexible fuel line at the fuel tank.
12. Disconnect engine temperature and oil pressure sending unit wires at the sending units.
13. Disconnect the coil and resistor primary wires.
14. Disconnect the battery ground cable at the battery.
15. Remove the starter.
16. Remove the fan blade and bracket as an assembly and remove the radiator.
17. Remove the engine right and left front support to frame bracket bolts.
18. Remove the flywheel or converter housing cover.
19. Remove the flywheel housing or converter housing to engine block and engine rear plate retaining bolts.
20. Remove engine right and left rear support capscrews.
21. Remove the engine crankcase breather tube.
22. Support the engine with a jack.
23. On Fordomatic equipped vehicles, disconnect the oil cooler hoses at the engine.
24. Drain the transmission and remove the filler tube.
25. Install the drain plugs in the torque converter.
26. Remove the engine from the vehicle.
27. Reverse the foregoing procedure to install the engine.

1957-59 Tilt Cab (Except Super Duty Jobs)

1. Release cab lock and tilt cab forward.
2. Drain cooling system and the crankcase.
3. Remove clamps holding the throttle, choke, and accelerator cables, and the heater hoses to the radiator.
4. Remove the fan assembly and the drive belts and remove the radiator and shroud as an assembly.
5. Remove the air cleaner and disconnect the heater hoses from the engine.
6. On trucks equipped with air compressor, open the air reservoir drain cock and disconnect the air line at the front of the engine and place the line against the frame side rail.
7. Disconnect the fuel line.
8. Disconnect oil pressure and water temperature sending unit wires at the sending units.
9. Disconnect the throttle control, choke control, and the accelerator cables at the carburetor, and the vacuum brake hose (if equipped).
10. Remove the clutch release lever retracting spring and the crankcase ventilator tube extension.
11. Disconnect primary wires at the ignition coil and resistor, and disconnect the generator wires.

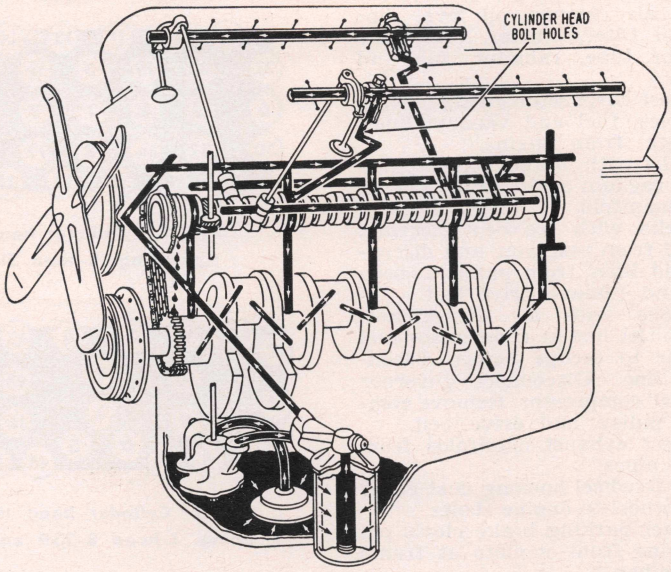

Engine lubrication. V8-332 engine

12. Remove the starter.
13. Disconnect the radiator supply tank hose at the tank.
14. Remove the oil filler pipe assembly clamp at the water supply tank bracket.
15. Remove the exhaust manifolds from the muffler inlet pipes.
16. Support the transmission and remove the flywheel housing inspection cover and the flywheel housing to engine retaining bolts.
17. Remove the engine front support insulator bolts.
18. Attach engine lifting hooks and sling.
19. Remove the engine and lower the engine on blocks and remove the right exhaust manifold.
20. Reverse the foregoing procedure to install the engine.

1958-59 Super Duty Conventional Trucks

1. Remove hood and cross braces.
2. Drain cooling system and crankcase.
3. Disconnect battery ground strap and all carburetor linkage, wires, and fuel lines from engine.
4. Remove fan, radiator and shroud.
5. On trucks with conventional brakes, disconnect vacuum assist brake line from intake manifold.
6. On power steering jobs, disconnect power steering oil lines.
7. On trucks with air compressor, loosen outlet line at air compressor and allow air to escape; then disconnect the line. Disconnect air compressor governor line at compressor.
8. Disconnect wiring harness at alternator.
9. Remove oil filter and crankcase ventilator tube.
10. Disconnect exhaust pipes at exhaust manifolds.
11. Place jack under front bumper at right side and raise truck.
12. Remove starter shield and starter; then lower truck and remove jack.
13. Unfasten engine mountings and lift engine from truck.
14. Reverse removal procedure to install engine.

1958-59 Super Duty Tilt Cab Trucks

1. Drain cooling system and crankcase.
2. Disconnect battery ground cable and remove air cleaner.
3. Remove oil level dipstick.
4. Disconnect radiator supply tube at front thermostat housing. Remove radiator supply tank bracket bolts. Disconnect cab latch anti-rattle springs; then remove bracket and tank.
5. Disconnect carburetor linkage, wires and fuel lines from engine.
6. Remove drive belts, oil filter, starter and shield, and crankcase ventilator tube.
7. Remove radiator and fan.
8. On conventional brake jobs, disconnect vacuum assist brake line at intake manifold.
9. On power steering jobs, disconnect pump lines.
10. On trucks with air compressor, loosen outlet line at compressor and allow air to escape; then disconnect line. Disconnect air compressor governor line at compressor. Remove compressor belt and pulley.
11. Disconnect exhaust pipes from manifolds.
12. Remove oil pan.
13. Support transmission with jack. Remove engine mounting bolts and lift engine from truck.
14. Reverse removal procedure to install engine.

1960-63 B & F Series With 6-Cyl. Engine

1. Remove hood, radiator and shroud, air cleaner, fan and pulley, starter, flywheel housing inspection cover or converter housing lower access cover.
2. Disconnect usual items such as carburetor linkage, wires and cables, fuel and vacuum lines, hoses, etc. from engine.
3. Remove upper right and lower left engine rear plate-to-flywheel housing retaining bolt.
4. Disconnect exhaust manifold from exhaust pipe.
5. If equipped with transmission oil cooler, disconnect cooler lines at engine.
6. Remove remaining flywheel housing retaining bolts.
7. Attach lifting rig to engine.
8. Remove engine front support bolts.
9. Lift engine out of chassis.

1960-63 P Series With 6-223 Engine

1. Remove driver's seat, master cylinder inspection cover and steering column cover plates.
2. Remove left wheel house panel and center floor plate.
3. Disconnect right side of engine rear cover panel from right wheel house panel.
4. Disconnect rear flange of rear engine cover from removable frame crossmember and center floor plate front bracket.
5. Remove air cleaner tube but leave air cleaner attached to engine cover.
6. Wedge right and left frame gussets so rear flange of engine rear cover plate will clear slots. Then remove cover plate.
7. Remove carburetor, starter, fan and bracket, radiator, engine front bolts, flywheel or converter housing cover, and crankcase ventilator tube.
8. Unfasten flywheel housing or converter housing-to-engine attaching bolts.
9. Disconnect usual items such as carburetor linkage, wires and cables, fuel and vacuum lines, hoses, etc. from engine.
10. Loosen engine rear support capscrews.
11. On automatic transmission jobs, disconnect oil cooler lines at engine. Remove filler tube and drain transmission. Raise rear of transmission with jack.
12. Attach engine lifting rig and swing rear of engine toward right about 30° and manually lift rear of engine to clear engine compartment. Then remove engine through right door.

1960-63 B, F & T Series With 292, 302, 332 Engines

1. Remove hood, air cleaner, radiator and shroud, fan, starter, flywheel housing inspection cover or converter housing front cover and lower cover.
2. Disconnect usual items such as carburetor linkage, wires and cables, fuel and vacuum lines, hoses, etc. from engine.
3. If equipped with air compressor,

open air reservoir drain cock and disconnect compressor lines.
4. Disconnect exhaust manifolds from exhaust pipes.
5. Remove engine front support bolts.
6. If equipped with power steering, disconnect hydraulic lines from bracket on frame and, after draining fluid from reservoir, disconnect fluid lines from pump.
7. Remove flywheel housing retaining bolts.
8. On automatic transmission jobs, disconnect converter from flywheel and remove converter housing-to-cylinder block retaining bolts. Remove transmission cover plate with accelerator assembly. Disconnect oil cooler lines.
9. Attach engine lifting rig.
10. Support transmission with jack and remove remaining flywheel or converter housing bolts.
11. Lift engine out of chassis.

1960-63 F & T Series With 401, 477, 534 Engines

1. Remove hood and cross braces, air cleaner, fan, radiator and shroud, oil filter, crankcase ventilator tube, starter, engine front support bolts and flywheel housing dust cover.
2. Disconnect carburetor linkage, wires and cables, fuel and vacuum lines, hoses, etc. from engine.
3. On trucks with brake booster, disconnect vacuum assist brake line at intake manifold.
4. On trucks with power steering, drain oil from reservoir and disconnect fluid lines from pump and from frame side rail.
5. On trucks with air compressor, loosen outlet line at compressor and allow air to escape before disconnecting line. Disconnect governor air line at compressor.
6. Disconnect exhaust manifolds from exhaust pipes.
7. Install lifting rig, position jack under transmission and remove flywheel-to-engine bolts. Then lift engine out of chassis.

1960-63 C Series With 292, 302, 332 Engines

1. Tilt cab forward.
2. Remove fan, belts, radiator and shroud, air cleaner and starter.
3. Disconnect carburetor linkage, wires and cables, fuel and vacuum lines, hoses, etc. from engine.
4. If equipped with air compressor, open air reservoir drain cock. Disconnect air lines at front of engine and place against frame side rail.
5. Unfasten exhaust manifolds from exhaust pipes.
6. Support transmission and remove flywheel housing cover and flywheel housing-to-engine attaching bolts.
7. Remove engine front support bolts.
8. Attach lifting rig and remove engine from chassis.

1960-63 C Series With 401, 477, 534 Engines

1. Tilt cab forward.
2. Remove air cleaner, oil level dipstick, oil filter, starter, crankcase ventilator tube, radiator, fan and oil pan.
3. Disconnect carburetor linkage, wires and cables, fuel and vacuum lines, hoses, etc. from engine.
4. On trucks with brake booster, disconnect vacuum assist brake line at intake manifold.
5. On trucks with power steering, drain oil from reservoir and disconnect fluid lines from pump. Loosen pump and remove drive belt.
6. On trucks with air compressor, loosen outlet line at compressor and allow air to escape before disconnecting line. Disconnect governor air line at compressor. Remove compressor pulley and drive belt.
7. Disconnect exhaust manifolds from exhaust pipes.
8. Remove flywheel housing dust cover and flywheel-to-engine bolts.
9. Disconnect parking brake clevis pin and engine front mounts at frame crossmember.
10. Attach lifting rig.
11. Raise engine approximately one inch and support transmission with jack.
12. Remove engine from chassis.

CYLINDER HEAD, REPLACE

1952-53 L-Head Six Conventional Trucks

1. Drain cooling system.
2. Remove air cleaner.
3. Disconnect upper radiator hose.
4. Disconnect temperature unit wire.
5. On 1952-53, remove screw from distributor vacuum line clamp on forward left corner of cylinder head.
6. Remove spark plugs.
7. Disconnect heater hose.
8. Remove screw from manifold air baffle on right-hand side of head.
9. Remove cylinder head.
10. Install the head in the reverse order of removal and tighten head bolts in the sequence shown in Fig. 1.

1952-53 L-Head Six Cab-Over-Engine Trucks

1. Drain cooling system.
2. Disconnect upper water hose.
3. Remove engine compartment cover.
4. Disconnect temperature sending unit wire.
5. Remove screw from manifold air baffle on right-hand side of cylinder head.
6. Remove spark plugs.
7. Disconnect heater hose.
8. Remove cylinder head.
9. Install cylinder head and tighten bolts in sequence shown in Fig. 1.

1952-53 8-239

1. On 1952 Cab-Over-Engine models, remove transmission cover plate, right-hand seat, floor mat and engine cover panel. On 1953 Cab Forward models, remove engine rear cover.
2. Drain cooling system.

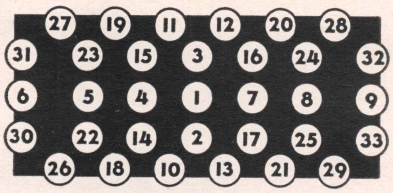

Fig. 1 Cylinder head tightening. L-head Six

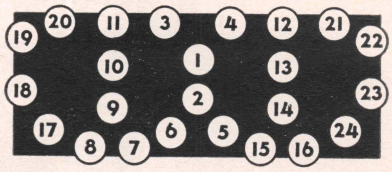

Fig. 2 Cylinder head tightening. L-head 8-239 engine

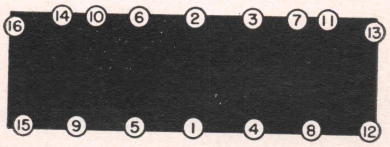

Fig. 3 Cylinder head tightening. Overhead Valve Six

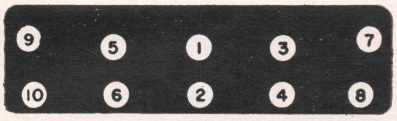

Fig. 4 Cylinder head tightening sequence. Overhead valve V8s

3. If left-hand cylinder head is to be removed, disconnect and fold back generator wires and ignition wires. Disconnect oil filter lines.
4. On 1952-53 models, when removing right-hand head, remove coil bracket mounting screws and allow coil to hang from distributor.
5. Disconnect heater hose.
6. Disconnect radiator hose.
7. Disconnect battery ground strap.
8. Remove spark plugs.
9. Remove one head bolt at each end and install guide studs in these holes.
10. Remove remaining bolts and lift off head.
11. Install heads in reverse order and tighten bolts in the sequence shown in Fig. 2.

1952-57 6-215 & 6-223 Removal

1. Drain cooling system and disconnect radiator and heater hose at cylinder head outlet elbow.
2. Disconnect windshield wiper vacuum line from manifold.
3. Remove air cleaner. (On Parcel Delivery models, remove air cleaner tube.)
4. Remove valve chamber cover.
5. Disconnect fuel line at fuel pump

and carburetor and distributor vacuum line at distributor and carburetor.
6. Remove spark plugs.
7. Disconnect coil from head and allow coil to hang from distributor.
8. Disconnect engine temperature sending unit wire.
9. Remove fan assembly.
10. Remove capscrew and clip from No. 6 rocker arm support bracket.
11. Pull oil feed line out of bracket and block.
12. Loosen all rocker arm adjusting screws to remove valve spring load from rocker arms.
13. Slide rocker arms away from push rods and remove rods. The rocker arms at each end of the 6-215 engine cannot be moved so they should be left in place.
14. Tag the push rods so they can be reinstalled in the same place from which they were removed.
15. Unfasten the manifold and pull it away from the head, allowing it to be supported by the muffler inlet pipe.
16. Remove all cylinder head bolts. Install guide studs, and lift the head assembly off the engine.
17. Install head in reverse order of removal and tighten bolts in the sequence shown in Fig. 3 to the torque given in the *Engine Tightening Chart.*

1954-55 8-239 & 8-256

1. To remove the cylinder heads, drain cooling system and disconnect upper radiator hose.
2. Disconnect ground cable from right-hand cylinder head.
3. Remove air cleaner and tape carburetor air horn closed.
4. Disconnect choke control cable at carburetor.
5. Disconnect windshield wiper vacuum line.
6. Disconnect accelerator linkage.
7. Disconnect vacuum line at distributor (and governor vacuum lines on 256 engines).
8. Disconnect wires from coil.
9. Disconnect fuel line at carburetor.
10. Disconnect vacuum line at intake manifold.
11. Remove exhaust crossover pipe.
12. Remove spark plugs.
13. Disconnect muffler inlet pipe from right-hand exhaust manifold and remove manifolds.
14. Disconnect water by-pass tube from water outlet.
15. Disconnect fuel and vacuum lines from fuel pump.
16. Remove intake manifold, carburetor and ignition coil as a unit.
17. Remove rocker arm cover.
18. Loosen rocker arm adjusting screws to relieve valve spring tension.
19. Remove rocker arm assembly and oil baffle plates.
20. Remove valve push rods, keeping them in their order of removal for proper reinstallation.
21. Disconnect wire from temperature sending unit.
22. Remove ignition harness bracket from right-hand head.
23. Remove generator bracket rear bolt.
24. Remove exhaust manifolds.
25. It is strongly recommended that the cylinder head holding fixture shown in Fig. 5 be used as it has been designed so all work operations may be performed with the fixture in place. *Thus, the machined surfaces are being protected from being scratched or marred which would require extensive repair work to prevent a gasket leak.*
26. Remove head bolts and lift off head and gasket.
27. Install heads in reverse order of removal and tighten bolts in the sequence shown in Fig. 4 to the torque given in the *Engine Tightening Chart.*

1952-57 V8-272, 279, 302, 317 & 332

Removal

1. Drain cooling system.
2. Remove rocker arm cover.
3. Remove exhaust manifolds, spark plugs and intake manifold.
4. Remove valve chamber cover.
5. Remove ignition harness bracket from rear corner of right head.
6. Remove oil level indicator tube from crankcase.
7. Disconnect temperature sending unit wire from left head.
8. Remove air compressor (if so equipped).
9. Release spring tension on rocker arms by loosening adjusting screws, then remove rocker arm assembly and oil baffle plates.
10. On ECR-272, 302 and 332 engines, remove exhaust valve caps, being sure to identify them for proper installation.
11. Remove and identify valve push rods so they can be replaced in their original positions.
12. Remove cylinder head bolts.
13. Install suitable holding fixture, Fig. 5, and lift head off block.
14. Install heads in reverse order of removal and tighten bolts in the sequence shown in Fig. 4 to the torque given in the *Engine Tightening Chart.*

1958-59 Six-Cyl.

1. Remove air cleaner and tape carburetor air horn closed.
2. Disconnect hoses, wires, carburetor linkage, fuel and vacuum lines as necessary for removal of cylinder head.
3. Remove coil, distributor cap and spark plugs.
4. Remove rocker arm cover.
5. Remove capscrew and bracket from No. 6 valve rocker arm support. Pull oil inlet line out of support and out of engine.
6. Remove capscrews from No. 1 valve rocker arm support and remove oil outlet line and bracket.
7. Loosen all rocker arm adjusting screws to relieve valve spring tension from rocker arms; then remove rocker arm shaft assembly.
8. Remove all push rods.
9. Unfasten and pull manifold away from cylinder head.
10. Unfasten and lift off cylinder head.
11. Install head in reverse order of removal and tighten bolts in the sequence shown in Fig. 3 to the torque given in the *Engine Tightening Chart.*

1958-59 V8-272, 292, 302, 332

1. Drain cooling system and remove air cleaner.
2. Remove rocker arm covers.
3. Remove exhaust manifolds and spark plugs.
4. Remove intake manifold and carburetor as a unit.
5. Remove push rod cover.
6. Remove air compressor (if used).
7. On right cylinder head, remove ignition harness bracket.
8. On 272 and 292 engines, remove generator bracket rear bolt.
9. Release spring tension on valve rocker arms by loosening adjusting screws; then remove rocker arm shafts.
10. On 302 and 332 engines, remove oil baffle plates and exhaust valve caps. Identify caps for proper installation.
11. Remove and identify push rods for proper installation.
12. Unfasten and remove cylinder heads.
13. Install heads in reverse order of removal and tighten bolts in the sequence shown in Fig. 4 to the torque given in the *Engine Tightening Chart.*

Service Note

On 302 and 332 engines, be sure valve rocker arm shaft supports are installed so that the large O.D. end of the center hole in the support is to the top. There is a difference in height when the supports are installed upside down.

1958-59 V8-401, 477, 534

1. Drain cooling system.
2. Remove air cleaner, intake manifold and rocker arm covers.
3. Disconnect exhaust pipes at manifolds.
4. Release tension of valve springs by loosening adjusting screws; then remove rocker arm shafts and oil baffle plate. *Because five cylinder head bolts also serve as pedestals for the rocker arm shafts, each time the rocker shafts are removed the cylinder head gasket must be replaced.*
5. Remove push rods and identify for proper installation.
6. Unfasten and remove cylinder heads.
7. Install heads in reverse order of removal and tighten bolts in the sequence shown in Fig. 4 to the torque given in the *Engine Tightening Chart.*

1960-63 Six Cyl.

1. Remove air cleaner and tape carburetor air horn closed.
2. Disconnect hoses, wires, carburetor linkage, fuel and vacuum lines as necessary for removal of cylinder head.

3. Remove coil and spark plugs.
4. Remove distributor cap and high tension wires as a unit.
5. Remove rocker arm shaft assembly.
6. Remove push rods, keeping them in proper sequence so they may be returned to original locations.
7. Unfasten and pull manifold away from engine.
8. Unfasten and remove cylinder head.
9. Install head in reverse order of removal and tighten bolts in the sequence shown in Fig. 3 to the torque given in the *Engine Tightening Chart.*

1960-63 V8-292, 302, 332 Engines

1. Remove intake manifold and carburetor as a unit.
2. Remove rocker arm covers.
3. Remove exhaust manifolds and spark plugs.
4. Remove air compressor (if so equipped).
5. On right head, remove ignition harness bracket, and generator bracket rear bolt.
6. On left head of 292 engine, disconnect temperature sending unit wire at unit.
7. Disconnect engine ground strap.
8. Release spring tension on valve rocker arms by loosening adjusting screws; then remove rocker arm shaft assembly.
9. On Heavy-Duty engines, remove and identify exhaust valve caps for proper installation.
10. Remove and tag push rods so they may be installed in original location.
11. Unfasten and remove cylinder head.
12. Install heads in reverse order of removal and tighten bolts in the sequence shown in Fig. 4 to the torque given in the *Engine Tightening Chart.*

1960-63 V8-401, 477, 534 Engines

1. Remove intake manifold.
2. Remove push rod cover and rocker arm covers.
3. Disconnect muffler inlet pipes at exhaust manifolds.
4. Release spring tension on rocker arms by loosening adjusting screws.
5. Remove rocker arm shaft and oil baffle plate. *Because five cylinder head bolts also serve as pedestals for the rocker arm shaft, each time the rocker arm assembly is removed, a new cylinder head gasket must be installed.*
6. Remove push rods, keeping them in proper sequence so they may be installed in original location.
7. Remove remaining cylinder head bolts and lift off head.
8. Install heads in the reverse order of removal and tighten bolts in the sequence shown in Fig. 4 to the torque given in the *Engine Tightening Chart.*

VALVE ARRANGEMENT

Front to Rear

All 6 Cylinder	E-I-I-E-I-E-E-I-E-I-I-E
V8-239, 256, 272	E-I-I-E-E-I-I-E
V8-279, 292, 302	E-I-I-E-E-I-I-E
V8-317, 332	E-I-I-E-E-I-I-E
V8-401, 477, 534	E-I-E-I-I-E-I-E

VALVES, ADJUST

Overhead Valve Engines

Prior to 1957, rocker arm adjusting screws are provided with a lock nut. Starting with 1957 engines self-locking adjusting screws are used.

If the cylinder head or rocker arm assemblies have been removed and installed, a preliminary (cold) valve lash adjustment should be made before starting the engine. If the adjustment is made in connection with an engine tune-up, the valve lash adjustment should be made with the engine at operating temperature.

To make the "hot" adjustment, operate the engine for a minimum of 30 minutes at a fast idle to stabilize engine temperatures. With the engine idling, check the valve lash with the proper feeler gauge between valve stem and rocker arm. Adjust the lash by means of the adjusting screw to the clearance given in the *Valve Specifications* table.

To make the "cold" adjustment, first turn over the engine to bring No. 1 piston up on its compression stroke, which will be indicated by the TDC mark on the vibration damper. Then proceed as follows:

1952-63 Six Cylinder

Make two chalk marks on the vibration damper. Space the marks approximately 120 degrees apart ⅓ of circumference) so that with the timing mark the damper is divided into three equal parts. Adjust the valves for No. 1 cylinder. Repeat this procedure for the remaining set of valves, turning the crankshaft ⅓ turn at a time in the direction of normal rotation, while adjusting the valves in the firing order sequence, which is 153624.

1952-63 V8

Make three chalk marks on the vibration damper. Space the marks 90 degrees apart (¼ of circumference) so that with the timing mark the damper is divided into four equal parts. Rotate the crankshaft until No. 1 piston is near TDC at the end of the compression stroke and adjust the following valves:

No. 1 intake and exhaust
No. 2 intake
No. 4 exhaust
No. 5 exhaust
No. 7 intake

Rotate the crankshaft 180 degrees (½ turn) which puts No. 4 piston on TDC. Then adjust the following valves:

No. 4 intake
No. 5 intake
No. 6 exhaust
No. 8 exhaust

Rotate the crankshaft 270 degrees (¾ turn), which puts No. 3 piston on TDC.

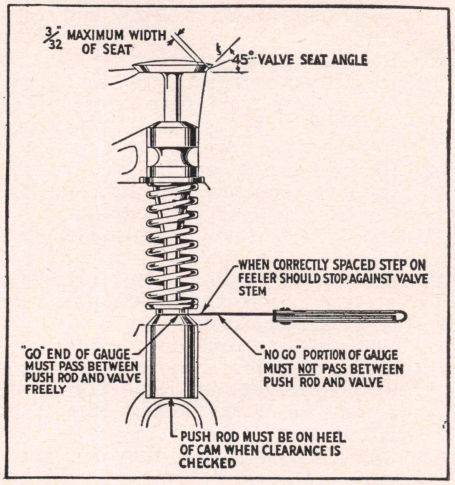

Fig. 5 Valve adjustment. 1952-53 L-Head V8s

Then adjust the following valves:

No. 2 exhaust
No. 3 intake and exhaust
No. 6 intake
No. 7 exhaust
No. 8 intake

1952-53 V8 Engines L-Head

Since there are no means of adjusting valves when these engines are assembled, this operation must be performed after the valves have been refaced and before assembling the valve guides and springs.

To check the valve clearance, turn over the engine until the valve being checked is fully closed. Slip a feeler gauge between the valve stem and the valve lifter, Fig. 5. If the clearance is not according to that given in the *Valve Specifications* table, remove the valve and grind the end of the valve stem, being sure that the valve stem is ground perfectly square.

VALVES, REMOVE

Overhead Valves V8

With the cylinder head removed as outlined previously, use a suitable valve spring compressor, Fig. 6, to compress each spring. Remove the valve locks and sleeve, tapping the sleeve with a soft hammer if necessary. Remove the neoprene sleeve from the valve stem and release the pressure on the spring. Remove the spring compressor and lift off the valve retainer sleeve, retainer, spring and valve. Repeat for the remaining valves. Keep the valves and related parts together so they may be installed in their respective positions if found in satisfactory condition.

Six Cylinder

After taking off the head as outlined previously, proceed as follows:

1. Remove capscrews retaining rocker shaft brackets to head and remove shaft assembly.
2. Clean carbon out of combustion chambers before removing valves.
3. Compress valve springs with a suitable spring compressor, remove valve stem locks and release the springs. Remove sleeve, valve spring cap re-

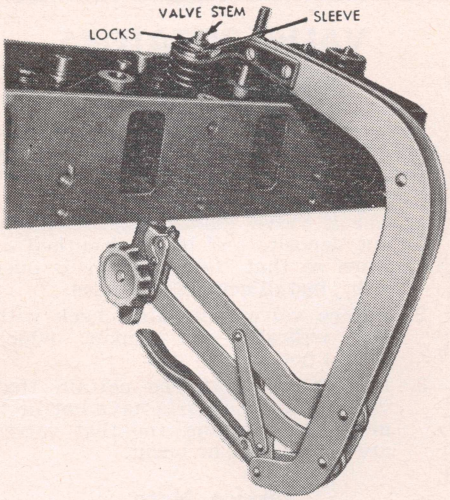

Fig. 6 Use of valve spring compressor to remove and install valves

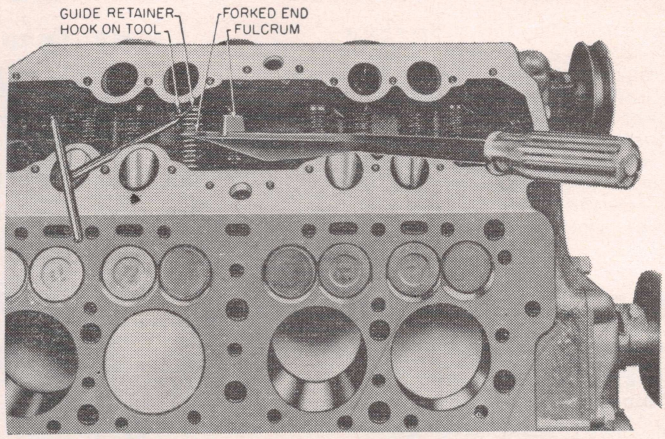

Fig. 8 Removing valve guide retainer. 1952-53 V8 L-Head

tainer, spring and valve. Discard intake valve seals.

4. Place valves in a board with numbered holes so they can be replaced in their original positions upon reassembly.

1952-53 V8 L-Head

The valve, guide, spring and retainer are assembled and installed in the engine as one unit, Fig. 7.

To remove the assembly, insert a bar type valve lifter through the valve spring and to the flange on the lower end of the valve guide, Fig. 8. Using the top of the valve chamber as a fulcrum, pull down on the valve guide and withdraw the guide retainer. Then with the valve lifter tool, push the assembly up and remove it from above.

When replacing valve and guide assemblies in the block, be sure to have the joint in the valve guide at *right angles* to the camshaft.

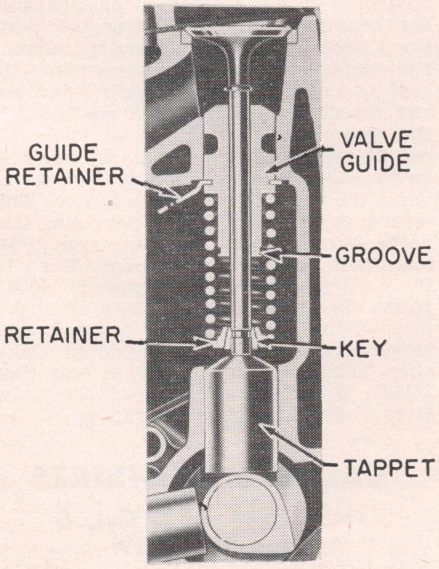

Fig. 7 L-Head valve. 1952-53 V8

VALVES, GRIND

All Models

Clean the valves with a wire wheel brush, making sure that all carbon is removed from the top and bottom of the heads as well as the gum which might have accumulated on the stems.

In refacing valves, take off only the minimum of metal required to clean up the valve faces. If the outer edge of the valve becomes too thin or sharp due to excessive grinding, the valve must be replaced. In other words, the valve head margin must be at least $\frac{1}{32}$", otherwise the valve must be replaced, Fig. 9.

Inspect the valve seats in the head for cracks, burns, pits, ridges or improper angle. During any general engine overhaul, it is advisable to reface the valve seats regardless of their condition.

VALVE GUIDES

Overhead Valve Engines

Valve guides in these engines are an integral part of the head and, therefore, cannot be removed. For service, guides can be reamed oversize to accommodate one of three service valves with oversize stems (.003", .015" and .030").

Check the valve stem clearance of each valve (after cleaning) in its respective valve guide. If the clearance exceeds the service limits of .004" on the intake or .005" on the exhaust, ream the valve guides to accommodate the next oversize diameter valve.

Intake Valve Stem Diameters (Std.)

1952-56 Six and V8	.3415-.3425"
1957-63 6-223	.3416-.3423"
1961-63 6-262	.3710-.3720"
1957-63 V8-272, 292	.3416-.3423"
1956-63 V8-302, 332	.3711-.3718"
1958-63 V8-401, 477, 534	.4349-.4358"

Exhaust Valve Stem Diameters (Std.)

1952-56 Six	.3405-.3415"
1954-55 V8	.3405-.3415"
1956 V8-272①	.3405-.3415"
1956 V8-272②	.4340-.4345"
1956-59 V8-302, 332	.4343-.4350"
1957-59 Six	.3403-.3410"
1957-59 V8-272①, 292	.3403-.3410"
1958-59 V8-401, 477, 534	.4343-.4350"
1960-63 6-223	.3398-.3405"
1961-63 6-262	.3693-.3703"
1960-63 V8-292	.3398-.3405"
1960-63 V8-302, 332	.4335-.4334"
1960-63 V8-401, 477, 534	.4335-.4344"

① ECW and ECY engines.
② ECR engines.

1952-53 V8 L-Head

See *Valves, Remove* inasmuch as the valve, guide, spring and retainer are assembled and installed in the engine as one unit.

VALVE SPRING INSTALLED HEIGHT

When valves and seats are reground the position of the valve in the head is changed so as to lessen the valve spring tension. Without proper valve spring tension the valve does not seat long enough or it may not seat completely. Since the valve is cooled by transferring heat from the valve head to the seat and thence to the coolant, improper valve spring tension will cause worn, pitted and distorted valves which result in loss of compression and power as well as poor gasoline mileage.

When valves, springs, retainers and locks are installed, measure the assembled height of the valve springs from the surface of the cylinder head spring pad to the underside of the spring retainer as shown in Fig. 10. If the assembled height is greater than the

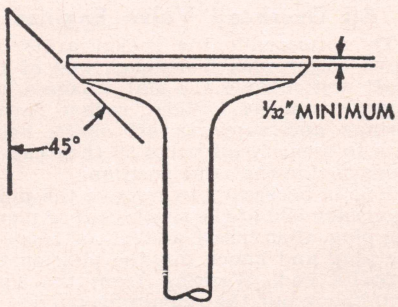

Fig. 9 Reface valve requirements

dimension given in the *Valve Specifications Chart,* install a spacer or shim of proper thickness between cylinder head spring pad and spring to bring the assembled height to specifications.

Do not install spacers unless necessary. Excessive use of spacers will result in overstressing valve springs and overloading camshaft lobes which could lead to spring breakage and worn camshaft lobes.

GRINDING VALVE STEMS

For Proper Lifter Clearance

If a valve grind job is needed, and if shims are found under the valve springs, very likely the valves, if reground, would not leave sufficient margin on the valve head for satisfactory operation. Since the maximum thickness of shimming that can be used satisfactorily is $\frac{1}{16}''$, and since the acceptable valve head margin is approximately $\frac{1}{16}''$ to $\frac{3}{32}''$, one can readily see that there would be insufficient margin left on the valve head if it was reground. Therefore, it is recommended that new valves be installed.

After grinding the valves, if shims are required to restore the correct valve spring installed height, *the valve stem should be ground off the same amount as the thickness of shims required. This will automatically provide the proper static clearance between the hydraulic lifter and the push rod.*

VALVE SPRING TESTING

After taking out the valve springs, wash them with gasoline or other suitable solvent. Examine the springs for damage or corrosion due to acid etching, which will develop into surface cracks and cause spring failure.

Check the valve spring tension on a spring testing fixture, if one is available, Fig. 11, and according to the specifications given in the *Valve Data Chart.* If a fixture is not available, at least check the free length of each spring by standing it alongside a new spring. Any spring that does not conform to the pressure specifications within 10% should be replaced. Likewise, any spring that stands shorter than the new spring used for comparison should be discarded. Of course, cocked springs should also be scrapped.

ROCKER ARMS

All Overhead Valve Engines

To disassemble the rocker arms, remove cotter pins from each end of the shaft and remove the flat washers and spring washers. Slide rocker arms, springs and supports off shaft, being sure to identify all parts so they can be assembled in the same position.

If it is necessary to remove the plugs from each end of the shaft, drill or pierce one plug, then insert a steel rod through the plug and knock out the plug on the opposite end. Working from the open end, knock out the remaining plug.

Assemble the rocker arms and related parts as indicated by Figs. 12 to 16.

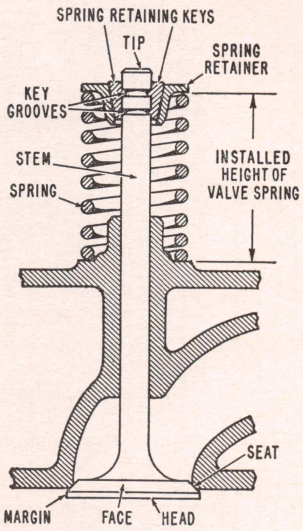

Fig. 10 Checking valve spring installed height

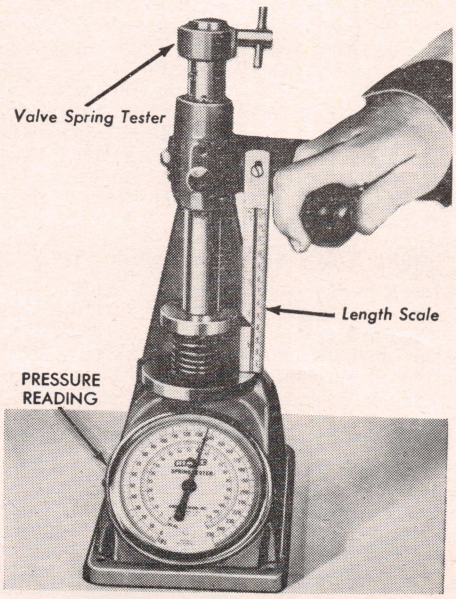

Fig. 11 Checking valve spring pressure

VALVE ROTATORS

Overhead Valve V8s

The successful operation of the free type valve assembly depends entirely upon proper installation. The procedure is as follows:

1. Check valve guides after cleaning out deposits and if bell-mouthed or worn so that the clearance is over .020", install new valve guides.
2. Reface valve seats and check with dial indicator for runout—which should not exceed .002".
3. Inspect valves to be certain that valve seats and parts have not been nicked in handling and that valves are not warped or burnt.

Service Note

If free valves are used with hydraulic lifters, bleed oil out of hydraulic units by inserting a brass wire through the tube to open the check valve and then press down on the plunger until it bottoms. Install valve and lifter and check clearance—which should be .040"-.090".

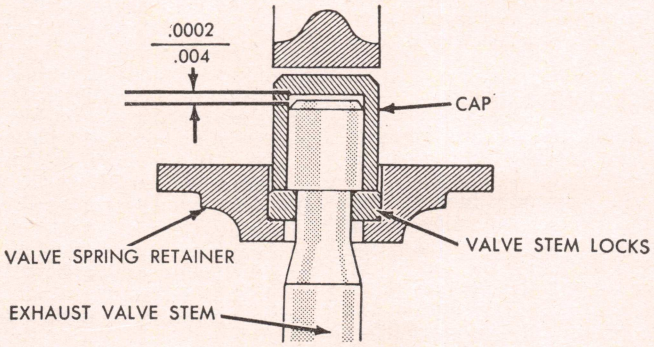

Fig. 17 Details of exhaust valve rotator. Overhead valve V8 engines

Check clearance between end of valve stem and inside of cap. This clearance can readily be checked after the parts are assembled in the engine by turning the engine over until the valve is off the seat and can be rotated freely by thumb and forefinger in the lifted position. In this free position the actual clearance can be measured by locating an indicator on the valve head and noting the reading when the valve is moved vertically. This clearance can be .0002" providing the valve turns freely but not over .004" maximum vertical movement, Fig. 17. If vertical movement exceeds .004", polish the open end of the cap against a piece of fine emery cloth to bring vertical movement of valve to specified clearance. If vertical movement is less than .0002", grind off the end of the valve stem to provide above clearance.

VALVE SEAT INSERTS

(Not Used on 6 Cyl. & 1954-55 8-239)

The tool shown in Fig. 18 is used to remove these inserts. If necessary to

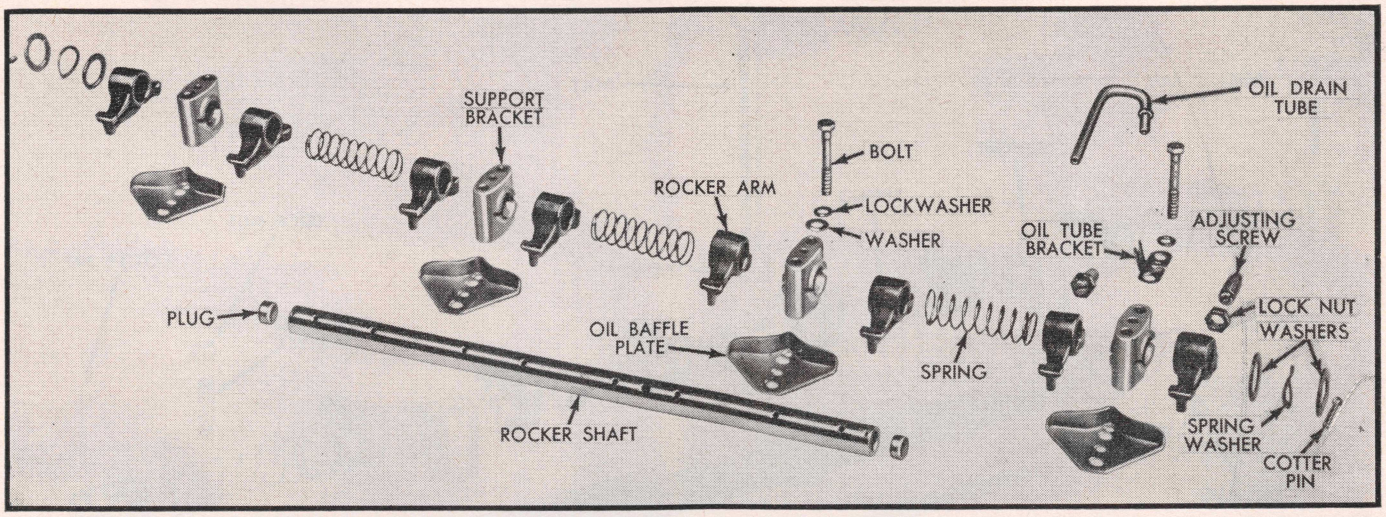

Fig. 12 Layout of rocker arm parts. 1954-55 8-239 and 8-256 engines

remove an insert when the puller is not available, use a drill which is smaller in diameter than the width of the insert and drill two holes at opposite sides, but not all the way through. Then cut through the undrilled portion with a sharp chisel and remove the two pieces.

To install an insert, chill it in "dry ice" for at least 30 minutes to allow the metal to contract. Then press the insert into its counterbore in the cylinder block, using extreme care to see that it goes in straight.

When necessary to reface inserts, a high speed grinding stone or lapping tool must be used as they cannot be ground by the conventional hand grinding method.

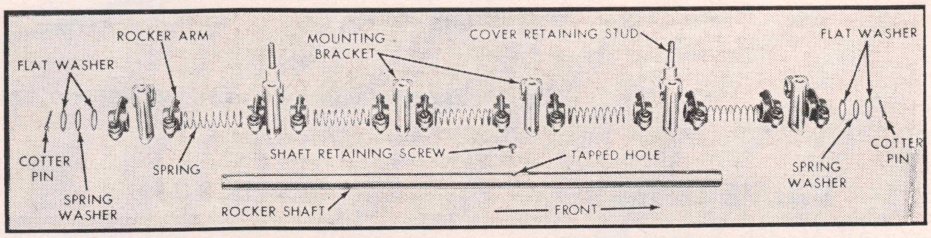

Fig. 13 Layout of rocker arm parts. Overhead Valve 6-223

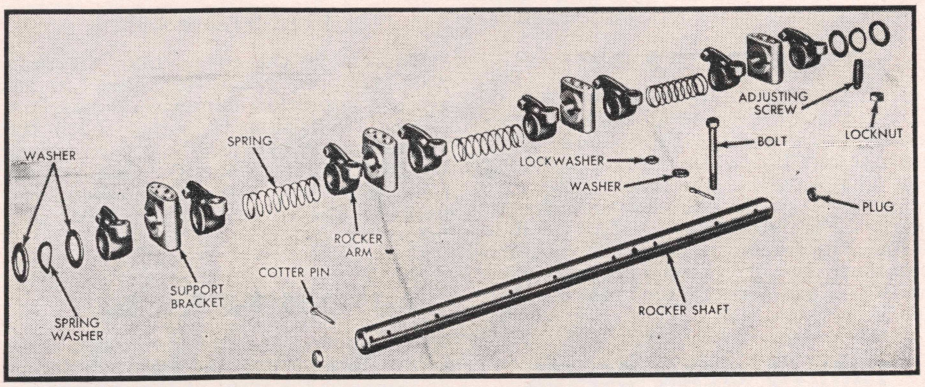

Fig. 14 Layout of rocker arm parts. 1952-55 8-279 and 8-317 engines

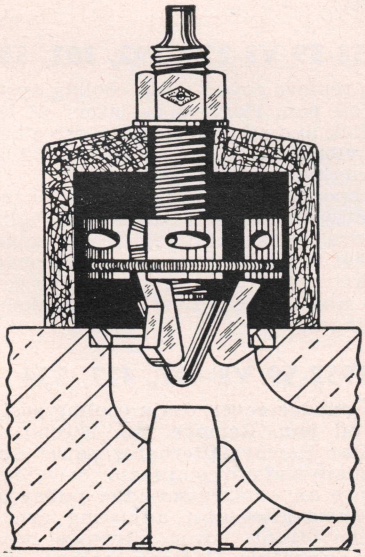

Fig. 18 Valve seat insert puller

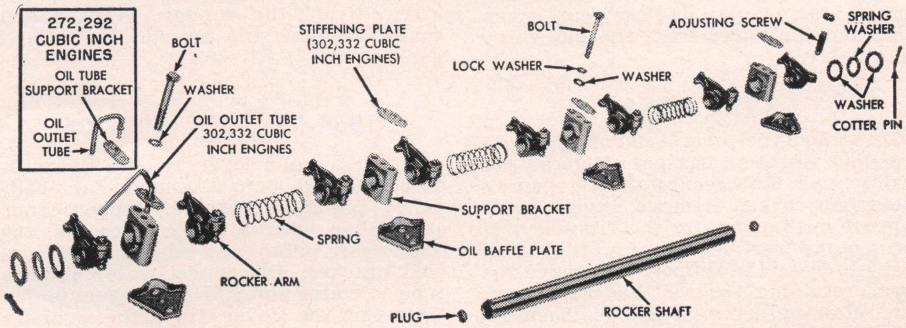

Fig. 15 Layout of rocker arm parts. V8-272, 292, 302, 332

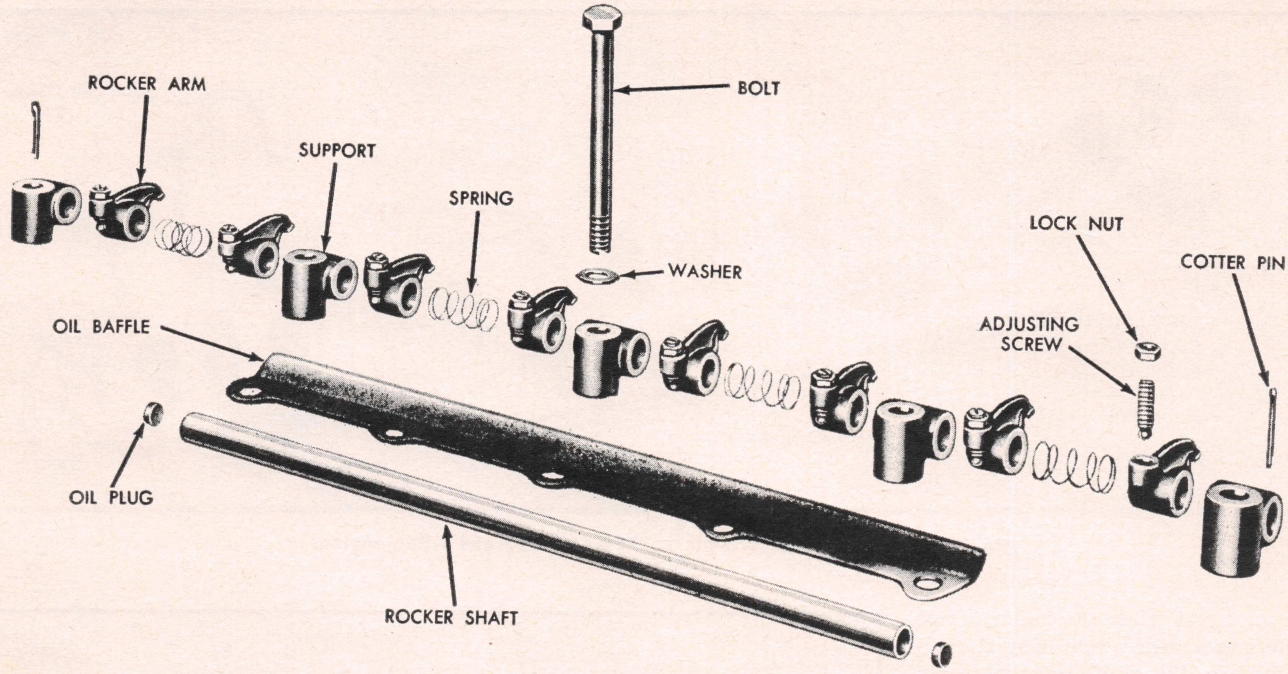

Fig. 16 Layout of rocker arm parts. V8-401, 477, 534 engines

VALVE LIFTERS

All Models Except Below

Valve lifters are of the barrel type and can be lifted out of the engine after removing push rods on overhead valve engines or the valves on L-head engines.

1954-55 8-239 & 8-256,

Valve lifters in these engines are of the mushroom type which makes it necessary to remove the camshaft in order to take out the lifters. After dropping the oil pan, fasten the lifters with wire or spring-type clothes pins so they will not interfere with the camshaft as it is being withdrawn. After removing the camshaft, the lifters may be unfastened and taken out through the bottom of the block.

TIMING GEAR COVER

1952 6-254

To remove the cover, remove radiator, vibration damper and the two screws holding the oil pan to the gear cover. Unfasten the cover from the block and take it off.

1953 6-254

To remove the cover, take off the radiator and vibration damper. Remove the two screws that secure the oil pan to the front cover. Remove engine front support nuts and raise the front end of the engine far enough for the front cover to clear the supports. Remove the cover retaining screws. Loosen the oil pan retaining screws slightly. Then remove the front cover from the dowels by tapping along the edge with a soft-faced hammer.

1952-53 8-239

To remove the cover, take off the fan and distributor. Then unfasten the cover from the block and lift it off.

1952-57 Six Cyl.

To remove the cover, take off radiator, fan and generator belts, fan assembly, vibration damper, oil pan and engine front support bolts. Raise the engine far enough for the cover to clear the front support bolts. On 6-223 engine, remove the front support. On all engines, unfasten the cover from the block and lift it off.

1952-55 8-279 & 8-317

To remove the cover, drain crankcase and remove oil pan and vibration damper. Support the front of the engine on a jack. Remove engine front support bolts and raise the front of the engine enough so that the front support bracket clears the front mounting bolts. Remove the screws from the support bracket and cover. Remove the bracket, cover and gasket.

1954-55 8-239 & 8-256

To remove the cover, remove the radiator and oil pan. Remove fan belt, pulley, fan and generator. Support front of engine with a jack. Remove the crankshaft pulley and engine front support bracket. Disconnect water by-pass tube at water pump. Remove fuel pump. Unfasten the cover from the cylinder block, pull the cover forward until it clears the crankshaft, then remove the cover.

1956-57 8-272, 302, 332

1. Remove oil pan and radiator.
2. Remove drive belts, fan and vibration damper.
3. On 272 engine, remove fuel pump.
4. Support front of engine with a jack.
5. Remove engine front support nuts and raise engine so front support bracket clears front mount bolts.
6. Remove front support bracket, front cover and gasket.

1958-59 Six Cyl.

To remove the cover, drain the cooling system and oil pan. Remove radiator, vibration damper and oil pan. Remove cover screws and take off cover and gasket.

1958-59 V8-272, 292, 302, 332

To remove cover, drain cooling system and oil pan. Remove radiator, oil level dipstick and oil pan. Remove drive belts, fan, vibration damper, and on 272 and 292 engines, remove fuel pump.

Support front of engine, Remove front mounting bolts and raise engine slightly. Remove bolts retaining front support bracket to timing case cover and remove bracket. Then remove remaining cover bolts and lift off cover and crankshaft oil slinger.

1958-59 V8-401, 477, 534

To remove cover, drain cooling system and oil pan. Remove fan, shroud and radiator. Remove alternator, power steering pump and air compressor drive belts. Remove air compressor idler pulley and disconnect alternator adjusting arm at cylinder front cover. Remove water pump, vibration damper, engine front support bracket and oil level dipstick. Remove front cover and oil pan.

1961-63 6-262 Engine

1. Remove radiator, fan, spacer, drive belts and pulley.
2. Remove vibration damper, fuel pump and water pump.
3. Remove flywheel housing inspection cover and oil pan.
4. Remove timing gear cover.

1960-63 6-223 Engine

1. Drain cooling system and crankcase.
2. Remove radiator and vibration damper.
3. Remove water pump, oil level dipstick, crankcase ventilator tube, flywheel housing inspection cover and oil pan.
4. Unfasten and remove front cover.

1960-63 V8-292 Engine

1. Drain cooling system and crankcase.
2. On P-Series trucks, remove hood, grille, headlamps, parking lamps, wind deflector and hood lower weatherstrip as a unit.
3. Remove radiator, vibration damper and fuel pump.
4. Remove engine front support bolts and raise front of engine slightly.
5. Unfasten front support bracket from cylinder front cover and remove bracket.
6. Unfasten and remove front cover.

1960-63 V8-302, 332 Engines

1. Drain cooling system and crankcase.
2. Remove radiator and vibration damper.
3. Remove fuel pump (302 engine).
4. Support front of engine, remove support bolts and raise engine slightly.
5. Unfasten front support bracket from front cover and remove bracket.
6. Unfasten and remove front cover.

1960-63 V8-401, 477, 534

1. Drain cooling system and crankcase.
2. Remove fan, shroud, radiator, alternator, power steering pump and air compressor drive belts.
3. On F and T Series, lift front of engine about one inch with a floor jack to allow removal of damper.
4. Remove air compressor idler pulley and disconnect alternator adjusting arm at front cover.
5. Remove water pump, engine front support bracket and oil level dipstick.
6. Remove front cover.

TIMING GEARS

1952-53 L-Head Six

The bolt-on type camshaft gear, Fig. 19, is secured to the camshaft gear hub by four screws which are locked with retaining tabs. The mounting holes are spaced to make it impossible to install the gear incorrectly. The camshaft gear hub is aligned by a key and pressed on the shaft. The pressed on type gear is pressed on the camshaft and is located on the shaft by a key.

After removing the gear cover as outlined previously, follow the instructions given here that apply to the type of installation being worked on.

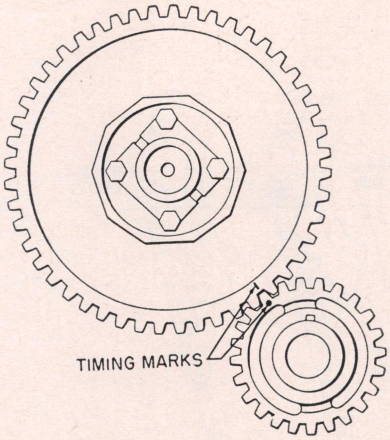

Fig. 19 Valve timing. 1952-53 L-Head Sixes

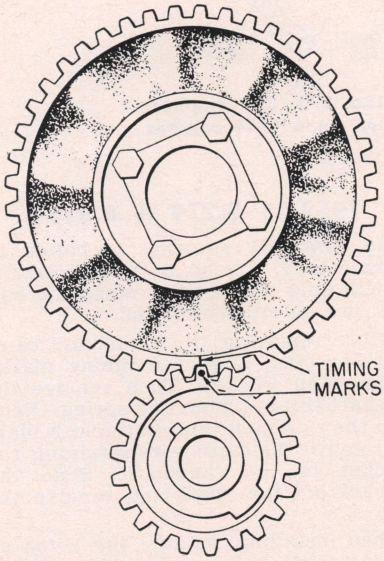

Fig. 20 Valve timing. 1952-53 L-Head V8s

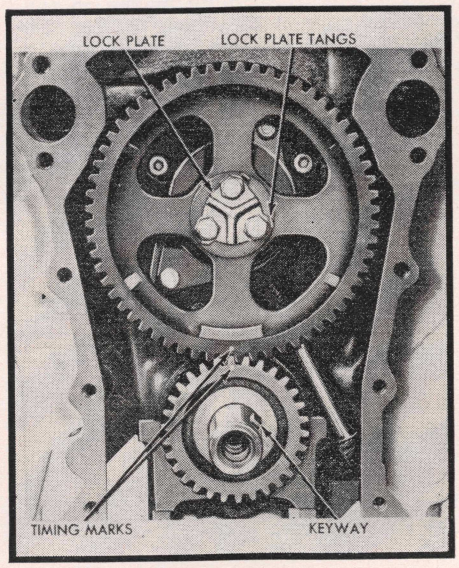

Fig. 21 Valve timing. 302 and 332 engines. Typical of 401, 477, 534 engines

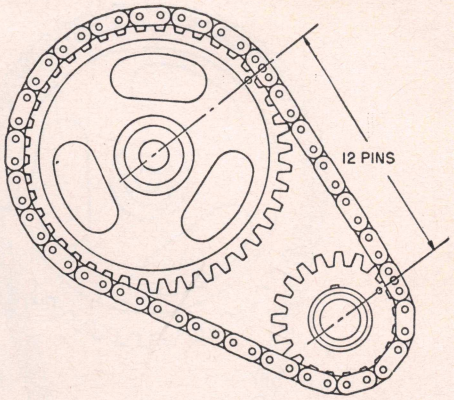

Fig. 22 Valve timing. 6-223 engine

If the gear is the bolt-on type, bend the lock ring tabs away from the capscrews. Remove the capscrews and lock plate. Remove the gear from the camshaft and use a suitable puller to remove the hub from the camshaft.

If the gear is pressed on, core holes are provided on either side of the hub to facilitate removal. Install a puller in these holes and pull off the gear.

When the timing gear is installed, be sure the timing marks are aligned as shown in Fig. 19. After installing the gear, check the backlash which should be between .002″ and .003″.

Oversize camshaft gears are available for service. Install the next oversize gear when excessive backlash exists between the crankshaft and camshaft gears.

1952-53 L-Head V8 Engines

The camshaft gear is secured to the camshaft by four screws which are kept from coming loose by a lock ring. The mounting holes are spaced to make it impossible to install the gear incorrectly.

After removing the gear cover as outlined previously, rotate the crankshaft until the timing marks line up, Fig. 20. Remove the retaining screws and remove the camshaft gear.

When the timing gear is installed, be sure the timing marks on the camshaft gear and crankshaft gear line up.

Check gear backlash which should be .002″ to .003″. Oversize gears are available for service replacement if backlash is excessive.

1961-63 6-262 Engine

Caution: When the timing gears are removed from the engine, do not rotate the camshaft or crankshaft as interference may occur between the crankshaft and cam lobes.

When installing timing gears, mesh the timing mark between two of the camshaft gear teeth with the timing mark on one of the crank gear teeth.

1956-63 V8-302 to 534

The camshaft gear is a slip-on fit and is retained on the end of the camshaft by a lock plate and three cap screws.

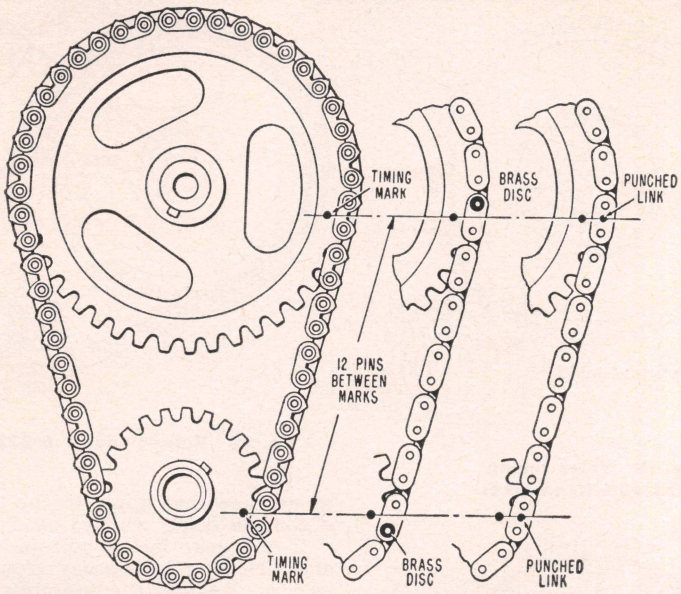

Fig. 23 Valve timing on V8-239, 256, 272, 292 engines. The punch link type chain was used on some 1954 engines

To remove, drain cooling system and crankcase. Remove oil pan, radiator, water pump and front cover. Crank engine until timing marks are aligned as shown in Fig. 21. Remove cap screws and lock plate and take off camshaft gear.

When installing the gear, be sure to have the timing marks lined up as shown.

TIMING CHAIN

1952-63 Overhead Valve Six

Before removing the camshaft sprocket, align the timing marks as shown in Fig. 22. Remove the camshaft sprocket retaining bolt and washer. Slide the camshaft sprocket, chain and crankshaft sprocket forward until the camshaft sprocket comes off the camshaft.

To install, place the chain over the crankshaft sprocket and insert the camshaft sprocket in the chain so the timing marks of both sprockets are positioned as shown in Fig. 22. Align the key in the camshaft with the camshaft sprocket keyway and slide the assembly into position. Recheck the timing. Install the washer and retaining bolt and tighten the bolt to 45-50 lb. ft. torque.

1954-63 8-239, 256, 292, 272

The camshaft sprocket is a slip-on fit and is keyed to the end of the camshaft. The camshaft sprocket, fuel pump eccentric counterweight, eccentric, spacing washer and lock washer are retained on the camshaft by a capscrew.

When installing, position camshaft sprocket and chain on the camshaft. Be sure the timing marks on both sprockets are properly aligned as shown in Fig. 23. Install the parts removed and tighten the retaining capscrew to 35-45 lb. ft. torque.

1952-55 8-279 & 8-317

The camshaft sprocket is bolted to the camshaft. It can be placed on the shaft in only one position since the bolt holes are unequally spaced.

Before removing the chain and camshaft sprocket, align the timing marks as shown in Fig. 24. Then remove the camshaft thrust piston and spring. Bend down the retaining tabs on the lock plate and remove the capscrews retaining the sprocket to the camshaft. Slide the sprocket off the shaft and remove the chain.

When installing, *be sure the notch on the camshaft hub is aligned with the timing mark on the crankshaft sprocket.* Place the camshaft sprocket in the chain and place the chain over the crankshaft sprocket with the timing marks on the sprockets aligned as shown in Fig. 24. When installed, tighten the capscrews to a torque of 15-18 lb. ft.

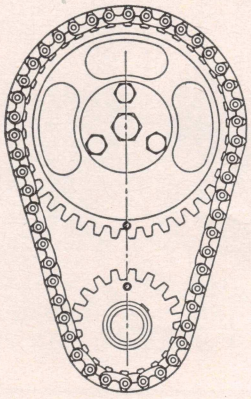

Fig. 24 Valve timing. 1952-55 8-279 and 8-317 engines

CAMSHAFT & BEARINGS

1952-63 Overhead Valve Engines

The camshaft is supported on five insert type bearings (4 on 6-cyl.) in the cylinder block. On 8-279 and 8-317 engines, camshaft end thrust is controlled by oil pressure against the end of the thrust piston in the forward end of the camshaft. The piston bears against a boss on the inside of the front cover.

On all other V8s, as well as 6-cylinder engines, camshaft end thrust is controlled by a thrust plate mounted on the cylinder block at the forward end of the camshaft.

To remove the camshaft, take off the front cover, cylinder heads and push rods as outlined previously. On engines with mushroom type valve lifters, raise the lifters and fasten them with wire or spring-type clothes pins so that they will not interfere with the camshaft as it is being withdrawn. Of course, if barrel type lifters are used, merely remove them from their bores after removing the push rods.

If it becomes necessary to replace the camshaft bearings as determined by a bearing leak detector test, the engine will have to be removed from the chassis and the bearings removed and installed with special equipment designed especially for the purpose.

1952-53 L-Head Engines

To remove the camshaft, take off the front cover, cylinder heads and remove the valves. Lift out the valve lifters, or if equipped with mushroom type lifters, tie them up with wire or spring-type clothes pins so they will not interfere with the camshaft as it is being withdrawn.

If it becomes necessary to replace camshaft bearings as determined by a bearing leak detector test, remove the engine from the chassis and remove and replace the bearings with the special equipment designed for the purpose.

PISTONS & RODS, REMOVE

After removing the cylinder heads and oil pan, use a ridge reamer to remove any ridge that may have formed on the cylinder wall at the top of the piston ring travel. Cutting the ridge before the piston is removed will avoid damaging rings or cracking ring lands of pistons during removal.

Remove the connecting rod cap and push the piston and rod out through the top of the bore. Use care to prevent the rod from nicking crankshaft journals. Identify the connecting rods (original rods are marked) when removing them so they may be installed in their original cylinder.

PISTON & ROD, ASSEMBLE

1952-63 Overhead Valve V8s

Lubricate all parts with light engine oil. Position the connecting rod in the

piston and push the pin into place, Figs. 25 and 26. Insert new piston pin retainers by spiralling them into the piston with the fingers. Do not use pliers.

1952-53 L-Head V8s

When pistons and rods are assembled, the numbered side of the rods must be towards the outside of the engine. In other words, left bank rod numbers must be towards the left side of the engine and right bank rod numbers toward the right side of the engine. If the installation is correct, the rod squirt holes will be on the front side of left bank rods and the rear side of right bank rods.

All 6 Cyl.

Piston heads are marked for location on the forward side. Rods and caps are numbered on the same side as the piston they serve.

PISTONS, REPLACE

If the pistons are to be re-used with new rings, remove the carbon from the ring grooves. A special tool is available for this work but a satisfactory job can be done by breaking an old piston ring. File the broken end to a sharp, square edge and use it to scrape out the carbon. Soak the piston in cleaning solvent to loosen any carbon residue. Clean out the loosened carbon, being careful not to cut away any piston material. Clean out the oil return holes with a drill just large enough to fill the holes. Hold the drill in a tap wrench and make sure the drill does not remove any metal from the piston.

Rinse the piston in solvent and wipe off the carbon on the sides of the piston. *Never use a wire brush to clean a piston as the brush will round off the edges of the ring lands.* Pistons showing scuffed or scored skirts should be discarded for new ones. Examine the ring lands carefully for cracks. If in the least bit doubtful, the piston should be scrapped.

PISTON RINGS, REPLACE

New rings should be assembled on the piston according to the instructions furnished by the ring manufacturer. Always use standard size rings in cylinder bores that are *standard at the bottom, regardless of the amount of cylinder wear.*

When new rings are installed without reboring cylinders the glazed cylinder walls should be slightly dulled, but without increasing the bore diameter. This is done with a "Glaze-buster" or with a hone equipped with the finest grade of stones.

New rings must be checked for clearance in piston grooves and for gap in cylinder bores. Cylinder bores and piston grooves must be clean, dry and free of carbon and burrs.

Check the clearance of each ring in its piston groove by installing the ring and then inserting feeler gauges *under* the ring. Any wear that occurs in the piston groove forms a step or ridge at the inner portion of the lower land. If gauges are inserted above the ring, the ring may rest on the step instead of on the worn portion of the lower land, and a false measurement of clearance will result.

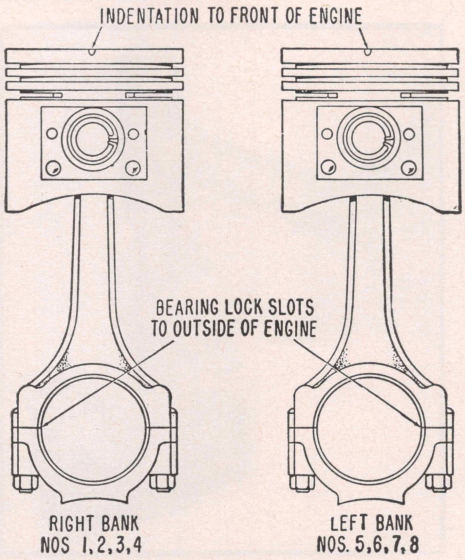

Fig. 25 Correct assembly of pistons and rods. 1954-63 V8 (except 401, 477, 534)

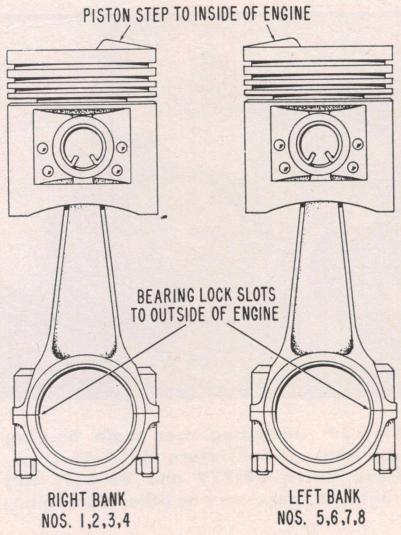

Fig. 26 Assembly of pistons and rods. 1958-63 V8-401, 477, 534

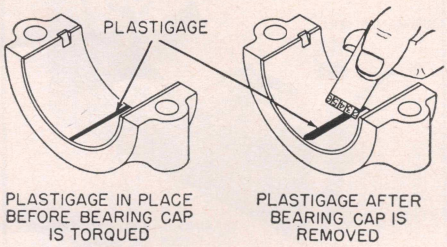

Fig. 27 Checking bearing clearance with Plastigage

If the piston grooves are worn to the extent that relatively high steps or ridges exist on the lower lands, the piston should be replaced because the steps will interfere with the operation of the new rings and the ring clearances will be excessive. Piston rings are not furnished in oversize widths to compensate for ring groove wear.

To check the end gap of rings, place the ring in the cylinder in which it will be used. Square it in the bore by tapping with the lower end of the piston. Then measure the gap with feeler gauges. If necessary to increase the gap, file the ends of the rings carefully with a smooth file.

PISTON PINS, REPLACE

It is recommended procedure to replace pistons pins whenever new rings are installed. Pins that have been relatively quiet when the old rings were in service may be noisy after new rings are installed.

Use a suitable reamer to ream the piston for oversize pins. The pins are retained by snap rings, one located at each end of the pin. When installing the retainers, make sure each one enters the groove in the piston pin boss.

ROD BEARINGS, REPLACE

These bearings are of the insert type, selectively fitted, and available for service replacement in standard and undersizes for use on crankshaft journals that have been reground.

If inspection reveals badly worn or scored bearings, they should be replaced. Bearings may be removed by simply taking off the bearing caps and slipping the old ones out and the new ones in. The installation of new bearings must be closely checked to maintain the proper clearance between the crankshaft and bearing surface. A convenient and accurate method for checking bearing clearance is with the use of Plastigage, which is available at any auto parts jobber.

Place the string-like plastic material so it extends the full width of the bearing, Fig. 27. Install the bearing and cap and tighten the nuts to the recommended torque. Then loosen the nuts and carefully remove the cap and bearing. The widest portion of the Plastigage is then measured with the scale on the Plastigage envelope. Fig. 27. The graduation on the envelope corresponding to the thickness of the Plastigage gives the bearing clearance in thousandths of an inch.

MAIN BEARINGS, REPLACE

Like the rod bearings, main bearings are of the insert type and are removed, replaced and checked for clearance with Plastigage in the same manner.

CRANKSHAFT END PLAY

End play of the crankshaft is controlled by flanges on the rear main bearing on all L-Head engines and by the flanges on the center main bearing on overhead valve engines. Through normal wear, end play will seldom become excessive but whenever new bearings are fitted, check the end play carefully by forcing the crankshaft forward as far as possible with a pry bar. Then, using a dial indicator or feeler gauge, force the crankshaft back and note the end play. If the end play is excessive, the bearing flanges may be dressed down if the clearance is insufficient. If end play is too great, install a new bearing.

CRANKSHAFT OIL SEAL, REPLACE

Overhead Valve V8s

The rear main bearing cap contains the lower half of the crankshaft journal oil seal and the cap itself is sealed to the block. It is recommended that the tool shown in Fig. 28 or its equivalent be used to form the seal in both the block and bearing cap.

With the crankshaft removed, take out the rear main bearing inserts and pry the seals from the cap and block. Clean the seal grooves thoroughly.

Install the new crankshaft oil seal in the bearing cap groove. Form the seal and cut it off flush with the face of the cap. Use a sharp knife or razor blade and leave no ragged edges.

Repeat the procedure to form the upper half of the seal in the cylinder block groove. Install the bearing inserts. Lay the crankshaft in the block bearing halves, using care not to damage the thrust bearing (No. 3).

Install the bearing cap with seals, using the special guide fixture shown in Fig. 29, if available. Install the cap guide studs in the block. Place the bearing cap and fixture on the pilot studs and slide the cap over the studs and through the guide. Press the bearing cap carefully into place. Coat the surfaces lightly with grease to reduce friction during installation. *Be sure the cap-to-block seals do not shift while the cap is being installed.* The seal must be seated all the way down to prevent oil leakage at the parting edge of the block and cap.

Install the bearing cap bolts and torque them properly. The vertical cap-to-block seals should extend approximately $\frac{5}{64}$" above the block to insure a good seal against the oil pan gasket.

1952-53 L-Head V8

Oil sealing is controlled by a two-piece metal retainer having a groove which returns excess oil to the crankcase. These retainers can be replaced without removing the crankshaft by taking off the rear main bearing cap. The upper half of the retainer can be pushed around and taken out through the bottom.

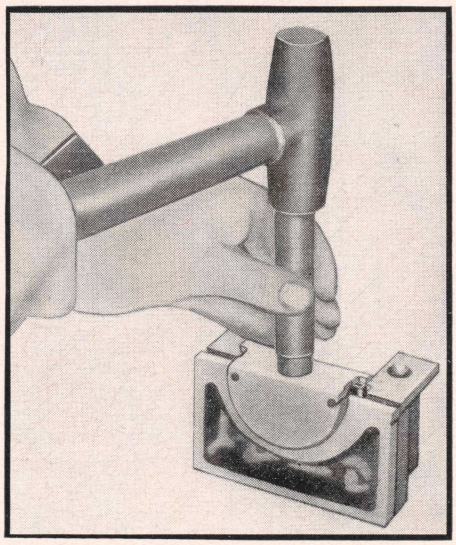

Fig. 28 Forming rear bearing oil seal in cap. Overhead Valve engines

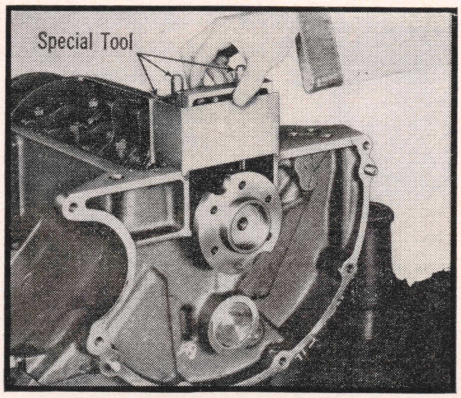

Fig. 29 Installing rear main bearing cap with special fixture. 1952-55 Overhead Valve V8-279 and V8-317. This tool is not necessary on other V8 engines

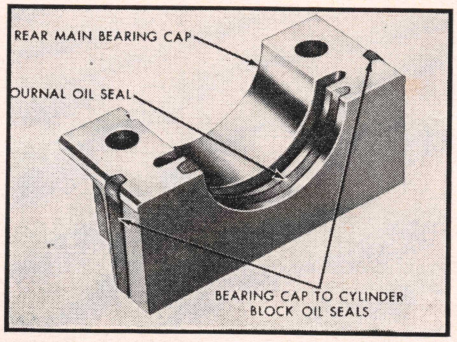

Fig. 30 Rear main bearing cap seals. Overhead Valve Sixes

1952-63 Six Cyl.

The rear main bearing cap contains the lower half of the crankcase journal oil seal and the cap itself is sealed to the block by two tapered vertical seals, Fig. 30.

With the crankshaft removed, take out the rear main bearing inserts and pry the seals from the block and cap. Clean the seal groove thoroughly.

Install a new journal oil seal in the bearing cap groove. Form the seal and cut it off flush with the face of the cap. Use a sharp knife and leave no ragged edges.

Repeat the procedure to form the upper half of the seal in the cylinder block groove. Install the bearing inserts. Lay the crankshaft in the block bearing halves, using care not to damage the thrust bearing (No. 3).

Install the bearing cap with seals, using special guide fixture shown in Fig. 31, if possible. Install the cap guide studs in the block. Place the bearing cap and fixture on the pilot studs and slide the cap over the studs and through the guide. Press the bearing cap carefully into place. Coat the surfaces lightly with grease to reduce friction during installation.

Be sure the cap-to-block seals do not shift while the cap is being installed. The seal must be seated all the way down to prevent oil leakage at the parting edge of the cap and block.

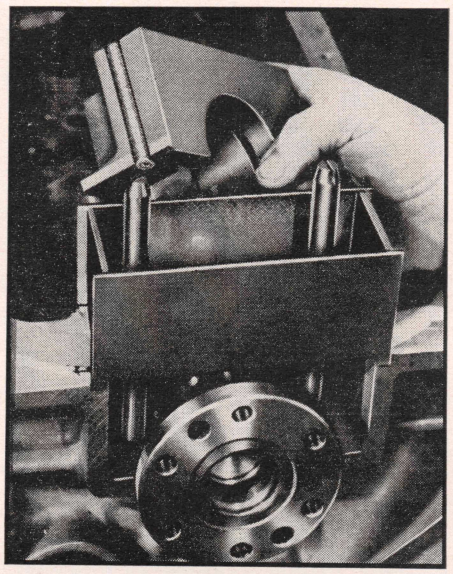

Fig. 31 Installing rear main bearing cap with aid of special guide fixture. 1952 Overhead Valve 6-215

Install the bearing cap bolts and torque them to 95-105 lbs. ft. The vertical cap-to-block seals should extend approximately $\frac{3}{64}$" above the block to insure a good seal against the oil pan gasket.

Check the cap-to-block seals by applying oil to the outside edges of the bearing cap. Apply compressed air to the corners of the cap inside of the block, and check the oil at the outside edge for bubbles. If any bubbling is appar-

ent, it will be necessary to remove the cap and reinstall it, making sure the cap-to-block seals seat all the way to the corner of the cap.

OIL PAN, REPLACE

1952-55 8-279 & 8-317

To remove the oil pan, disconnect the oil inlet tube at the pump. Remove the oil dipstick and tube. Unfasten and remove oil pan.

If it is necessary to remove the oil pump inlet tube and screen, remove the inlet tube retaining nut and pull the tube through the hole in the oil pan.

1954-55 8-239 & 8-256

To remove the pan, remove the engine front splash pans and disconnect the oil pump inlet tube at the pump. On Fordomatic equipped trucks, remove the converter housing dust cover. Crank the engine to bring No. 1 cylinder on top dead center. Then remove the oil pan.

If it is necessary to remove the oil pump inlet tube and screen from the pan, remove the retaining nut and pull the tube through the bore in the oil pan.

1956-57 V8s

1. To remove the pan, remove oil level dipstick and drain crankcase.
2. Remove engine front splash pans.
3. On Fordomatic equipped trucks, remove converter housing dust cover.
4. Disconnect oil inlet tube at pump and remove O-ring seal from pump end of tube.
5. On Tilt Cab trucks and on engines with Ram's Horn manifolds, crank engine to bring piston on TDC to remove oil pan.
6. On 302 and 332 engines, remove oil level indicator tube.
7. Unfasten and remove oil pan.

1954-57 Six Cyl.

To remove the oil pan, drain the crankcase and remove oil level dipstick. On 1957-58 models, remove engine left and right front splash aprons. Remove flywheel housing lower cover. Unfasten and remove the oil pan.

1958-63 Six Cyl.

To remove the pan, remove oil level dipstick and flywheel housing cover. Unfasten and remove oil pan after draining oil.

1958-63 V8-272, 292, 302, 332

1. To remove pan, drain oil and remove oil level dipstick.
2. On 302 and 332 engines, remove oil level dipstick tube.
3. On automatic transmission jobs, remove converter housing dust cover.
4. On Tilt Cab models, crank engine until No. 1 piston is up on T.D.C.
5. Disconnect oil pump inlet tube at oil pump. Remove "O" ring seal from pump end of tube.
6. Unfasten and remove oil pan.
7. Remove nut securing inlet tube to oil pan; then remove pump and screen from pan.

1958-63 V8-401, 477, 534

To remove pan, drain oil and remove oil level dipstick. Unfasten and remove oil pan.

1953 8-239

To remove the pan, remove the oil dipstick and tube. Remove starter motor and flywheel housing lower cover. Then unfasten and remove the oil pan.

1952-53 6-215

To remove the pan, pull the dipstick out of the tube, remove the retaining screws and drop the oil pan.

1952 8-239

To remove the oil pan, take off starter motor, clutch return spring and flywheel housing front cover. Remove road air breather duct. Remove steering gear arm and drop idler arm connecting rod until it hangs on spindle arms. Unscrew oil level indicator tube. Remove retaining screws and lower oil pan. *The two front screws can be reached through access holes provided in the frame front cross member. On some engines it will be necessary to disconnect the front engine supports and raise the front of the engine.*

1952-53 6-226 & 6-254

To remove the pan, take off splash pan and starter motor. Disconnect ventilator pipe bracket. Remove screws holding oil pan to engine rear plate. Unfasten oil pan from cylinder block and front cover plate and lower pan.

OIL PUMP REPAIRS

1954-55 8-239 & 8-256

To disassemble the pump, remove the cap screws retaining the cover to the pump body. Tap the cover gently with a soft hammer if stuck. *Do not tap on the end of the drive shaft.* Remove the gears from the body. Take out the relief valve parts. Pull the oil inlet pipe ferrule assembly from the large hole in the pump body.

Wash all parts and inspect the condition of each. The face of the pump cover should be checked for signs of wear or grooves that would cause an oil leak. Check the pressure relief valve plunger for wear. If a spring tester is available, check the tension of the relief valve spring which should be approximately 11 lbs. at 1.40". Check gears for signs of wear and pump body for cracks or excessive wear.

Replace any damaged parts and reassemble the pump.

1952-53 L-Head V8s

Before disassembling the pump, move the drive gear at the top of the unit from side to side. If the total movement is not in excess of .005", the pump need not be dismantled. If it is, however, it indicates worn bushings.

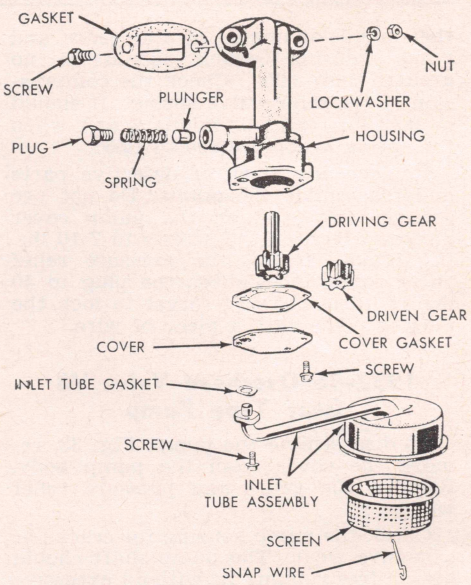

Fig. 32 Gear oil pump

To disassemble the pump, drive the pin from the drive gear and press the gear from the shaft. The bushings may then be pressed out of the housing and new ones installed.

When assembling the pump, press the gear onto the drive shaft so that there is .017" clearance between the bottom of the gear and the upper end of the pump body. Press the gear on at right angles to the old pin hole and drill a new hole in the shaft at that point. Use a $\frac{5}{32}$" drill and be guided by the hole in the gear hub when drilling the shaft. Install a new locking pin and peen the ends over so it won't work loose.

1952-53 L-Head Six

To disassemble, turn the pump upside down and turn the drive shaft until the outer rotor slips out of the housing. Drive out the pin securing the gear to the shaft, and press the gear off the shaft. The shaft and inner rotor may now be removed from the pump body.

To assemble, insert the inner rotor and shaft into the body. Line up the pin hole in the gear with the hole in the shaft and press the gear onto the shaft. New shafts are not drilled, and when installed as above, allow .004" drill clearance between the gear and body and drill the shaft. Then install the pin, peening over both ends so it won't work loose. Slide the outer rotor in position and install cover, using a new gasket.

1952-61 Six Cyl.

To disassemble the pump, Fig. 32, remove the upper drive shaft. Remove strainer and gasket. Take off the pump cover and remove the gears. Remove the lock wire and oil pressure relief valve parts.

Check the pump housing for cracks or excessive wear. The pump shaft should have a free running fit without excessive play in the bushings (.0005" to .0025"). Check the pump gear teeth for scratches or wear. Measure the clearance between

the outside diameter of the gears and pump housing, which should be no greater than .005″. Check the compression of the relief valve spring. It should be 9.82 lbs. (plus or minus 2 oz.) when the spring is compressed to 1.56″.

Replace any worn or defective parts and reassemble the pump. Do not use sealing compound on the pump cover gasket. Tighten the screws to 7-10 lbs. ft. torque. Install the pressure relief valve parts and tighten the plug to 40 lbs. ft. torque. Don't forget to lock the plug in place with a piece of wire.

1952-56 Overhead Valve V8 Gear Type Pump

To disassemble the pump, Fig. 33, remove the cover from the pump body. Remove the gears and pressure relief valve.

Check the pump housing for cracks or excessive wear. The pump shaft should have a free running fit without excessive play in the bushing (.0005″ to .0025″). Check the pump gear teeth for scratches or wear. Measure the clearance between the outside diameter of the gears and the pump housing—it should be no greater than .005″.

Check the compression of the relief valve spring. It should be 7.83 lbs. (plus or minus 2 oz.) when the spring is compressed 1.40″.

Replace worn or defective parts and reassemble the pump. Tighten cover plate screw to 8-10 lbs. ft. torque.

When installing the pump, insert the intermediate shaft in the block and rotate it slightly until it engages the distributor shaft. Note the position of the tang in the extension shaft and set the tang in the oil pump shaft so that it will engage with the slot. Place the pump housing in position on the block with a new gasket, install the three screws and tighten them to 15-20 lbs. ft. torque.

Do not use sealing compound on the gasket. Do not attempt to force the pump in position if it will not seat against the block. The tang on the pump driving shaft may be out of alignment with the tang in the intermediate shaft. Realign the tang if necessary.

1956-63 Overhead Valve V8 & 1962-63 Six Rotor Type Pump

When servicing the pump, the inner rotor and shaft, and the outer race are serviced as a kit. One part should not be replaced without replacing the other, Fig. 34.

When installing the pump, do not attempt to force it into position if it will not seat readily. The intermediate shaft hex may be misaligned with the distributor shaft. To align, rotate the intermediate shaft into a new position.

WATER PUMP, REPLACE

1954-55 Six-Cyl.

Two types of water pumps are used on these engines. One type has a fan and a sheet steel water pump pulley bolted to a pulley hub that is pressed on the pump shaft. The other type incorporates a cast iron pulley to drive the pump.

To remove the pump with the sheet steel pulley, remove the fan belt, fan and water pump pulley. Unfasten the pump from the block and lift it off.

To remove the pump having the cast iron pulley, remove the fan and generator belts. Then unfasten the pump from the block and lift it off.

1956-63 Six Cyl.

To remove pump, drain cooling system and disconnect lower hose and heater hose. Remove radiator, fan belt, fan and pump pulley. Unfasten and remove water pump from engine.

1958-63 V8-272, 292, 302, 332

To remove pump, drain cooling system and disconnect lower radiator hose, heater hose and water by-pass hose at water pump.

On low fan engines, remove fan belt, fan and pump pulley. Unfasten and remove pump from engine.

On high fan engines, remove fan belt, fan and bracket assembly, and generator belt. Unfasten and remove pump from engine.

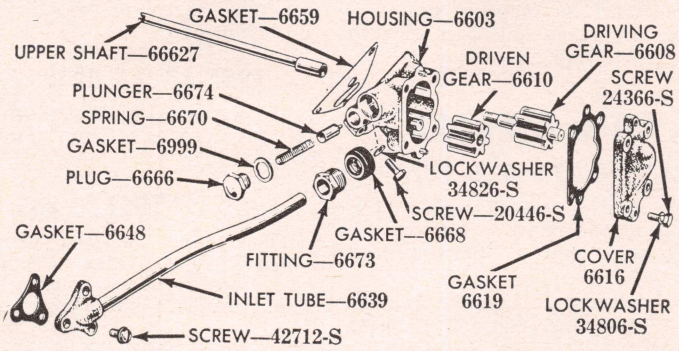

Fig. 33 Gear type oil pump

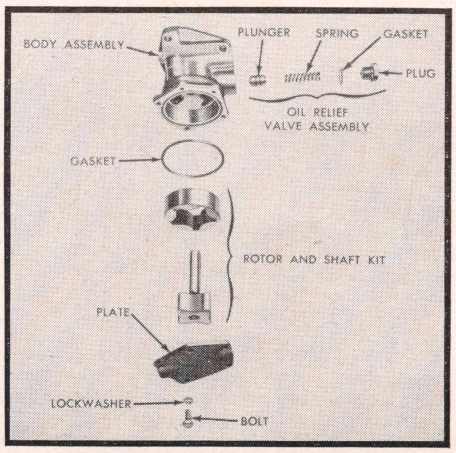

Fig. 34 Rotor type oil pump

1958-63 V8-401, 477, 534

To remove water pump, drain cooling system and disconnect radiator lower hose, heater hose and water pump by-pass hose at pump. Remove fan belt or belts.

On B, F and T-Series trucks, remove fan and pulley and lower them into the bottom of the radiator shroud. Unfasten and remove pump from engine.

On C-series models, unfasten and remove pump from engine.

1952-53 6-215, 1952-53 8-279 & 8-317, All 1954-57 V8s

To remove the pump, disconnect the lower radiator hose, water by-pass and heater hose. Remove fan belt, fan and generator belt. Unfasten the pump from the block and lift it off.

1952-53 8-239

To remove the pump, take off fan belts. On 1952 models, place jack under engine, then remove two capscrews securing water pump to engine front support. On all models, remove capscrew located inside pump hose opening. Then remove other three screws and lift off pump.

1952-53 6-254

To remove the pump, take off the fan and pulley. Remove lower radiator hose and heater hose. Unfasten and remove pump from engine.

WATER PUMP REPAIRS

Figs. 35 to 41 illustrate the pumps used on the various engines. They are all of the sealed bearing type and repair kits are available when it becomes necessary to overhaul them.

RADIATOR, REPLACE

1958-63 B, F, T Series

1. Drain cooling system and disconnect upper and lower hoses.
2. On automatic transmission jobs, disconnect oil cooler lines at radiator.
3. If equipped with air compressor, remove compressor belt before removing fan assembly.

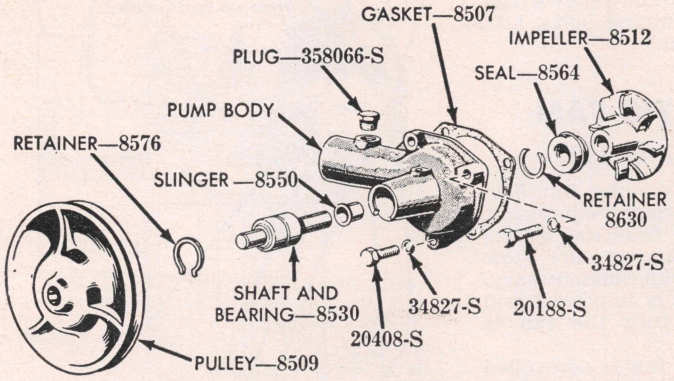

Fig. 35 Water pump. 1952-53 Overhead Valve Sixes

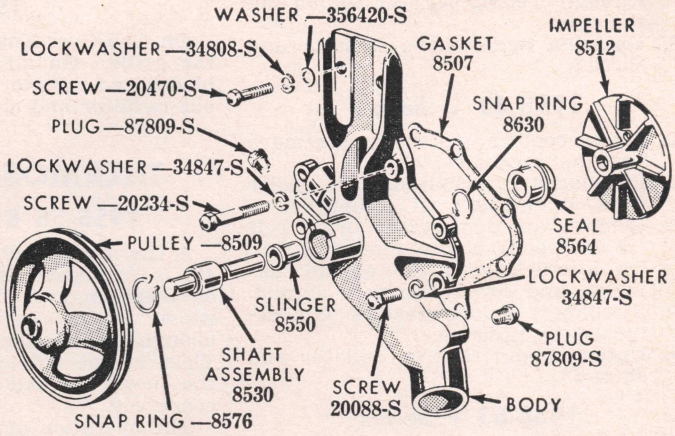

Fig. 36 Water pump. 1952-55 8-279 and 8-317 engines

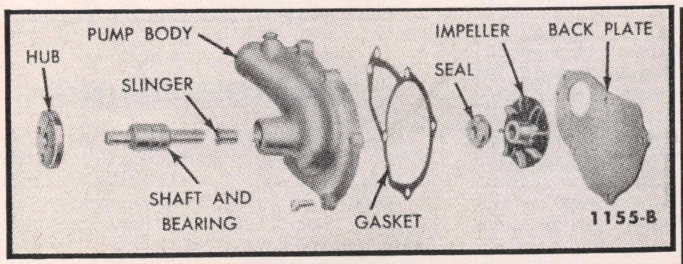

Fig. 37 Water pump. 1956-57 Six

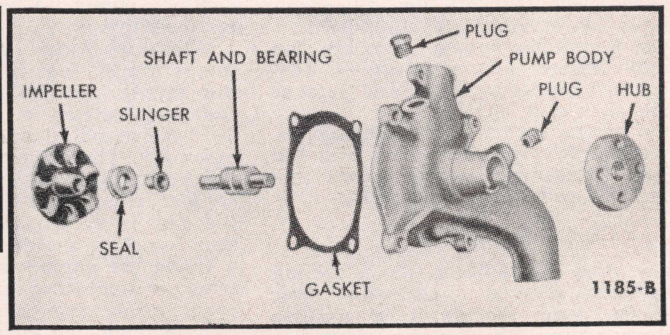

Fig. 38 Water pump. 1956-57 V8

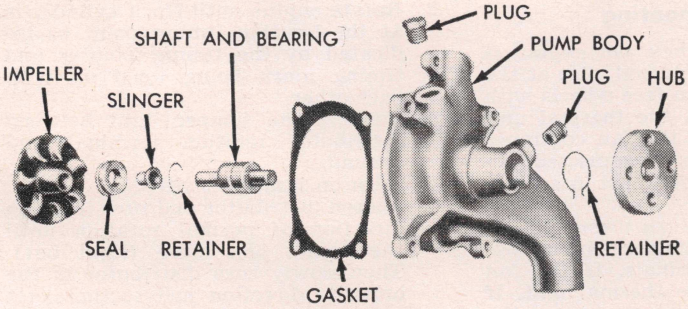

Fig. 39 Water pump. V8-272, 292, 302, 332

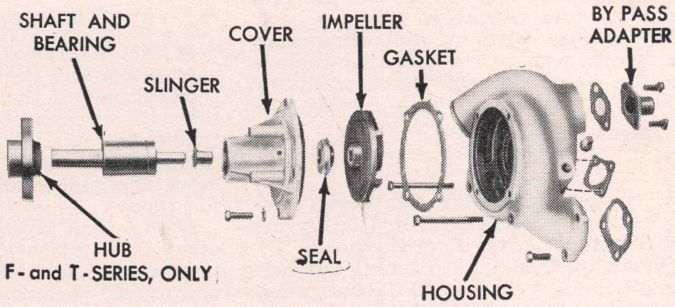

Fig. 40 Water pump. V8-401, 477, 534

4. On F models with six-cylinder engine, unfasten and remove radiator.
5. On F and T models with 272 or 292 engine, loosen generator adjusting bracket bolts. Then remove fan, spacer, pulley and fan belt. Then unfasten and remove radiator.
6. On F and T models with 302 or 332 engine, remove fan belt, fan, pulley, and mounting bracket as an assembly. Then unfasten and remove radiator, shroud and hoses as an assembly.
7. On F and T models with a Super Duty engine, unfasten and lower fan into radiator shroud. Unfasten and tilt shroud to rear, then remove fan

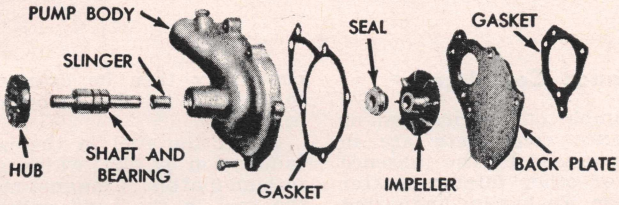

Fig. 41 Water pump. 1958-63 Six-cylinder

through opening between shroud and radiator.
8. Unfasten and remove radiator and shroud.

1958-63 C Series

1. Drain cooling system and remove hose as necessary.
2. Disconnect transmission oil cooler lines at radiator (if equipped).
3. Remove air compressor drive belt (if equipped) before removing fan. On a truck with SD engine, unfasten and lower fan into shroud.
4. Disconnect linkage, cables, etc. attached to radiator.
5. Unfasten and remove radiator and shroud.

1958-63 P Series

1. Remove hood and drain cooling system.
2. Remove grille, headlamps, parking lamps, wind deflector and hood lower weatherstrip as an assembly.
3. Disconnect transmission oil cooler lines at radiator (if equipped).
4. On 6-cylinder trucks, remove fan and bracket as an assembly. Disconnect radiator hoses and remove radiator and shroud.
5. On trucks with 272 and 292 engines, remove fan, spacer, pulley and fan belt. Disconnect water hoses and remove radiator and shroud.

1956-57

To remove the radiator, drain cooling system and remove upper and lower hoses. On some models it is possible merely to remove the fan shroud attaching bolts, move the shroud back over the fan, then unfasten and remove the radiator.

On other truck models, remove the fan assembly, then remove the shroud and radiator as an assembly.

If equipped with an air compressor, remove the compressor belt, then remove the fan assembly. On Parcel Delivery models, it is necessary to remove the hood.

1953-55

If equipped with air compressor, remove compressor drive belt. On Parcel Delivery models, take off the hood.

On all models, take off fan, fan belt and all radiator hoses. Unfasten radiator from its mounting and lift out radiator and shroud.

1952

On Cab-Over-Engine models, take off the grille. On all models, remove fan blades and radiator retaining bolts. Lift out radiator and shroud.

THERMOSTATIC FAN

1956-58 8-302 & 332

A thermostatically-controlled fan, Fig. 42, is furnished as optional equipment on these engines. This fan free wheels when engine temperatures are low enough to make fan cooling unnecessary. Thus, engine efficiency is improved and the power needed to turn the fan is conserved.

The operation of the fan is controlled by a thermal unit mounted in the water outlet elbow. The operation of the thermal unit is similar to that of the engine thermostat. Expansion crystals, acting against a piston, open and close the contact points in response to engine temperature.

When the engine heats up to a specific temperature, the crystals expand and the points in the thermal unit close. This completes the circuit through the field coil mounted on the rotor and pulley assembly. The pulley assembly becomes magnetized and draws the armature into contact with the rotor facings so that the fan is driven, providing the additional cooling required.

When the engine is cold, or when the truck is operating at normal over-the-road speeds, the thermal unit contacts remain open. No current flows through the rotor and pulley assembly. The armature remains out of contact with the pulley rotor facings so that the fan free wheels.

Trouble Shooting

If the fan turns when the engine is cold, disconnect the field coil wire at the thermal unit. If the fan free wheels with the wire disconnected, the thermal unit should be replaced. If the fan continues to turn with the wire disconnected, remove the pulley and bracket assembly for repair.

If the fan will not turn when the engine is hot, place a jumper wire across the thermal unit terminals. If the fan now turns, replace the thermal unit. If the fan still does not turn, remove the pulley and bracket assembly for repairs.

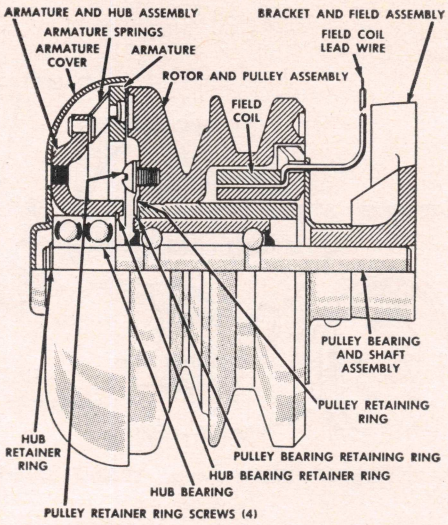

Fig. 42 Thermostatic fan mechanism. 1956-58 302 and 332 engines

IGNITION TIMING

If a timing light is to be used to set ignition timing, disconnect the vacuum advance pipe to the carburetor and place a piece of tape over open end of pipe. *This is important as carburetor trouble can affect timing adjustments.*

Lacking a power timing light, an accurate method of setting ignition timing with the engine stopped is with the aid of a jumper light. Be sure to use a light bulb that corresponds with the system voltage of the vehicle.

1. Remove distributor cap and rotor and see that the breaker gap is set according to specifications.
2. Rotate engine until No. 1 cylinder is at the ignition timing point as indicated by the timing pointer and timing mark being lined up with each other.
3. Connect the jumper light between distributor ignition terminal and ground.
4. Turn on ignition switch.
5. Loosen distributor and turn it in the direction of normal rotation until the points just close (light out). Then slowly turn distributor in the opposite direction just to the exact point that the light goes on. Tighten distributor in this position.

Carburetor & Governor Section

Performance Complaints

Flooding, stumble on acceleration or other performance complaints are in many instances caused by the presence of dirt, water or other foreign matter in the carburetor. To aid in diagnosing the cause of the complaint, the carburetor should be carefully removed from the engine without draining the fuel from the bowl. The contents of the fuel bowl may then be examined for contamination as the carburetor is disassembled.

Check the fuel in the bowl for contamination by dirt, water, gum or other foreign matter. A magnet moved through the fuel in the bowl will pick up and identify any iron oxide dust that may have caused intake needle and seat leakage.

Inspect gasketed surfaces between body and air horn. Small nicks or burrs should be smoothed down to eliminate air or fuel leakage. On carburetors having a vacuum piston, be especially particular when inspecting the top surface of the inner wall of the bowl around the vacuum piston passage. A poor seal at this location may contribute to "cutting-out on turns" complaint.

Fill the carburetor bowl with clean fuel before installing on manifold. This

will help prevent dirt trapped in the fuel system from being dislodged by the free flow of fuel as the carburetor is primed. The operation of the floats and intake needle and seats may be checked under pressure if the fuel pump is used at the bench to fill the carburetor bowl. Operate the throttle several times and visually check the discharge of the pump jets.

Poor Mileage and Engine Loading Complaints

Cases of poor mileage and engine loading on carburetors with automatic choke may be due in many instances to sluggish choke valve opening during cold driveaway, caused by insufficient vacuum in choke housing, a plugged or restricted heat pipe or inlet in choke cover. To check for this condition, have engine warm and running at slow idle. Remove choke heat pipe and hold a finger over the heat inlet hole (hole is on choke housing on some carburetors). If there is little or no vacuum pull on the finger, check the choke housing for gasket leaks or plugged vacuum passages. If these are OK, check choke vacuum passages in carburetor between choke housing and manifold.

Dirty or Rusty Automatic Choke Housing

In cases where it is found that the interior of the choke housing is dirty, gummed or rusty while the carburetor itself is comparatively clean, look for a punctured or eroded manifold heat tube (if one is used).

CARBURETOR ADJUSTMENTS

Year	Engine	Carb. Type	Idle Screw Turns Open	Fast Idle Setting	Fuel Level	Float Level Primary	Float Level Secondary	Pump Setting	Dashpot Setting
1952–53	6-215	1 Barrel	1½	None	11/16 ⑥	.306 ⑦	None	⑨	None
	6-254	1 Barrel	1½	None	11/16 ⑫	1½ ⑬	None	⑭	None
	V8-239	2 Barrel	1½	None	11/16 ⑫	1½ ⑬	None	⑭	None
	V8-279	2 Barrel	1½	None	½ ⑯	½ ⑰	None	⑭	None
	V8-317	2 Barrel	1½	None	½ ⑯	½ ⑰	None	⑭	None
1954–55	6-223	1 Barrel	1½	None	11/16 ⑥	.306 ⑦	None	⑨	None
	V8-239	2 Barrel	1½	None	11/16 ⑫	1½ ⑬	None	⑭	None
	V8-256	2 Barrel	1½	None	½ ⑯	½ ⑰	None	⑭	None
	V8-279	2 Barrel	1½	None	½ ⑯	½ ⑰	None	⑭	None
	V8-317	2 Barrel	1½	None	½ ⑯	½ ⑰	None	⑭	None
1956	6-223	1 Barrel	1½	None	11/16 ⑥	.306 ⑦	None	⑨	.045–.064 ⑧
	V8-272MD	2 Barrel	1½	None	11/16 ⑫	1¾ ⑬	None	⑭	.045–.064 ⑧
	V8-272HD	2 Barrel	1½	None	½ ⑯	¼ ⑰	None	⑭	.045–.064 ⑧
	V8-302	4 Barrel	1½	None	½ ⑯	¼ ⑰	None	⑭	None
	V8-332	4 Barrel	1½	None	½ ⑯	¼ ⑰	None	⑭	None
1957	6-223	1 Barrel	1½	None	11/16 ⑥	.306 ⑦	None	⑨	.045–.064 ⑧
	V8-272MD	2 Barrel	1	None	11/16 ⑫	1¾ ⑬	None	⑭	.045–.064 ⑧
	V8-272HD	2 Barrel	1–1½	None	½ ⑩	13/16 ④	None	.015 ⑤	None
	V8-302	4 Barrel	1–1½	None	⑮	13/16 ④	¾ ④	.015 ⑤	None
	V8-332	4 Barrel	1–1½	None	⑮	13/16 ④	¾ ④	.015 ⑤	None
1958	6-223	1 Barrel	¾–1¾	None	11/16 ⑥	13/64 ⑦	None	⑨	.045–.064 ⑧
	V8-272MD	2 Barrel	1–1½	None	½ ⑩	13/16 ④	None	.015 ⑤	.045–.064 ⑧
	V8-292MD	2 Barrel	1–1½	None	⑪	13/16 ④	None	.015 ⑤	.045–.064 ⑧
	V8-272HD	4 Barrel	1–1½	.005–.008 ②	½ ⑩	13/16 ④	¾ ④	.015 ⑤	None
	All Other V8s	4 Barrel	1–1½	.005–.008 ①	⑪	13/16 ④	¾ ④	.015 ⑤	None
1959	6-223	1 Barrel	¾–1¾	None	11/16 ⑥	13/64 ⑦	None	⑨	.045–.064 ⑧
	8-292MD	2 Barrel	1–1½	.005–.008 ②	③	⅞ ④	None	.015 ⑤	None
	H D V8s	4 Barrel	1–1½	.005–.008 ①	③	⅞ ④	¾ ④	.015 ⑤	None
	S D V8s	4 Barrel	1–1½	.005–.008 ②	③	⅞ ④	¾ ④	.015 ⑤	None
1960–63	6 Cyl.	1 Barrel	1–1½	None	11/16 ⑥	13/64 ⑦	None	⑨	.060–.090 ⑧
	292 M.D.	2 Barrel	1–1½	.005–.008 ②	③	⅞ ④	None	.015 ⑤	None
	401, 477	2 Barrel	1–1½	.005–.008 ②	③	⅞ ④	None	.015 ⑤	None
	302, 332	2 Barrel	1–1½	.005–.008 ②	③	④	None	⑤	.060–.090
	302, 332	4 Barrel	1–1½	.005–.008 ①	③	⅞ ④	¾ ④	.015 ⑤	None
	401, 477, 534	4 Barrel	1–1½	.005–.008 ②	③	⅞ ④	¾ ④	.015 ⑤	None

FORD & HOLLEY NOTES

①—The fast idle screw is located in governor housing. With hot idle speed properly adjusted, and primary throttle plates closed, clearance between fast idle cam and head of fast idle screw should be as listed. If not correct, remove governor housing and insert a .060" diameter rod into hole in end of fast idle screw fitting to prevent it from turning. Then turn fast idle screw as required to obtain proper clearance.

②—With hot engine idle properly set and choke valve wide open, turn fast idle adjusting screw in until there is the clearance listed between screw and fast idle cam. To obtain clearance, turn screw in until it just touches fast idle cam, then back off ⅛ to ¼ turn.

③—Fuel level within bowl should be at lower edge of sight plug opening (plus or minus $\frac{1}{16}$"). With engine stopped, loosen lock screw on top of fuel bowl just enough to allow rotation of adjusting nut underneath. Turn adjusting nut as required to obtain proper level.

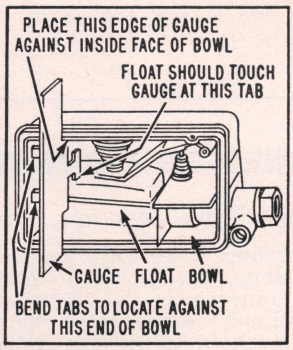

Fig. ④—Between floor of fuel bowl and bottom of float (fuel bowl inverted).

⑤—Pump stroke controlled by two holes in pump cam with top hole for short stroke (summer), lower hole for winter operation. To adjust pump lever screw, with primary throttle valves wide open there should be .015" clearance between pump lever adjusting screw head and pump arm with pump arm fully depressed (manually). Turn screw in to increase clearance and vice-versa.

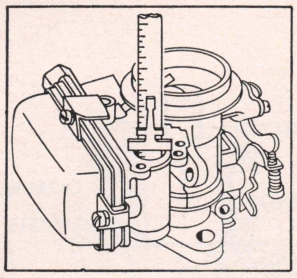

Fig. ⑥—Below power valve mounting surface (plus or minus $\frac{1}{32}$").

⑦—From roof of float chamber to lowest point of float (carb. inverted).

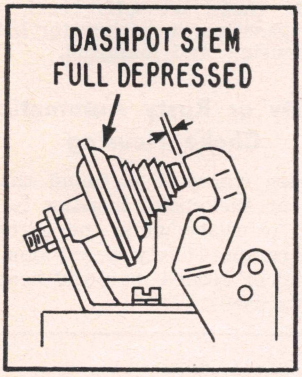

Fig. ⑧—Dashpot setting.

⑨—Seasonal setting. Inner hole for long stroke, outer for short stroke.

⑩—Below centerline of main discharge nozzles.

⑪—Lower edge of sight plug opening.

⑫—Below surface of fuel bowl.

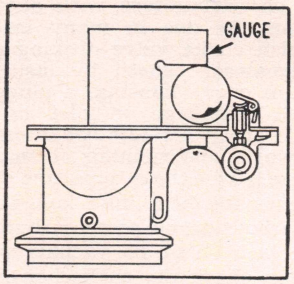

Fig. ⑬—From 1.437" to 1.5" from air horn gasket surface to bottom of float.

⑭—Three holes are provided in throttle lever for seasonal settings. Shortest stroke for hot weather, center hole for average conditions and longest stroke for winter.

⑮—Primary ½", secondary ⅝". Measure from below centerline of main discharge nozzles.

⑯—Measured from flange surface of main body with engine idling.

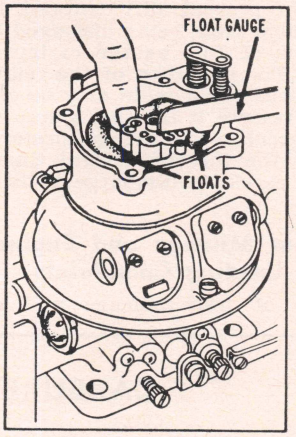

Fig. ⑰—From flange surface to top of float.

CARBURETOR GOVERNOR

Vacuum Type Governor, Fig. 1

The vacuum type governor consists of two units, the governor rotor and housing (on which the distributor is mounted), and the diaphragm control assembly, mounted on the side of the carburetor throttle body. These units are connected by two vacuum lines.

A driveaway throttle stop is installed in the diaphragm control housing of new vehicles. This stop must be removed before putting the truck in service because it severely limits the amount of throttle opening attainable.

To remove the throttle stop, take off the cover plate and remove the screw retaining the throttle stop and remove the stop.

Vacuum Governor, Adjust

Connect a tachometer to the engine. Run the engine until normal operating temperature has been reached. Then run then engine at wide open throttle and note the engine speed registered.

Stop the engine and remove the adjusting hole plug from the controlling unit housing. With ignition switch off, crank the engine until the governor valve adjusting screw is aligned with the adjustment hole. Turn the adjusting screw clockwise to increase speed and counter-clockwise to decrease speed. One full turn of the adjusting screw will change top speed about 150 rpm. Replace the plug.

Start the engine and gradually increase the throttle opening, observing the tachometer, until the no-load cut-off speed is reached. If the cut-off is not

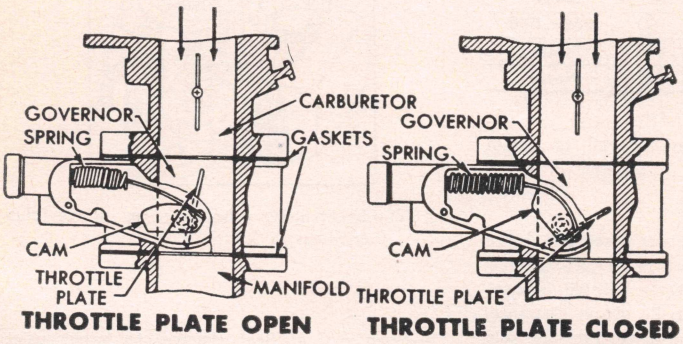

Fig. 2 Velocity type governor

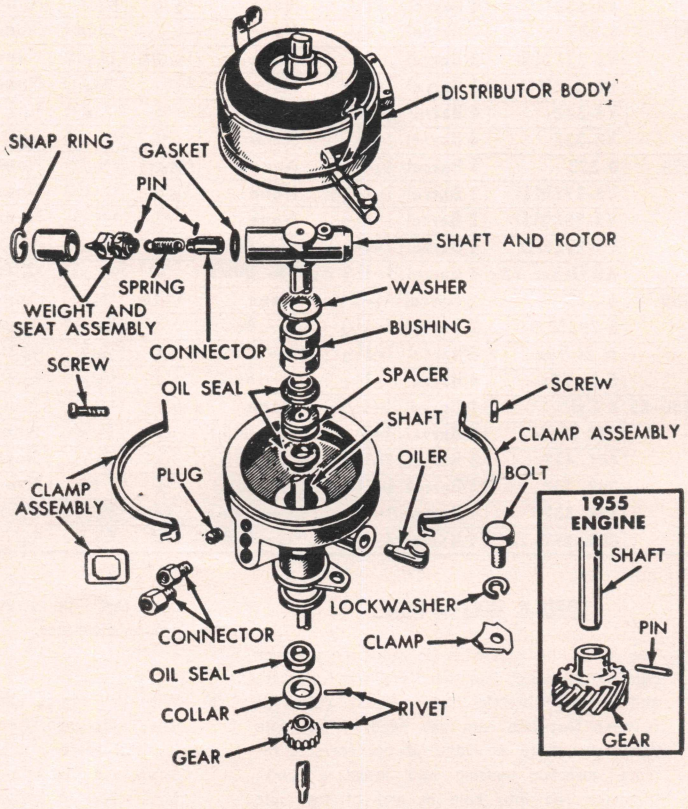

Fig. 1 Vacuum type governor disassembled

within the specified range, stop the engine and make the necessary correction at the governor adjusting screw. Repeat the test until the correct cut-off speed is obtained.

Before sealing the governor, make sure the air bleed pipe union nuts and the adjusting hole plug are tight. Air entering the diaphragm from any source other than the rotor orifice will cause faulty governor control.

Velocity Type Governor, Fig. 2

The velocity type governor, Fig. 2 has a single unit for controlling engine speed. It is mounted between the carburetor and intake manifold. No provision for repair of this type governor is provided; therefore, it should be replaced when it becomes defective.

The governor is adjusted by turning an adjusting cap on the spring housing. If the engine rpm must be increased, turn the cap counterclockwise. If it has to be decreased, turn the cap clockwise. When final adjustment is complete, seal the cap to the mounting studs with a governor seal.

Clutch Section

HYDRAULIC CLUTCH RELEASE, 1957-63

On these models, the clutch is released by a hydraulic system, Figs. 1 and 2. When the clutch pedal is depressed, fluid is forced from the master cylinder into a slave cylinder. The slave cylinder push rod moves the clutch release lever which in turn pivots on a trunnion in the flywheel housing, and forces the release bearing against the pressure plate release fingers.

When the clutch pedal is released, the master cylinder return spring and the release lever retracting spring force the fluid from the slave cylinder back to the master cylinder.

The fluid used in this system is the same as that used in the brake system. A bleeder fitting is installed on the slave cylinder and procedures for bleeding are the same as those for brakes. The master cylinder fluid level should be maintained at ½" below the top of the master cylinder reservoir.

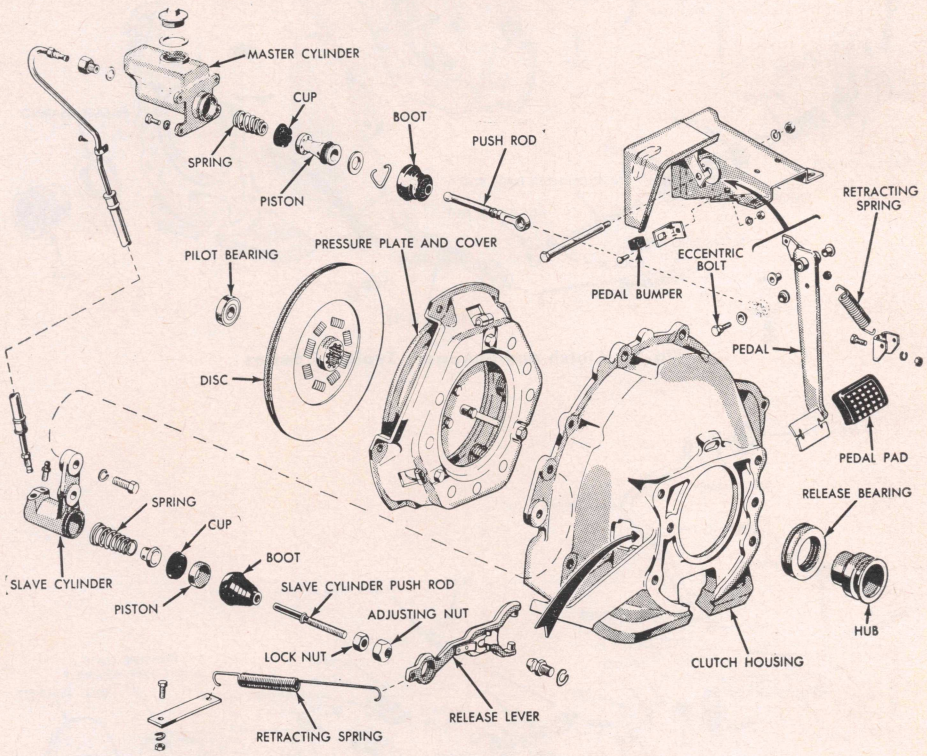

Fig. 1 Clutch and linkage. Typical F Series

CLUTCH PEDAL, ADJUST

Mechanical Release, 1961-63

1. Adjust clutch pedal stop to permit total pedal travel of $8\frac{1}{16}$" to $8\frac{5}{16}$".
2. Adjust clutch pedal free travel to 1⅜" to 1½" by backing off jam nut and adjusting spherical nut on release push rod. There should be ¼" clearance between spherical nut and release lever. Make this adjustment with retracting spring in place. Tighten jam nut.

Hydraulic Release, 1961-63

Before making any adjustments, be sure that the system is free of air and that the master cylinder fluid is at the specified level.

F and T Series

1. Adjust pedal stop to permit total pedal travel of $8\frac{1}{16}$" to $8\frac{3}{16}$".
2. Set clutch pedal initial free travel to $\frac{3}{16}$" to ⅜" by adjusting the eccentric bolt. This measurement is taken at the centerline of the pedal pad.
3. If necessary, readjust pedal stop to maintain initial specified free travel.
4. With retracting spring disconnected, push slave cylinder push rod toward front of truck as far as possible. Pull release lever back until release bearing touches pressure plate release fingers.
5. Adjust clearance between slave cylinder push rod spherical nut and release lever to ¼" ($\frac{3}{16}$" on 850 to 1100 Series) for proper free travel. Tighten jam nut. *As a result of this adjustment, there should be a final free travel of at least 2". Do not change proper free travel adjustments to bring about desired total travel.*

C Series

1. Adjust eccentric bolt and pedal stop to give $\frac{5}{32}$" to ¼" of initial free travel before master cylinder push rod contacts piston. This measurement is taken at centerline of pedal pad.
2. Disconnect release lever retracting spring. Push slave cylinder push rod the full distance of its travel toward front of truck. Pull release lever toward rear of truck until release bearing touches release fingers.
3. Adjust clearance between slave cylinder push rod spherical nut and release lever to $\frac{3}{16}$" (¼" on 850 to 1100 Series) to obtain final pedal travel. As a result of this adjustment, there should be a final free travel of approximately 1½" (2" on 850 to 1100 Series). Tighten jam nut.

H and HT Series

1. Adjust clutch pedal height to 10⅜" by moving bumper and its bracket.
2. By means of eccentric bolt, adjust initial free pedal travel ⅛" to ¼".
3. Disconnect release lever retracting spring. Push slave cylinder push rod the full distance of its travel for-

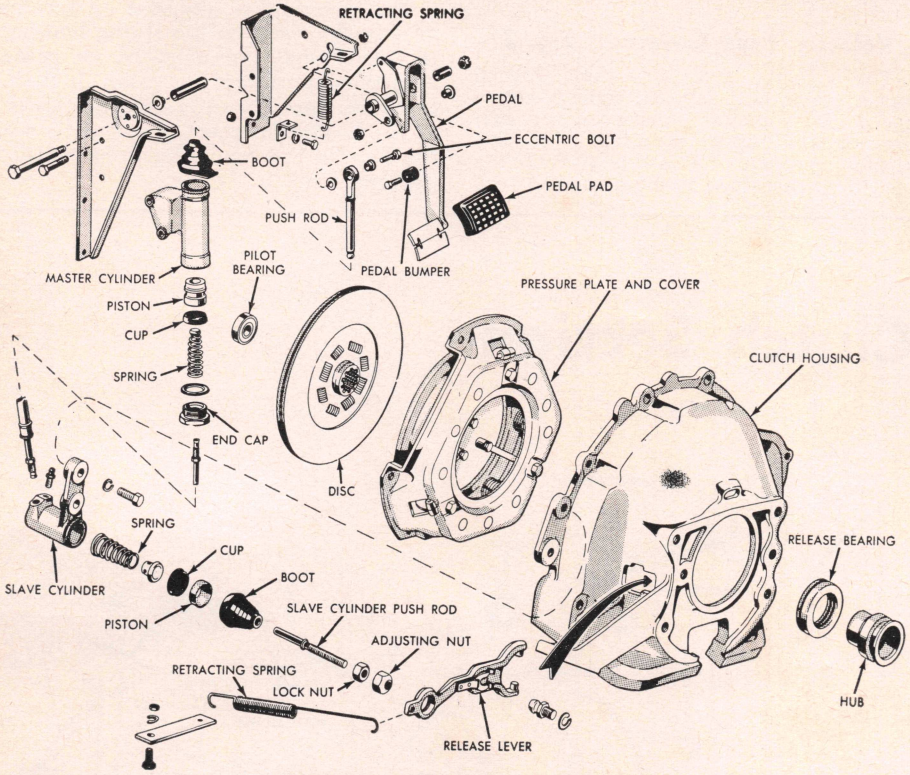

Fig. 2 Clutch and linkage. Typical C Series

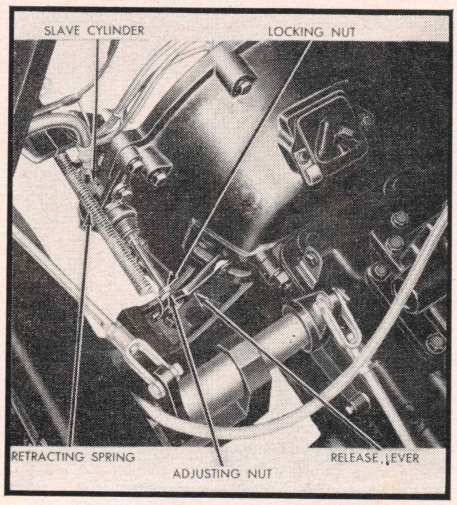

Fig. 3 Slave cylinder push rod adjustment

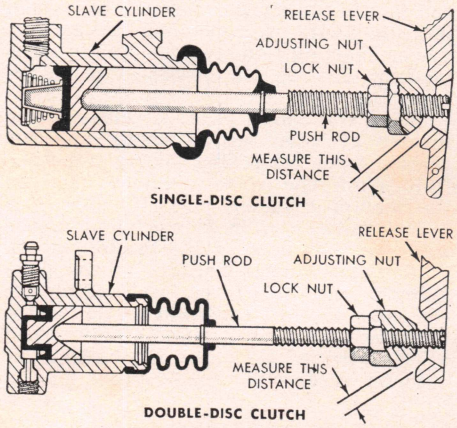

Fig. 4 Hydraulic clutch release slave cylinder and release lever. Dimension indicated to be not less than 1/4"

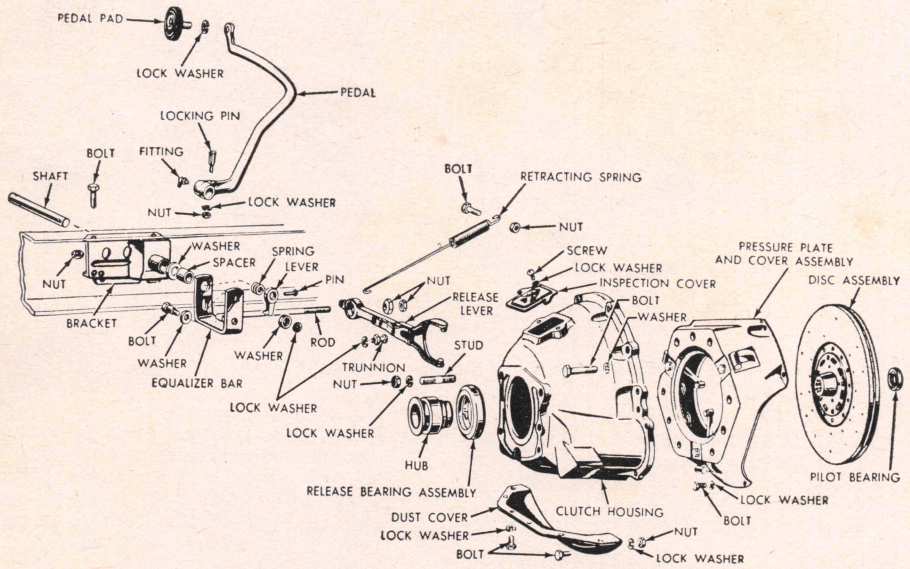

Fig. 5 Clutch and linkage. 1953-56 (typical)

ward, and move release lever to the rear until release bearing touches release fingers.

4. Adjust clearance between slave cylinder push rod spherical nut and release lever to $\frac{3}{16}$" to obtain final free travel. As a result of this adjustment, there should be final free travel of approximately 1½". Tighten jam nut.

P Series

1. Adjust clutch master cylinder push rod extension to give $\frac{1}{16}$" to ¼" initial free travel. This adjustment should be checked with clutch pedal retracting spring attached.
2. Disconnect release lever retracting spring. Adjust clearance between slave cylinder push rod spherical nut and clutch release lever to ¼". As a result of this adjustment, there should be a final free travel of at least 2".

1959-60

1. Adjust clutch pedal total travel by locating clutch pedal bumper so that clutch pedal pad in fully released position is even with brake pedal pad.
2. Disconnect clutch release lever retracting spring. *Do not put pressure on clutch pedal while spring is disconnected.*
3. Bottom slave cylinder push rod and piston by pushing slave cylinder push rod toward front of vehicle as far as it will go.
4. Pull release lever toward rear of truck until release bearing touches pressure plate release fingers.
5. Adjust clearance between slave cylinder push rod adjusting nut and clutch release lever to no less than ¼". Tighten lock nut.
6. Adjust clutch master cylinder push rod eccentric bolt to obtain $\frac{3}{16}$" to ⅜" (¼" on C Series) free travel measured at the centerline of the pedal pad before push rod touches master cylinder.
7. Check free travel at clutch pedal.

The adjusted clearance at slave cylinder push rod and pedal free travel at master cylinder push rod should result in final free travel of at least 2" ($1\frac{13}{16}$" on C Series). *An F, C or T Series truck with a Super Duty engine should have 1⅝" clearance.*

1957-58

There are only two adjustments which can be made on the clutch. The clutch pedal total travel and the clutch pedal free travel.

The pedal total travel should be adjusted so that the clutch pedal pad at the fully-released position is parallel with the brake pedal pad.

The clutch pedal free travel should be adjusted to not less than 1¾" and not more than 2". It can be adjusted as follows:

1. Adjust clutch pedal total travel so that pedal pad in the fully-released position is even with brake pedal pad.
2. Disconnect the clutch release lever retracting spring.
3. Bottom the slave cylinder push rod and piston by pushing the slave cylinder push rod toward the front of the truck as far as it will go, Fig. 3.
4. Pull the release lever toward the rear of the truck until the release bearing touches the pressure plate release fingers.
5. Adjust the clearance between the slave cylinder push rod adjusting nut and the clutch release lever to ¼", Fig. 4.
6. Adjust the clutch master cylinder push rod eccentric bolt to obtain ¼" free travel at the pedal pad before the push rod touches the master cylinder piston. On Parcel Delivery trucks, adjust the master cylinder extension rod to obtain ¼" free travel at the pedal pad.
7. Check the free travel at the clutch pedal. The above adjustments should result in a clutch pedal free travel of 1¾ to 2".

1952-56

The only clutch adjustment required is the clutch pedal free travel. To check the free travel, depress the clutch pedal by hand, then measure the distance the clutch pedal travels before the clutch begins to engage.

The free pedal travel for all trucks is 1⅛ to 1⅜". If the free travel is not within these limits, adjust as follows:

On 1952 models, remove the clevis pin connecting the pedal to the release arm rod and rotate the clevis until the proper free pedal travel is obtained. Install the clevis pin.

On 1953-56 models, loosen the lock nut on the forward end of the clutch release lever rod and turn the adjusting nut on the rod until the proper pedal free travel is obtained. Hold the adjusting nut and tighten the lock nut securely, Fig. 5.

CLUTCH REPLACE

1. On 1952 models, disconnect clutch release equalizer shaft from clutch release shaft. Remove transmission with clutch housing where separate housing is used. Unhook clutch release bearing spring and remove the clutch release bearing and hub from the transmission main drive gear bearing retainer. Remove the two-piece flywheel housing or one-piece housing, depending on the type being serviced.
2. On 1953-61 models, disconnect clutch pedal retracting spring from clutch release lever. On 1957-63 models, remove the two bolts which attach the slave cylinder to the flywheel housing and remove the slave cylinder push rod from the release lever. Remove release lever rod. Remove transmission from clutch housing. Remove release bearing and hub from release lever, Figs. 1, 2, 4.
3. On all models, mark the clutch assembly and flywheel so the parts may be installed in the same relative position.
4. Loosen the clutch-to-flywheel attaching bolts a little at a time until the tension on the clutch springs is relieved. Then unscrew the bolts completely and remove the clutch assembly and driven disc.

Installation

1. Coat pilot bearing bore in flywheel with a small amount of wheel bearing grease. *Avoid using too much grease as it may be thrown on the clutch disc when the clutch revolves.*
2. Install pilot bearing in flywheel. On 12" clutch, install the bearing with its shielded side toward the rear.
3. Install clutch pilot tool in clutch disc and position disc on flywheel so that the pilot tool enters the pilot bearing.
4. Position pressure plate and cover assembly on flywheel and install the retaining cap screws. Tighten the cap screws to a torque of 17-20 lb. ft. If the original clutch is being installed, be sure to align the marks made prior to removal.
5. On 1952 models, remove the pilot tool and attach the flywheel housing to the engine and torque the bolts to 37-42 lb. ft. Place the clutch release bearing and hub on the transmission main drive gear bearing retainer, then install the release bearing retracting spring. Install the transmission. Connect the clutch equalizer shaft to the release shaft and adjust the clutch pedal free play.
6. On 1953-60 models, position the release bearing and hub on the release lever. Install the transmission. Position release bearing and hub on the release lever. On 1957-60 models, install the slave cylinder and adjust the push rod. Position the release lever rod in the equalizer bar and in the release lever. Install adjusting nut and lock nut on release rod. Connect the clutch pedal retracting spring to the release lever and check the clutch pedal free travel.

Manual Shift Transmission Section

For Clark, Fuller, New Process, Spicer and Warner transmissions used on Ford trucks, see the "name" chapter for service procedures and lubricant capacities

3 SPEED UNITS

Remove & Replace, 1952

1. Remove seat cushion and floor plate.
2. Support rear of engine.
3. Disconnect drive shaft.
4. If equipped with remote control gearshift mechanism, disconnect linkage at transmission.
5. Disconnect clutch equalizer shaft.
6. Disconnect speedometer cable.
7. Disconnect transmission at engine rear support and at flywheel housing.
8. Pull transmission to rear and lift out through floor opening.
9. Reverse foregoing to install.

Remove & Replace, 1953-57

1. Remove floor mat and floor plate.
2. Loosen two nuts that secure top of transmission to clutch housing studs.
3. Raise truck and drain lubricant from transmission.
4. Disconnect drive shaft.
5. If truck is equipped with band-type parking brake, disconnect cable at brake and at gear shift housing.
6. Disconnect gear shift linkage at transmission, then disconnect clutch pedal retracting spring from clutch release lever.
7. Remove capscrews which attach clutch release equalizer bar anchor bracket to transmission.
8. Disconnect speedometer cable.
9. Remove dust cover from bottom of clutch housing.
10. Place jack under transmission.
11. Unfasten transmission from clutch housing, pull transmission to the rear end and lower it to the floor.
12. Reverse the foregoing to install.

Remove & Replace, 1958-62

1. Place jack under transmission and disconnect speedometer cable.

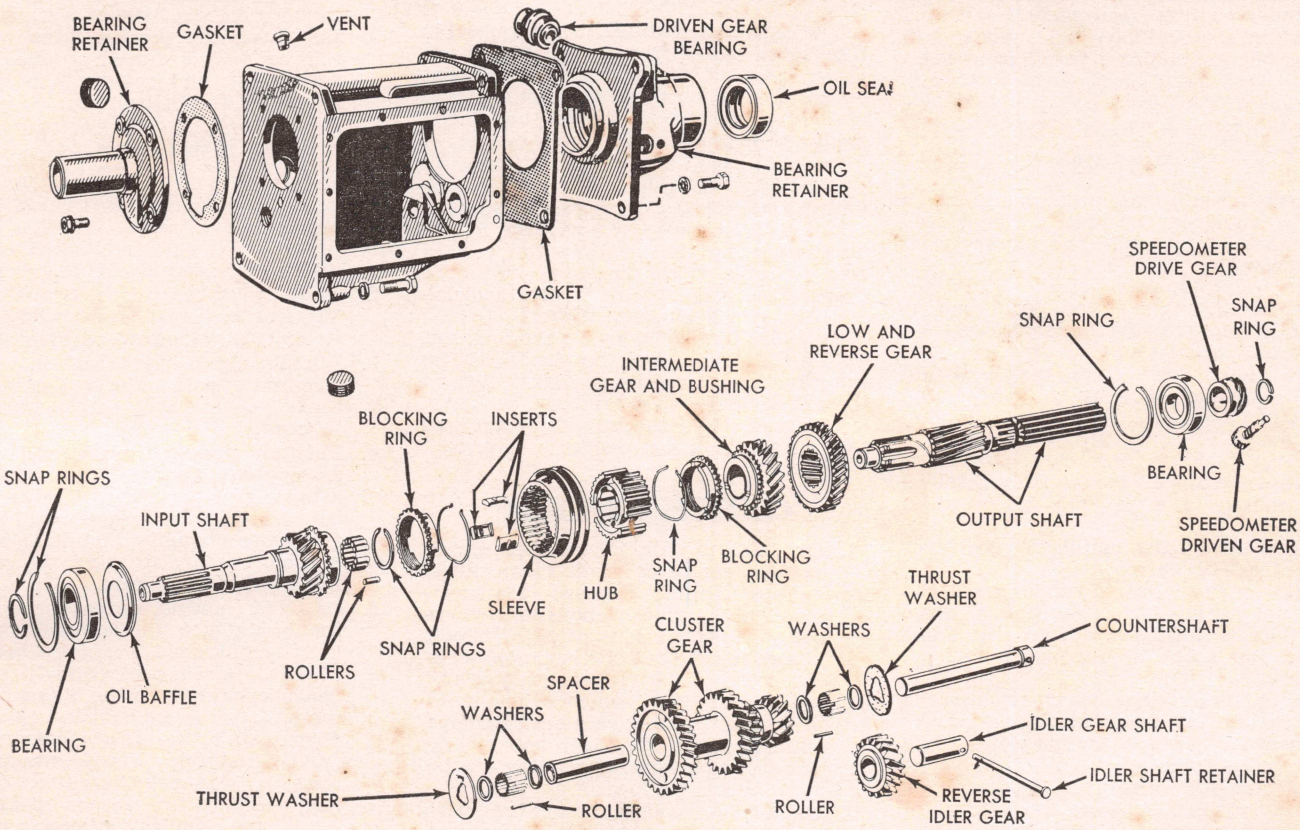

Fig. 1 Ford light duty three-speed transmission. 1953-62

2. Disconnect gearshift linkage at transmission.
3. If equipped with band-type parking brake band, disconnect brake cable clevis at cam and remove cable conduit clamp.
4. Disconnect drive shaft.
5. Remove transmission attaching bolts and attach guide studs.
6. Move transmission to the rear until clutch gear shaft clears clutch housing and lower transmission.

Ford Trans. Disassemble

1. Referring to Figs. 1 and 2, remove gear shift housing.
2. With a punch, drive out retainer from countershaft and reverse idler shaft.
3. Unfasten extension housing and turn it counterclockwise to permit removal of countershaft.
4. Drive countershaft toward rear of case until shaft just clears hole in front of case. Push countershaft out of rear of case, allowing cluster gear assembly to lie in bottom of case.
5. Extension housing and mainshaft assembly can now be removed from the case. Some of the mainshaft pilot bearing rollers may fall to the bottom of the case.
6. To disassemble the mainshaft, remove the snap ring from the front of the shaft and strip the shaft of its parts. The synchronizer may be disassembled by sliding the clutch sleeve off the hub and removing the three inserts and insert rings.
7. Remove clutch gear through front of case.
8. Drive out reverse idler shaft and lift out gear.
9. Remove countershaft cluster gear assembly.

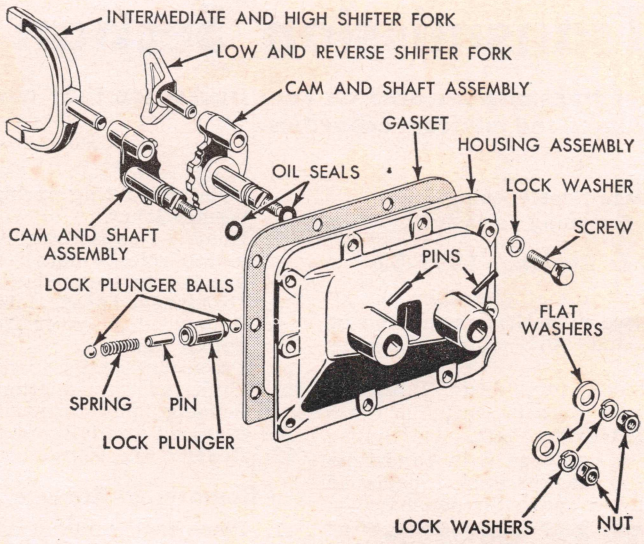

Fig. 2 Gearshift housing for Fig. 1 transmission

Assembly Notes

Reverse the disassembly procedure to assemble the transmission, referring to Fig. 1. It is not necessary to disassemble the gearshaft housing to determine the condition of the parts. Check the condition of the shift levers and forks. If there is any binding or possibility of shifting into two gears at once when the lever is operated, disassemble and assemble the housing, referring to Fig. 2.

If the clutch shaft bearing does not have a built-in shield, a baffle is used at the rear of the bearing. The baffle must be installed with the dished side away from the bearing so that the baffle does not rub the outer race of the bearing.

When assembling the cluster gear, first center the bearing spacer in the gear. Then install a flat washer, 25 rollers and a second flat washer at each end of the cluster gear. Place the thrust washers at each end of the gear with the flat side next to the gear. To obtain the specified end play of .004″ to .018″, change the thrust washers as required.

Reverse idler gear is installed with the chamfered teeth ends toward the front.

When installing the clutch shaft bearing retainer, be sure to align the oil drain in the retainer with the hole in the case.

When installing the mainshaft and bearing into the extension housing, install the thickest snap ring that will fit. Snap rings are available in four thicknesses, ranging from .086″ to .097″. When mainshaft and extension housing is installed in case, shaft end play must not exceed .003″.

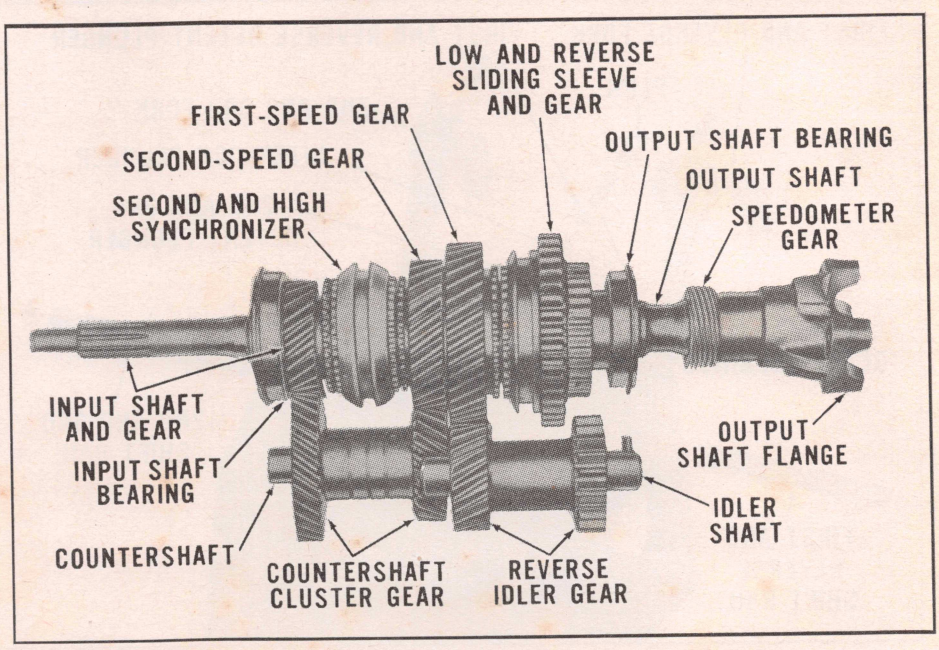

Fig. 3 Three speed transmission gear train. 1963

3 SPEED TRANS., 1963

1. To disassemble the transmission, Fig. 3, remove bottom drain plug and drain lubricant.
2. Remove parts shown in Fig. 4.
3. Remove filler plug from right side of case and drive out the countershaft retainer, Fig. 5. Lower countershaft assembly to bottom of case.
4. Lift input shaft gear and shaft from front of case, being careful not to drop needle bearings from bore of input shaft.
5. Slide speedometer drive gear from mainshaft and remove the drive gear lock ball from shaft.
6. Use a suitable puller to remove mainshaft rear bearing.
7. Place both shift levers in neutral position.
8. Remove plug that retains detent plunger and spring in case and remove these parts, Fig. 6.
9. Remove shift fork components.
10. Lift mainshaft assembly out through top of case.
11. Working through front bearing opening, drive reverse idler gear shaft out through rear of case with a drift. Then lift reverse idler gear and two thrust washers from case.
12. Lift countershaft and thrust washers from case, using a dummy shaft to hold needle bearings in place.
13. Remove shift levers and shafts, Fig. 7.
14. Remove snap ring from front end of mainshaft and slide synchronizer and second speed gear off shaft.
15. Remove snap ring and thrust washer from mainshaft and slide first speed gear and blocking ring off shaft.
16. Remove the next snap ring and slide reverse gear and sleeve from shaft.
17. Remove dummy shaft, needle bearings and two retainer washers from countershaft gear.
18. Disassemble synchronizers.
19. Assemble the transmission in the reverse order of disassembly, referring to Figs. 4 to 12. Countergear and reverse idler gear end play should be .004 to .018″. Replace thrust washers as required to obtain this end play.

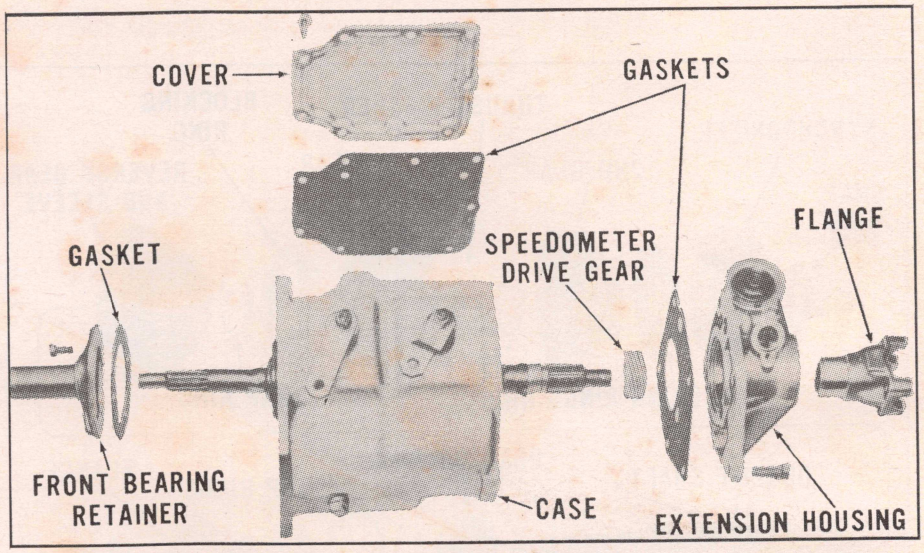

Fig. 4 Removal of external parts

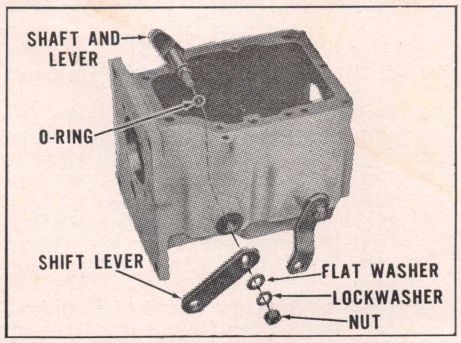

Fig. 7 Shift levers and shafts

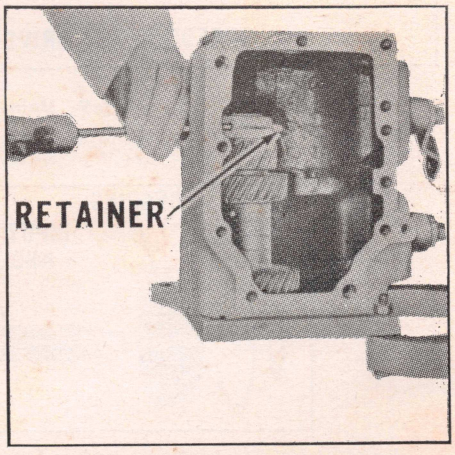

Fig. 5 Driving out countershaft retainer

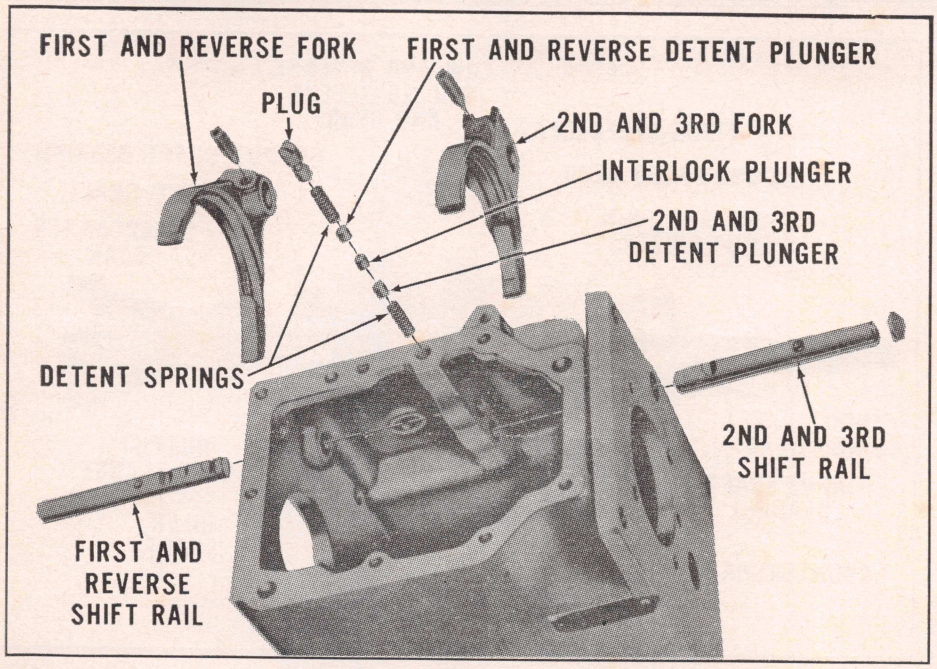

Fig. 6 Shift fork components

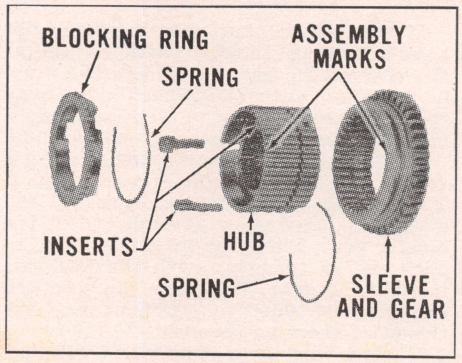

Fig. 10 Front synchronizer disassembled

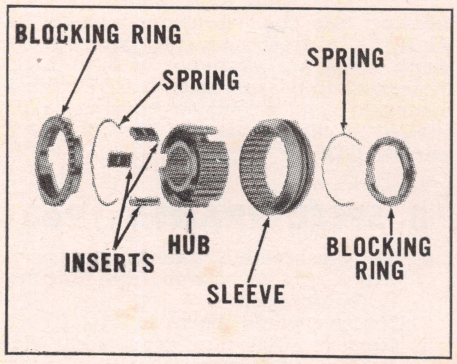

Fig. 11 Rear synchronizer disassembled

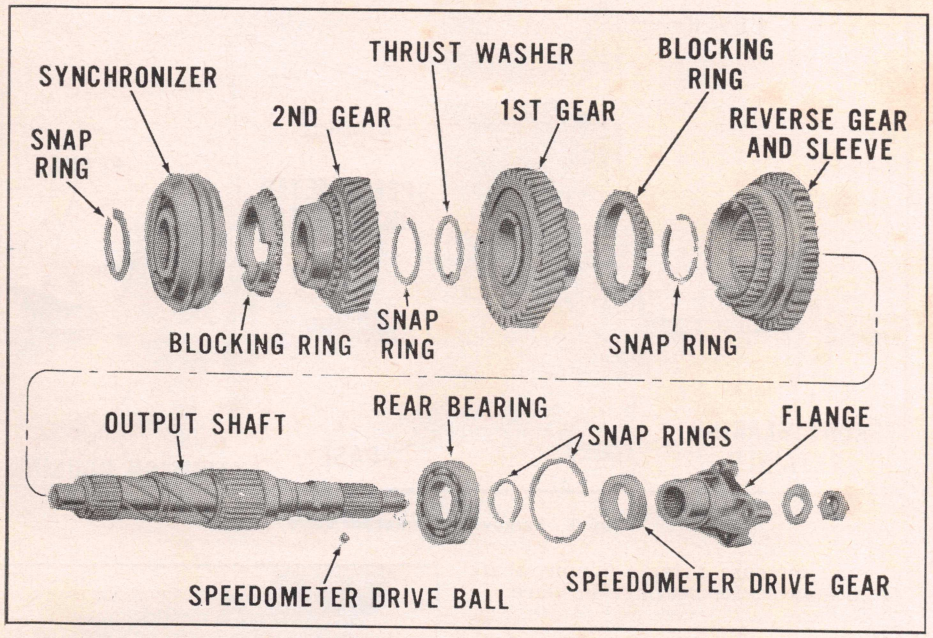

Fig. 9 Mainshaft disassembled

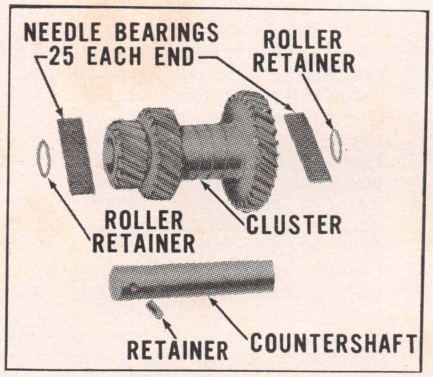

Fig. 12 Countershaft disassembled

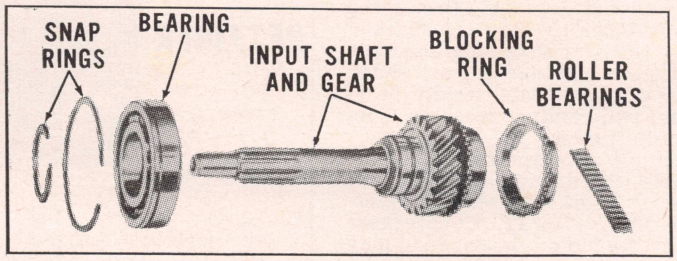

Fig. 8 Input shaft disassembled

TILT CAB SHIFT LINKAGE

1957 Adjustment

1. Referring to Fig. 13, shift transmission into neutral.
2. Remove split pin that retains rear universal joint to the finger socket shaft in the rear cross shaft housing.
3. Loosen lock nut at front of front control rod universal joint.
4. Hold gearshift front cross shaft so that the cross shaft arm and control rod crank arm are in a vertical position.
5. Rotate rear control rod front universal joint on its thread until the pin hole in the rear universal joint lines

up with the hole in the finger socket shaft. Install the split pin. Tighten lock nut at rear control rod front universal joint.
6. Check adjustment by shifting through all gears.

1958-63 Adjustment

1. Shift transmission into neutral and tilt the cab.
2. Loosen both turnbuckle bolts, Fig. 14.
3. Rotate turnbuckle until front cross shaft arm is vertical.
4. Using a drift or a screwdriver, turn rear U-joint counterclockwise (viewed from rear) until rear cross shaft finger bottoms the plunger (except on Spicer units) in the transmission shift housing. On a Spicer transmission, rotate U-joint until the finger bottoms firmly in the gate.
5. Holding the finger in position, rotate the shift control rear rod until there is the specified distance (see below) between inner surface of cross shaft lever and right-hand end of cross shaft tube.
6. Tighten turnbuckle bolts.
7. Lower cab and check operation of gearshift lever in all positions. If lever hits either the instrument panel or the seat, readjust turnbuckle repeating Steps 4 through 7, except that dimensions in table below may be reduced. *In any case, the dimension should not be more than ⅛".*

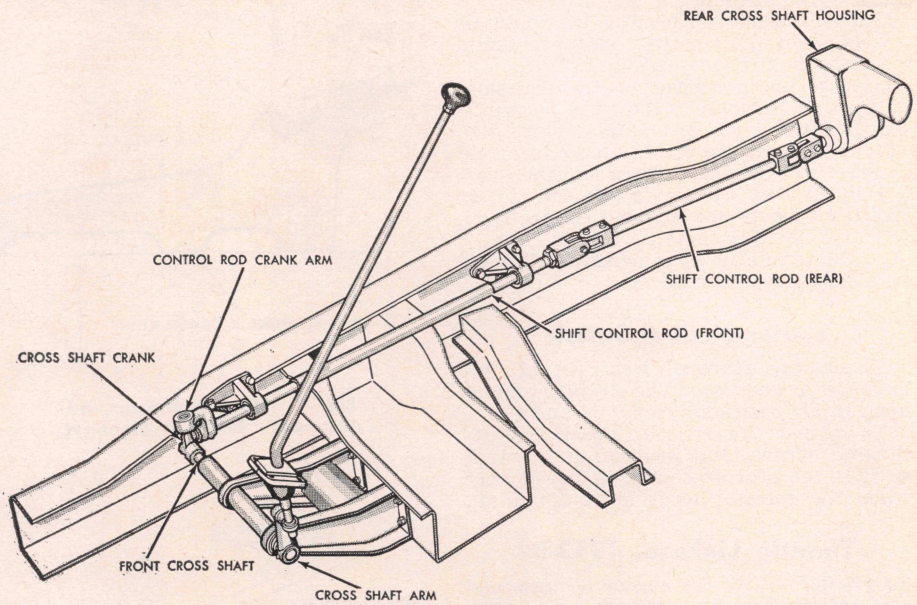

Fig. 13 Tilt cab shift linkage. 1957

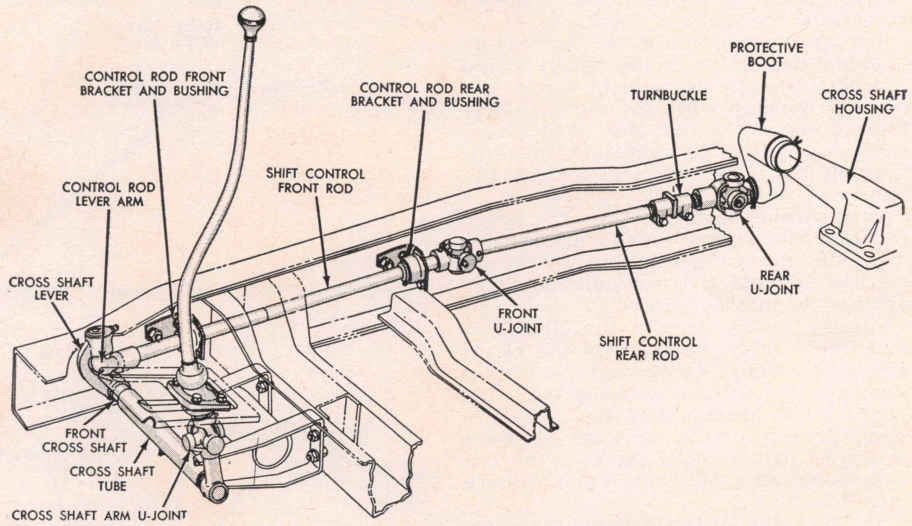

Fig. 14 Tilt cab shift linkage. 1958-63

Automatic Transmission Section

For Allison Transmatic, Fordomatic and Cruiseomatic transmissions, see the "name" chapters for service procedures

FORDOMATIC & CRUISEOMATIC

Engine Idling Speed

1. Apply parking brake and place selector lever in N.
2. Run engine at normal idle speed. If transmission fluid is cold, run engine at fast idle speed until fluid warms up. When fluid is warm, slow engine down to normal idle speed.
3. Connect a tachometer to engine.
4. Adjust engine idle speed to 450 rpm with selector lever at Dr, D2 or D1.
5. It may be necessary to readjust the idle speed at N position to obtain the correct speed at the Drive positions. *If the anti-stall dashpot holds the throttle open and prevents the idle speed from being correctly adjusted, adjust the dashpot clearance before setting idle speed.*

Anti-Stall Dashpot

After the engine idle speed has been correctly adjusted, stop the engine and adjust the anti-stall dashpot clearance.

1. Loosen dashpot lock nut.
2. With throttle in the hot idle position, bottom the dashpot plunger and measure the clearance between the bottomed plunger and the throttle shaft lever. Clearance should be .045" to .064".
3. To adjust clearance, turn the dashpot or dashpot adjusting nut and tighten the lock nut after the proper clearance is obtained.

Manual Linkage

1. With engine stopped, disconnect upper end of manual shift rod and

clevis from selector lever.
2. Position selector lever so that pointer is down against the steering column stop in the Dr position.
3. Shift manual lever on transmission to the Dr detent (2nd from bottom).
4. Rotate clevis on manual shift rod until clevis pin can easily be inserted in lever insulator. Then lengthen rod by turning the clevis two full turns.
5. Lock clevis in place and connect rod and clevis to lever.
6. Check pointer alignment for all positions of selector lever.

Starter Neutral Switch

Check the starter circuit in all selector lever positions. The circuit must be open in all positions except N and P.

To adjust the switch, loosen the attaching screws and position the switch so that the starter circuit is closed only when the selector lever is at N and P.

Throttle Linkage, 1953-54

8-Cylinder—With the engine idling speed and anti-stall dashpot properly adjusted, place the linkage adjustment tool, Fig. 1, on the end of the carburetor-to-Z-bar rod so the tool rests on a clean, finished surface of the cylinder block.

Loosen the lock nut on the carburetor-to-Z-bar rod and turn the barrel of the rod until the idle adjustment screw just touches the stop when the rod is held at the bottom of the tool slot (2.04" from surface of block to centerline of rod). Tighten the lock nut and remove the tool.

Remove the clevis pin from the upper end of the Z-bar-to-transmission rod and pull upward gently but firmly on the rod to hold the transmission lever against its internal stop.

Adjust the clevis until the clevis pin will freely enter the holes in the clevis and Z-bar. Lengthen the rod by turning the clevis 2½ turns counterclockwise.

Check the operation of the transmission. And if clutch or band slippage occurs at part throttle increase the rod adjustment to 3 full turns but not more than 3½.

Measure the distance from the floor pan (not floor mat) to the pivot point under the accelerator pedal, Fig. 2. If the distance is not correct as shown, adjust the accelerator cross shaft-to-carburetor rod until the correct pedal height is obtained.

If the accelerator pedal stop bolt prevents kickdown action, loosen the lock nut and adjust the stop bolt height to obtain the kickdown.

6-Cylinder—With the engine idling speed and anti-stall dashpot properly adjusted, remove the pin from the clevis of the transmission-to-Z-bar rod and turn the clevis until the holes in the clevis and mating lever are aligned. Turn the clevis 2½ turns counterclockwise and install the clevis pin.

If clutch or band slippage occurs at part throttle after adjustment has been made, increase the rod adjustment to 3 turns but do not exceed 3½.

If the distance between the floor pan to the pivot point under the accelerator is not as shown in Fig. 2, adjust the accelerator cross shaft-to-carburetor rod as required to obtain the correct pedal height.

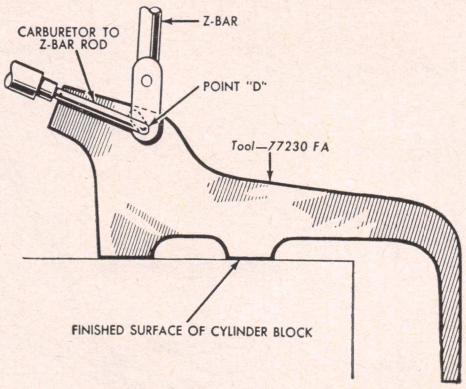

Fig. 1 Throttle linkage adjustment 1953-54 eight-cyl.

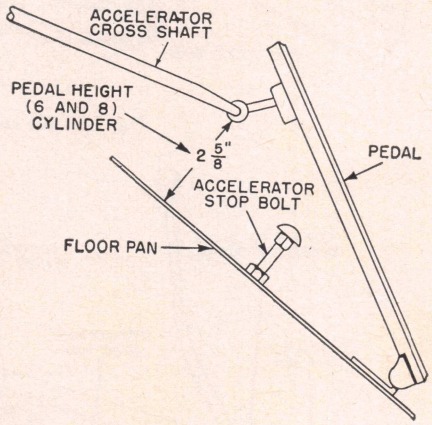

Fig. 2 Pedal height adjustment. 1953-54

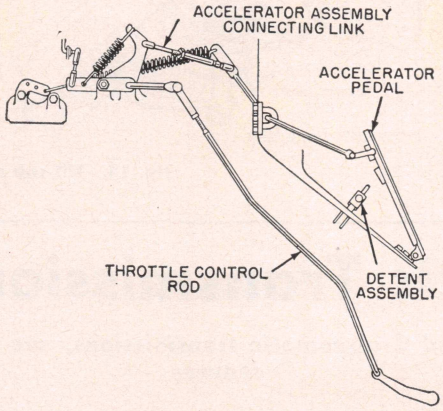

Fig. 3 Throttle linkage. 1955 six-cyl.

Throttle Linkage, 1955

6-Cylinder—Remove the clevis pin from the upper end of the throttle control rod, Fig. 3. Pull upward on the rod to hold the transmission lever against its internal stop.

Rotate the throttle rod clevis until the clevis pin can freely enter the holes in the clevis and accelerator shaft. Then lengthen the rod by rotating the clevis 3 turns and install the clevis.

Adjust the accelerator pedal height so that the pedal just touches the detent stem when the carburetor lever hits its wide-open stop, Fig. 4.

After the adjustment is completed, road test the truck and if band or clutch slippage is evident, increase the length of the rod to 3½ turns but do not exceed 4 turns.

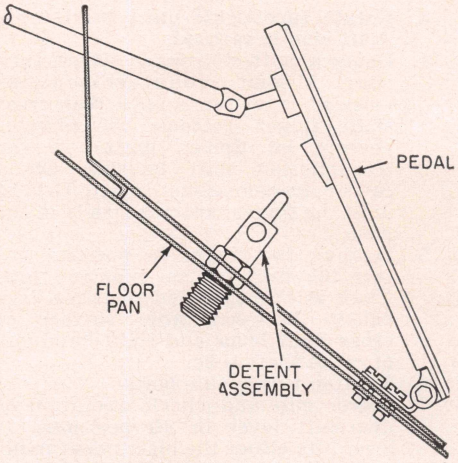

Fig. 4 Accelerator pedal detent. 1955

8-Cylinder—Position the throttle linkage adjustment tool on the clean surface of the accelerator assembly mounting bracket. The lower pin of the tool should freely enter the hole in the accelerator lever, Fig. 5. If the pin does not enter the hole in the lever, rotate the carburetor connecting link barrel until it enters with the carburetor idle adjustment screw against its stop. Tighten the lock nut.

Remove the clevis pin from the upper end of the throttle control rod. Pull upward on the rod to hold the transmission lever against its internal stop.

Rotate the throttle control rod clevis until the clevis pin freely enters the holes in the clevis and accelerator lever. Then lengthen the rod 3 turns.

After the adjustment, road test the truck and if band or clutch slippage is evident, increase the throttle rod length to 3½ turns but do not exceed 4 turns.

Check the alignment of the accelerator cross shaft-to-accelerator lever connecting link. The link must be parallel with the centerline of the engine. If not, turn the adjustment screw until the correct alignment is obtained.

Adjust the accelerator pedal height so the pedal just touches the detent stem when the carburetor lever hits its wide-open stop, Fig. 4.

Throttle Linkage, 1956-57

6 Cylinder—To adjust, remove the clevis pin from the upper end of the throttle control rod, Figs. 6 and 7. Pull upward firmly but gently on the throttle

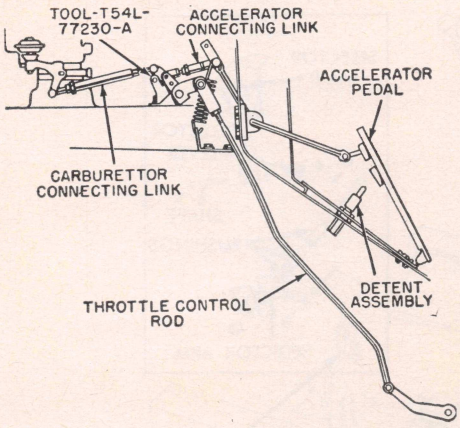

Fig. 5 Throttle linkage. 1955 eight-cyl.

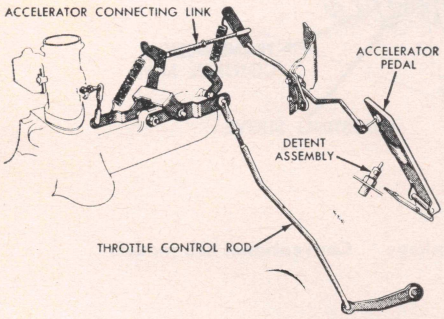

Fig. 6 Throttle linkage. 1956-57 Six except Parcel Delivery

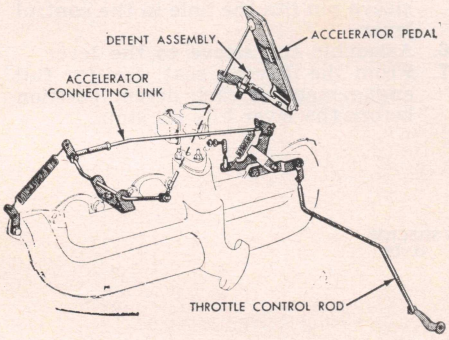

Fig. 7 Throttle linkage. 1956-57 Six Parcel Delivery

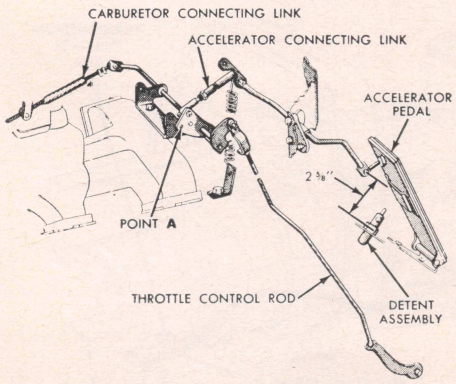

Fig. 8 Throttle linkage. 1956-57 V8s

control rod to hold the transmission lever against its internal stop.

Rotate the throttle rod clevis until the clevis pin enters the holes in the clevis and accelerator assembly shaft. Lengthen the throttle control rod by rotating the clevis 2½ turns, and assemble the throttle rod to the accelerator shaft.

Adjust the accelerator connecting link to obtain a pedal height of 2⅝″ on 1956 models and 2¾″ on 1957 models. The pedal just touches the detent stem when the carburetor lever hits its wide-open stop.

Check the throttle linkage and relieve any binding conditions. Road test the truck. If band or clutch slippage is evident, increase the rod length to 3 turns of the clevis, but do not exceed 3½ turns.

8 Cylinder—Disconnect throttle rod from accelerator assembly, Fig. 8, and insert a ¼″ drill rod through the holes at point "A". Adjust the length of the carburetor connecting link to close the carburetor against its stop. Adjust the accelerator assembly connecting link to obtain a pedal height of 2⅝″ on 1956 models and 2¾″ on 1957. The pedal should just touch the detent when the carburetor lever hits its wide-open stop. Remove the drill rod and check the alignment at "A". The pin must re-enter freely.

Remove the drill rod and adjust the throttle control rod. Pull upward gently but firmly on the rod to hold the transmission lever against its internal stop.

Rotate the clevis until it freely fits the pin on the accelerator lever. Lengthen the throttle control rod by rotating the clevis 2½ turns. Assemble the parts and tighten the lock nut.

Road test the truck and if band or clutch slippage is evident, increase the length of the throttle control rod to 3 turns, but do not exceed 3½ turns.

Throttle Linkage, 1958-63 Six-Cyl.

1. With engine stopped, loosen clevis lock nut on upper end of throttle rod.
2. Remove clevis and pull throttle rod upward to hold throttle lever against the main control stop, Fig. 9.
3. Turn the throttle rod clevis until clevis pin enters hole in lever. Lengthen throttle rod 2½ turns to obtain an approximate setting.
4. Connect throttle rod to accelerator shaft and temporarily secure it with cotter pin.
5. Adjust accelerator pedal height by turning threaded trunnion on accelerator connecting link until the point where linkage connects to pedal is 2¾″ from floor mat.

Throttle Linkage, 1958-63 V8

1. With engine stopped, disconnect throttle rod from accelerator, Figs. 10 or 11.
2. Insert ¼″ drill rod through gauging holes shown in Fig. 10.
3. Adjust length of carburetor connecting link so that carburetor throttle is at idle position.
4. Adjust accelerator connecting link to obtain a pedal height of 2¾″.
5. Remove gauge pin and check alignment of holes. Pin must enter freely.

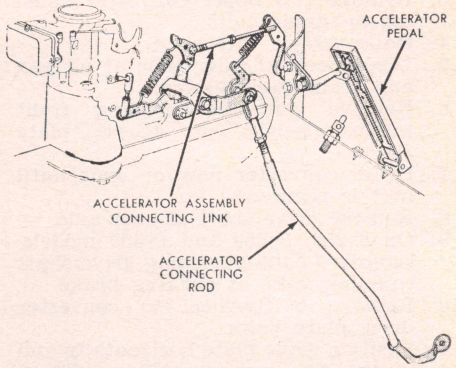

Fig. 9 Throttle linkage. 1958-63 Six-cyl. (except P Series)

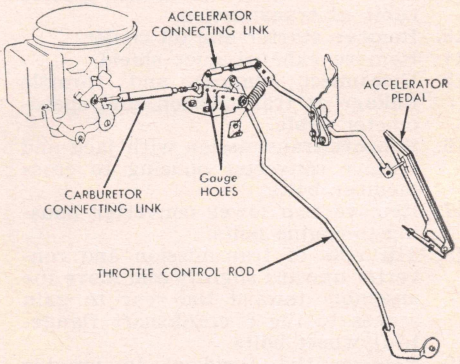

Fig. 10 Throttle linkage. 1958-63 V8 (except P series)

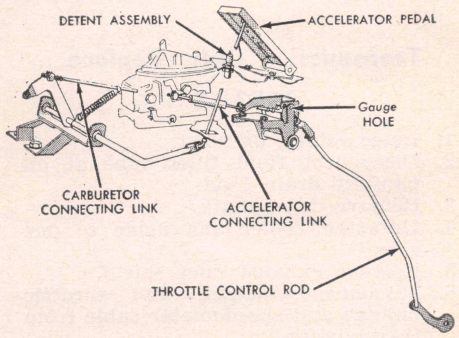

Fig. 11 Throttle linkage. 1958-63 V8 P Series trucks

6. Remove gauge pin and adjust throttle control rod. Pull upward gently but firmly on the rod to hold transmission lever against its internal stop.
7. Rotate clevis until it freely fits pin on accelerator lever. Lengthen throttle rod by rotating clevis 3 turns counterclockwise.
8. Connect throttle rod to accelerator lever.

Transmission & Converter, Replace 1953-58

1. Drain radiator, fold back front of floor mat and remove covers from converter housing bolt access holes.
2. Pull off cooler hoses.

3. Remove two upper converter housing-to-engine bolts.
4. Raise vehicle with hoist.
5. Disconnect oil filler tube at oil pan and drain transmission.
6. Remove converter housing front plates (8-cyl.) or access plate (6-cyl.).
7. Drain converter now or wait until unit is removed.
8. Remove drive shaft at rear axle.
9. On F-250, F-350 and P-350 models, remove 4 bolts attaching drive shaft coupling yoke at parking brake.
10. Remove 6 flywheel - to - converter drive plate bolts.
11. Position drive plate horizontally and wedge the converter from sliding out of the housing when the transmission is removed.
12. Disconnect starter cable at starter and transmission-to-frame ground cable at transmission.
13. Remove starter and oil cooler.
14. Remove exhaust duct shield.
15. Disconnect manual and throttle linkage at transmission, and speedometer cable.
16. Support transmission with jack and remove converter housing to cross member bolts.
17. Remove two lower converter housing-to-engine bolts.
18. Tilt rear of transmission and converter upward slightly and move the assembly toward the rear to gain access to the 6 crankshaft flange-to-flywheel bolts.
19. Remove the flywheel to provide clearance and lower the transmission and converter assembly.
20. To install, reverse the foregoing procedure.

Transmission Only, Replace

1953-58

1. Raise vehicle on hoist.
2. Disconnect fluid filler tube at oil pan and drain fluid.
3. Remove drive shaft.
4. Unfasten cooler and move to one side.
5. Remove exhaust duct shield.
6. Disconnect manual and throttle linkage and speedometer cable from transmission.
7. Support transmission with jack and unfasten transmission from converter.
8. Remove oil cooler front support bracket.
9. Tilt rear of transmission slightly upward and move to the rear until clear of turbine shaft. Then lower assembly and remove from vehicle.
10. Reverse the foregoing to install.

TRANSMATIC DRIVE

1958-63

For a detailed description on the operation and servicing of this transmission see the *Allison Chapter* elsewhere in this manual. The following material deals with linkage adjustments and removal of the unit from the truck.

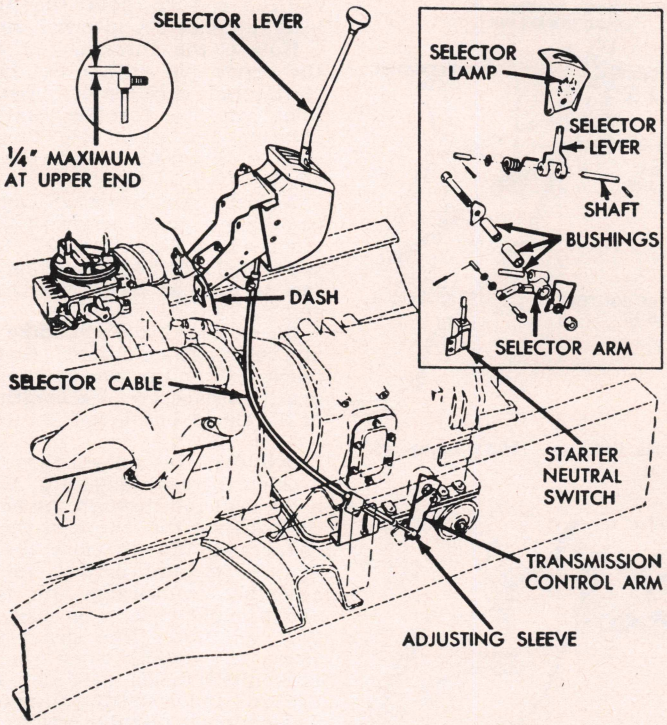

Fig. 12. Transmatic range selector linkage. Conventional cab models

Range Selector Linkage, Adjust

1. Place the selector lever at R.
2. Check the distance that the control cable adjusting threads extend above the sleeve assembled to the range selector arm, Figs. 12 and 13.
3. At the transmission, disconnect the range selector cable from the transmission control lever.
4. Shift the transmission control lever to R (all the way forward and upward).
5. Push the control cable up until the selector lever hits the R stop. Adjust the threaded sleeve so that the sleeve pin fits the hole in the control lever.
6. Assemble the sleeve to the lever.
7. From the driver's seat, feel for full engagement at each detent position before the lever hits its stop.

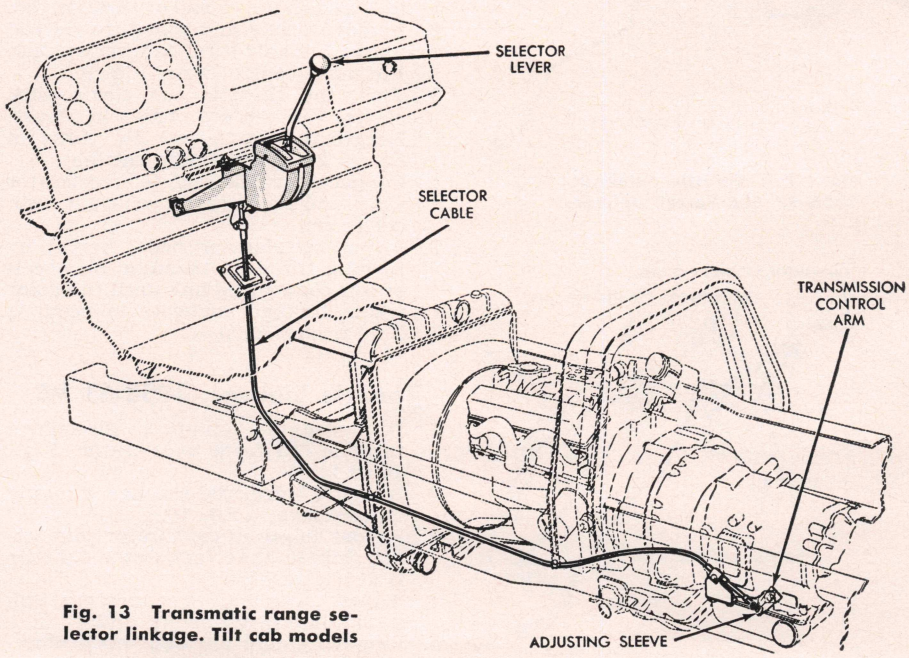

Fig. 13 Transmatic range selector linkage. Tilt cab models

Neutral Safety Switch, Adjust

Check the starter circuit at all selector lever positions. The circuit must be open at all positions except Neutral. To adjust, loosen the switch attaching screws. Position the switch so that the starter circuit is closed when the selector lever is in Neutral.

Throttle Linkage, Adjust

Conventional Cab Models—

1. With engine at normal operating temperature, check engine idle speed which should be 475-500 rpm with selector lever in Neutral.
2. Stop engine. Then disconnect throttle control rod, Fig. 14, at shaft and bracket assembly.
3. Lock linkage in full throttle position by inserting a ¼″ drill or rod into the shaft and bracket.
4. With gauge in place, adjust carburetor connecting link so that carburetor throttle lever is against its wide open stop.
5. With gauge still in place, pull throttle control rod upward until the transmission throttle lever is against its stop inside the transmission. *The throttle control rod should be assembled to the outer hole of the transmission throttle lever.*
6. While holding the throttle control rod firmly against its stop, adjust the throttle control rod clevis so that it just fits the pin on the shaft and bracket assembly.
7. Lengthen the throttle control rod by rotating the clevis counterclockwise 10 turns (272 engine) or 9 turns (302 and 322 engines). Then assemble the clevis to the shaft pin.
8. Remove the gauge rod or drill. With linkage and carburetor in the hot idle position, move screw up or down in bracket slot to provide .020″ clearance between bell crank and screw head. Tighten screw.
9. Adjust accelerator pedal connecting link to obtain proper pedal height.
10. Check linkage for free movement in all positions.

Tilt Cab Models—

Adjustment procedures for these models are the same as those for conventional models except for pedal heights, Fig. 15.

Hydraulic Retarder Linkage, Adjust

Conventional Cab Models—

1. Check hydraulic retarder pedal stop bolt height against dimension shown in Fig. 16. Adjust as required.
2. Disconnect hydraulic retarder control rod at transmission end. Pull retarder lever toward the rear of the transmission until retarder valve is heard and felt to bottom in the retarder casting.
3. Pull the control rod down until the pedal contacts its stop bolt.
4. Adjust control rod threaded sleeve until pin just fits in lever hole.
5. Lengthen control rod by rotating sleeve counterclockwise to provide ⅛″ clearance between pedal and stop at full retarder application.
6. Assemble control rod to lever and tighten lock nut.
7. Check adjustment by depressing pedal against stop bolt. Just before pedal hits stop bolt, retarder valve should be felt to bottom in its body. Check for full release and readjust if necessary.

Tilt Cab Models—

1. Adjust pedal retarder stop bolt height as shown in Fig. 17.
2. Disconnect retarder control cable at transmission.
3. Pull retarder lever toward rear of transmission until retarder valve is heard and felt to bottom in its body.
4. Pull retarder cable toward transmission until pedal is against its stop bolt.
5. With retarder valve bottomed (all the way to rear) and retarder pedal against its stop, adjust cable adjusting sleeve until sleeve pin just fits hole in lever.
6. Lengthen cable by turning sleeve counterclockwise to provide about ⅛″ clearance between pedal and stop at full retarder application.
7. Assemble cable to lever.

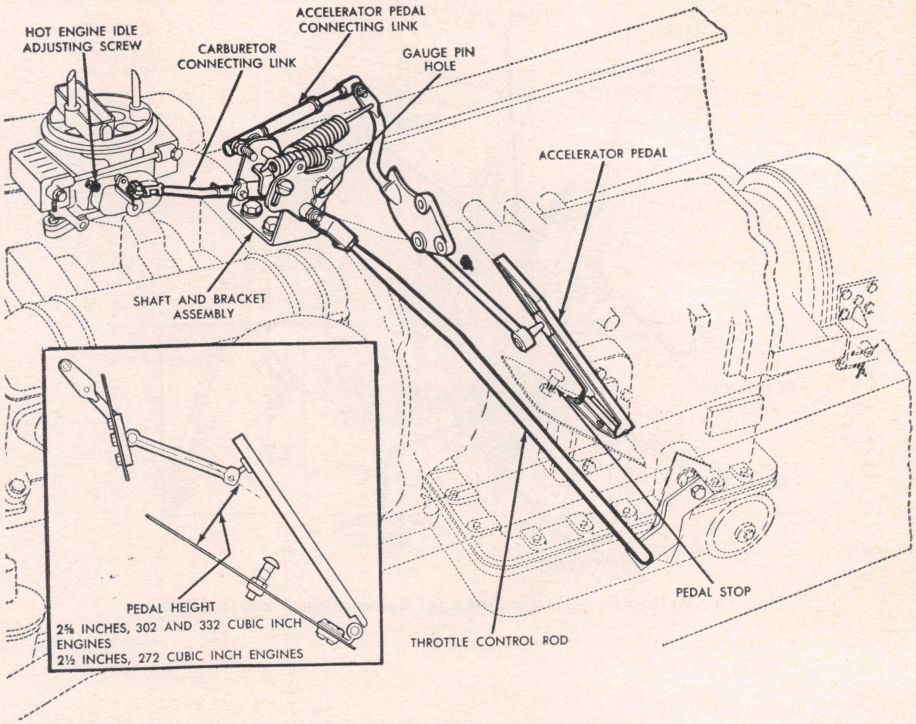

Fig. 14 Transmatic throttle linkage. Conventional cab models with 302 and 332 engines

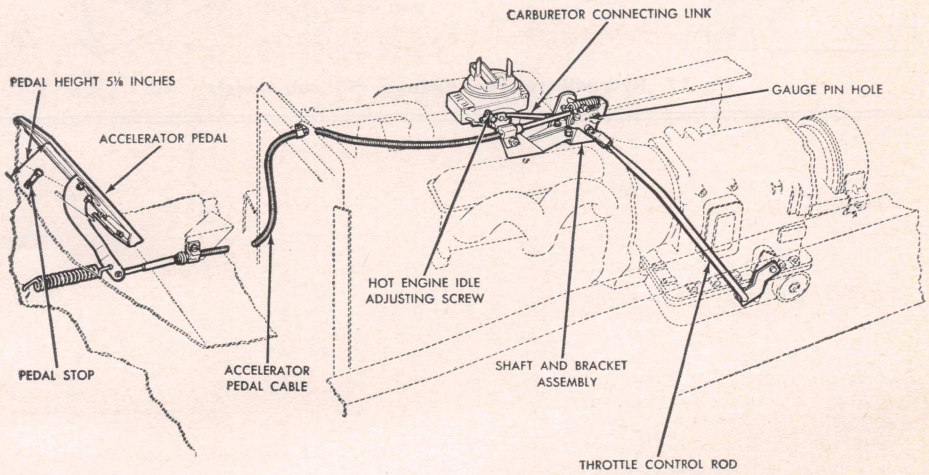

Fig. 15 Transmatic throttle linkage. Tilt cab models with 302 and 332 engines

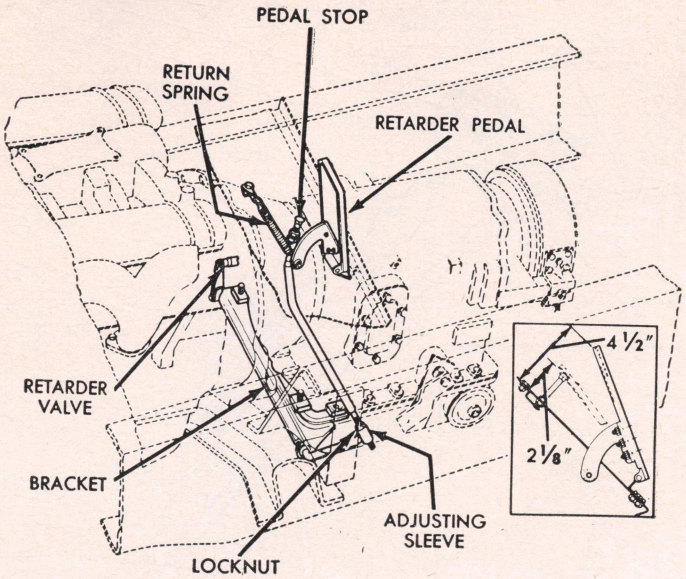

Fig. 16 Hydraulic retarder linkage. Conventional cab models

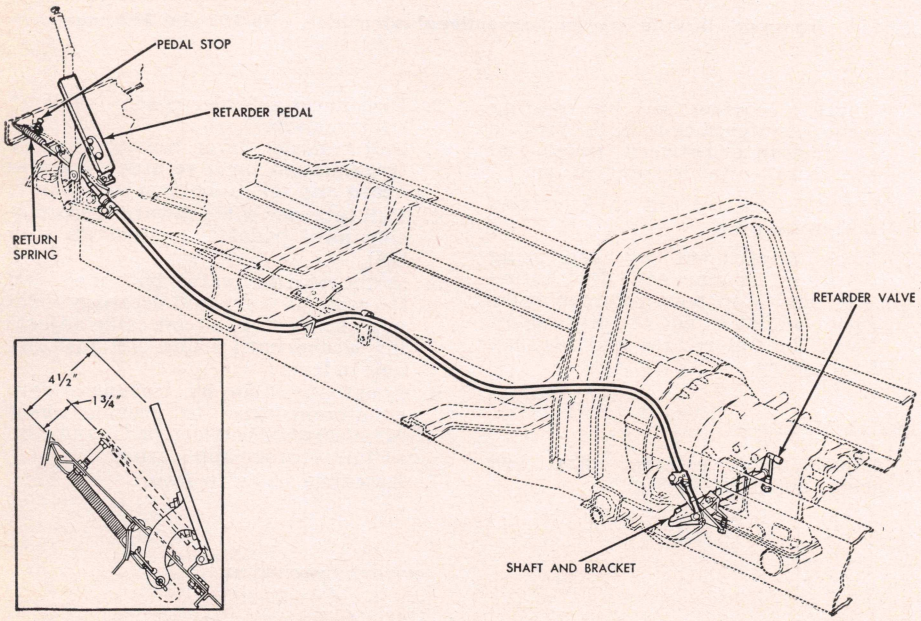

Fig. 17 Hydraulic retarder linkage. Tilt cab models

8. Check adjustment by depressing pedal against its stop bolt. Retarder valve should be felt to bottom just before pedal hits the stop bolt.

Transmission, Remove and Replace

1. Loosen acorn nut on filter cover and drain transmission. When fluid stops flowing tighten filter cover nut.
2. On one-piece drive shaft models, disconnect shaft from pinion flange and from yoke at parking brake drum. *Do not remove the bolt that retains the flange on the transmission output flange.*
3. On two-piece drive shaft models, disconnect the coupling shaft from the yoke at the parking brake drum, then remove the center support bearing bracket. Move the forward end of the drive shaft out of the way.
4. Disconnect speedometer cable.
5. Remove fluid filler tube and breather hose.
6. Disconnect cable and TV rod from levers at transmission. Remove cable clamp bracket from housing.
7. Disconnect retarder linkage and remove cross shaft.
8. Disconnect parking brake linkage.
9. Remove fluid temperature warning light switch.
10. Disconnect oil cooler lines from fittings on retarder valve body, then remove forward fitting. Plug lines and valve body openings.
11. Remove flywheel housing dust shield.
12. Unfasten converter pump cover from flywheel (6 nuts).
13. Unfasten converter housing from frame cross member (2 bolts).
14. Remove nut from top of transmission rear support and cross member.
15. Raise rear of engine to take weight off cross member.
16. Support transmission with suitable jack.
17. Remove transmission rear support cross member.
18. Unfasten converter housing from flywheel housing.
19. Move converter and transmission away from engine until converter housing clears cross member, then lower the unit. If necessary, raise floor pan slightly to permit converter housing to clear cross member.
20. Reverse the foregoing procedure to install the transmission and check the adjustment of the linkage as outlined previously.

Rear Axle Section

For Eaton and Timken (Rockwell) driving axles used on Ford Trucks, see the "name" chapter for service procedures and lubricant capacities

SPICER INTEGRAL HOUSING TYPE AXLE

This rear axle, Fig. 1, is of the semi-floating, hotchkiss drive type. The drive pinion is the over-hung type, mounted on pre-loaded taper roller bearings. Sealing of the pinion shaft is accomplished at the front end by a spring-loaded leather seal bearing on the companion flange, which is splined and secured to the pinion shaft by a nut.

Axle Shaft, Remove

1. Raise vehicle and place stand jacks under rear axle housing.
2. Remove wheel and brake drum.
3. Remove four nuts from bearing retainer bolts on inside of axle flange.
4. Attach axle shaft puller, Fig. 2, and remove axle shaft and bearing assembly.
5. Install bolt and nut to hold brake backing plate on axle housing.

Bearing or Oil Seal, Replace

1. With a chisel, nick soft ring next to bearing and remove ring. The ring need not be split, only nicked deep enough to allow removal.
2. Install a suitable press plate between axle flange and bearing and press bearing from shaft.
3. To replace oil seal, pry it out of housing with screwdriver.
4. Install new seal.
5. Install new bearing, pressing it on so it seats on the shaft against shoulder. Bearing retainer must be on axle shaft before bearing is installed.
6. Install new bearing retainer ring, being sure ring seats against bearing.

Axle Shaft, Install

1. Insert five new bolts and force heads down to flange on new axle.
2. Peen end of shoulder on bolts into countersink around bolt holes in flange.
3. Install new bearing as outlined above.
4. Remove temporary nut and bolt holding brake backing plate in place.
5. Install new retainer gasket.
6. Install axle shaft in housing. Outer race of bearing must seat against shoulder in axle housing.
7. Install nuts and washers on bearing retainer bolts and tighten securely.
8. Install brake drum and wheel.

Rear Axle Assembly, Replace

Inasmuch as the axle tubes are pressed into the differential carrier to form a one-piece housing, the rear axle assembly must be removed from the chassis when it becomes necessary to overhaul the unit.

1. Raise vehicle from floor and support with stand jacks under frame side rails.
2. Remove rear wheels.
3. Split rear universal joint.
4. Disconnect parking brake cable from equalizer rod and unfasten brake cable brackets from frame cross member.
5. Disconnect hydraulic brake line connection at rear axle housing.
6. Loosen and move shock absorbers out of the way.
7. While supporting axle housing with hydraulic jack, remove spring clips and lower axle assembly to the floor.
8. Reverse the foregoing procedure to install the rear axle assembly, being sure to bleed the brake system when the installation is completed.

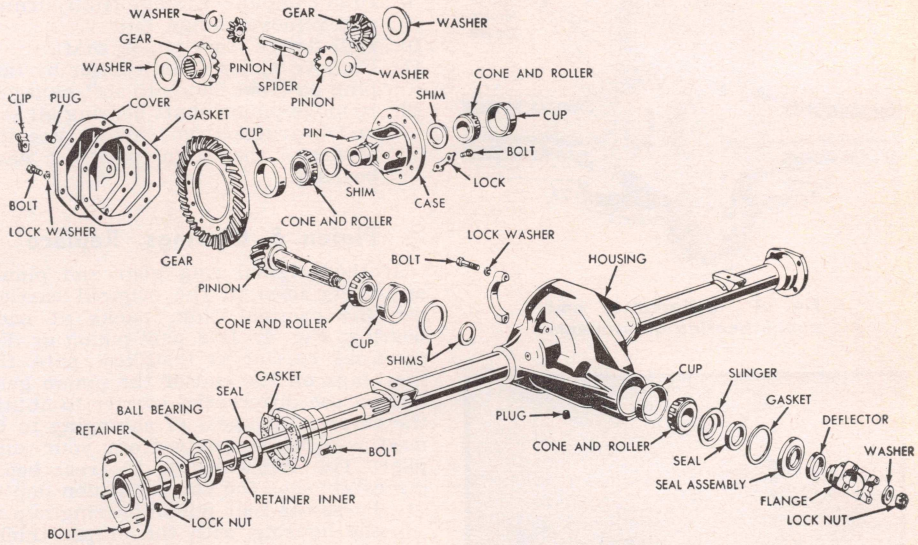

Fig. 1 Integral housing hypoid rear axle

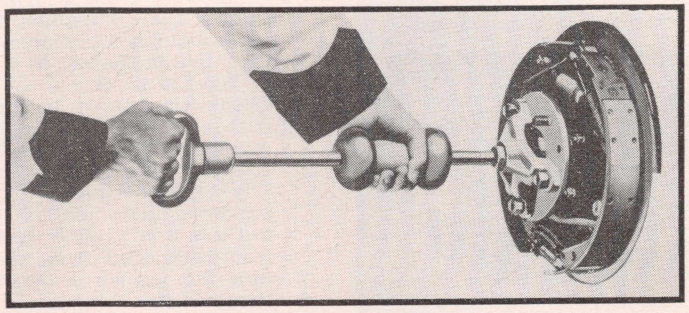

Fig. 2 Type of puller used to remove semi-floating axle shaft

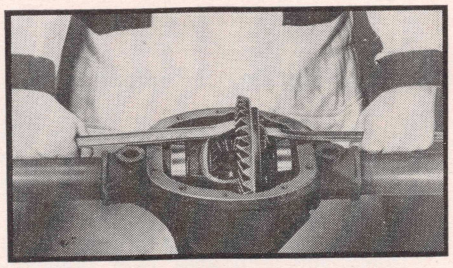

Fig. 3 Prying differential from housing

Differential Carrier, Disassemble

1. Remove axle shafts as outlined previously. Axle shafts may be pulled out only far enough to clear differential side gears.
2. Drain lubricant and rear cover.
3. Make sure differential side bearing caps and axle housing are marked, then remove the side bearing caps.

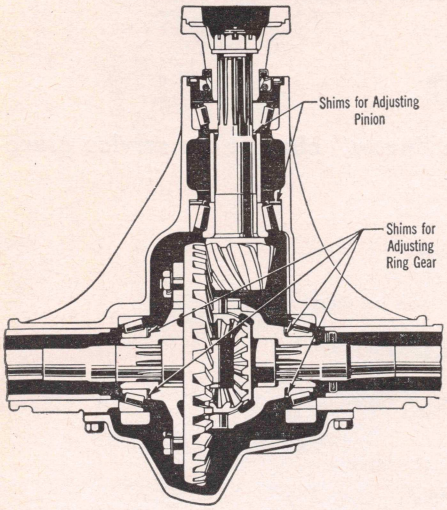

Fig. 4 Differential and pinion bearing adjustments

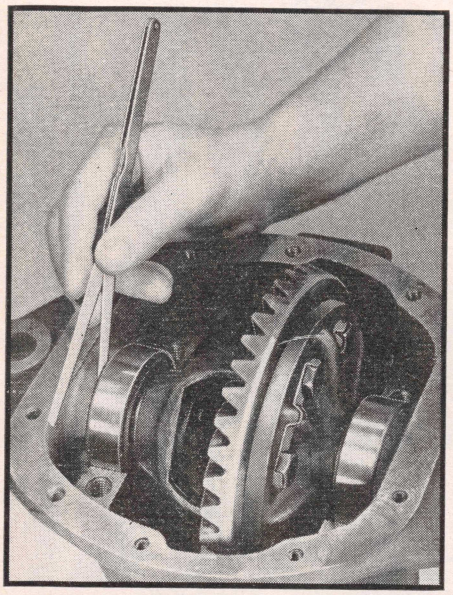

Fig. 5 Checking clearance between bearing cup and differential case

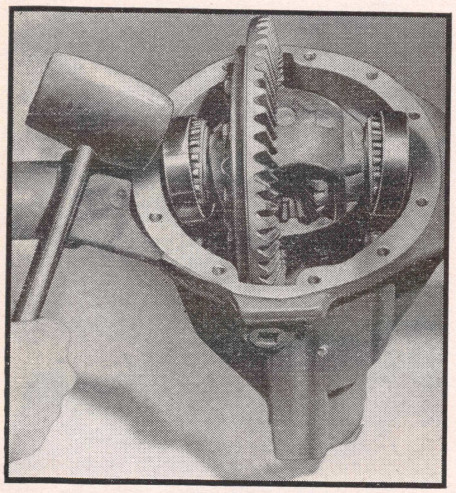

Fig. 6 Installing differential in housing

4. Pry differential from housing, Fig. 3.
5. Remove side bearing cups.
6. Pull off side bearing and adjusting shims, tagging the shims for identification on reassembly.
7. Unfasten ring gear from case.
8. Drive out differential pinion shaft pin and pull out the shaft, pinions and side gears.
9. Hold companion flange from turning and remove flange nut.
10. Pull flange from pinion shaft.
11. Remove pinion from carrier by tapping on front end with soft hammer.
12. Remove pinion shaft bearing oil seal and bearings from carrier, keeping separate the shim pack at each bearing.

Pinion & Bearings, Replace

If the original ring gear and pinion are being used in the original carrier, use the original shim packs at each bearing, Fig. 4. If a new pinion or differential carrier is installed, note the markings on the end of the pinion gear and on the differential carrier to obtain the correct thickness of shimming to be used with these parts from your supplier. The shims behind the rear bearing establishes the correct pinion depth.

1. Press the rear pinion bearing cup in the housing with the proper thickness of shims. Press the rear pinion bearing on the shaft.
2. Install the front bearing cup and shims, and front bearing.
3. Install the companion flange and, while holding the flange from turning, tighten the nut to a torque load of 200-220 lb. ft.
4. Check the pinion bearing pre-load with a spring scale and heavy cord wrapped around the companion flange. Pull on the spring scale. The torque required to rotate the pinion is 10-30 inch lbs. If not within these limits, add or remove shims from behind the front bearing to obtain the proper pre-load.
5. Remove the companion flange and install a new oil seal (well soaked). Reinstall the companion flange and tighten the nut to a torque load of 200-220 lb. ft.

Ring Gear, Replace

1. Install guide pins in every other hole in the ring gear. These pins can be made from 1½″ long capscrews with heads cut off and ends slotted.
2. Make sure back face of ring gear and face of case are free of dirt and burrs and slip gear over pilot diameter of case.
3. Install every other ring gear bolt. Draw them up evenly and snugly so ring gear face is flush with face of case.
4. Remove guide pins and install remaining bolts.

Differential Carrier, Assemble

The differential bearings are adjusted by shims, Fig. 4. These shims also establish the ring gear position with the

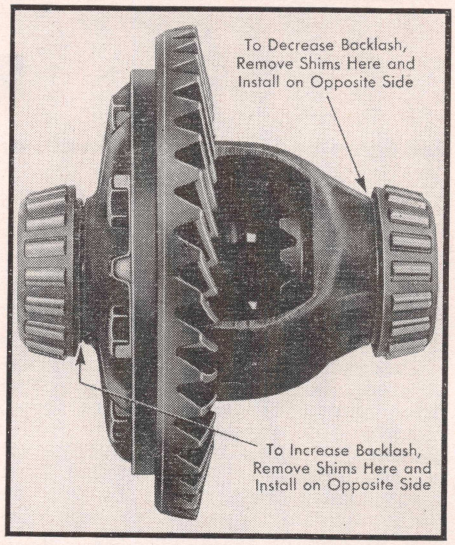

Fig. 7 Ring gear and pinion backlash adjustment

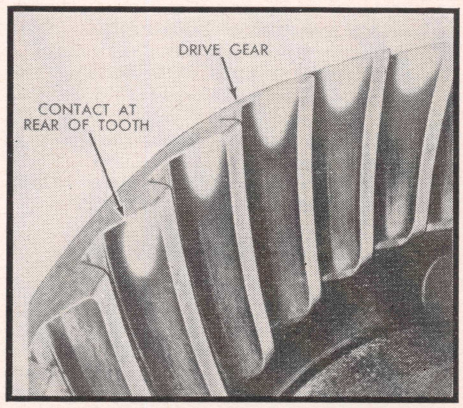

Fig. 8 Short heel contact. Move drive gear toward pinion

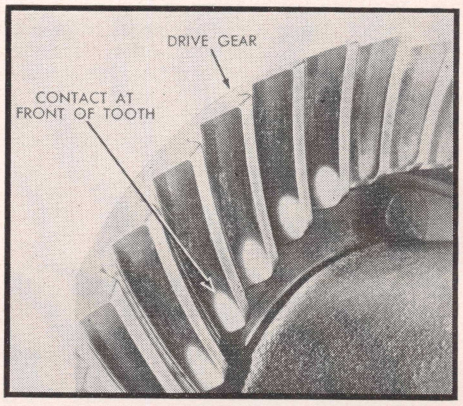

Fig. 9 Short toe contact. Move drive gear away from pinion

pinion. Therefore, backlash must be checked whenever a bearing adjustment is made.

The correct bearing adjustment is one which will provide a .015-.020″ pinch fit when the differential unit is assembled into the carrier. To make the adjustment, install the bearing cones without

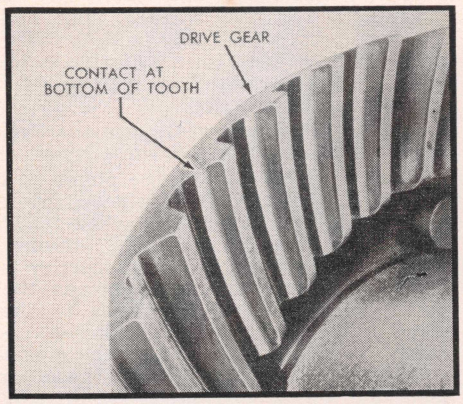

Fig. 10 Contact too low and narrow. Pinion should be moved away from center of axle

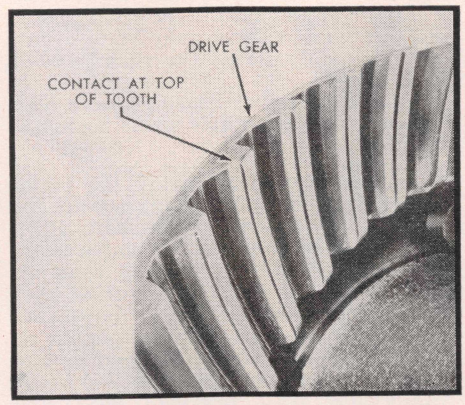

Fig. 11 Contact too high and narrow. Pinion should be moved toward center of axle

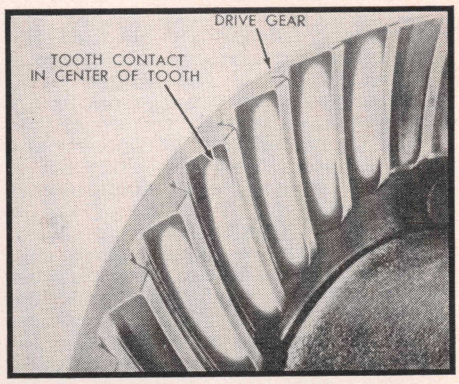

Fig. 12 Correct tooth contact

shims and place the assembly in the housing with the bearing cups. Force the unit to one side and check the clearance between the bearing cup and differential case with a feeler gauge, Fig. 5. When the clearance is determined, select shims of this amount plus .015-.020″ extra to establish the proper preload.

Remove the differential bearings again and divide the shims into two packs of equal thickness and install on each side and replace the bearings. Reinstall the unit in the carrier. This operation is made easier by cocking the bearing cups slightly when the differential is placed in the housing and then tapping them lightly with a mallet, Fig. 6. However, when installing the differential in the housing, be sure the ring gear teeth mesh with the pinion teeth before tapping the bearings in place.

After the bearing cups are firmly in place, install the bearing caps. The bearing caps and gasket surface of the housing are marked with a horizontal numeral and on the other side by a vertical numeral. The position of the numerals should correspond when reinstalling the bearing caps.

Ring Gear & Pinion Backlash, Adjust

Mount a backlash gauge indicator on the carrier and start checking for the correct backlash between the ring gear and pinion. If the backlash is not within the limits of .004″ to .009″, it will be necessary to change the arrangement of the shims back of the bearings. Make corrections in backlash according to Fig. 7, bearing in mind that shims removed from one side must be installed on the opposite side so that the total shim thickness of the right and left side will remain unchanged, and the bearing adjustment undisturbed.

Gear Tooth Contact Pattern

Allowable variations in the carrier or drive pinion may cause the pinion to be too far in or out even when shimmed properly. Thus, the tooth contact must be tested and corrected as necessary or the gears may be noisy.

Paint the ring gear teeth with a light coating of red lead, white lead or prussian blue. Revolve the gears and observe the contact, referring to Figs. 8 to 12.

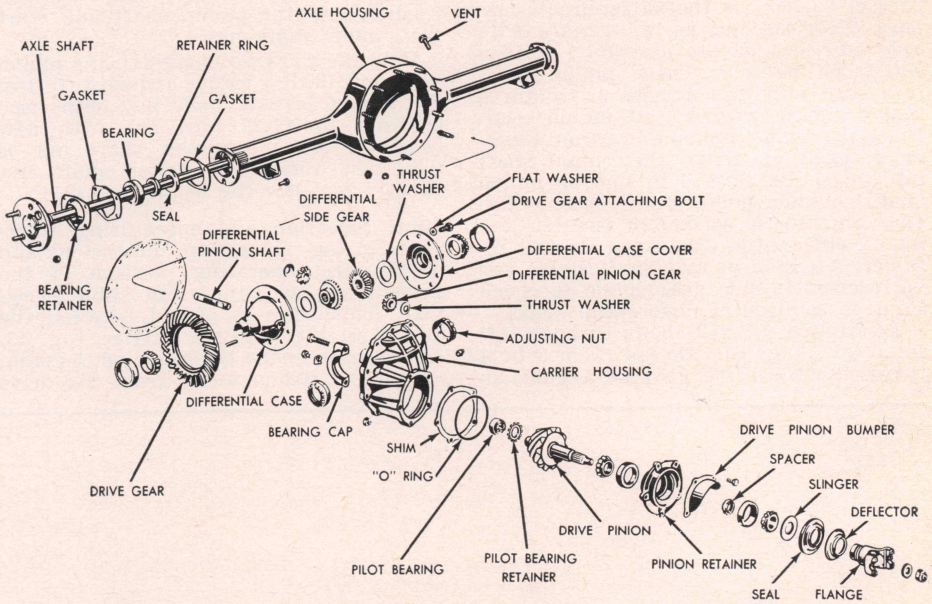

Fig. 13 Banjo type hypoid rear axle. 1957-63 F-100

FORD BANJO TYPE REAR AXLE

1957-63, F-100

This rear axle, Fig. 13, is a banjo-housing hypoid in which the drive pinion is mounted 2¼″ below the centerline of the drive gear. The drive pinion is straddle-mounted in that two opposed tapered roller bearings support the pinion shaft at the front of the pinion gear and a straight roller bearing supports the pinion shaft at the rear of the pinion gear.

The pinion shaft and gear are assembled in the pinion retainer which is bolted to the carrier housing. Two carrier and differential cases are used to accommodate two bearing sizes. The right and left axle shafts are not interchangeable since the left shaft is shorter than the right.

Disassembly

1. Mark one differential bearing cap and bearing support to ensure proper assembly. Remove adjusting nut locks, bearing caps and adjusting nuts. Lift differential out of carrier.
2. Remove drive gear from differential case.
3. Drive out differential pinion shaft retainer and separate the differential pinion shaft and remove gears and thrust washers.
4. Remove drive pinion retainer from carrier. Remove O-ring from retainer.
5. Remove pinion locating shim. Measure shim thickness with micrometer.
6. If the drive pinion pilot bearing is to be replaced, drive the pilot end and bearing retainer out at the same time. When installing, drive the bearing in until it bottoms. Install a new retainer with the concave side up.

7. Mount the drive pinion retainer assembly in a holding fixture and remove pinion shaft nut and flat washer. Then remove universal joint flange, oil seal and slinger.
8. Remove pinion retainer from fixture and place a protective sleeve or hose on the pinion pilot bearing surface. Then press the pinion shaft out of front bearing cone and remove spacer.
9. Remove pinion rear bearing cone.
10. Do not remove pinion bearing cups from retainer unless they are worn or damaged. The flange and pilot are machined by locating on these cups after they are installed in the bores. If new cups are to be installed, make sure they are seated in the retainer by trying to insert a .0015″ feeler gauge between cup and bottom of bore.

Assembly

Differential Case—Place a side gear and thrust washer in the differential case bore. *Lubricate all parts liberally with axle lubricant during assembly.* With a soft-faced hammer, drive pinion shaft into case only far enough to retain a pinion thrust washer and pinion gear. Place the second pinion and thrust washer in position. Drive the pinion shaft into place. Be careful to line up pinion shaft retainer holes. Place second side gear and thrust washer in position and install differential case cover. Install retainer. A pinion or axle shaft spline can be inserted in side gear spline to check for free rotation of differential gears.

Insert two $\frac{7}{16}$″ x 2″ bolts through differential flange and thread them 3 or 4 turns into the drive gear as a guide in aligning the drive gear bolt holes. Press or tap the drive gear into position. Install and tighten the drive gear bolts evenly and alternately across the gear to 60-65 lb. ft. torque.

If the differential bearings have been removed, use a suitable press to install them.

Pinion and Retainer—Install the pinion rear bearing cone on the pinion shaft and install a new spacer on the shaft. Place the bearing retainer on the pinion shaft, then install the front bearing cone. *As the bearing is pressed into position, rock the pinion retainer. Do not press the bearing on the shaft, until all play is removed between retainer and bearings as the spacer may be compressed too much.*

Lubricate both bearings with axle lubricant. Place oil slinger in position. Coat the outside edge of a new oil seal with an oil-resistant sealer and press it into the bearing retainer. New seals need not be soaked before installation. Install the universal joint flange. Place the flat washer over the pinion shaft and start the pinion shaft nut.

Hold the flange and tighten the pinion shaft nut until a torque required to turn the pinion is 8-12 *inch* lbs. with used bearings or 17-27 *inch* lbs. with new bearings. As the pinion shaft nut is tightened, rotate the pinion shaft frequently to allow the bearing to seat.

Shim Selection — Manufacturing tolerances in the pinion bore dimensions and in the best operating position of the gears make an adjustment shim necessary. This shim is placed between the pinion retainer and the carrier, Fig. 13. An increase in the thickness of the shim moves the pinion *away* from the drive gear. Manufacturing objectives are to make axles requiring a .0015″ shim and if a new assembly is being built, a .0015″ shim should be used for a tentative build-up. Shims are available in .010″ to .021″ thicknesses in steps of .001″.

Pinions and drive gears are marked, when matched, with the same number. Following the number on the pinion is a minus (—) or plus (+) followed by a number. If the pinion is marked "—1" it indicates that a shim .001″ thinner than a standard shim for this carrier is required. A minus number means the pinion should be moved closer to the drive gear and a thinner shim is required. A plus number means the pinion should be moved farther from the drive gear and a thicker shim is required. A pinion marked zero (0) is a standard pinion.

To select a shim, measure the original shim with a micrometer. Note the dimensional mark on the original pinion. Compare the mark on the original pinion with the mark on the new pinion to determine how the original shim should be modified.

For example, if the original shim is .015″ and the original pinion is marked "—1", the new pinion requires a +1 shim. Therefore, the new pinion requires a .002″ thicker shim, and a .017″ shim should be used. If the new pinion is marked the same as the old pinion, no shim change is required.

Backlash Adjustment—The threaded nut type of differential bearing adjustment is used. The procedure for making this adjustment and checking drive gear and pinion backlash is given in the *Rear Axle Service* chapter.

Four Wheel Drive Section

For service procedure on the transfer case used with four-wheel drive trucks, see the Transfer Case chapter

FRONT AXLE, 1959-63

The front axle on four wheel drive trucks is a single reduction Spicer type. For service procedure on the axle center, see the *Rear Axle Section* inasmuch as it is the same type as that which is used on the rear.

FRONT AXLE SHAFT

Removal

1. Raise truck on a hoist and then lower it so that the front axle is supported on a stand.
2. Referring to Fig. 1, remove hub dust cap and snap ring and slide splined driving hub from between outer axle shaft and wheel hub and drum.
3. After removing lock nut, washer and wheel bearing retaining nut from steering spindle, remove wheel, hub and drum as an assembly. The wheel outer bearing will be forced off the spindle at the same time.
4. Remove wheel inner bearing.
5. Place a drain pan under steering knuckle, and remove brake backing plate and spindle.
6. Pull outer axle shaft, universal joint and inner axle shaft from housing as an assembly.

Installation

Reverse the removal procedure to install the axle shaft. When installation is complete, remove the steering knuckle filler plug and fill the knuckle with ½ pint of the proper lubricant.

SPINDLE BEARING

Removal

1. Referring to Fig. 1, remove the inner and outer axle shafts and U-joint from each end of the axle housing.
2. Disconnect upper spindle arm from steering drag link (left side only).
3. Disconnect spindle connecting rod (tie rod) from front spindle arm.
4. Remove oil seal retaining bolts from rear flange of steering knuckle and remove the two-piece retainer.
5. Remove upper spindle arm (left side) and integral bearing cap and shaft from steering knuckle. On the right side there is only a bearing cap and shaft assembly. Remove bearing preload shims.
6. Remove lower spindle bearing cap and shaft from steering knuckle.

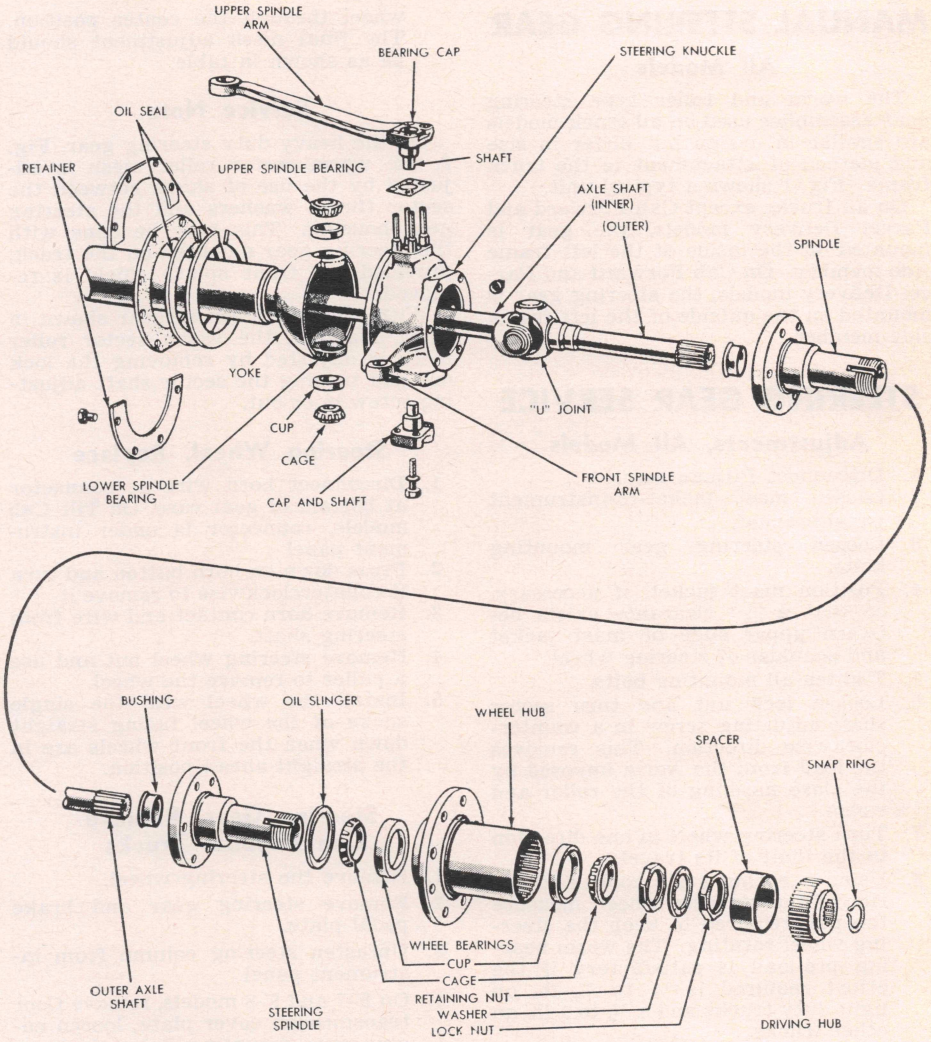

Fig. 1 Four wheel drive front axle assembly. 1959-63

7. Remove steering knuckle from axle housing yoke.
8. After removing upper and lower spindle bearings from the axle housing yoke, remove upper and lower bearing cups from yoke.
9. Remove felt, rubber and metal oil seal rings from axle housing.

Installation

Reverse the removal procedure to install the bearings. However, to mount the steering knuckle on the axle housing yoke, first fit the lower end of the knuckle over the bottom of the yoke so that the lower bearing will fit into the cup; then bring the entire knuckle into position on the yoke.

Place the bearing preload shims over the studs on the upper side of the knuckle and install the upper bearing cap and shaft. The shaft is inserted in the bearing and the cap is bolted to the upper side of the knuckle.

To check the bearing preload, place a torque wrench on one of the bearing cap nuts and pivot the knuckle on its bearings. As the knuckle is turned, a preload reading of 5 to 10 inch-pounds should register on the torque wrench. After removing or adding shims to establish correct preload, torque bearing cap nuts to 25 ft. lbs.

Steering Section

MANUAL STEERING GEAR

All Models

The worm and roller type steering gear assemblies used on all truck models are similar in design but differ in size and method of attachment to the truck frame. Fig. 1 shows a typical unit.

On all trucks except Cab Forward and Parcel Delivery models, the gear is mounted on the inside of the left frame side member. On Cab Forward and Parcel Delivery models, the steering gear is mounted on the outside of the left frame side member.

STEERING GEAR SERVICE

Adjustments, All Models

1. Disconnect Pitman arm.
2. Loosen mast jacket-to-instrument panel bracket.
3. Loosen steering gear mounting bolts.
4. Position mast jacket, if necessary, so that a $\frac{1}{16}''$ clearance exists between upper edge of mast jacket and shoulder of steering wheel.
5. Tighten all mounting bolts.
6. Loosen lock nut and turn sector shaft adjusting screw in a counterclockwise direction. This removes the load from the worm imposed by the close meshing of the roller and worm.
7. Turn steering wheel in one direction to the limit of its travel.
8. Using a spring scale hooked to the rim of the steering wheel, measure the pull required to keep the steering wheel rotating. The worm bearing pre-load is satisfactory if the effort required is ¼ to ¾ lb. on light duty trucks and a ½ to 1 lb. on other trucks.
9. If the pre-load is below the required limits, remove the shims from underneath the steering gear housing end plate, Fig. 1. Add shims if the pre-load is greater than the maximum allowable limit.
10. Turn the steering wheel from one extreme to the other, counting the total number of turns. Turn the wheel back exactly halfway to the center position.
11. Turn the sector shaft adjusting screw in a clockwise direction until all end play is removed from the sector shaft.
12. Using a spring scale, measure the effort required to turn the steering wheel through the center position. The final mesh adjustment should be as shown in table.

	F-100, F-250	350 thru 600	F-700 thru 1100; B-700, 750; C-550 thru 700; T-700 thru 850	C-750 thru 1100
Worm Bearing Pre-load (Pull to keep wheel moving—lbs.)	¼-¾	¼-¾	½-1	½-1
Worm to Roller Mesh (Pull through high point—includes worm bearing pre-load—lbs.)	1-2	1¼-2	1½-2½	1½-3

Service Note

On the heavy duty steering gear, Fig. 2, the worm sector roller mesh is adjusted by the use of shims between the sector thrust washers and the steering gear housing. This may be done with the steering gear mounted on the truck, provided the front splash shield is removed.

With the type steering gear shown in Figs. 3 and 4, the worm sector roller mesh is adjusted by removing the lock nut and turning the sector shaft adjusting screw in or out.

Steering Wheel, Replace

1. Disconnect horn wire at connector at bottom of gear case. On Tilt Cab models, connector is under instrument panel.
2. Press down on horn button and turn it counterclockwise to remove it.
3. Remove horn contact and wire from steering shaft.
4. Remove steering wheel nut and use a puller to remove the wheel.
5. Install the wheel with the single spoke of the wheel facing straight down when the front wheels are in the straight-ahead position.

Steering Gear, Remove Conventional Trucks

1. Remove the steering wheel.
2. Remove steering gear and brake pedal plate.
3. Unfasten steering column from instrument panel.
4. On F-7 and F-8 models, remove floor transmission cover plate, loosen engine rear mounting bolts, jack up transmission about 1¼", and remove engine oil dipstick and tube.
5. On all models, pull off Pitman arm.
6. Unfasten steering gear housing from frame.
7. Remove steering gear from underneath truck.

Tilt Cab Trucks

1. Remove the upper universal joint retaining nut and bolt.
2. Turn the wheel to the right and remove the Pitman arm.
3. Remove steering gear housing to frame bolts and remove the steering gear with universal joint attached.
4. Remove universal joint from the worm shaft.

Service Note

On some models it may be necessary to raise the front of the truck to remove the steering gear. It may also be necessary to remove oil filters or filter adapters to remove some steering gears.

Steering Gear, Disassemble

1. Drain lubricant from housing.
2. Remove sector shaft with housing cover.
3. Disassemble sector shaft from cover.
4. Remove steering gear housing end plate and tube assembly from housing.
5. Remove worm lower bearing and cup.
6. Loosen steering column clamp and remove tube and upper bearing from steering shaft.
7. Remove felt oil seal from top of gear housing.

Steering Gear, Assemble

If the sector shaft bushings are to be replaced, press the new bushings into the housing. The bushing nearest the oil seal should be flush with the inner edge of the grease retainer counterbore. The other bushing must be pressed in flush with the inside edge of the housing or housing cover, whichever applies. The needle bearing on gears so equipped should be installed flush with the outside surface of the housing cover. Burnish the bushings to the proper size.

Cover the serrations on the sector shaft with tape and carefully install a new grease retainer with the lips of the rubber facing inward toward the flow of grease.

Install the upper bearing cup and bearing in the gear housing. Slide the steering shaft and worm into the housing. Position the lower worm bearing cup, the same gaskets previously removed, and the steering gear housing end plate and tube assembly.

If new bearings have been installed, be sure to add new shims as necessary to give the proper pre-load. Tighten the cap screws. Install the felt seal over the steering shaft at the top of the gear housing.

Install the sector shaft and housing cover and tighten the cap screws.

Steering Gear, Install Conventional Trucks

1. Work from underneath the truck and position the gear assembly on the frame.
2. Install, but do not tighten, the bolts that secure the gear housing to the frame.
3. On gears which have a mounting bolt which can interfere with the movement of the steering gear arm, mount the bolt with its head on the outside of the frame.

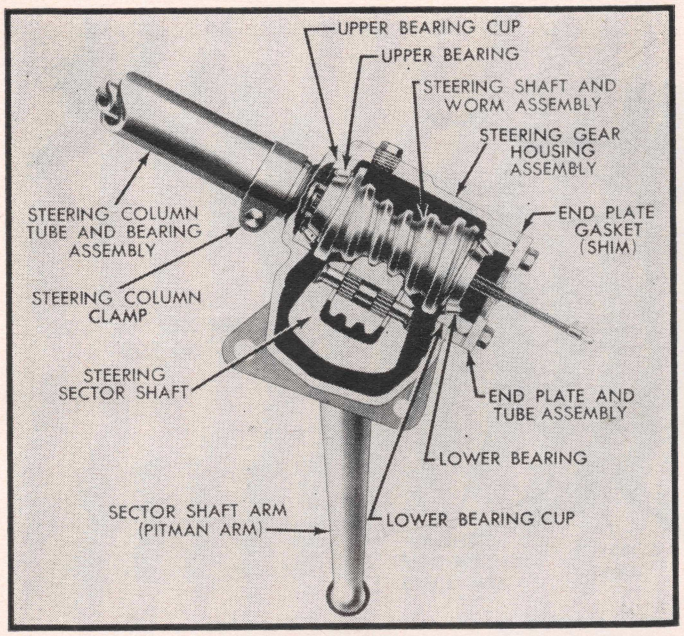

Fig. 1 Typical steering gear assembly

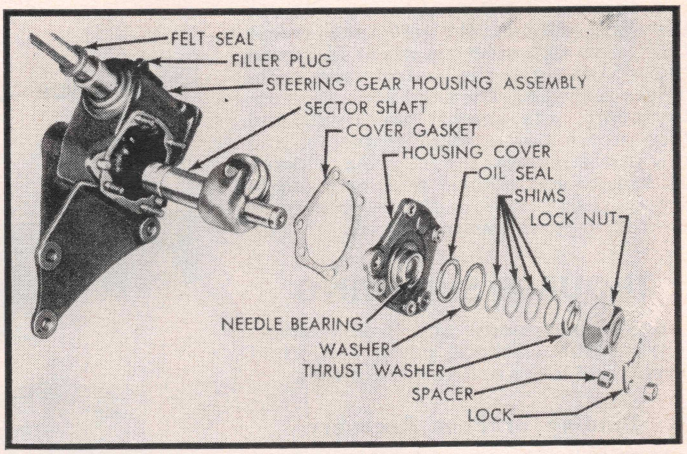

Fig. 2 Heavy duty steering gear

4. Secure bracket to instrument panel, making sure rubber spacer is in place between bracket and column tube.
5. Tighten steering gear mounting bolts.
6. Install Pitman arm and tighten to a torque load of 170-180 lb. ft.
7. Install brake pedal plate and steering wheel.
8. Fill gear housing with lubricant and check for proper operation and adjustment.

Tilt Cab Trucks

1. Install woodruff key in the worm shaft if it fell out upon removal of gear.
2. Install universal joint.
3. Position steering gear housing on the frame side rail and install attaching bolts and nuts.
4. Have a helper push the steering shaft down until the woodruff key can be installed in the shaft.
5. Align the key with the slot in the universal joint, then push the shaft and key into the joint.
6. Install and tighten universal joint upper bolt and lock nut.
7. Install the Pitman arm, making sure the lock bolt slot lines up, and tighten to 180-220 lbs. ft.
8. Install horn wire brush in steering column.
9. Fill gear housing with lubricant and check for proper operation and adjustment.

POWER STEERING

F, B and T Models

The power steering system on these models, Fig. 5, consists of a pump and fluid reservoir, a control valve, a power cylinder, the connecting fluid lines and the steering linkage. The system used on Tilt-Cab models (see Fig. 10) differs in that a booster cylinder is used in place of the power cylinder installed on the other trucks.

The hydraulic pump, belt-driven by the engine crankshaft, draws automatic transmission fluid from the reservoir and provides fluid pressure for the system. Within the pump itself is a flow-control and pressure-relief valve which governs the pressures within the steering system according to the varying conditions of operation. After fluid has passed from the pump to the rest of the power steering system, it returns to the reservoir where it is filtered before returning to the pump.

The control valve, operated by steering wheel movement, directs the pressure developed by the pump. When the front wheels are in the straight-ahead position, the control valve spool is held in its center (neutral) position. Fluid then flows around the valve lands and returns to the reservoir.

When the steering wheel is turned to the left, the control valve spool moves toward the forward end of the valve. As a result, pressure from the pump is directed to the left-hand end of the power cylinder, and fluid from the right-hand end of the cylinder is directed back to the pump reservoir.

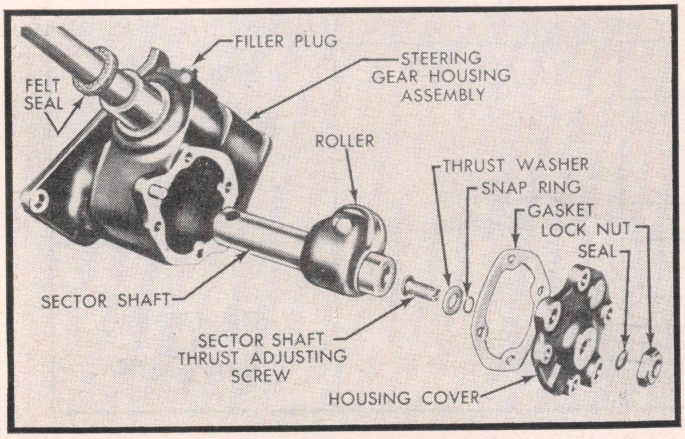

Fig. 3 One type of medium duty steering gear

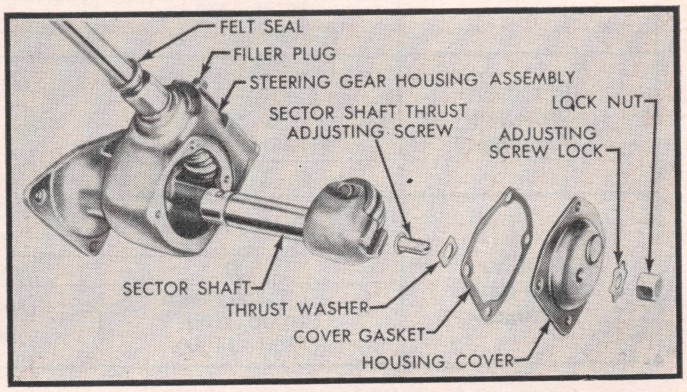

Fig. 4 Another type of medium duty steering gear

A power-assisted right turn is made in the same way as the left turn except that when the steering wheel is turned toward the right, the control valve spool moves rearward. The fluid pressure from the pump acts against the right-hand face of the power cylinder piston, and the piston moves the steering linkage toward the left. *Should the pump fail to deliver fluid pressure, the truck may be steered without pump pressure.*

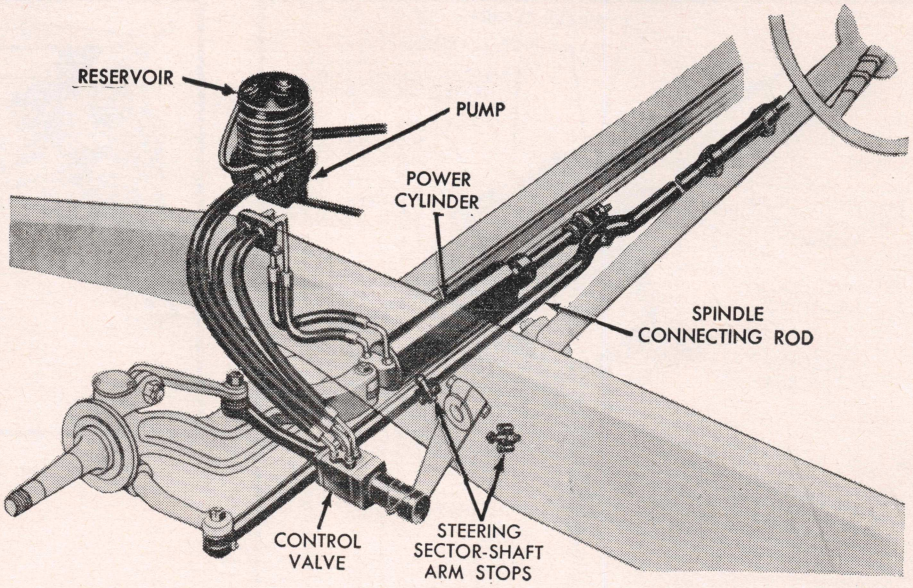

Fig. 5 Power steering system for F, B and T models

TROUBLE SHOOTING

Before performing any trouble shooting operations, check pump belt, fluid level, fluid leaks and turning effort.

Binding or Poor Recovery

If the steering wheel binds or sticks when turned, or if poor recovery to the straight-ahead position occurs, check the pitman shaft arm ball stud in the drag link outer sleeve. If binding is evident, make sure that the ball stud seats, spring and washer are properly installed.

Check the steering gear adjustments. The worm bearing preload and the worm and roller mesh adjustment should be within specifications.

Check the operation of the control valve spool in the valve housing. If the spool is binding in the housing, check the spool adjustment. If the adjustment is correct, overhaul or replace the control valve.

Check for interference between the sector shaft arm and the dust shield at the ball stud and, if necessary, replace the dust shield and/or ball stud.

Check the valve spool bolt lock nut adjustment. If the nut is drawn up too tightly, the ball stud will bind in the seats. Adjust the lock nut as required.

Check the control valve inner and outer sleeves for damage. Replace parts that show signs of damage, and adjust the valve spool lock nut.

Hard Steering

If the effort required to turn the steering wheel is greater than normal for the entire travel of the front wheels, perform a fluid pressure test (see Fig. 6). If the pump output pressure is low, and the pump belt is properly adjusted, the pump may be malfunctioning and should be overhauled.

If the pressure test shows that the trouble is in the control valve or power cylinder (booster cylinder on Tilt Cab models) remove and inspect these units. Repair or replace any damaged parts.

If the pressure test indicates that the pressures throughout the system are within specifications, check the following items in the order given:

Check the control valve spool for movement. If the spool does not move freely, check for and eliminate interference between the drag link outer and inner sleeves. If the spool is sticking in

Pump Type	Truck Model	Front Axle (Rated Capacity)	PRESSURES	
			Engine—Idling Wheels Straight Ahead Shut-Off Valve Open	Shut-Off Valve Closed
ROLL (with Bushings)	F-100, 250	2600	50-60 psi	900-1050 psi at 2500 Engine rpm
	F-350—600 P-350—500 B-500, 600	3800 thru 6000	60-70 psi	
	F, -B, -700 T-700 (292 V-8)	6000	55-65 psi	
ROTOR (With Ball Bearings)	F-, T-750—1100 C-850—1100 B-750 T-700 (332 V-8)	6000 thru 9000		
	F, -T, -800	11000		
ROLL (With Ball Bearings)	C-550, 700	6000 7000		1100-1300 psi at 1500 Engine rpm
	T-800	15000		
	F-, T-850, 950 F-1000, 1100 C-800—1100	11000 15000		

Fig. 6 Power steering pump applications and pressures

the housing, remove the spool and check the spool lands for burrs. Small burrs may be removed with crocus cloth provided the edges of the valve lands are not rounded in the process. If the spool cannot be repaired, replace the control valve.

Check the sector arm ball stud for free movement in the stud seats. If the ball is binding in the seats, adjust the drag link.

Excessive Free Play

If excessive free play or lost motion is noticed when steering, check the steering gear worm and roller mesh adjustment.

Check for excessive clearance between the sector arm ball stud and stud seats. If the stud is loose in the seats, adjust the drag link.

Noise

Check pump belt tension. If the belt is too tight, pump noise may result. A loose belt can cause belt squeal.

Noise may result if the specified hose is not used. If noise still exists with the proper hose installed, the pump should be removed and inspected.

Air in the system may also cause noise. To bleed the system, turn the wheels several times to each stop.

Steering Chatter

A loose pump belt can cause chatter against the wheel stops during an extremely sharp turn. Check and adjust belt tension.

Check for looseness in the spindle connecting rod connections. Looseness at this point may be due to low torque on the connecting rod ball stud or a worn adapter pin between the power cylinder and mounting bracket. Tighten the ball stud to specifications and replace any worn mounting parts.

Rattles

Check for looseness between sector arm ball stud and stud seats. If ball is loose in seats, adjust drag link.

Loss of Power Assist

Check the entire system for damaged or broken hoses. Replace or tighten a loose pump belt.

Perform a pressure test to determine whether the trouble is in the pump, the control valve or the power cylinder.

If the pressure test indicates that the pump is at fault, remove and repair the pump.

If the pressure test indicates that the control valve or power cylinder is at fault, check the following:

Disconnect the power cylinder piston rod from the spindle connecting rod. Operate the piston by hand to check for resistance to movement. If the piston moves easily with little or no resistance, the internal parts of the power cylinder are broken or damaged. Replace the power cylinder.

Check the operation of the control valve check valve. If the check valve does not operate freely, replace the check valve assembly.

FLUID PRESSURE TEST

A special pressure gauge assembly (tool No. T54L-33610-C) is available through the Ford Motor Co. for making this test.

Disconnect the pressure line hose from the pump outlet, and install the pressure gauge between the hose and pump outlet. *Be sure that the gauge is between the pump and shut-off valve on the tool.*

Open the shut-off valve on the tool and run the engine at idle speed. *If the pump normally operates quietly, ignore the louder pump noise when the pressure testing tool is connected to the system.* Allow at least two minutes for the fluid to warm up before starting the pressure checks.

1. Check the pressure with the wheels straight ahead (control valve in neutral). The pressure should not exceed the maximum neutral position pressure specified for the pump being checked, Fig. 6, with the engine operating at idle speed. If the pressure is higher, check the pump or control valve for faulty operation, or inspect the hoses, lines and connections for kinks and other obstructions.
2. Increase engine speed as indicated in Fig. 6 and then slowly close the gauge shut-off valve. If the pump is operating satisfactorily, the pressure should increase to the specified relief pressure range when the shut-off valve is fully closed. *Do not leave the shut-off valve closed for more than 15 seconds.*
3. If the pressure increases to more than the high limit of the relief pressure range, the pressure relief valve is not operating properly, and a pump overhaul is indicated.
4. If the pressure, with shut-off valve fully closed, is less than the minimum relief pressure, the trouble is in the pump. If the pressure increases to the specified relief pressure range, the trouble is in the control valve or power cylinder.

PUMP, REPLACE

100 Thru 600 (Except C) Models

1. To remove pump, remove reservoir cover.
2. Disconnect reservoir-to-pump hose.
3. Drain fluid from reservoir.
4. Disconnect pump-to-control valve hose from pump and fasten it in a raised position to prevent fluid from draining out.
5. Remove pump drive belt.
6. Remove pump.
7. Install pump in reverse order of removal. Fill reservoir to within one inch of top and install cover. Run engine at idle speed for about two minutes to warm the fluid. Turn steering wheel to both extremes several times and check for leaks. Increase engine speed to a fast idle and repeat.

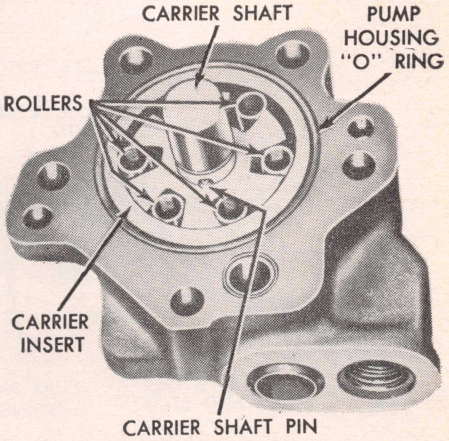

Fig. 7 Pump housing and related parts

Models 700 Thru 1100 & C550, C600

1. Using a suction gun, remove as much fluid as possible through reservoir filler opening.
2. Disconnect pressure hose from pump and disconnect return line from cooler. Then fasten both hoses in a raised position to prevent fluid from draining out. *On C Series, the hoses can be more easily disconnected after the pump has been removed from its bracket and is resting on the frame member.*
3. Remove pump belt and pump.
4. When installing, check alignment of crankshaft pulley with pump pulley. If pulleys are not aligned, pump may be incorrectly installed, or it may be necessary to install spacers to align pulley.
5. When pump belt tension is correct, tighten adjusting bolt to 30-35 ft. lbs. Then tighten pivot bolt 20-25 ft. lbs. Tighten pump hose adapter to 30-35 ft. lbs.
6. Fill reservoir, start engine and run it at idle speed for two minutes. Then turn steering wheel to both extremes several times and check system for leaks.

PUMP REPAIRS

Disassembly

When disassembling the pump, lift the pump cover vertically from the housing to prevent the internal parts from falling out.

Before removing the parts from the pump housing, use a feeler gauge and a straight-edge to check the end clearance of the carrier and rollers in the housing, Fig. 7. If the clearance exceeds .0015", replace the worn parts. *A damaged roller, carrier or insert should not be replaced by itself; these parts are serviced in a kit and all parts of the kit should be used.*

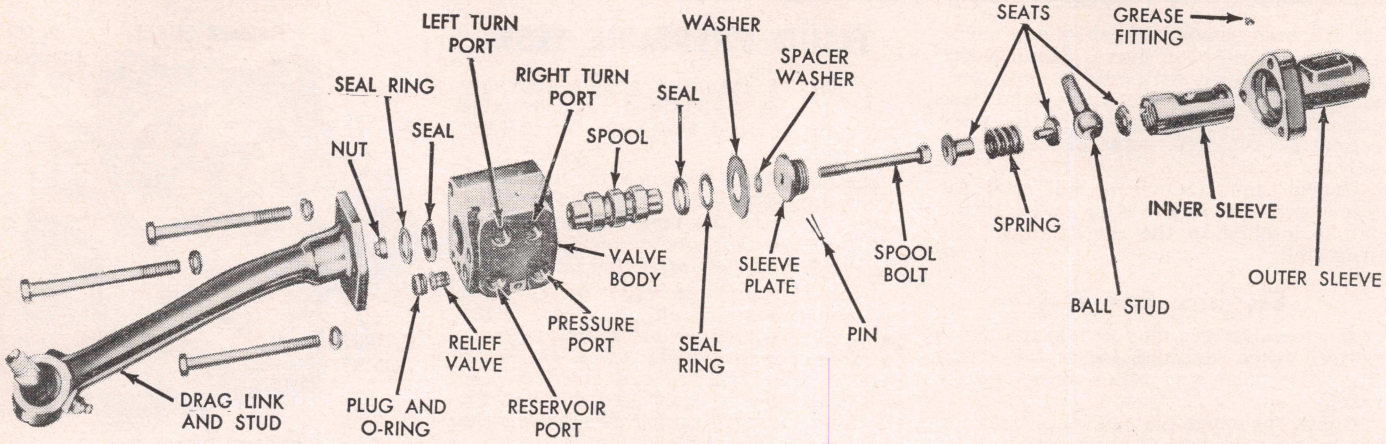

Fig. 8 Control valve and drag link for light duty trucks

Inspection & Repairs

When all parts are disassembled, inspect the pump housing and cover for wear caused by turning of the rollers and the carrier. Check the carrier shaft bushings or bearings in the housing and cover for wear or scores. If bushings show wear or damage, replace the housing and/or cover. Replace the bearing or bushings if necessary.

Inspect the carrier, shaft and rollers for wear or any kind of damage. A damaged roller, carrier or insert should not be serviced alone; these parts are serviced in a kit and all parts of the kit should be used.

Be sure the valve and its bore are dry. Insert the valve in the housing and check for free movement of the valve in the bore. Remove any burrs with crocus cloth.

Inspect the carrier shaft seal in the pump housing for wear or damage. If there is damage or wear, carefully remove the seal with a punch, avoiding damage to the shaft bushing. *Remove the seal only when necessary.* Coat the lip of the new seal with Lubriplate or equivalent. *Position the seal in the bore with the lip facing toward the pump housing carrier chamber.* Press the seal into the housing until it seats firmly and evenly against the shoulder in the bore.

Assembly

During assembly, coat all parts with automatic transmission fluid.

If the carrier insert is to be replaced, the new insert must be installed so that the slot in the edge of the insert engages the small pin in the pump housing.

To avoid damaging the oil seal in the housing cover, carefully insert the shaft (with pulley attached) through the housing. Position the carrier shaft pin and slide the carrier onto the shaft.

When the pulley retaining bolt is properly tightened to a torque of 15-20 ft. lbs. the carrier shaft should turn freely.

When installing the reinforcement on the reservoir, the ears on the reinforcement should be facing upward over the outer hole in the reservoir.

When installing the reservoir cover, be sure the cover is seated evenly and tightly around the edge of the reservoir.

CONTROL VALVE, REPLACE

Models 100 Thru 600 (Except C550, C600)

To remove the control valve, disconnect the four hoses at the valve and drain the fluid from the hoses. Disconnect the studs from the spindle arm and sector shaft arm and remove the control valve and drag link.

Reverse the procedure to install the valve. Then fill the reservoir and operate the engine at idle speed for two minutes to warm the fluid. Increase engine speed to a fast idle and turn the steering wheel to both extremes several times to bleed the system of air and then check for leaks.

Models 700 Thru 1100 and C550, C600

1. Disconnect four hoses from control valve and drain fluid from hoses.
2. Remove dust cover from end of drag link outer sleeve.

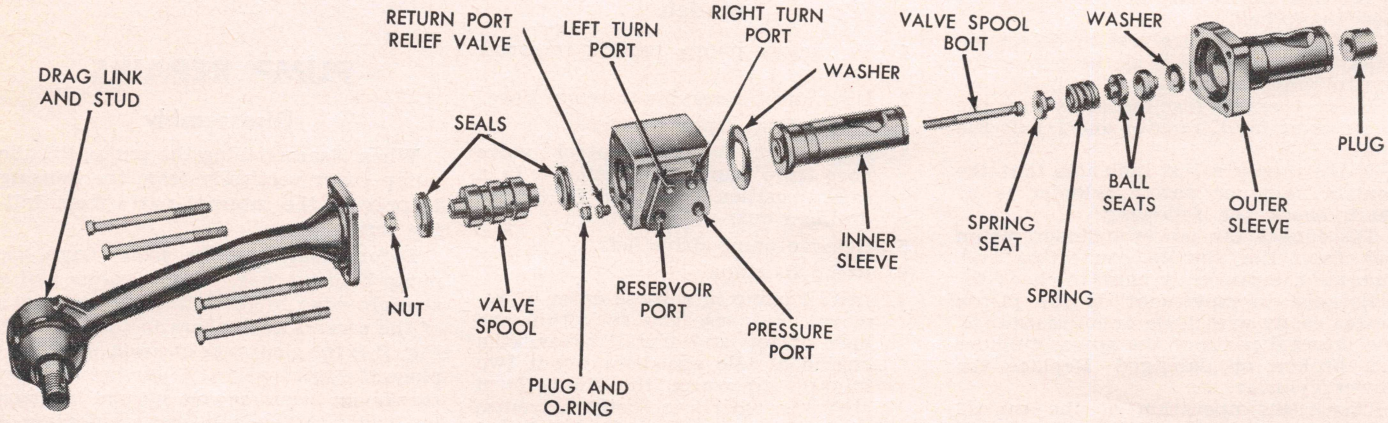

Fig. 9 Control valve and drag link for heavy duty trucks

3. Unscrew ball plug from end of drag link sleeve.
4. Disconnect drag link from sector shaft arm ball stud.
5. Disconnect forward end of drag link from left spindle arm and remove control valve and drag link from truck.
6. Installation is made in the reverse order of removal.

CONTROL VALVE REPAIRS

Disassemble and assemble the control valve as indicated in Figs. 8 and 9.

When disassembled, clean all parts thoroughly and inspect them for wear or damage as follows:

1. Examine the lips of the seals for nicks or scratches that could allow fluid to escape from the control valve.
2. Examine the control valve spool for burrs and scoring. Remove burrs with crocus cloth. *Do not round off the sharp edges on the spool as the operation of the valve may be affected.*
3. Inspect control valve housing for burrs, scores or damaged surfaces. Remove burrs with crocus cloth.
4. Dry valve spool and housing thoroughly and insert spool in housing. Spool should fall freely of its own weight through housing.
5. Inspect mating surfaces of drag link inner and outer sleeves for wear or damage. Minor burrs or scores may be removed with crocus cloth. Check the fit of the inner sleeve in the outer sleeve. The inner sleeve should slide freely in the outer sleeve.
6. Check the drag link ball stud seats and spring for wear or damage.

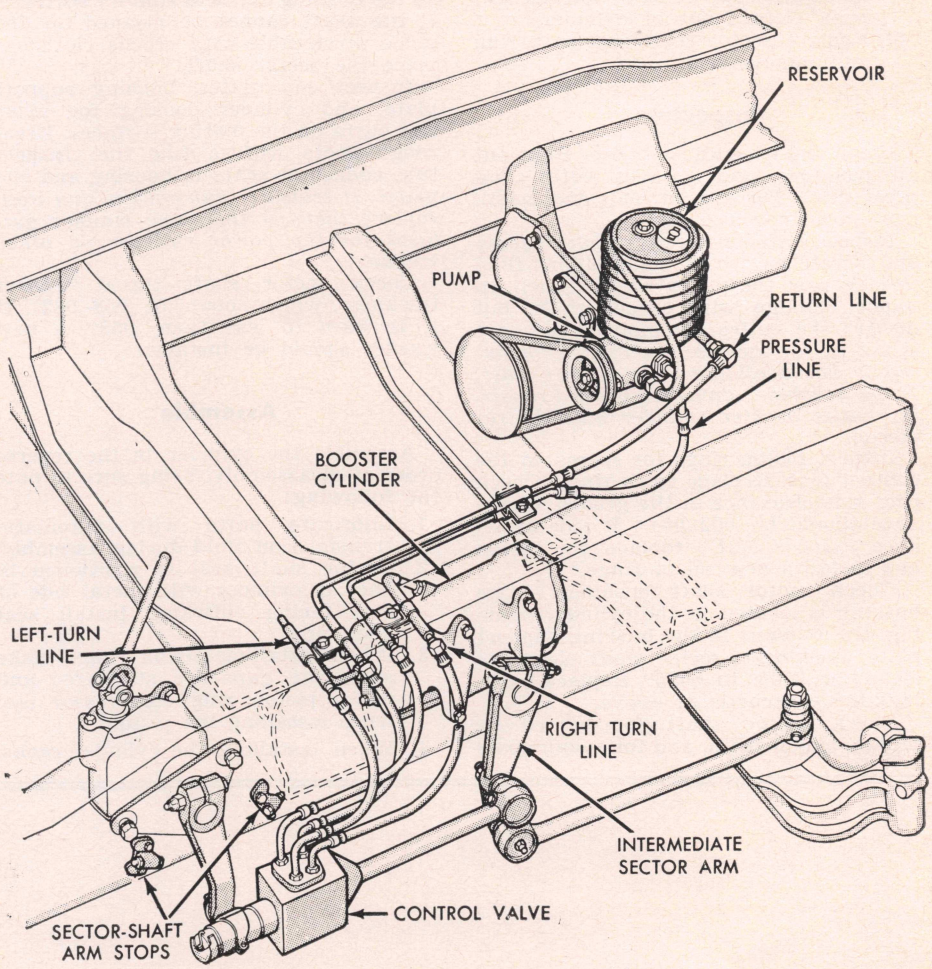

Fig. 10 Power steering installation on Tilt Cab models

POWER CYLINDER

1. To remove, disconnect control valve-to-power cylinder hoses at power cylinder. Fasten ends of hoses in a raised position to prevent fluid drainage.
2. Disconnect parts from end of spindle connecting rod end of power cylinder.
3. At the anchored end of the cylinder, remove nut, pin and two bushings. Then remove power cylinder from truck and drain fluid.

Inspection

Clean outside of cylinder and wipe parts dry. Inspect the cylinder and piston for wear or damage. The internal parts of the cylinder, except the seals and hose seats, and the rod cannot be repaired or replaced. If either the cylinder or rod is worn or damaged, or if the piston is leaking internally, the entire power cylinder assembly must be replaced as a unit. The cylinder seals and seats are replaceable.

Inspect the mounting bushings and insulators for wear or damage and replace as necessary.

Seal Replacement

Install all parts contained in the seal kit. Clamp the cylinder in a vise and remove the snap ring from the end of the cylinder. Pull piston rod out all the way to remove the scraper, bushing and seals. Lubricate the inner seal with automatic transmission fluid. Then place seal, bushing, outer seal and scraper on the piston rod. Push the rod in all the way and install the parts in the cylinder with a deep socket slightly smaller than the cylinder opening. Install snap ring in end of cylinder.

Hose Seat, Replace

If either hose seat is worn or damaged both seats should be replaced.

Tap the hole in the power cylinder hose seat with a 3/8" starting tap. *Be sure to remove all metal chips from the hole after tapping.*

Place a nut and flat washer large enough to cover the seat port on a 3/8" bolt, then thread the bolt into the tapped hole and turn the nut to pull the seat out of the port.

Position the new seat in the port and thread a 5/8-18 bolt into the port until the seat bottoms in the port.

C SERIES BOOSTER CYLINDER

The booster cylinder on Tilt Cab models drives the intermediate pitman arm which in turn drives the rear drag link, spindle arm and spindle connecting rod. Fig. 10.

Removal

1. Tilt cab forward and drain cooling system.
2. Remove fan and radiator.
3. Disconnect idler arm from steering sector shaft.
4. Place drain pan under cylinder and disconnect left and right turn lines from cylinder.
5. Unfasten and remove cylinder from truck.

Disassemble

1. Remove front-to-rear end plate tube and drain fluid from cylinder.
2. Remove sector shaft bushing support plate from side of cylinder.
3. Remove sector shaft and thrust washer from housing.
4. Remove cylinder end plates, then

reach into support plate opening and push pistons out of cylinder.

5. Remove sector shaft seal snap ring and remove seal.

Inspection

Clean and wipe all parts dry. Blow out all passages and grooves with compressed air. Discard all seals and install new ones upon assembly.

Inspect cylinder bore for nicks, scores and scratches which could allow fluid to leak past the piston rings. Touch up minor damage with crocus cloth, but discard the entire assembly if the bore is not fit for service. *The cylinder housing is not available as a service part. If the housing is damaged beyond repair, the entire booster cylinder must be replaced.*

Inspect piston rings for scores on the contact face. Replace worn rings. Check ring side clearance in the groove. Clearance should be .002-.004″. If side clearance exceeds .004″, replace the piston and install a new set of rings.

Check sector shaft bushings. One bushing is located in the cylinder housing, the other is in the bushing support plate. Bushing-to-sector shaft clearance should be .0005″ to .0025″. Replace bushings if clearance is excessive.

Check sector shaft for burred or broken pinion teeth, and for rough spots on the bushing and seal contact surfaces. If the shaft cannot be cleaned up and made serviceable with crocus cloth, replace the sector shaft.

Inspect end plates, bushing support plate, and cylinder housing for nicks and burrs on the mating surfaces. Dress rough spots with a fine file. Inspect tube connector seats in housing and end plates. *If seats are damaged in any way, replace them in the same manner outlined for the power cylinder on other trucks.*

Check sector shaft thrust washer thickness, which should be .058-.062″. If it is worn to less than .058″, a new washer should be installed.

Assemble

Assemble the cylinder in the reverse order of disassembly, being sure to note the following:

1. Lubricate parts with automatic transmission fluid during assembly.
2. Sector shaft seal is positioned in bore in cylinder with metal side of seal facing outward. Install seal snap ring.
3. When installing piston rings, make sure ring gaps are staggered and use a piston ring compressor tool when installing the piston.
4. When installing the cylinder racks, the two center teeth on each rack are identified by "X" marks. The upper and lower center teeth on the sector shaft pinion are also identified by "X" marks. Position the pistons in the cylinder so that the "X" marks are aligned when the sector shaft is installed.
5. Place the sector shaft thrust washer in the cylinder housing. Install the sector shaft with the serrations facing down and with the "X" marks properly aligned.
6. When assembled, tighten the end plate bolts to a torque of 12-15 ft. lbs. When the front-to-rear end plate connector tube is installed, tighten the fittings to 30-40 ft. lbs.

Installation

Reverse the removal procedure to install the booster cylinder. Tighten the hydraulic line fittings to a torque of 30-40 ft. lbs. Fill the cooling system. Fill the reservoir with automatic transmission fluid. Start the engine and turn the steering wheel one full turn to the right and to the left to fill the booster cylinder and lines. Stop the engine and refill the reservoir. Then start the engine and check for leaks after making another full right and left turn.

FORD ECONOLINE

INDEX OF SERVICE OPERATIONS

PAGE NO.

AXLES, DRIVING

Eaton Axle Service 176
Ford Axles 634
Locking Differentials 169
Timken Axle Service 209

BRAKES

Adjustments 635
Air Brake System 259
Hydraulic Brake System 250
Master Cylinder, Replace 635
Vacuum Brake Boosters 268

CLUTCH 631

COOLING SYSTEM

Cooling System Capacity 623
Radiator, Replace 628
Water Pump Repairs 629
Water Pump, Replace 629

ELECTRIC SYSTEM

Alternators & Regulators 37
Dash Gauge Service 93
Distributor, Replace 629
Distributor Specifications 623
Distributor Service 7
Generator Specifications 623
Generator & Regulator Service 27
Ignition, Transistorized 22
Ignition Timing 629
Starter, Replace 629
Starting Motor Specifications 622
Starting Motor Service 65
Starter Switch Service 85

PAGE NO.

ENGINE

Camshaft Bearings, Replace 626
Camshaft, Replace 626
Crankshaft Bearing Specifications 622
Crankshaft Oil Seal 628
Cylinder Head, Replace 624
Engine, Replace 624
Main Bearings, Replace 628
Piston Pins 626
Piston Rings 626
Piston & Ring Specifications 622
Pistons & Rods, Remove 626
Piston & Rod, Assemble 626
Pistons 626
Rocker Arms, Replace 625
Rod Bearings 628
Timing Case Cover 626
Timing Chain 626
Valves, Adjust 624
Valve Arrangement 624
Valves, Grind 624
Valve Guides 624
Valve Lifters, Replace 626
Valves, Remove 624
Valve Spring Installed Height 625
Valve Spring Testing 625
Valve Specifications 622
Valve Stems, Grinding 625

ENGINE OILING

Crankcase Capacity 623
Crankcase Ventilation 6
Oil Pan, Replace 628
Oil Pump Repairs 628
Oil Pump, Replace 628

PAGE NO.

FUEL SYSTEM

Carburetor Adjustments 630
Carburetor Service Notes 630
Crankcase Ventilation 6
Fuel Pump Service 104
L.P.G. Carburetion 109

SPECIFICATIONS

Brake Cylinder 622
Carburetor Adjustment 630
Cooling System & Capacity 623
Crankshaft & Bearing 622
Distributor 623
Engine Tightening Torque 623
Generator & Regulator 623
Piston, Pin & Ring 622
Rear Axle 622
Starting Motor 622
Tune Up 621
Valve 622
Wheel Alignment 622

STEERING GEARS 636

TRANSFER CASES 242

TRANSMISSIONS

Clark 110
Ford 631
Fuller 122
New Process 135
Spicer 141
Warner 164
Powermatic 281

TUNE UP SERVICE 2

GENERAL SPECIFICATIONS

Year	Model Designation	Engine	Valve Location	Bore and Stroke	Piston Displacement, Cubic Inches	Compression Ratio (Standard)	Maximum Brake H.P. @ R.P.M.	Maximum Torque Lbs. Ft. @ R.P.M.	Normal Oil Pressure Pounds
1961	All Models	6–144	In Head	3.500 x 2.50	144	8.7	90 @ 4200	138 @ 2000	35–55
1962–63	All Models	6–144	In Head	3.500 x 2.50	144	8.7	85 @ 4200	134 @ 2000	35–55
	All Models	6-170	In Head	3.500 x 2.94	170	8.7	101 @ 4400	156 @ 2400	35–55

TUNE UP SPECIFICATIONS

★When using timing light, disconnect vacuum line to prevent advance mechanism from operating.

Year	Model	Ground Polarity and Voltage	Spark Plug		Distributor		Firing Order	★Ignition Timing		Idle Speed RPM In Neutral	Compression Pressure @ Cranking Speed Minimum
			Type ①	Gap Inch	Point Gap Inch	Cam Angle Degrees		Mark	Location		
1961	All	N-12	F-14Y①	.034	.025	35–38	153624	4°	Pulley	565	170
1962	All	N-12	BF-82②	.035	.025	35–38	153624	6°	Damper	550	170
1963	All	N-12	BF-82②	.035	.025	35–38	153624	4°	Damper	550	170

①—Champion. ②—Autolite.

PISTONS, PINS, RINGS, CRANKSHAFT & BEARINGS

Year	Model	Fitting Pistons		Ring End Gap ①		Wrist-pin Diameter	Rod Bearings		Main Bearings			
		Shim To Use	Pounds Pull On Scale	Comp.	Oil		Shaft Diameter	Bearing Clearance	Shaft Diameter	Bearing Clearance	Thrust on Bear. No.	Shaft End Play
1961–63	All	②	②	.010	.015	.912	2.1232–2.1240	.0008–.0023	2.2482–2.2490	.0006–.0025	3	.004–.008

①—Fit rings in tapered bores for clearance listed in tightest portion of ring travel area. ②—See Piston Clearance Chart, Fig. 10.

VALVE SPECIFICATIONS

Year	Model	Valve Lash		Valve Angles		Valve Spring Installed Height	Valve Spring Pressure Lbs. @ In.	Valve Lift		Stem Clearance		Stem Diameter	
		Int.	Exh.	Seat	Face			Int.	Exh.	Intake	Exhaust	Int.	Exh.
1961–63	All	.018H	.018H	45	45	1 19/32	117 @ 1 7/32	.344	.344	.001–.0025	.002–.0035	.310	.309

STARTING MOTOR SPECIFICATIONS

Year	Model	Part No.	Brush Spring Tension, Ounces	No Load Test			Torque Test		
				Amperes	Volts	R.P.M.	Amperes	Volts	Torque Lbs. Ft.
1961	All	CODF-11001A	48–56	70	12		670	5	15.5
1962–63	6-144 Eng.		45	70	12		450	5	8
	6-170 Eng.		45	70	12		500	5	9.6

REAR AXLE AND BRAKE CYLINDER SPECIFICATIONS

Year	Model	Ring Gear & Pinion Backlash, Inch	Drive Pinion Adjustment	Drive Pinion Bearing Preload, Inch Lbs.	Drive Pinion Bearing Adjustment	Axle Shaft End Play, Inch	Hydraulic Cylinder Bore Sizes, Inch		
							Wheel Cylinder		Master Cylinder
							Front	Rear	
1961–63	All	.008–.012	Shims	②	Spacer	①	1 1/8	13/16	1

①—No adjustment.
②—17–27 inch lbs. for new bearings, 6–10 inch lbs. for used bearings.

WHEEL ALIGNMENT SPECIFICATIONS

Year	Model	Caster, Degrees		Camber, Degrees		Toe-in, Inches	Toe-out on Turns, Degrees		Steering Axis Inclination, Deg.
		Limits	Desired	Limits	Desired		Outer Wheel	Inner Wheel	
1961	All	+2 1/2 to +4	+3 1/4	+1/8 to +5/8	+3/8	1/16 to 1/8	20	21 1/2	7 1/2
1962	All	+2 3/4 to +4 1/4	+3 1/2	+1/8 to +5/8	+3/8	1/16 to 1/8	20	21 1/2	7 1/2
1963	All	+4 1/4 to +5 3/4	+5	+1/8 to +5/8	+3/8	1/16 to 1/8	20	21 1/2	7 1/2

ENGINE TIGHTENING SPECIFICATIONS★

★Torque specifications are for clean and lightly lubricated threads only. Dry or dirty threads produce increased friction which prevents accurate measurement of tightness.

Year	Spark Plugs Ft. Lbs.	Cylinder Head Bolts Ft. Lbs.	Intake Manifold Ft. Lbs.	Exhaust Manifold Ft. Lbs.	Rocker Arm Shaft Bracket Ft. Lbs.	Rocker Arm Cover Ft. Lbs.	Connecting Rod Cap Bolts Ft. Lbs.	Main Bearing Cap Bolts Ft. Lbs.	Flywheel to Crankshaft Ft. Lbs.	Vibration Damper or Pulley Ft. Lbs.
1961–63	15–20	65–75	None	13–18	30–35	3–5	19–24	65–75	75–85	45–55

DISTRIBUTOR SPECIFICATIONS

Year	Model	Distributor Part No.①	Rotation ②	Breaker Gap	Dwell Angle Deg.	Breaker Arm Spring Tension	Centrifugal Advance Degrees @ R.P.M. of Distributor		Vacuum Advance	
							Advance Starts	Full Advance	Inches of Vacuum To Start Plunger	Max. Adv. Dist. Deg. @ Vacuum
1961–62	6-144 Engine	CODF-12127A	C	.025	35–38	17–20	None	None	.33	14 @ 5.35
1962	6-170 Engine	CIDF-12127B	C	.025	35–38	17–20	None	None	.43	12 @ 3 00
1963	6-144 Engine	C3UF-12127E	C	.025	35–38	17–20	None	None	.30	12 @ 3.9
	6-170 Engine	C3UF-12127D	C	.025	35–38	17–20	None	None	.45	12 @ 3.7

①—Stamped on plate riveted to side of housing. ②—Clockwise as viewed from top.

COOLING SYSTEM & CAPACITY DATA

Year and Model	Cooling System Data					Fuel Tank Gals.	Engine Oil			Transmissions			Rear Axle Pints
	Quarts No Heater	Quarts With Heater	Rad. Cap Relief Pressure	Thermostat Opening Temp. ①	Thermostat Opening Temp. ②		Refill Qts. ③	Summer Grade	Winter Grade	Std. Pints	With Overdrive Pints	Automatic Qts.	
1961–62	8¾	10¼	13–15	180	160	14	3½	20	10W	2.5	None	None	2
1963	9	10½	13–15	180	160	14	3½	20	10W	3	None	None	2

①—For permanent type anti-freeze. ②—For alcohol type anti-freeze. ③—Add one quart with filter change.

GENERATOR AND REGULATOR SPECIFICATIONS

★To polarize generator, disconnect field lead from regulator and momentarily flash this wire to regulator battery terminal.

Year	Generator						Regulator					
	Generator Number	Ground Polarity	Rated Cap. Amps.	Gen. Field Ground Location★	Brush Spring Tension, Ounces	Field Current Amperes	Regulator Number	Cutout Relay: Voltage to Close Points	Cutout Relay: Armature Air Gap, Inch	Voltage Regulator Setting Volts	Current Regulator Setting Amperes	Current and Voltage Armature Air Gap, Inch
1961–62	CODF-10000C	Neg.	25	Internal	32–40	1.2–1.8	CODF-1050A	12.8	①	15.0	25	①
1961–62	CODF-10000D	Neg.	30	Internal	32–40	1.2–1.8	B7A-10505B	12.8	①	15.0	30	①
1963	C2DF-10000B	Neg.	25	Internal	20–26	1.2–1.8	.....	12.8	①	15.0	25	①

①—No adjustment.

Engine Section

ENGINE, REPLACE

1. Support engine compartment cover in raised position.
2. Drain cooling system and oil pan and remove air cleaner.
3. Disconnect usual items such as wires, hose, fuel and vacuum lines, carburetor linkage, etc.
4. Raise truck on hoist.
5. Remove propeller shaft.
6. Disconnect linkage at transmission.
7. Remove clutch equalizer bar and its mounting bracket.
8. Remove exhaust pipe, muffler and tail pipe as a unit.
9. Lower truck halfway down for safety in removing engine.
10. Support engine with jack.
11. Unfasten engine rear support from transmission extension housing and hanger bracket.
12. Lower jack and engine from truck.

CYLINDER HEAD, REPLACE

1. Drain cooling system, remove air cleaner and disconnect battery cable at cylinder head.
2. Disconnect exhaust pipe at exhaust manifold.
3. Disconnect carburetor linkage, fuel and vacuum lines, water hoses and wires from spark plugs.
4. Remove rocker arm cover.
5. Back off valve adjusting screws to remove load from rocker arms. Then remove rocker arm shaft assembly.
6. Remove valve push rods, keeping them in proper sequence so they are returned to proper locations.
7. Remove one bolt from each end of cylinder head at opposite corners and install cylinder head guide studs ($\frac{7}{16}$"-14 x 6").
8. Remove remaining bolts and lift off cylinder head.
9. Reverse above procedure to install the cylinder head and tighten bolts in three progressive steps as follows: Tighten bolts in the sequence shown in Fig. 1 to 55 ft. lbs. torque; then tighten them to 65 ft. lbs. Finally, tighten them to 75 ft. lbs. *Once bolts have been tightened to specifications, they should not be disturbed.*

VALVE ARRANGEMENT

Front to rear . . . E-I-I-E-I-E-E-I-E-I-I-E

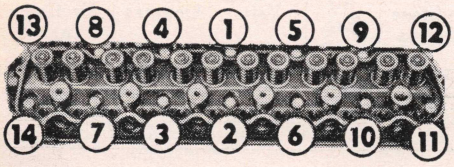

Fig. 1 Head tightening sequence

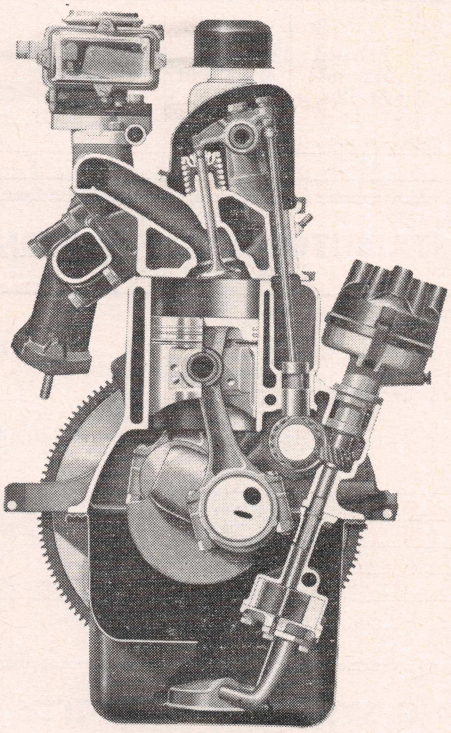

Cross section of engine

VALVES ADJUST

Before the final valve lash adjustment is made, operate the engine for 30 minutes at a fast idle to stabilize engine temperatures. To set the lash accurately, use only a step-type feeler gauge. For example, to obtain the correct setting if the clearance is .016", the .015" portion of the gauge ("go") should enter but the "no go" end (.017") should not enter.

Before starting the adjustment procedure, make two chalk marks on the crankshaft pulley. Space the marks approximately 120° apart (⅓ of circumference) so that with the timing mark the pulley is divided into three equal parts. Adjust the valves for No. 1 cylinder. Repeat the procedure for the remaining valves, turning the crankshaft ⅓ turn in the direction of normal rotation while adjusting the valves in the firing order sequence of 153624.

VALVES REMOVE

After taking off the head as outlined previously, proceed as follows:

1. Remove capscrews retaining rocker shaft brackets to head and remove shaft assembly.
2. Clean carbon out of combustion chambers before removing valves.
3. Compress valve springs with a suitable spring compressor, remove valve stem locks and release the springs. Remove sleeve, valve spring cap retainer, spring and valve. Discard intake valve seals, Fig. 2.
4. Place valves in a board with numbered holes so they can be replaced in their original positions upon reassembly.

VALVES GRIND

Clean the valves with a wire wheel brush, making sure that all carbon is removed from the top and bottom of the heads as well as the gum which might have accumulated on the stems.

In refacing valves, take off only the minimum of metal required to clean up the valve faces. If the outer edge of the valve becomes too thin or sharp due to excessive grinding, the valve must be replaced. In other words, the valve head margin must be at least $\frac{1}{32}$", otherwise the valve must be replaced.

Inspect the valve seats in the head for cracks, burns, pits, ridges or improper angle. During any general engine overhaul, it is advisable to reface the valve seats regardless of their condition.

VALVE GUIDES

Valve guides in these engines are an integral part of the head and, therefore, cannot be removed. For service, guides can be reamed oversize to accommodate one of three service valves with oversize stems (.003", .015" and .030").

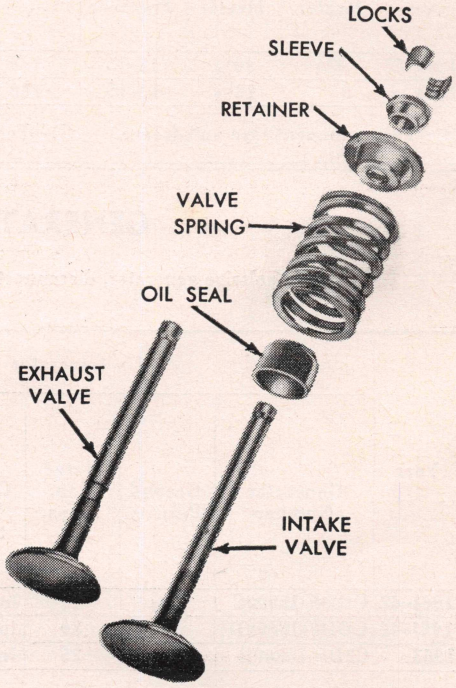

Fig. 2 Valve assembly

Check the valve stem clearance of each valve (after cleaning) in its respective valve guide. If the clearance exceeds the service limits of .004″ on the intake or .005″ on the exhaust, ream the valve guides to accommodate the next oversize diameter valve.

VALVE SPRING INSTALLED HEIGHT

When valves and seats are reground the position of the valve in the head is changed so as to lessen the valve spring tension. Without proper valve spring tension the valve does not seat long enough or it may not seat completely. Since the valve is cooled by transferring heat from the valve head to the seat and thence to the coolant, improper valve spring tension will cause worn, pitted and distorted valves which result in loss of compression and power as well as poor gasoline mileage.

When valves, springs, retainers and locks are installed, measure the assembled height of the valve springs from the surface of the cylinder head spring pad to the underside of the spring retainer as shown in Fig. 3. If the assembled height is greater than the dimension given in the *Valve Specifications Chart,* install a spacer or shim of proper thickness between cylinder head spring pad and spring to bring the assembled height to specifications.

Do not install spacers unless necessary. Excessive use of spacers will result in overstressing valve springs and overloading camshaft lobes which could lead to spring breakage and worn camshaft lobes.

GRINDING VALVE STEMS

For Proper Lifter Clearance

If a valve grind job is needed, and if shims are found under the valve springs, very likely the valves, if reground, would not leave sufficient margin on the valve head for satisfactory operation. Since the maximum thickness of shimming that can be used satisfactorily is 1/16″, and since the acceptable valve head margin is approximately 1/16″ to 3/32″, one can readily see that there would be insufficient margin left on the valve head if it was reground. Therefore, it is recommended that new valves be installed.

After grinding the valves, if shims are required to restore the correct valve spring installed height, *the valve stem should be ground off the same amount as the thickness of shims required. This will automatically provide the proper static clearance between the hydraulic lifter and the push rod.*

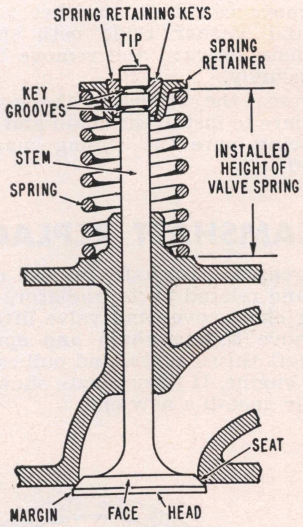

Fig. 3 Checking installed height of valve spring

VALVE SPRING TESTING

After taking out the valve springs, wash them with gasoline or other suitable solvent. Examine the springs for damage or corrosion due to acid etching, which will develop into surface cracks and cause spring failure.

Check the valve spring tension on a spring testing fixture, if one is available, Fig. 4, and according to the specifications given in the *Valve Data Chart.* If a fixture is not available, at least check the free length of each spring by standing it alongside a new spring. Any spring that does not conform to the pressure specifications within 10% should be replaced. Likewise, any spring that stands shorter than the new spring used for comparison should be discarded. Of course, cocked springs should also be scrapped.

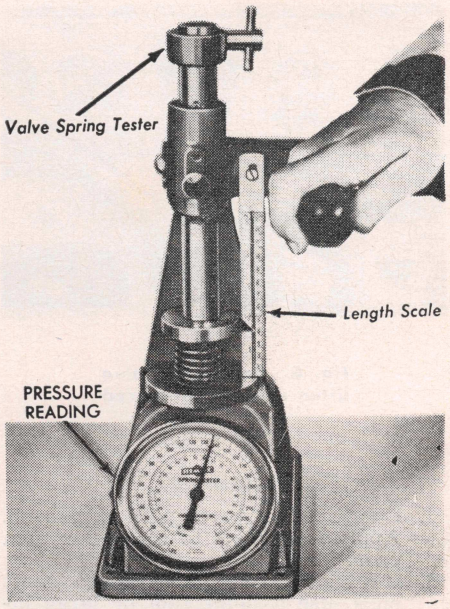

Fig. 4 Checking valve spring pressure

ROCKER ARMS REPLACE

1. To disassemble, remove pin and spring washer from each end of rocker shaft, Fig. 5.
2. Slide rocker arms, springs and supports off the shaft, being sure to identify location of parts for reassembly.
3. If it is necessary to remove the plugs from the shaft ends, drill or pierce the plug on one end. Then use a steel rod to knock out the plug on the opposite end. Working from the open end, knock out the remaining plug.

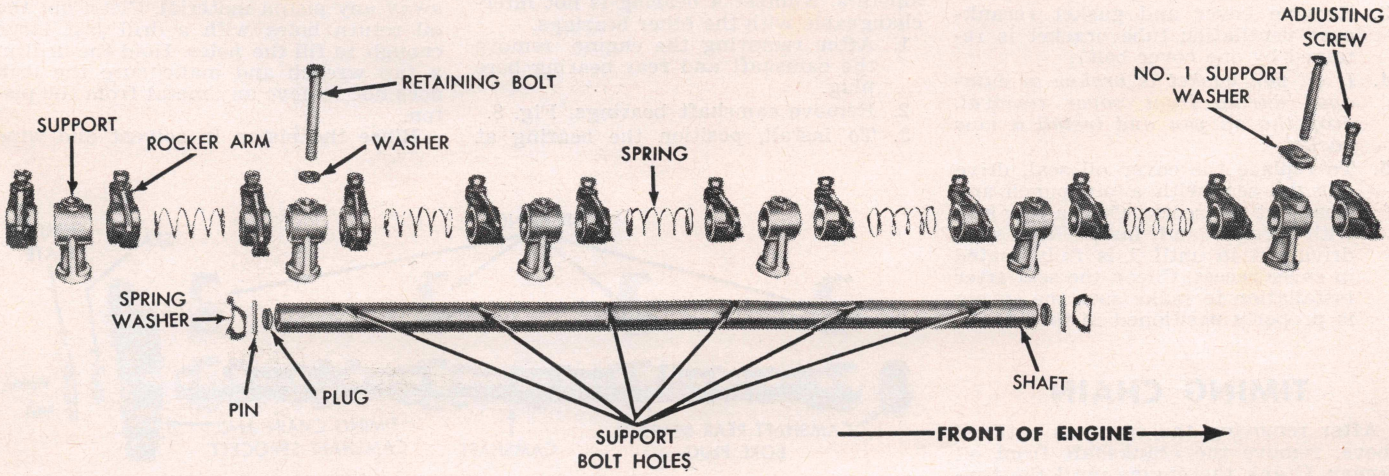

Fig. 5 Rocker arm shaft assembly

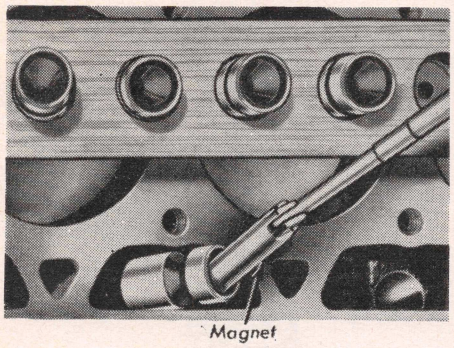

Fig. 6 Removing valve lifter using magnet rod

Assemble

1. Lubricate all parts with engine oil. Apply Lubriplate to the rocker arm pads.
2. If plugs were removed from shaft ends, use a blunt tool or large diameter pin punch and install a plug (cup side out) in each end of shaft.
3. Install spring washer and pin on one end of shaft.
4. Install rocker arms, supports and springs in order shown in Fig. 5. *Be sure oil holes in shaft are facing downward.*
5. Complete the assembly by installing remaining spring washer and pin.

VALVE LIFTERS, REPLACE

When necessary to replace the lifters, remove the cylinder head and related parts as outlined previously. Using a magnet, remove and install one lifter at a time, Fig. 6.

When installing, apply Lubriplate to each lifter foot and coat the remainder of the lifter with engine oil before installation.

TIMING CASE COVER

1. To remove cover, drain cooling system.
2. Remove radiator, fan and pulley, and crankshaft pulley.
3. Remove cover and gasket (crankcase ventilation tube bracket is retained by one cover bolt).
4. *If oil pan gasket is broken or damaged during front cover removal, drop the oil pan and install a new gasket.*
5. To replace the cover oil seal, drive out the seal with a pin punch and clean out the recess. Coat a new seal with grease and install the seal, driving it in until it is fully seated in cover recess. Check the seal after installation to make sure the spring is properly positioned in the seal.

TIMING CHAIN

After removing the cover as outlined above, remove the crankshaft front oil slinger. Crank the engine until the timing marks are aligned as shown in Fig.

7. Remove camshaft sprocket retaining bolt and washer. Slide both sprockets and chain forward and remove them as an assembly.

Reverse the order of the foregoing procedure to install the chain and sprockets, being sure the timing marks are aligned.

CAMSHAFT REPLACE

To remove camshaft, remove cylinder head and related parts, radiator, oil pan, timing chain cover and valve lifters.

Remove timing chain and sprockets, camshaft thrust plate, and pull camshaft out of engine. If thrust plate shows signs of wear, install a new one.

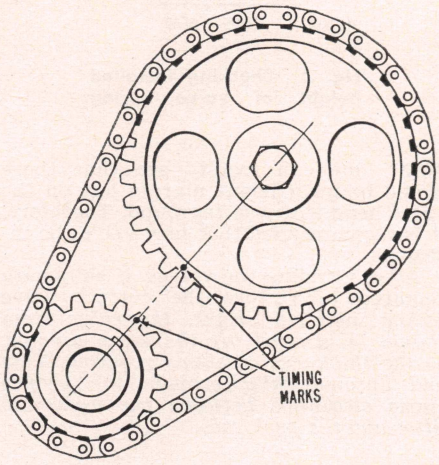

Fig. 7 Timing marks aligned for correct valve timing

CAMSHAFT BEARINGS REPLACE

To install new bearings it will be necessary to remove the engine from the vehicle. Bearings are available pre-finished to size and require no reaming for standard and .015″ undersize journal diameters. Number 4 bearing is not interchangeable with the other bearings.

1. After removing the engine, remove the camshaft and rear bearing bore plug.
2. Remove camshaft bearings, Fig. 8.
3. To install, position the bearing at the bearing bore and press it in place. *No. 1 bearing must be pressed in .100-.140″ below front face of bearing bore. Press the remaining bearings in sufficiently to align the oil supply holes.*
4. Clean camshaft rear bearing bore plug recess and install a new plug.
5. Install parts removed and install engine in car.

PISTONS & RODS REMOVE

After removing the cylinder head and oil pan, use a ridge reamer to remove any ridge that may have formed on the cylinder wall at the top of the piston ring travel. Cutting the ridge before the piston is removed will avoid damaging rings or cracking ring lands of pistons during removal.

Remove the connecting rod cap and push the piston and rod out through the top of the bore. Use care to prevent the rod from nicking crankshaft journals. Identify the connecting rods (original rods are marked) when removing them so they may be installed in their original cylinder.

PISTON & ROD ASSEMBLE

When installed, piston and rod assembly should have the notch in piston head toward front of engine with oil squirt hole in rod positioned as shown in Fig. 9.

PISTONS

Pistons are available for service replacement in standard sizes and oversizes of .020″, .030″, .040″ and .060″.

If the pistons are to be re-used with new rings, remove the carbon from the ring grooves. A special tool is available for this work but a satisfactory job can be done by breaking an oil piston ring. File the broken end to a sharp, square edge and use it to scrape out the carbon. Soak the piston in cleaning solvent to loosen any carbon residue. Clean out the loosened carbon, being careful not to cut away any piston material. Clean out the oil return holes with a drill just large enough to fill the holes. Hold the drill in a tap wrench and make sure the drill does not remove any metal from the piston.

Rinse the piston in solvent and wipe

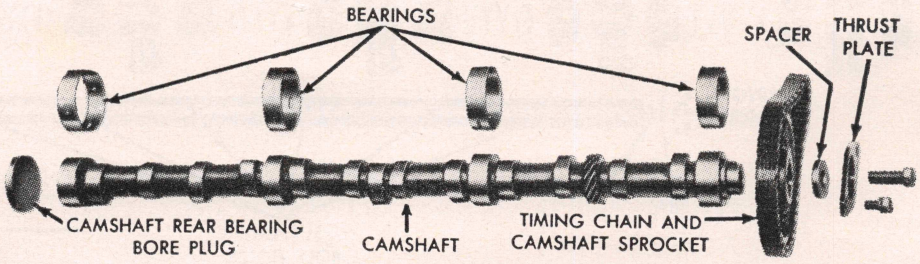

Fig. 8 Camshaft and related parts

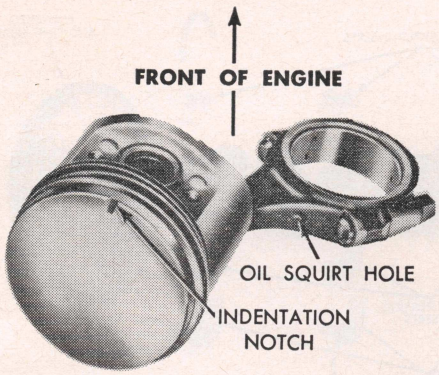

Fig. 9 Piston and rod assembly

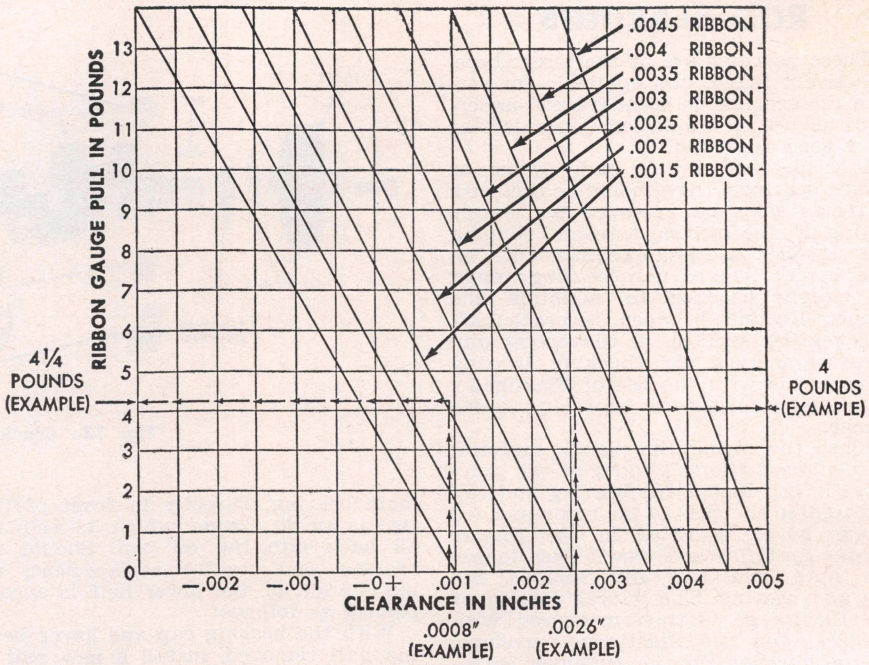

Fig. 10 Piston clearance chart

off the carbon on the sides of the piston. *Never use a wire brush to clean a piston as the brush will round off the edges of the ring lands.* Pistons showing scuffed or scored skirts should be discarded for new ones. Examine the ring lands carefully for cracks. If in the least bit doubtful, the piston should be scrapped.

New pistons should be fitted according to the recommendations given in Fig. 10.

PISTON PINS

The piston pin bore of the connecting rod must be within the limits of .9107-.9112". The diameter of the piston pin must be within the limits of .9120-.9123".

Apply a light coat of engine oil to all parts. Assemble the piston to the connecting rod as shown in Fig. 9. Start the piston pin in the piston and connecting rod. Use the equipment shown in Fig. 11 and draw the pin through the piston and rod until end of pin seats in Detail 2, Fig. 11. If this equipment is not available, the pin may be installed with a suitable press.

PISTON RINGS

New rings should be assembled on the piston according to the instructions furnished by the ring manufacturer. Always use standard size rings in cylinder bores that are *standard at the bottom, regardless of the amount of cylinder wear.*

When new rings are installed without reboring cylinders the glazed cylinder walls should be slightly dulled, but without increasing the bore diameter. This is done with a "Glaze-buster" or with a hone equipped with the finest grade of stones.

New rings must be checked for clearance in piston grooves and for gap in cylinder bores. Cylinder bores and piston grooves must be clean, dry and free of carbon and burrs.

Check the clearance of each ring in its piston groove by installing the ring and then inserting feeler gauges *under* the ring. Any wear that occurs in the piston groove forms a step or ridge at the inner portion of the lower land. If gauges are inserted above the ring, the ring may rest on the step instead of on the worn portion of the lower land, and a false measurement of clearance will result.

If the piston grooves are worn to the extent that relatively high steps or ridges exist on the lower lands, the piston should be replaced because the steps will interfere with the operation of the new rings and the ring clearances will be excessive. Piston rings are not furnished in oversize widths to compensate for ring groove wear.

To check the end gap of rings, place the ring in the cylinder in which it will be used. Square it in bore by tapping with the lower end of the piston. Then measure the gap with feeler gauges. If necessary to increase the gap, file the ends of the rings carefully with a smooth file.

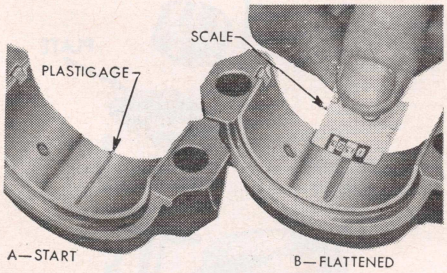

Fig. 12 Checking rod bearing clearance with Plastigage

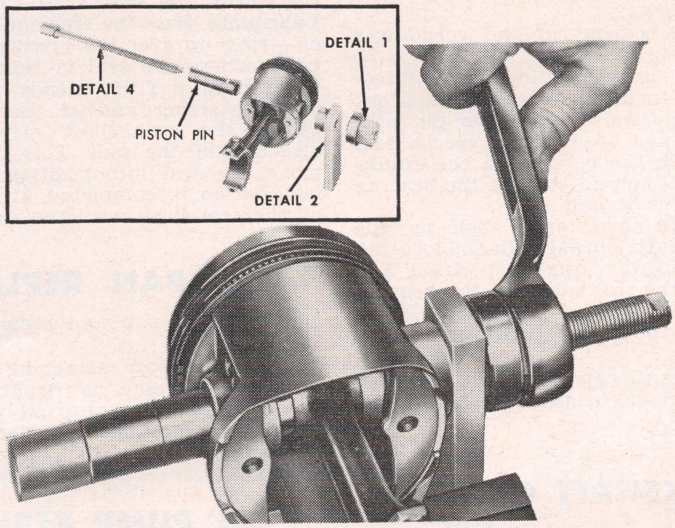

Fig. 11 Piston pin installation

ROD BEARINGS

These bearings are of the insert type, selectively fitted, and available for service replacement in standard and undersizes for use on crankshaft journals that have been reground.

If inspection reveals badly worn or scored bearings, they should be replaced. Bearings may be removed by simply taking off the bearing caps and slipping the old ones out and the new ones in. The installation of new bearings must be closely checked to maintain the proper clearance between the crankshaft and bearing surface. A convenient and accurate method for checking bearing clearance is with the use of Plastigage, which is available at any auto parts jobber.

Place the string-like plastic material so it extends the full width of the bearing, Fig. 12. Install the bearing and cap and tighten the nuts to the recommended torque which is listed in the *Engine Torque Specifications* chart. Then loosen the nuts and carefully remove the cap and bearing. The widest portion of the Plastigage is then measured with the scale on the Plastigage envelope. The graduation on the envelope corresponding to the thickness of the Plastigage gives the bearing clearance in thousandths of an inch.

MAIN BEARINGS

Caution—Main bearing clearance can be checked with Plastigage in the same manner described for rod bearings. If bearings are measured with the engine in the chassis, the crankshaft must be supported in order to take up clearance between the upper bearing insert and crankshaft journal. This can be done by tightening bearing caps of adjacent bearings with .005" to .015" cardboard, (such as a calling card) between lower bearing shell and journal. Use extreme care when this is done to avoid unnecessary strain on the crankshaft or bearings or a false reading may be obtained. Do not rotate crankshaft while Plastigage is installed. *Be sure to remove cardboard.* To install new bearings, proceed as follows:

1. Remove bearing cap and worn lower shell, Fig. 13.
2. Rotate crankshaft in normal direction to turn upper bearing shell out of crankcase. Use a cotter pin with a flattened head or the special tool made for the purpose in the crankshaft oil hole to contact the bearing and force it out.
3. Place a new upper shell on the crankshaft journal with the locating notch in the correct position and rotate the shaft to turn the bearing in place.
4. Install the lower bearing shell in the cap.
5. Tighten all cap nuts to the torque value given in the *Engine Torque* table.

CRANKSHAFT OIL SEAL

A braided oil seal is pressed into the upper and lower grooves behind the rear main bearing. Directly in front of this seal is an oil slinger which deflects the oil back into the oil pan. Should the braided seal require replacement, the installation of the lower half is accomplished as follows:

With the bearing cap and lower bearing half removed, install a new seal so that both ends protrude above the cap. Tap the seal down into position or roll it snugly in its groove with a smooth rounded tool. Then cut off the protruding end of the seal with sharp knife or razor blade.

Installing Upper Seal

Although the usual practice is to remove the crankshaft when the upper half of the seal is to be replaced, it is possible to do the job without removing the crankshaft as follows:

To remove the old seal, use needle-nose pliers to grasp the end of the seal which is most accessible. Pull the seal downward while rotating the crankshaft slowly in the direction that the seal is being moved.

To install the new seal, fasten a length of wire or strong string such as fishing line securely to one end of the new seal. See that the point of fastening is not bulky and that it is not over 3/8" from the end of the seal. Coat the seal with Lubriplate. Pass the free end of the wire or string up over the crankshaft at the point where the seal is being installed. Then exert a firm, steady pull on the wire or string and at the same time rotate the crankshaft slowly in the direction of the pull. This will help to move the seal into position. When the installation is completed, trim the ends of the seal flush with the engine block.

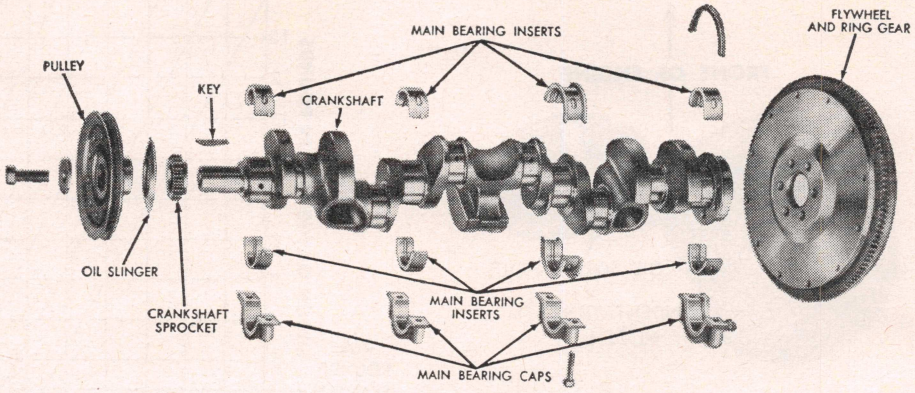

Fig. 13 Crankshaft and related parts

OIL PAN, REPLACE

1. Drain oil pan and remove oil level dipstick.
2. Remove pan attaching bolts and rotate engine as required to gain clearance and drop oil pan.
3. Remove oil pump inlet tube and screen.

OIL PUMP REPLACE

1. Remove oil pan as directed above.
2. Remove pump pick-up tube and screen.
3. Unfasten and remove pump from engine.
4. Reverse order of removal to install.

OIL PUMP REPAIRS

Referring to Fig. 14, disassemble pump. To remove the oil pressure relief valve, insert a self-threading sheet metal screw of the proper diameter into the oil pressure relief valve chamber cap and pull cap out of chamber. Remove spring and plunger.

The inner rotor and shaft and the outer race are serviced as an assembly. One part should not be replaced without replacing the other.

Install the pump cover and tighten to 6-9 ft. lbs. torque.

RADIATOR

1. Working from inside truck, remove engine access cover.
2. Drain cooling system.

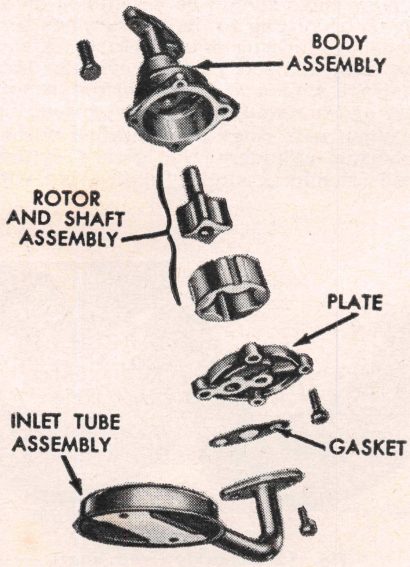

Fig. 14 Oil pump assembly

3. Disconnect hoses from radiator.
4. Remove radiator support bolts.
5. From driver's seat, back out two bolts that attach engine compartment front end panel to side panel. This permits radiator to be rotated and removed.

WATER PUMP REPLACE

Drain cooling system and remove lower hose at water pump. Remove drive belt, fan and water pump pulley. Disconnect heater hose at water pump. Unfasten and remove water pump.

WATER PUMP REPAIRS

To disassemble pump, refer to Fig. 15 and remove hub from impeller shaft. Press shaft and bearing out of housing. Remove impeller from shaft.

To assemble, clean all gasket material from pump. If a new shaft is used, install the slinger on the shaft in the same relative position as the old slinger. Coat the bearing outer diameter with grease and press the shaft into the housing. Apply a light film of waterproof sealer on a new seal and press seal into housing. Install impeller. Lightly coat seal rubbing face of impeller with grease, then press shaft onto impeller.

Press shaft into impeller just far enough so that pump housing lightly touches face of adapter ring. The impeller-to-pump body clearance should be 005-025" after impeller is installed.

Press water pump onto shaft until there is $3\frac{15}{16}$" from gasket surface to outside surface of pump hub.

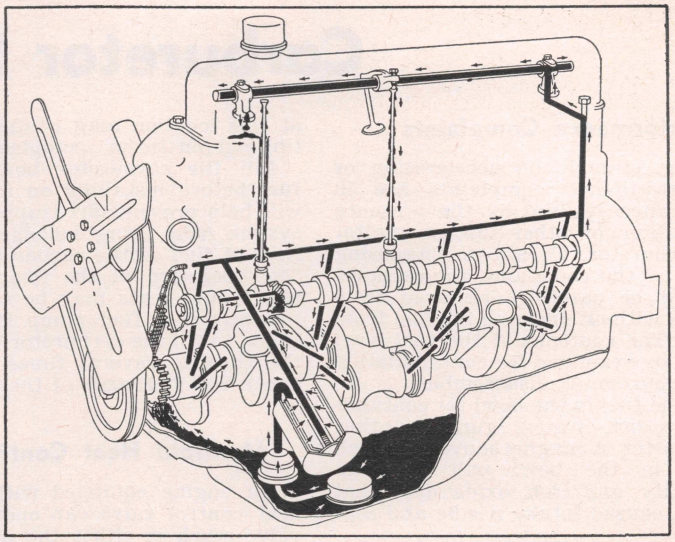

Engine lubrication diagram. 6-144 and 6-170 engines

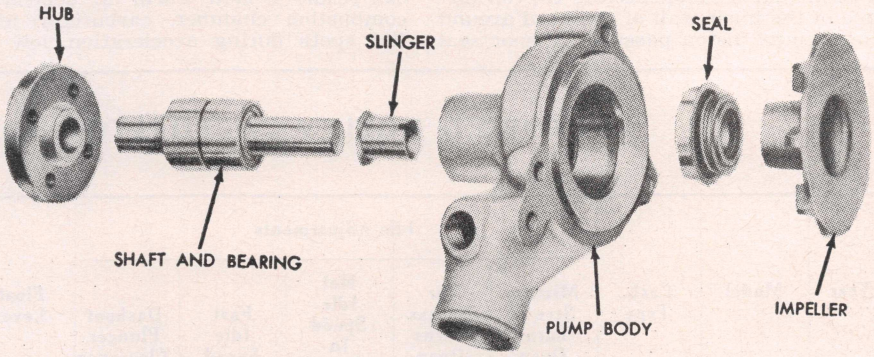

Fig. 15 Water pump assembly

DISTRIBUTOR REPLACE

1. To remove the distributor, disconnect the primary wire and vacuum control pipe.
2. Remove distributor cap.
3. Scribe a mark on the distributor body indicating the position of the rotor, and scribe another mark on the body and engine block indicating position of distributor body in block. These marks can be used as guides when installing distributor in a correctly timed engine.
4. Remove hold down screw or screws and lift distributor out of block. *Do not crank engine while distributor is removed or the initial timing operation will have to be performed.*

Installation

If the crankshaft has not been disturbed, install the distributor, using the scribed marks previously made on the distributor body and engine block as guides.

If the crankshaft has been rotated while the distributor was removed from the engine, it will be necessary to retime the engine. Crank the engine to bring No. 1 piston on top dead center of its compression stroke. Align the timing mark on the crankshaft pulley with the timing pointer (see *Tune Up* chart). Install the distributor so that the rotor points to the No. 1 spark plug wire terminal in the distributor cap.

Make sure the oil pump intermediate shaft properly engages the distributor shaft. It may be necessary to crank the engine with the starter, after the distributor drive gear is properly engaged, in order to engage the oil pump intermediate shaft.

IGNITION TIMING

If a timing light is to be used to set ignition timing, disconnect the vacuum advance pipe to the carburetor and place a piece of tape over open end of pipe. *This is important as carburetor trouble can affect timing adjustments.*

Lacking a power timing light, an accurate method of setting ignition timing with the engine stopped is with the aid of a jumper light. Be sure to use a light bulb that corresponds with the system voltage of the vehicle.

1. Remove distributor cap and rotor and see that the breaker gap is set according to specifications.
2. Rotate engine until No. 1 cylinder is at the ignition timing point as indicated by the timing pointer and timing mark being lined up with each other.
3. Connect the jumper light between distributor ignition terminal and ground.
4. Turn on ignition switch.
5. Loosen distributor and turn it in the direction of normal rotation until the points just close (light out). Then slowly turn distributor in the opposite direction just to the exact point that the light goes on. Tighten distributor in this position.

STARTER REPLACE

Disconnect cable at starter. Unfasten and remove starter and rubber dust ring.

When installing the starter snug all bolts, then tighten them starting from the middle bolt.

Carburetor Section

Performance Complaints

Flooding, stumble on acceleration or other performance complaints are in many instances caused by the presence of dirt, water or other foreign matter in the carburetor. To aid in diagnosing the cause of the complaint, the carburetor should be carefully removed from the engine without draining the fuel from the bowl. The contents of the fuel bowl may then be examined for contamination as the carburetor is disassembled.

Check the fuel in the bowl for contamination by dirt, water, gum or other foreign matter. A magnet moved through the fuel in the bowl will pick up and identify any iron oxide dust that may have caused intake needle and seat leakage.

Inspect gasket surfaces. Small nicks or burrs should be smoothed down to eliminate air or fuel leakage. On carburetors having a vacuum piston, be especially particular when inspecting the top surface of the inner wall of the bowl around the vacuum piston passage. A poor seal at this location may contribute to "cutting-out on turns" complaint.

Fill the carburetor bowl with clean fuel before installing on manifold. This will help prevent dirt trapped in the fuel system from being dislodged by the free flow of fuel as the carburetor is primed. The operation of the floats and intake needle and seats may be checked under pressure if a fuel pump is used at the bench to fill the carburetor bowl. Operate the throttle several times and visually check the discharge of the pump jets.

Manifold Heat Control Valve

An engine equipped with a manifold heat control valve can operate with the valve stuck in either the open or closed position. Because of this an inoperative valve is frequently overlooked at vehicle lubrication or tune-up.

A stuck valve in the "heat-off" position can result in slow warm up, deposits in combustion chamber, carburetor icing, flat spots during acceleration, low gas mileage and spark plug fouling.

A valve stuck in the "heat-on" position can result in power loss, engine knocking, sticking or burned valves and spark plug burning.

To prevent the possibility of a stuck valve, check and lubricate the valve each time the vehicle is lubricated or tuned-up. Check the operation of the valve manually. To lubricate the valve, place a few drops of penetrating oil on the valve shaft where it passes through the manifold. Then move the valve up and down a few times to work in the oil. *Do not use engine oil to lubricate the valve as it will leave a residue which hampers valve operation.*

Positive Crankcase Ventilation

When there is a complaint of carburetor troubles and the car is equipped with a Positive Crankcase Ventilator Unit, it is advisable first to check the operation of this unit before servicing the carburetor. For data on this unit, see the *Tune Up Chapter.*

FORD & HOLLEY CARBURETOR ADJUSTMENTS

Year	Model	Carb. Type	Idle Adjustments					Float Level	Fuel Level	Float Bowl Vent Valve	Pump Override Spring	Choke Unloader	Choke Setting
			Mixture Screws Turns Open	Air Bypass Turns Open	Hot Idle Speed In Neutral	Fast Idle Speed	Dashpot Plunger Clearance						
1961–62	All	1 Bore	1½	None	550	None	None	11/64 ①	23/32 ②	None	None	None	None
1963	All	1 Bore	3–4	None	550	None	None	1″ ③	None	None	None	None	None

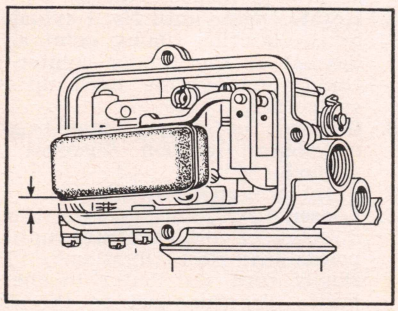

Fig. ①—Float level measured from roof of float chamber to lowest point of float with carburetor inverted.

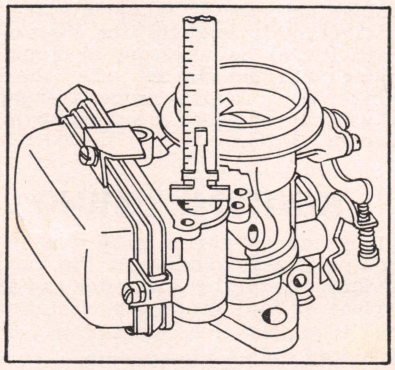

Fig. ②—Fuel level measured from power valve mounting surface.

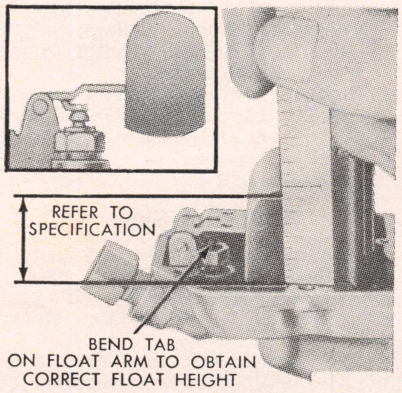

Fig. ③—Measure from bottom of float to air horn, with air horn inverted.

Clutch & Transmission Section

CLUTCH

Pedal Free Travel

Clutch pedal free travel should be 7/8" to 1 1/8". If not within these limits, loosen nut on turnbuckle on clutch release rod and adjust turnbuckle as required to obtain correct free pedal travel.

Clutch, Replace

1. Remove starter motor.
2. Remove transmission.
3. Disconnect clutch release lever retracting spring and release rod.
4. Remove clutch release bearing and hub.
5. Remove flywheel housing and dust cover.
6. Remove clutch from flywheel.
7. Reverse removal procedure to install and adjust clutch pedal free travel.

TRANSMISSION

Transmission, Replace

1. Raise truck on hoist.
2. Remove drive shaft.
3. Disconnect speedometer cable.
4. Disconnect gearshift rods from transmission shift levers.
5. Position jack under engine and remove transmission rear support anchor bolt.
6. Lower engine enough to drop transmission extension housing from hanger bracket.
7. Unfasten transmission from flywheel housing and remove.
8. Reverse removal procedure to install transmission.

1963 TRANS. REPAIRS

1963 V8s

1. To disassemble the transmission, Fig. 1, remove bottom drain plug and drain lubricant.
2. Remove parts shown in Fig. 2.
3. Remove filler plug from right side of case and drive out the countershaft retainer, Fig. 3. Lower countershaft assembly to bottom of case.
4. Lift input shaft gear and shaft from front of case, being careful not to drop needle bearings from bore of input shaft.
5. Slide speedometer drive gear from mainshaft and remove the drive gear lock ball from shaft.
6. Use a suitable puller to remove mainshaft rear bearing.
7. Place both shift levers in neutral position.
8. Remove plug that retains detent plunger and spring in case and remove these parts, Fig. 4.
9. Remove shift fork components.
10. Lift mainshaft assembly out through top of case.
11. Working through front bearing opening, drive reverse idler gear shaft out through rear of case with a drift. Then lift reverse idler gear and two thrust washers from case.
12. Lift countershaft and thrust washers from case, using a dummy shaft to hold needle bearings in place.
13. Remove shift levers and shafts, Fig. 5.
14. Remove snap ring from front end of mainshaft and slide synchronizer and second speed gear off shaft.
15. Remove snap ring and thrust washer from mainshaft and slide first speed gear and blocking ring off shaft.
16. Remove the next snap ring and slide reverse gear and sleeve from shaft.
17. Remove dummy shaft, needle bearings and two retainer washers from countershaft gear.
18. Disassemble synchronizers.
19. Assemble the transmission in the reverse order of disassembly, referring to Figs. 2 through 10. Countergear and reverse idler gear end play should be .004 to .018". Replace thrust washers as required to obtain this end play.

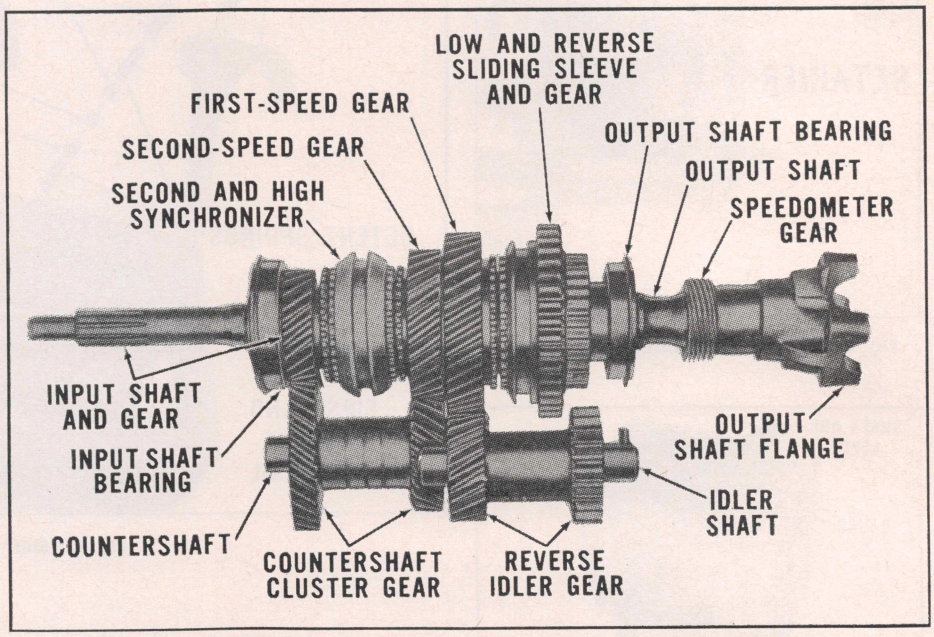

Fig. 1 Transmission gear train. 1963

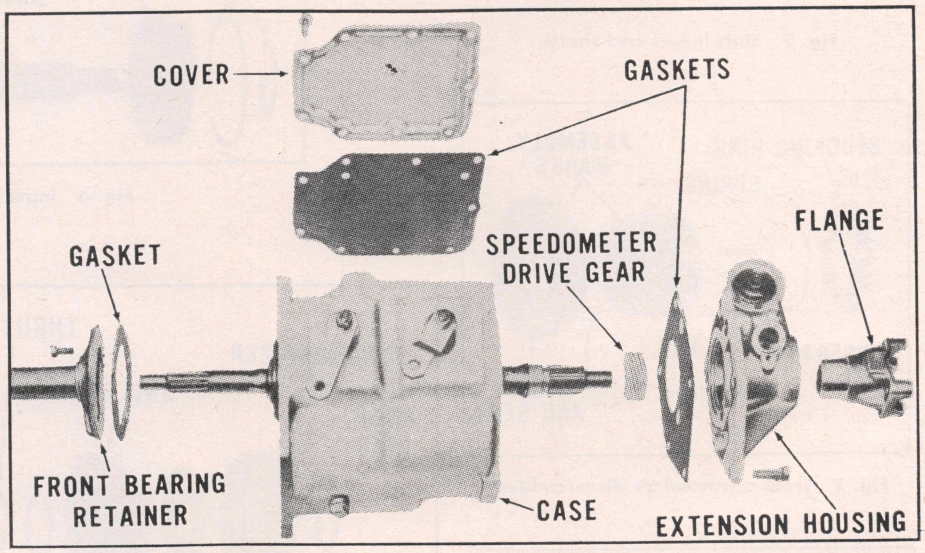

Fig. 2 Removal of external parts

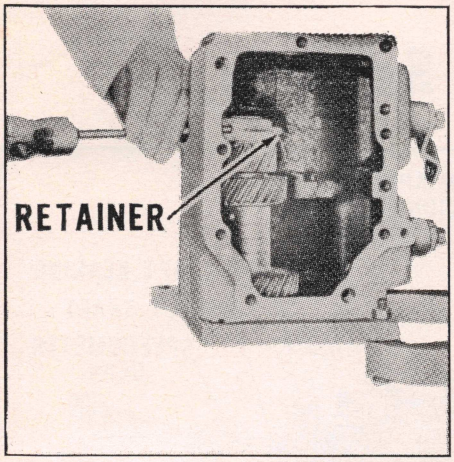

Fig. 3 Driving out countershaft retainer

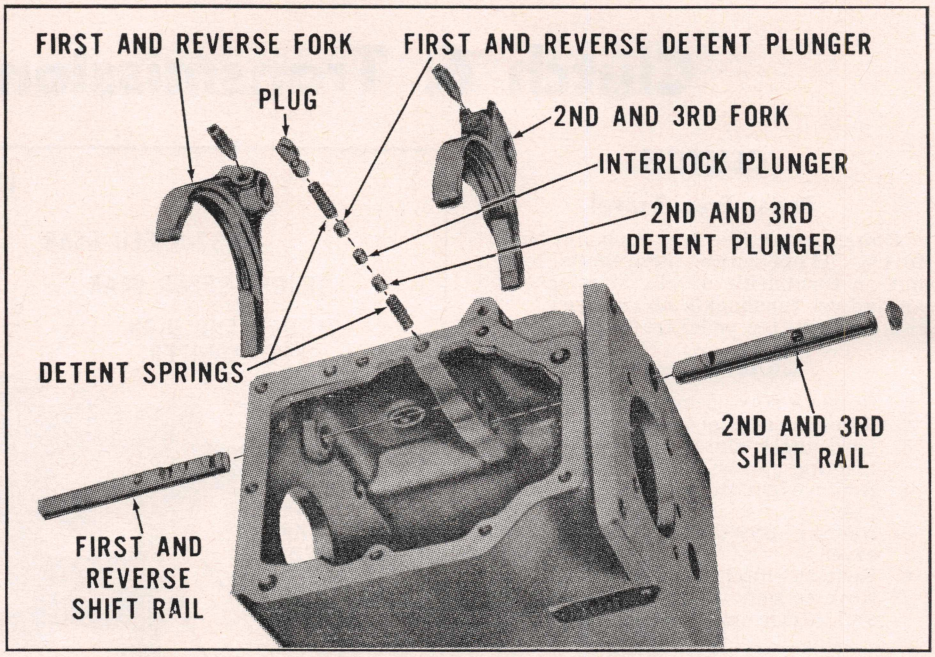

Fig. 4 Shift fork components

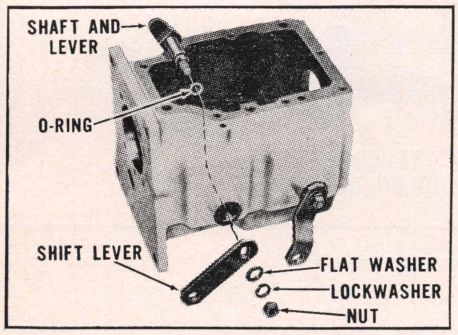

Fig. 5 Shift levers and shafts

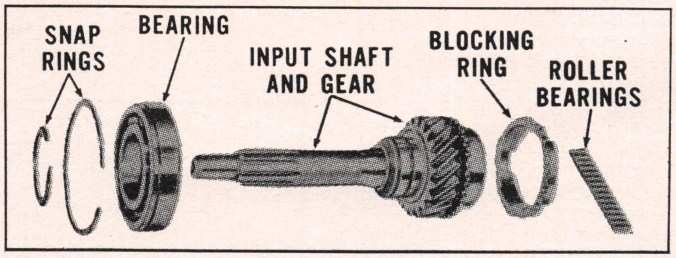

Fig. 6 Input shaft disassembled

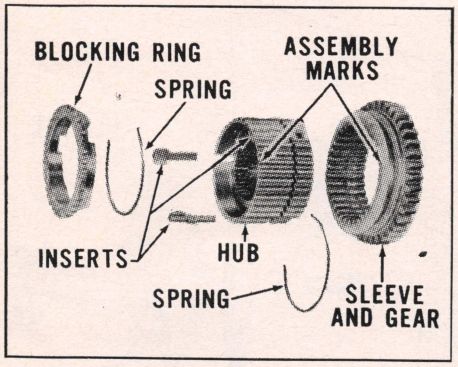

Fig. 8 Front synchronizer disassembled

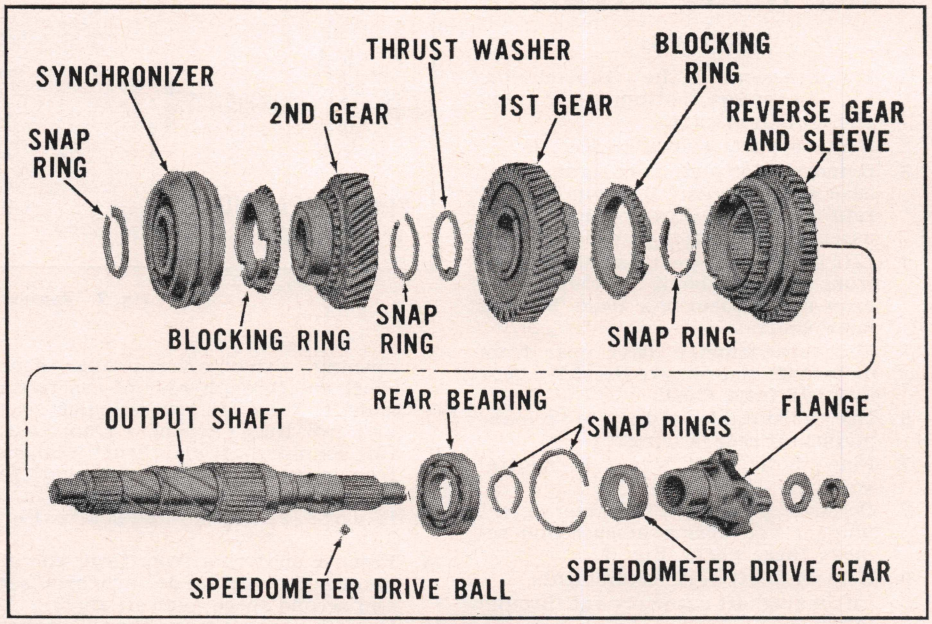

Fig. 7 Mainshaft disassembled

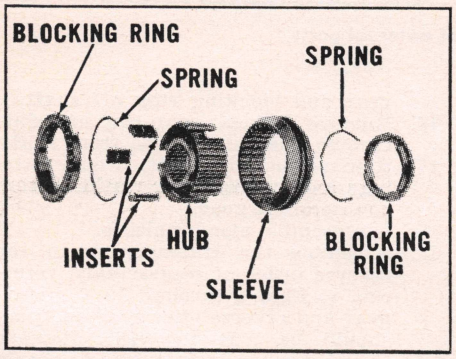

Fig. 9 Rear synchronizer disassembled

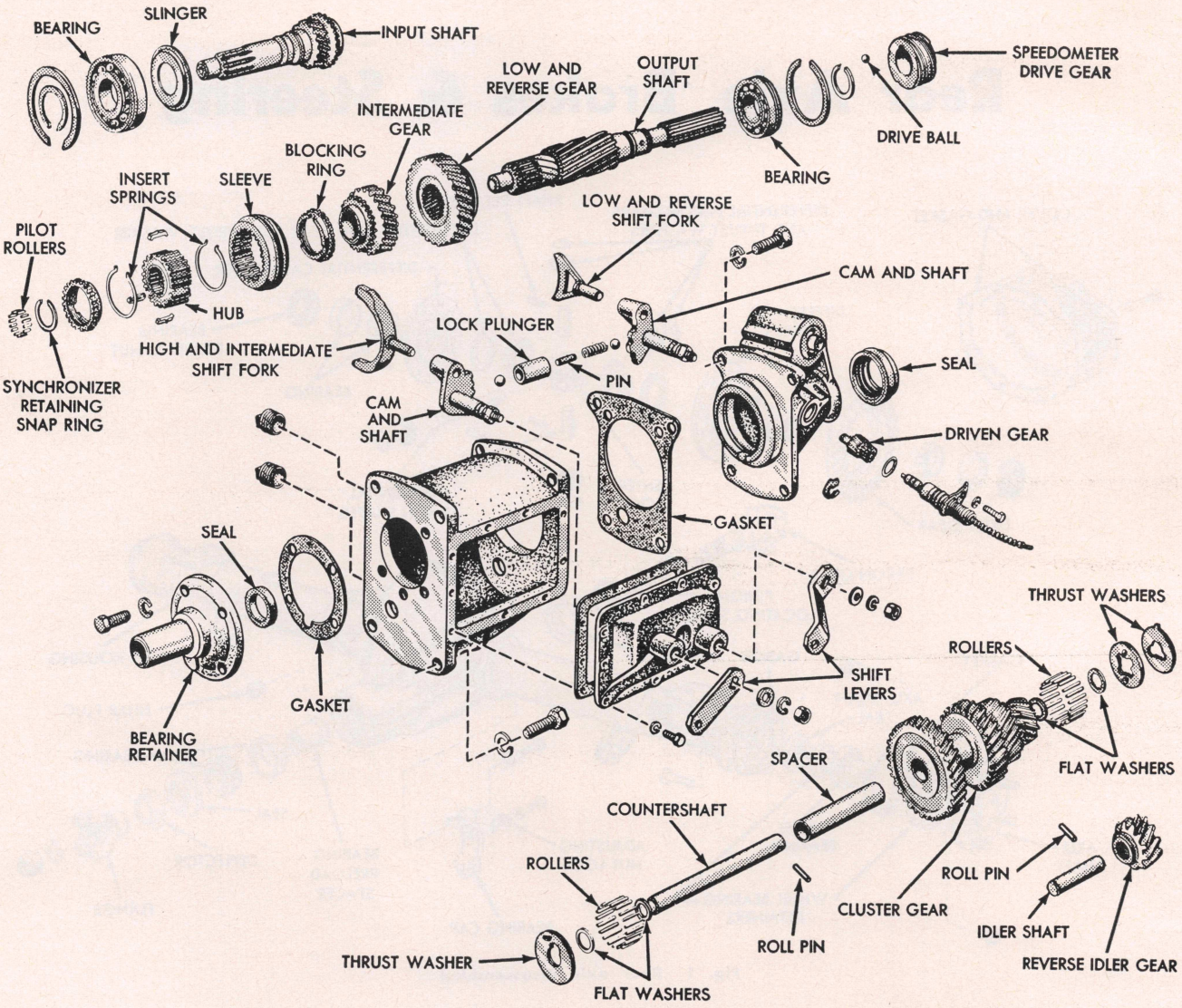

Fig. 11 Transmission disassembled. 1961-62

1961-62 TRANS. REPAIRS

1. Referring to Fig. 11, remove gearshift housing. Lift shift forks from gears.
2. Remove 4 extension housing bolts.
3. Remove input shaft bearing retainer.
4. Slide input shaft forward to disengage from synchronizer.
5. Slide synchronizer and 2nd speed gear forward to disengage the latter from cluster gear.
6. Remove extension housing and mainshaft.
7. Remove synchronizer hub snap ring from mainshaft and remove synchronizer, 2nd gear and sliding gear.
8. Remove mainshaft bearing snap ring from extension housing and remove housing.
9. Remove speedometer gear and ball from mainshaft.
10. Using brass drift, drive reverse idler shaft and roll pin out of case. Lift gear from case.
11. Drive countershaft rearward out of case and allow cluster gear to fall in case.
12. Remove input shaft assembly.
13. Lift out cluster gear.
14. Reverse disassembly procedure to assemble transmission, referring to Fig. 11.

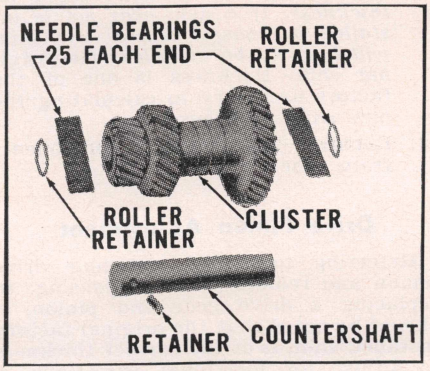

Fig. 10 Countershaft disassembled

Gearshift Linkage, Adjust

If transmission shifts hard or if it will not engage, the gearshift levers require adjustment at the cross-over. Move shift lever through all positions. If cross-over is not smooth, adjust as follows:

1. Loosen trunnion nuts at transmission shift levers to allow shift rods to slide freely in their trunnion.
2. Insert a ¼″ rod through pilot hole in shift tube floor-mounted bracket until it enters adjustment hole of both upper and lower shift lever.
3. Place transmission shift lever in neutral and tighten trunnion nuts.
4. Remove ¼″ rod and check transmission operation in all shift positions.

Rear Axle, Brakes & Steering

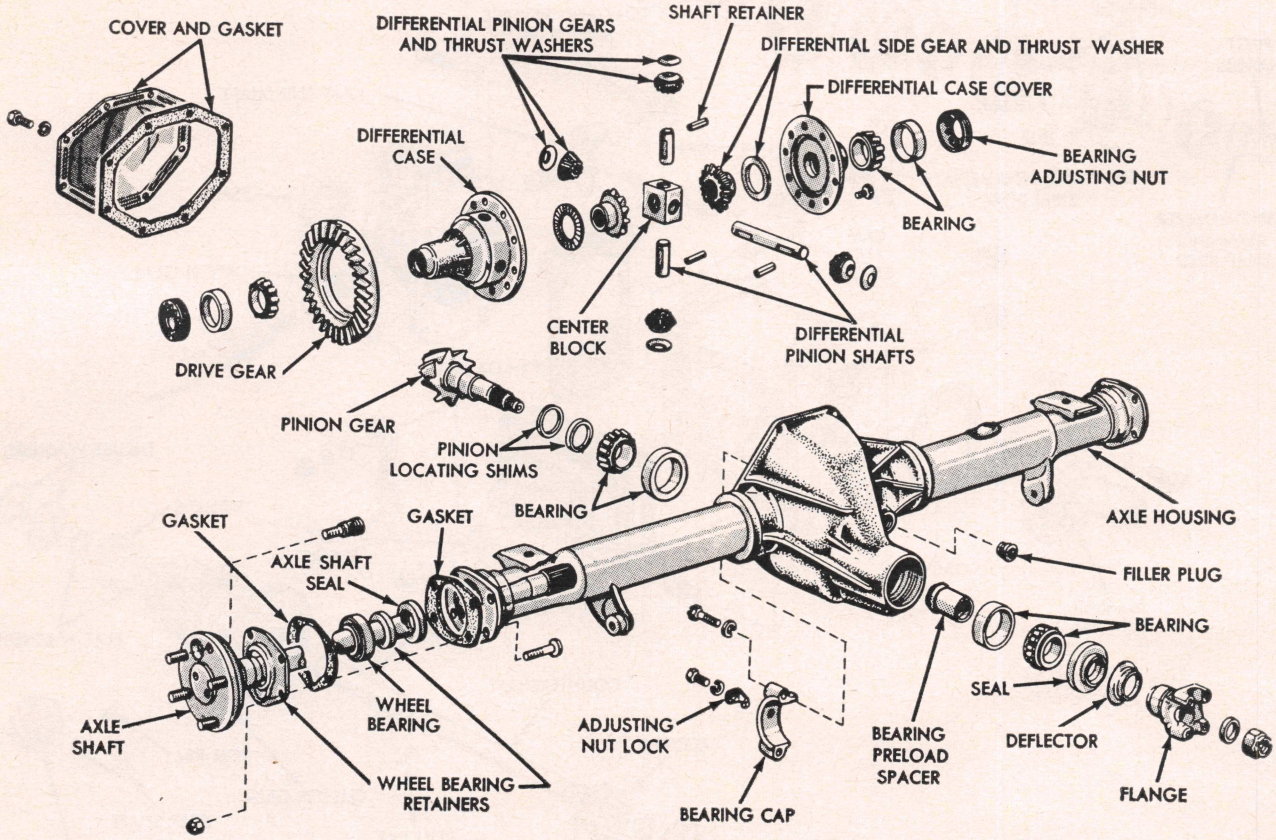

Fig. 1 Rear axle disassembled

REAR AXLE

All operations on the differential case assembly and drive pinion assembly may be performed with the axle housing in the truck, Fig. 1.

Differential & Pinion, Remove

1. Remove axle shafts as outlined further on.
2. Remove axle housing cover.
3. Remove drive shaft.
4. Mark one differential bearing cap and case so marks can be matched on reassembly.
5. Remove differential bearing adjusting nut locks, cap bolts and bearing caps.
6. Lift out differential.
7. Remove drive pinion flange nut and flange. With soft-faced hammer, drive pinion out of front bearing cone and remove it through rear of carrier casting.
8. Drive against front pinion bearing cone and drive flange seal and bearing cone out of front of carrier casting.
9. If they are to be replaced, drive pinion bearing cups out of casting with a drift. *When installed, make sure cups are properly seated in their bores. If a .0015" feeler gauge can be inserted between cup and bottom of its bore at any point around cup, cup is not properly seated.*
10. Remove pinion rear bearing cone. *Measure shim (under bearing cone) with a micrometer and record its thickness. If a new gear set is installed on reassembly, a new shim will have to be installed.* The original shim thickness is one of the factors necessary in calculating the new shim thickness.
11. Remove differential components from case.

Drive Pinion Adjustment

Referring to Fig. 1, assemble drive pinion and related parts in housing. In replacing a drive gear and pinion, it should be noted that the original factory installed shim is of the correct thickness to adjust for individual variations in both the carrier casting dimension and in the original gear set dimension. Therefore, to select the correct shim thickness for the new gear set, proceed as follows:

1. Measure thickness of original shim with micrometer.
2. Note shim adjustment number on both the old pinion and the new pinion.
3. Refer to Fig. 2 to determine the correct amount of shim thickness change.
4. If the original shim pack was lost or if a new carrier casting is being installed, substitute a nominal .018" shim for the original and follow the foregoing procedure for a trial build-up. If any further shim change is necessary it will be indicated in the tooth pattern check which is described in the *Rear Axle Chapter.*

Pinion Bearing Preload

1. Insert flange into seal and hold it firmly against front bearing cone. Insert pinion shaft into flange.
2. Place flat washer on pinion shaft, start and tighten flange nut. While there is still end play in pinion shaft, flange and cone will be felt to bottom as nut is tightened.

3. From this point a much greater torque must be applied to turn the nut since the spacer must be collapsed. Also, from this point, the nut must be tightened very slowly and pinion shaft end play checked so that pinion bearing preload does not exceed specified limits. *If preload exceeds limits, a new collapsible spacer must be installed.*
4. As soon as there is preload on the bearings, turn pinion shaft in both directions several times to seat bearing rollers.
5. Adjust preload on used bearings to 10-16 inch lbs. torque and 17-27 inch lbs. on new bearings. Preload is measured with an inch-lb. torque wrench on flange nut as nut is tightened.

Old Pinion Marking	New Pinion Marking								
	−4	−3	−2	−1	0	+1	+2	+3	+4
+4	+0.008	+0.007	+0.006	+0.005	+0.004	+0.003	+0.002	+0.001	0
+3	+0.007	+0.006	+0.005	+0.004	+0.003	+0.002	+0.001	0	−0.001
+2	+0.006	+0.005	+0.004	+0.003	+0.002	+0.001	0	−0.001	−0.002
+1	+0.005	+0.004	+0.003	+0.002	+0.001	0	−0.001	−0.002	−0.003
0	+0.004	+0.003	+0.002	+0.001	0	−0.001	−0.002	−0.003	−0.004
−1	+0.003	+0.002	+0.001	0	−0.001	−0.002	−0.003	−0.004	−0.005
−2	+0.002	+0.001	0	−0.001	−0.002	−0.003	−0.004	−0.005	−0.006
−3	+0.001	0	−0.001	−0.002	−0.003	−0.004	−0.005	−0.006	−0.007
−4	0	−0.001	−0.002	−0.003	−0.004	−0.005	−0.006	−0.007	−0.008

Fig. 2 Drive pinion shim thickness changes

Backlash and Differential Bearing Preload

Check backlash of ring gear and pinion and gear tooth contact as described in the *Rear Axle Chapter*. To establish differential bearing preload, proceed as follows:

1. Tighten differential bearing cap bolts to 40-50 ft. lbs. torque to be sure bearing cups and adjusting nuts are seated. Then loosen cap bolts and re-torque them only to 5 ft. lbs. before making adjustments.
2. Loosen right-hand adjusting nut until it is away from cup. Then tighten left-hand nut until ring gear is forced into pinion with no backlash. Tightening left-hand nut decreases ring gear and pinion backlash and tightening right-hand nut increases backlash.
3. Loosen left-hand nut 1 to 1½ notches. Then tighten right-hand nut two notches beyond the position where it first contacts bearing cup. Rotate ring gear several revolutions in each direction while bearings are loaded to seat the bearings in their cups.
4. Again loosen right-hand nut to release preload. If there is any backlash between gears tighten left-hand nut just enough to remove this backlash.
5. At this time, make sure that one of the slots in the left-hand nut is so located that the lock can be installed without tightening the nut. Carefully tighten the right-hand nut until it just contacts the bearing cup. Then set the preload by tightening the right-hand nut 2 to 3 notches tight.

Axle Shaft, Replace

1. Remove wheel and tire.
2. Back off rear brake shoe adjustments and remove brake drum.
3. Working through hole provided in axle shaft flange, remove nuts that secure wheel bearing retainer. Then pull axle shaft out of axle housing with a slide hammer type puller. *The brake carrier plate must not be dislodged; install one nut to hold plate in place after axle shaft is removed.*
4. If the rear bearing is to be replaced, loosen the inner retainer, Fig. 1. The retainer will become loose on the shaft if it is nicked deeply in several places with a chisel.
5. Remove bearing from shaft, using a press or puller. The new bearing should be pressed on the shaft so that it seats firmly against the shoulder on the shaft. Then press the retainer on the shaft until the retainer seats firmly against the bearing.
6. If the axle shaft oil seal is to be replaced, remove the seal with a slide hammer tool and install the new seal with a suitable driver.
7. Reverse the above procedure to install the axle shaft.

BRAKES, ADJUST

The brakes should be adjusted when the drums are set at normal room temperature. If shoes are adjusted when drums are hot, dragging brakes may result when drums cool.

1. Referring to Fig. 3, raise truck until wheels clear floor. *If truck is on a frame contact hoist, disconnect parking brake cables to prevent their tightening when rear axles and springs sag.*
2. Remove adjusting hole cover from bottom of brake carrier plate and turn adjusting screw until a slight drag on wheel is noted.
3. Back off adjustment 10 notches to allow wheel to rotate freely.
4. Repeat on other wheels.

MASTER CYLINDER, REPLACE

1. Raise front end of truck and position safety stands.

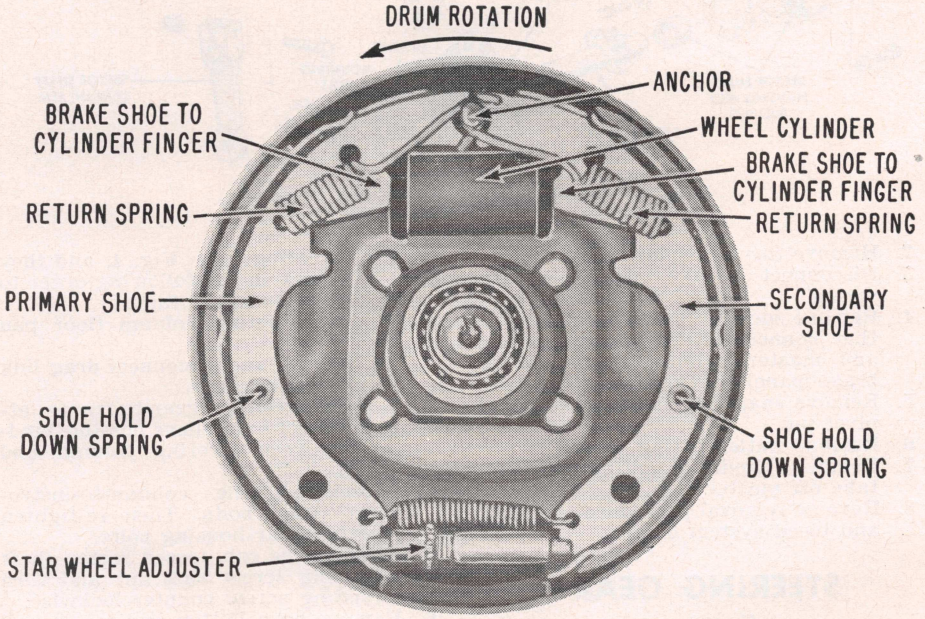

Fig. 3 Brake assembly (front)

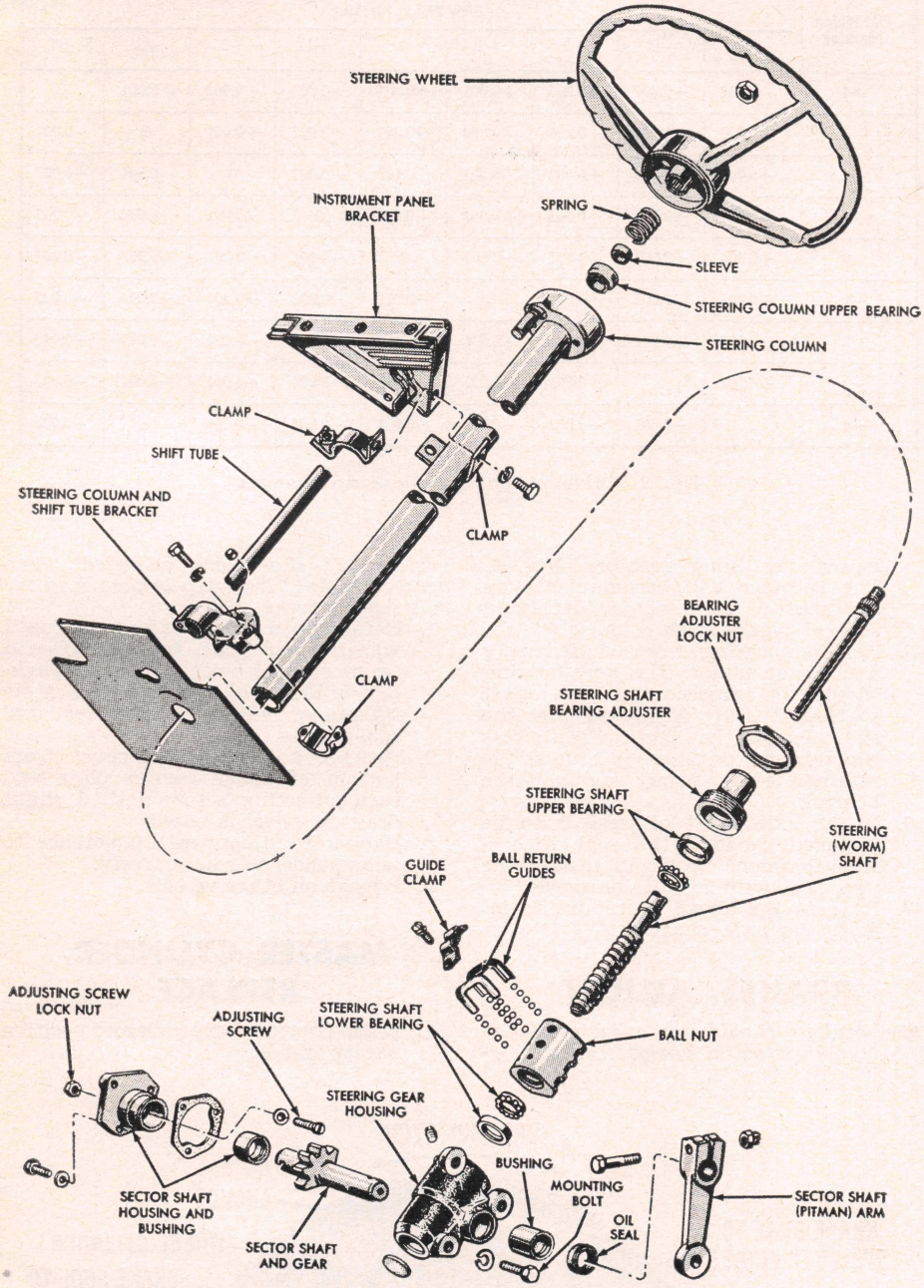

Fig. 4 Steering gear and column assembly

2. Remove forward splash shield.
3. Disconnect brake pedal return spring.
4. Remove locknut and eccentric bolt that connect return spring bracket and master cylinder push rod to brake panel bracket.
5. Remove snap ring from brake pedal pivot pin.
6. Remove outlet fitting bolt.
7. Remove cylinder mounting bolts and take off master cylinder.
8. Reverse removal procedure to install and bleed system of air.

STEERING GEAR

Adjustments

There are only two adjustments within this type steering gear, Fig. 4, and they should be made in the following order to avoid damage and gear failure.

1. Remove steering column floor pan cover.
2. Raise truck and disconnect drag link from steering gear.
3. Loosen steering gear-to-frame attaching bolts to relieve possible binding between steering column and worm shaft.
4. Loosen steering column-to-instrument panel bolts. Then re-tighten steering gear housing bolts.
5. From inside cab, loosen sector shaft adjusting screw lock nut and turn adjusting screw counterclockwise.
6. Remove horn button and spring and disconnect horn wire.
7. Measure worm bearing preload by attaching an inch-pound torque wrench to steering wheel nut. Read pull required to keep wheel moving for at least one complete turn. If torque is not within 3 to 6 inch-pounds, adjust as follows:
8. Loosen steering shaft bearing adjuster lock nut and tighten or back off bearing adjuster to bring preload within 3 to 6 inch-pounds. Tighten steering shaft bearing adjuster lock nut and recheck preload.
9. Turn steering wheel slowly and gently to either stop to avoid damage to ball return guides. Then rotate wheel approximately 2¼ turns to center ball nut.
10. Turn sector adjusting screw clockwise until it requires 8 to 13 inch-pounds to rotate worm past its center. *No perceptible backlash is permissible at 30° either side of center.*
11. Tighten sector adjusting screw lock nut and recheck backlash.
12. Tighten column bracket bolts, connect drag link, tighten instrument panel clamp bolts, install horn button and spring and connect horn wire.

Steering Gear, Replace

1. Disconnect horn and turn signal wires under instrument panel and free them from retaining clip.
2. Remove steering column floor pan.
3. Unfasten steering column clamp.
4. Disconnect transmission shift rods from shift tube arms.
5. Remove steering gear mounting bolts.
6. Remove bolt that clamps pitman arm to sector shaft. With a thin chisel spread pitman arm. Partially remove pitman arm from sector shaft, then move steering gear assembly from pitman arm.
7. Lift steering gear and column assembly out through passenger compartment.

Steering Gear Repairs

1. To disassemble, rotate steering shaft approximately 2¼ turns from either stop.
2. Remove sector shaft with cover.
3. Remove cover from shaft by turning screw clockwise. *Keep shim with screw.*
4. Remove adjuster and steering shaft upper bearing.
5. Pull steering shaft and ball nut from housing and remove steering shaft lower bearing. *Disassemble ball nut only if there is indication of binding.*
6. Remove bearing cups, seals or bushings only if damage is indicated.
7. With bearing adjuster in vise, remove upper and lower bearing cups.
8. Reverse disassembly procedure to reassemble, noting the following:
9. When assembling ball nut, count 31 balls and drop as many of them as possible into one of the guide holes, slowly turning worm away from hole until that circuit is full or until rotation is stopped by end of worm. If balls are stopped by end of worm, hold in those already positioned and

turn worm in opposite direction. Filling of circuit can then be continued until most of the balls are in place.

10. Lay one half of ball return guide on the bench and place the remainder of the 31 balls in it. Position second half of guide and, holding the two halves together, plug each open end with multi-purpose lubricant so balls will stay in guide when it is installed.
11. Push guide into guide holes of ball nut, tapping lightly with wooden handle of screwdriver if necessary.
12. Assemble second ball return circuit in same manner. Install guide clamp and check ball nut to see that it rotates freely.
13. Coat threads of steering shaft bearing adjuster, housing cover bolts and sector adjusting screw with oil-resisting sealing compound. *Do not apply sealer to female threads and especially avoid getting any sealer on steering shaft bearings.*
14. After installing steering wheel nut, adjust worm bearing preload as outlined above.
15. Position sector adjusting screw and shim and check end clearance which should not exceed .002" between screw head and end of sector shaft. If clearance is greater than .002", replace shim.
16. After loosely installing sector shaft adjusting screw lock nut, adjust sector shaft mesh (backlash) as outlined above.

GM DIESEL ENGINES

INDEX OF SERVICE OPERATIONS

PAGE NO.

BLOWER & TURBOCHARGER

Description 657
Inspection 657
Replace Blower 658
Time Blower Rotors 662
Turbocharger 663

ENGINE MECHANICAL

Blower Drive Gear 675
Cam Followers 671
Camshaft 673
Crankshaft End Play 680
Crankshaft Oil Seals 680
Cylinder Head 669
Cylinder Liners 678
Description 640
Injector Tubes 673
Main Bearings 680
Oil Pressure Regulator 680
Oil Pump 680
Piston Pin Bushings 679
Piston Pins 679
Piston Rings 679
Piston & Rod, Install 678
Piston & Rod, Remove 678
Pistons 679
Rocker Arms 671
Rods & Bearings 679
Specifications 638
Timing Gears 673
Trouble Shooting 656
Tune Up 639
Turbocharger 663
Valve & Injector Mechanism 671
Valve Guides 672
Valves & Seats 672
Water Pump 680

PAGE NO.

FUEL INJECTORS

Description of Injectors 664
Assemble 666
Cleaning 666
Disassemble 665
Install 667
Mounting 664
Removal 665
Service 664
Tests 665

FUEL MANIFOLDS 668

FUEL MODULATING GOVERNOR

Adjustments 654
Description 654
Fuel Modulating Spring Tension 654
Fuel Modulating Fuel Gap Closing 655
Fuel Modulating Cam Setting 655
Idle Speed and Buffer Screw Setting 656
Injector Rack Setting 656
Low Speed Spring Gas Setting 654
No Load High Speed Setting 656

FUEL PUMP

Remove 668
Disassemble 668
Assemble 668
Install 668

PAGE NO.

LIMITING SPEED GOVERNOR

In Line 53 Engine 643
In Line 71 Engine 651
V71 Engine 647
6 V-53 Engine 646

TROUBLE SHOOTING

Air in Fuel System 656
Black Smoke In Exhaust 656
Blue Smoke In Exhaust 656
Checking Compression Pressure 657
Engine Stalls Frequently 656
Engine Detonates 656
Engine Runs Unevenly or Stops Frequently 657
Hard Starting 656
Lack of Lube Oil Pressure 657
Loss of Power 656
One or More Cylinders Cut Out 656
Uneven Running or Excessive Vibration 656

TUNE UP & ADJUSTMENTS

Description 640
Fuel Modulating Governor 654
Injector Timing 642
Limiting Speed Governor 643
Valve Lash, Adjust 640

TURBOCHARGER 663

GENERAL SPECIFICATIONS

Engine Series	Bore and Stroke	Piston Disp. Cu. In.	Comp. Ratio	Horsepower @ R.P.M. ③	Torque @ R.P.M.	Firing Order ①		No Load Governed Speed ②	Idle Speed R.P.M.
						Right Hand Rotation	Left Hand Rotation		
3-53	3.875 x 4.50	159	17	81 @ 2500	200 @ 1500	1-3-2	1-2-3	④	450
4-53	3.875 x 4.50	212	17	122 @ 2500	271 @ 1500	1-3-4-2	1-2-4-3	④	450
6V-53	3.875 x 4.50	319	17	171 @ 2500	423 @ 1500	See Below	See Below	④	450
3-71	4.250 x 5.00	213	17	102 @ 2100	277 @ 1400	1-3-2	1-2-3	2100	385-400
4-71	4.250 x 5.00	284	17	143 @ 2100	375 @ 1600	1-3-4-2	1-2-4-3	2150	385-400
4-71E	4.250 x 5.00	284	17	140 @ 2100	375 @ 1600	1-3-4-2	1-2-4-3	2150	385-400
4-71SE	4.250 x 5.00	284	17	140 @ 2100	375 @ 1600	1-3-4-2	1-2-4-3	2150	385-400
4-71T	4.250 x 5.00	284	17	171 @ 2300	411 @ 1600	1-3-4-2	1-2-4-3	2450	385-400
6-71	4.250 x 5.00	426	17	219 @ 2100	574 @ 1600	1-5-3-6-2-4	1-4-2-6-3-5	2150	385-400
6-71E	4.250 x 5.00	426	17	210 @ 2100	574 @ 1600	1-5-3-6-2-4	1-4-2-6-3-5	2150	385-400
6-71SE	4.250 x 5.00	426	17	210 @ 2100	574 @ 1600	1-5-3-6-2-4	1-4-2-6-3-5	2150	385-400
6-71T	4.250 x 5.00	426	17	236 @ 2100	630 @ 1600	1-5-3-6-2-4	1-4-2-6-3-5	2150	385-400
6V-71	4.250 x 5.00	426	17	210 @ 2100	565 @ 1200	See Below	See Below	2340	550
8V-71	4.250 x 5.00	567	17	280 @ 2100	750 @ 1200	See Below	See Below	2340	550
12V-71	4.250 x 5.00	851	17	420 @ 2100	1130 @ 1200	See Below	See Below	2340	550

①—Rotation is determined by standing at front and looking toward rear (transmission end). If crankshaft rotates clockwise engine is right-hand or "R" model; if rotation is counterclockwise engine is left-hand or "L" model.

②—Tolerance allowed: plus 0, minus 25 RPM.

③—Intermittent operation rating.

④—See unit name plate.

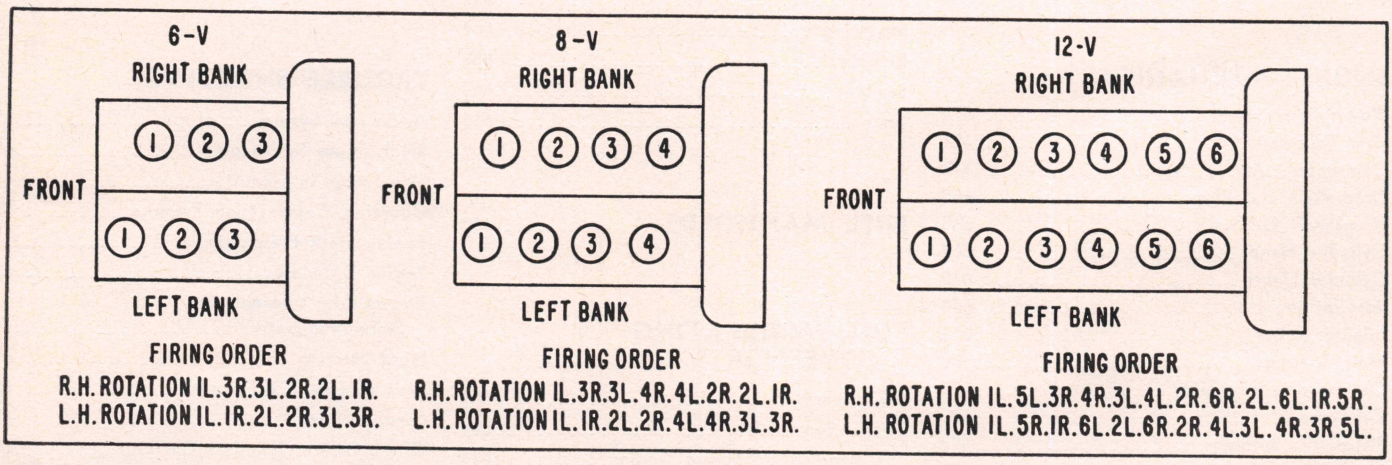

CYLINDER HEAD & VALVE SPECIFICATIONS

Engine Series	Valve Clearance		Valve Face Angle	Valve Stem Diameter	Valve Stem to Guide Clearance	Valve Guide Height Above Head	Rocker Shaft To Bushing Clearance	Push Rod Spring Pressure Lbs. @ In.	Valve & Bridge Spring Pressure Lbs. @ In.
	Cold	Hot							
53, V53①	.011	.009	30	.3095-.3105	.002-.004	.010-.030	.001-.0025	188 @ 2 1/8	45 @ 2 5/16
53, V53②	.026	.024	30	.2475-.2485	.002-.004	.010-.030	.001-.0025	188 @ 2 1/8	29 @ 1 15/16
71, V71①	.012	.009	30	.3415-.3425	.002-.004	1 19/32	.001-.0025	184 @ 2 1/8	140 @ 1 51/64
71, V71②	.016	.014	30	.3095-.3105	.002-.004	7/8	.001-.0025	184 @ 2 1/8	87 @ 1.416

①—Two valve engines. ②—Four valve engines.

PISTON, PIN, RING & LINER SPECIFICATIONS

Engine Series	Inside Diameter of Liner	Liner to Block Clearance	Piston Clearance		Piston Pin Diameter	Piston To Pin Bushing Clearance	Pin To Rod Bushing Clearance	Ring End Gap	
			Top of Skirt	Bottom of Skirt				Comp.	Oil
53, V53	3.8752–3.8767	Slip Fit	.0052–.0083	.0052–.0083	1.3746–1.3750	.0025–.0034	.001–.0019	.020–.046	.010–.025
71, V71	4.2495–4.2511	.0005–.0025①	.004–.0078②	.004–.0078②	1.4996–1.5000	.0025–.0034	.0015–.0024	.018–.043	.008–.023

①—For aluminum block, .001″ tight to .001″ loose. ②—Series V71T and 71T, .006″ to .0098.

ENGINE TIGHTENING SPECIFICATIONS

Engine Series	Cylinder Head, Ft. Lbs.			Con. Rod Bolts Ft. Lbs.	Main Bearing Bolts, Ft. Lbs.	Exhaust Manifold Ft. Lbs.	Rocker Shaft Ft. Lbs.	Valve Bridge Guide, Ft. Lbs.	Crankshaft End Bolt Ft. Lbs.
	Cast Iron Block Nuts	Aluminum Block Nuts	Cast Iron Block Bolts						
V53	170–180	...	...	25–30	120–130	...	50–55	...	...
53	170–180	...	...	40–45	120–130	...	50–55	...	...
V-71	165–175	...	180–190	65–75	180–190	30–35	90–100	46–50③	180–200
71	165–175	140–160	180–190	65–75	180–190①	30–35②	90–100	46–50③	180–200

①—Aluminum block, 120–140. ②—Aluminum block, 25–30. ③—Four valve engines.

CRANKSHAFT & BEARING SPECIFICATIONS

Engine Series	Main Bearing Journal Diameter	Rod Bearing Journal Diameter	Main Bearing Clearance	Rod Bearing Clearance	Shaft End Thrust Taken on Bearing No.	Shaft End Play Controlled By	Thrust Washer Thickness	Shaft End Play
V53	3.499–3.500	2.749–2.750	.0025–.0057	.0017– 0046	Rear	Washers	.1205–.1220	.004–.011
53	2.999–3.000	2.449–2.500	.0013–.0042	.0015–.0045	Rear	Washers	.1205–.1220	.004–.011
71	3.499–3.500	2.749–2.750	.0014–.0044	.0014–.0044	Rear	Washers	.1205–.1220	.004–.011
V-71	4.499–4.500	2.999–3.000	.0012–.0046	.0014–.0044	Rear	Washers	.1205–.1220	.004–.011

Tune Up Section

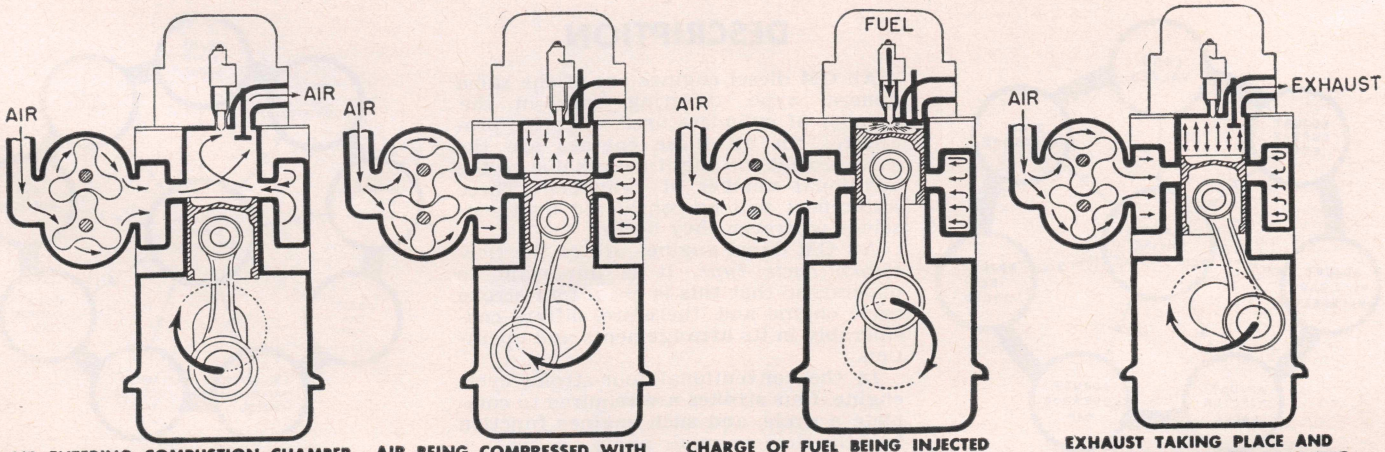

AIR ENTERING COMBUSTION CHAMBER THROUGH CYLINDER LINER PORTS

AIR BEING COMPRESSED WITH THE EXHAUST VALVE CLOSED

CHARGE OF FUEL BEING INJECTED INTO COMBUSTION CHAMBER

EXHAUST TAKING PLACE AND CYLINDER ABOUT TO BE SWEPT WITH CLEAN SCAVENGING AIR

Fig. 1 Operation of GM two-cycle diesel engine

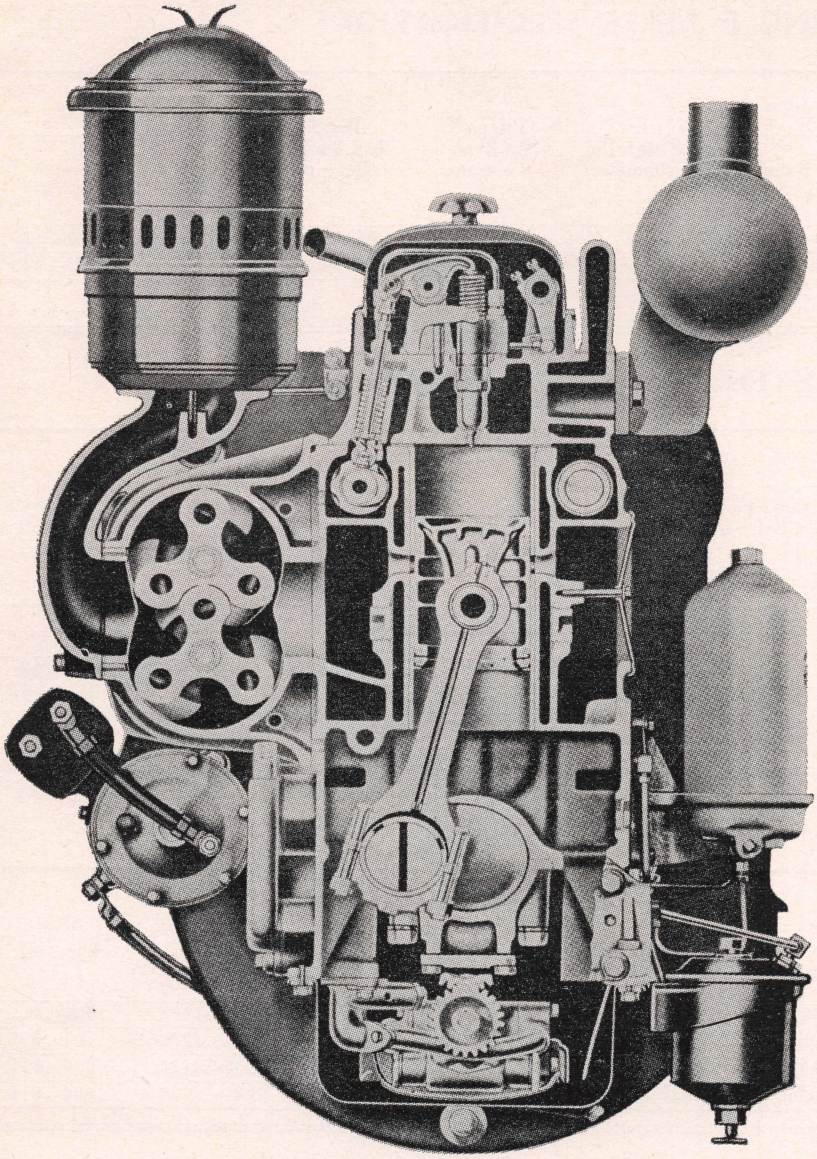

End cross section of a Series 71 In-Line engine

fore, it does not function as an air pump.

This means that an external means of admitting air is provided. A specially designed blower on the side of the engine forces air into the cylinders to expel the exhaust gases and fill the cylinder with fresh air for combustion. Fig. 1 illustrates how this is done.

A systematic approach to tuning these engines should include the following steps, done in the sequence shown in Figs. 2 and 3.

VALVE LASH, ADJUST

The clearance between valve rocker arm and exhaust valve stem on two valve engines, and between valve rocker arm bridge and exhaust valve stem on four valve engines should be as listed in the *Specifications* chart when the engine is at operating temperature.

On two valve engines the clearance is set with a feeler gauge inserted between one valve stem and rocker arm; on four valve engines the feeler gauge is inserted between one valve stem and the bridge with the other end of the bridge resting on the other valve stem.

Maintenance of normal operating temperature is particularly important when adjusting the valve clearance. If the engine is allowed to cool off before setting any of the valves, the clearance when running at full load may become too small.

Insufficient valve clearance will result in loss of compression, misfiring of cylinders, and eventual burning of valves and valve inserts. Excessive clearance will result in noisy operation, especially in the low speed range.

If the rocker arm bracket bolts or cylinder head bolts are disturbed for any reason, the valve clearance should be adjusted to the cold setting (see Specifications) before starting the engine. Then, after the engine has reached operating temperature, recheck the valve clearance with engine running.

Two Valve Engines

1. With engine at normal operating temperature, place fuel shut down lever in the "no fuel" position.

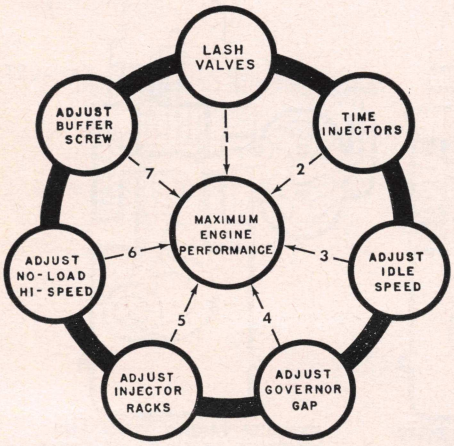

Fig. 2 Tune up chart for engines with two exhaust valves per cylinder

DESCRIPTION

All GM diesel engines are of the same general type, differing only in the number of cylinders used. Service procedures for all these engines are the same except for slight details due to the additional number of cylinders. These differences will be considered by themselves wherever they occur.

All GM diesel engines are of the *two-stroke cycle type*. It is important to understand that this is not a four-stroke cycle engine and, therefore, differs considerably in its arrangements and operation.

In the conventional four-stroke cycle engine, four strokes are required to complete a cycle, and such engines function half the time as an air pump.

In the GM diesel engine, intake and exhaust takes place during part of the compression and power strokes, there-

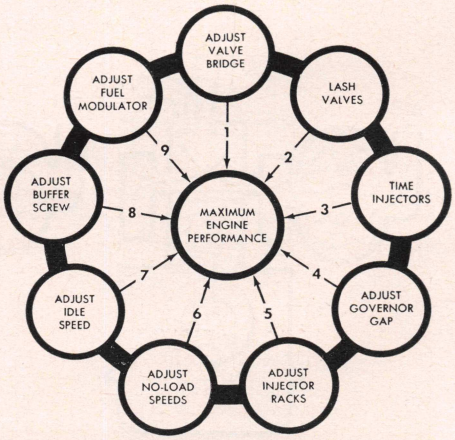

Fig. 3 Tune up chart for engines with four exhaust valves per cylinder. Valve bridge adjustment applies to In Line 71 only

2. Rotate crankshaft until injector follower is fully depressed on the particular cylinder to be adjusted. *When using a wrench on the crankshaft bolt at the front of the engine, do not turn the engine in a left-hand direction as the crankshaft bolt will be loosened.*
3. Loosen push rod lock nut, Fig. 3A, and place the proper thickness feeler gauge between valve stem and rocker arm. Then adjust push rod to obtain a smooth "pull" on the feeler gauge.
4. Remove feeler gauge and while holding push rod, tighten lock nut.
5. Check and adjust remaining valves in the same manner.

Four Valve Engines

The procedure is the same as outlined for two valve engines except that the feeler gauge is inserted between the valve bridge and valve stem, Fig. 4. *Only one feeler gauge placed between one valve stem and the end of the rocker arm bridge is required to adjust the clearance. The other end of the bridge will rest on the other valve stem during adjustment. When the feeler gauge is removed, both valves will have their proper clearance.*

Service Note, 6-71 Four Valve Engines

Valve lash adjustment must always be made at the push rod. Do not disturb bridge adjusting screw. The exhaust valve bridge assembly is adjusted and the adjusting screw locked securely at the time the cylinder head is installed on the engine. Until wear occurs with operation of the engine, no further adjustment is required on the bridge. When wear is evident, a complete bridge adjustment must be made as follows:

1. Remove injector fuel jumper lines, then remove rocker arm shaft brackets. Lift rocker arms and swing

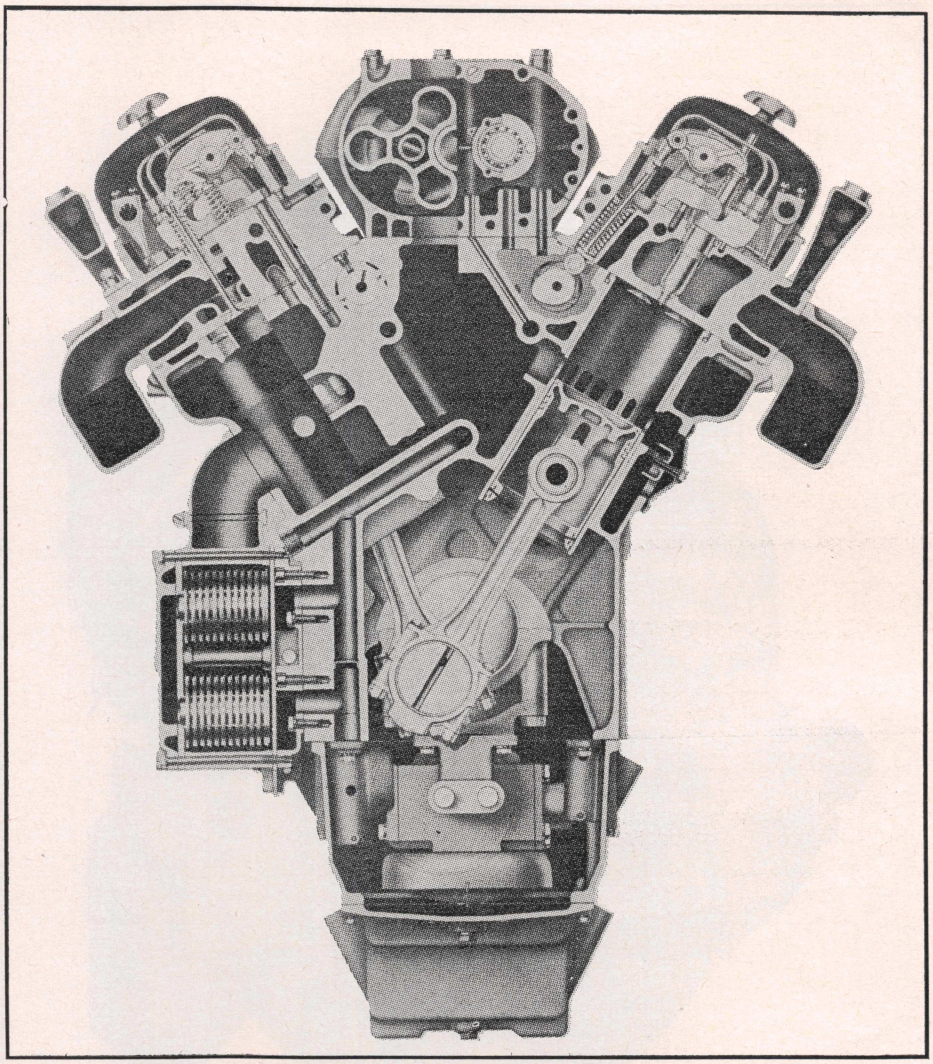

End cross section of a V-71 engine

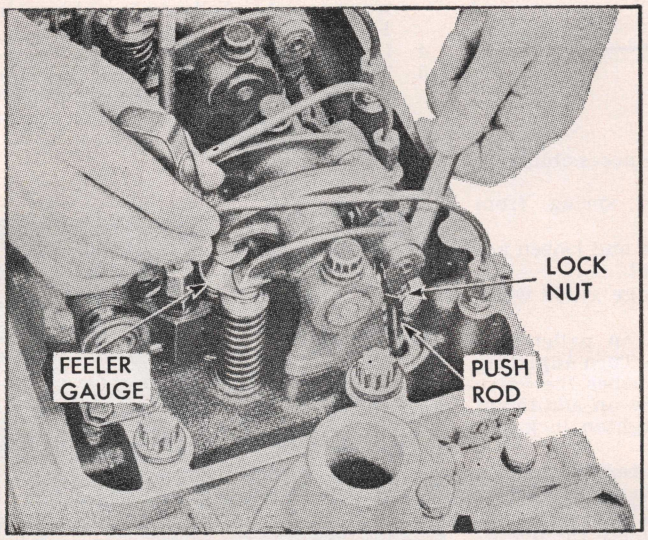

Fig. 3A Adjusting valve lash on engines with two exhaust valves per cylinder

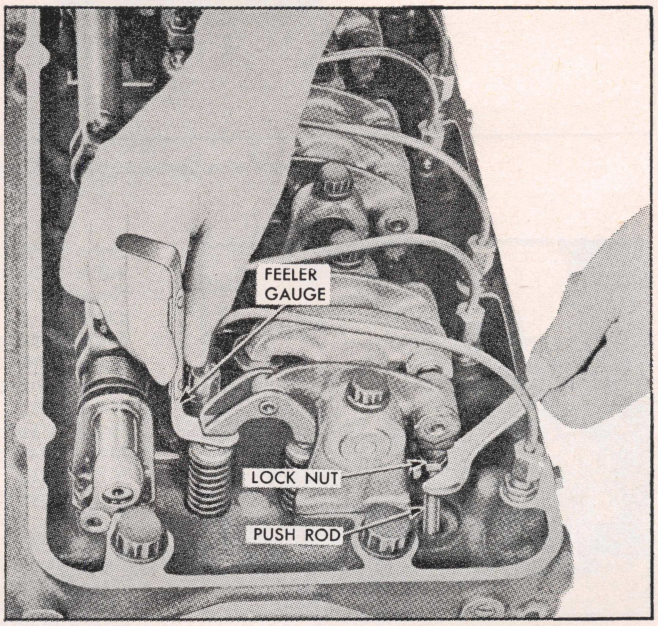

Fig. 4 Adjusting valve lash on engines with four exhaust valves per cylinder

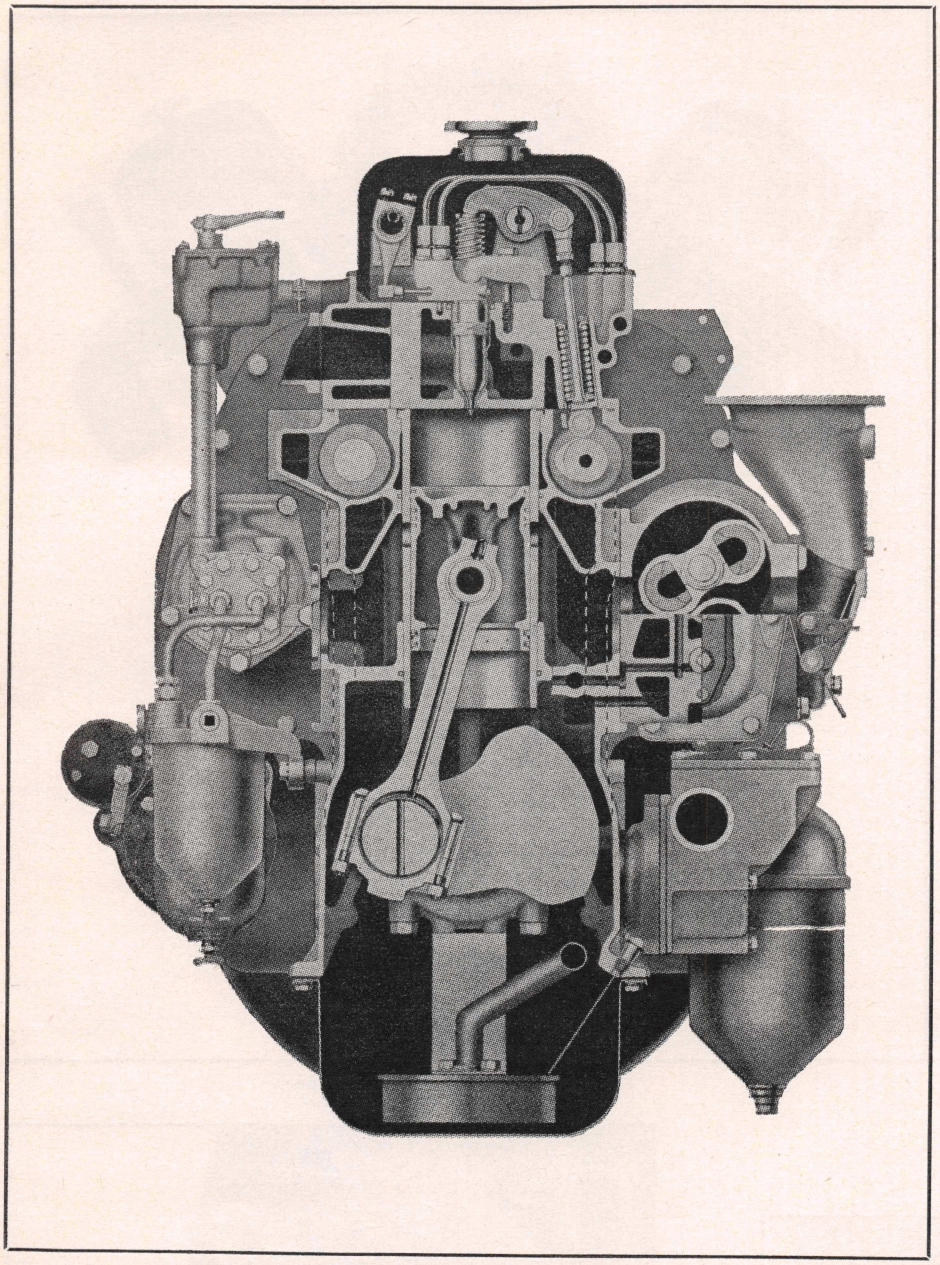

End cross section of a Series 53 In-Line engine

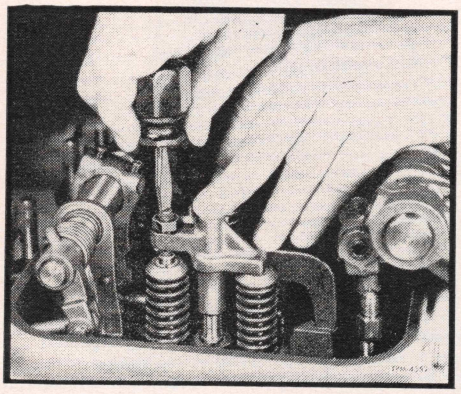

Fig. 5 Adjusting valve bridge on 6-71 4-valve engines

them back to provide accessibility to valve bridge.

2. Remove bridge and spring from guide.
3. Place bridge in a vise and loosen adjusting screw lock nut.
4. Install bridge on bridge guide without spring.
5. Press straight down on pallet surface of bridge, Fig. 5. Turn adjusting screw until it just touches the valve stem, then turn screw an additional ⅛ to ¼ turn and tighten lock nut finger tight.
6. Remove bridge and fasten it in a vise. With screwdriver, hold screw from turning and tighten adjusting screw lock nut. Complete the operation by tightening lock nut to a torque of 25 lbs. ft., being sure that bridge does not turn. *Do not tighten while on engine as binding may damage bridge, guide and valve.*
7. Apply engine oil to bridge and bridge guide.
8. Reinstall bridge in its original position without bridge spring.
9. Place a .015″ feeler under each end of the bridge, Fig. 6. *Feeler used at inner end of bridge must be narrow enough to fit in bridge locating groove.* Pressing down on pallet surface of bridge, both feelers must be tight. If both feelers are not tight, readjust the screw as previously outlined.
10. Remove bridge and reinstall in its original position with bridge spring in place.
11. Adjust remaining bridges in same manner.
12. If cylinder head has been removed, reinstall on engine. Tighten cylinder head stud nuts to their specified torque before assembling rocker shaft brackets to head. This precaution is necessary to prevent valve damage due to mislocated bridges.
13. Install rocker arm assemblies, being sure valve bridges are properly positioned on the inner valve stems.
14. Tighten rocker shaft bracket bolts to a torque of 90-100 lb. ft.
15. Reconnect fuel jumper lines.

INJECTOR TIMING

To time the injectors properly, the injector follower must be adjusted to a definite height in relation to the injector body. All injectors can be timed during one full revolution of the crankshaft.

1. Place governor control lever in the *No Fuel* position.
2. Rotate crankshaft in the direction of engine rotation until the exhaust valves are fully depressed on the particular cylinder being timed. *Left-hand turning engines should not be turned in direction of rotation by use of wrench or crankshaft bolt.*
3. Place small end of injector timing gauge in hole provided in top of injector body with flat of gauge toward injector follower as shown in Fig. 7.
4. Loosen push rod lock nut.
5. Turn push rod and adjust injector rocker arm until the extended part of gauge will just pass over top of injector follower.

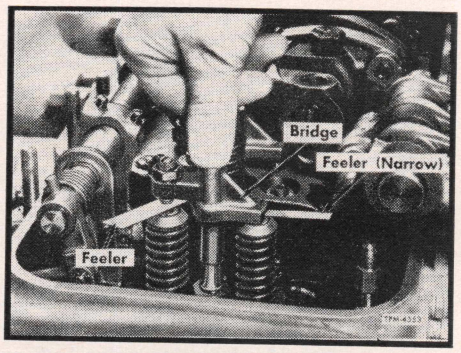

Fig. 6 Valve bridge adjustment check

6. Hold push rod and tighten lock nut. Check adjustment and readjust if necessary.
7. Time remaining injectors in like manner.

Injector Timing Chart

Injector Number	*Timing Dimension*	*Gauge Number*
35①	1.508″	J-8909
35	1.484″	J-1242
40	1.484″	J-1242
45	1.484″	J-1242
60	1.484″	J-1242
60E	1.460″	J-1853
70	1.460″	J-1853
80	1.460″	J-1853
90	1.460″	J-1853
S40	1.460″	J-1853
S45	1.460″	J-1853
S50	1.460″	J-1853
S55	1.460″	J-1853
HE6	1.460″	J-1853
HV6	1.484″	J-1242
HV7	1.460″	J-1853
HV8	1.460″	J-1853
HV9	1.460″	J-1853
HV55	1.484″	J-1242
TV55	1.484″	J-1242
6E8②	1.460″	J-1853
6E8③	1.484″	J-1242
6S8	1.484″	J-1242

①—Reefer Car.

②—Maximum full load speed 2000 RPM and above.

③—Maximum full load speed below 2000 RPM.

53 IN-LINE LIMITING SPEED GOVERNOR

Governor Gap, Adjust

1. With valve lash adjusted, fuel injectors timed, and engine at operating temperature, stop engine and proceed as follows:
2. Remove cover from speed adjusting screws, Fig. 8, and cover on top of governor.
3. Set idle adjusting screw to ⅜″ projection beyond lock nut, and tighten lock nut. *If desired, the idle adjusting screw may be correctly adjusted by starting the engine and setting the idle speed at 450 rpm.*
4. Start and run engine at 800 to 1000 rpm by manual operation of the control tube.
5. With engine operating as in Step 4, set the gap between the low speed spring cap and the high speed spring plunger at .0015″ by adjusting the gap adjusting screw in the operating shaft lever (bellcrank lever).
6. Hold gap adjusting screw and tighten lock nut. Recheck and readjust if necessary.
7. Install governor cover on its housing with the pin of the throttle control lever projecting into the slot of the differential lever and the cover screws tightened in the following manner:
   a. Install four cover screws and lockwashers finger tight.
   b. Pull cover assembly away from engine to take up slack around cover screws. This step is neces-

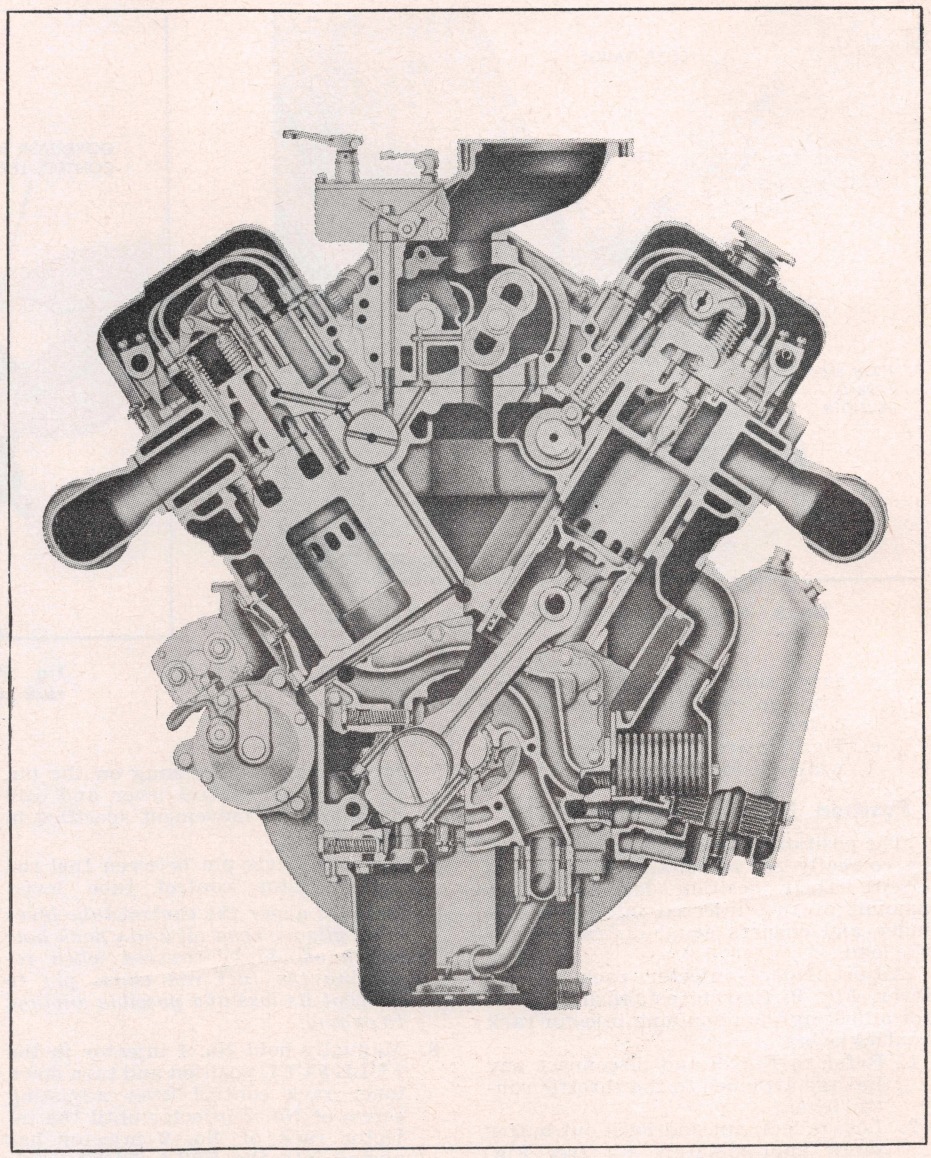

End cross section of a 6V-53 engine

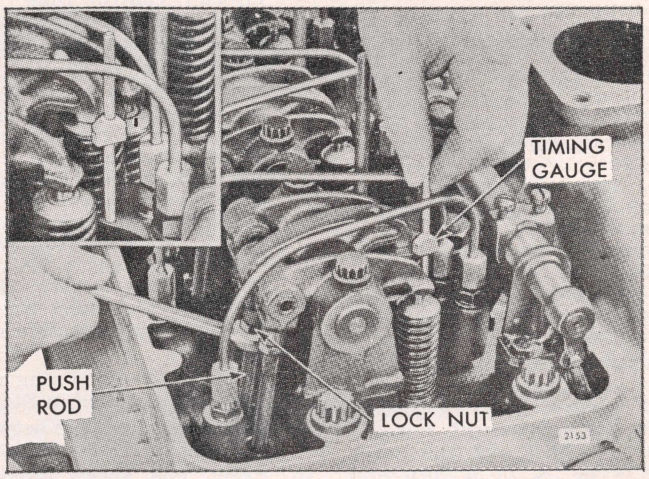

Fig. 7 Timing fuel injector

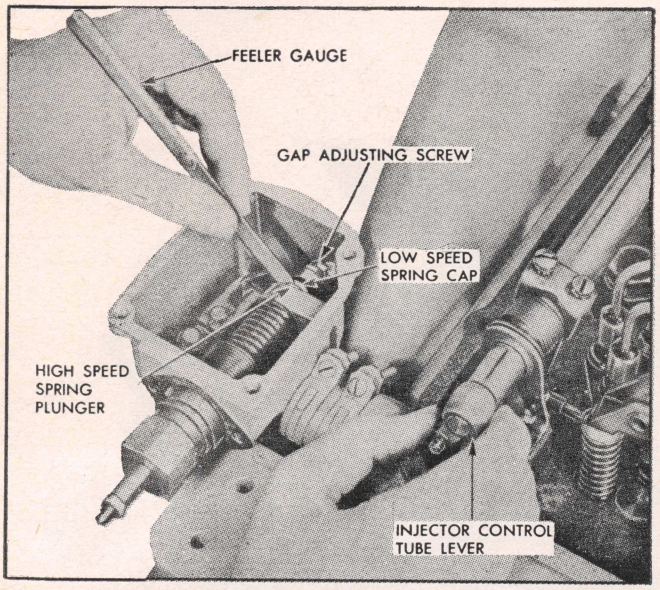

Fig. 8 Adjusting governor gap. In-Line 53 engines

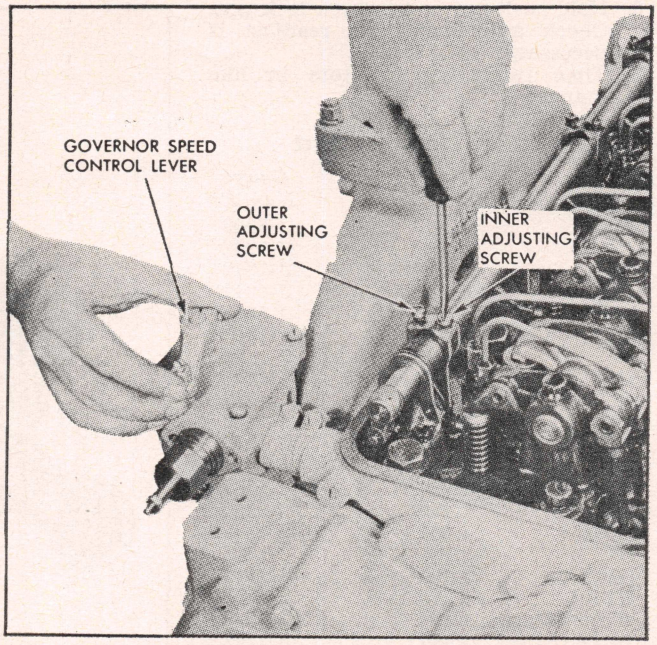

Fig. 9 Positioning No. 1 injector rack control lever. In-Line 53 engines

sary since no dowels project from governor housing to locate cover.

c. Tighten cover attaching screws while performing Step b.

Position Injector Control Racks

The position of the injector racks must be correctly set in relation to the governor. Their position determines the amount of fuel injected into each cylinder and ensures equal distribution of the load.

Adjust No. 1 injector rack control lever, Fig. 9, first to establish a guide for adjusting the remaining injector rack control levers.

1. Refer to Fig. 9 and disconnect any linkage attached to the throttle control lever.
2. Loosen lock nut and back out buffer screw approximately 5/8″ (see Fig. 13).
3. Loosen all inner and outer injector rack adjusting screws. Be sure all injector control levers are free on injector control tube.
4. Move throttle control lever to the FULL FUEL position as shown in Fig. 9. Turn inner adjusting screw down until a step up in effort is noted. This will place No. 1 injector rack in FULL FUEL position. Turn down outer adjusting screw until it bottoms lightly on the injector control tube. Then alternately tighten both the inner and outer adjusting screws until tight.
5. With governor control lever held in the FULL FUEL position, check for a slight movement of the injector control tube lever. This movement should not exceed .005″.
6. If no movement is observed, back off inner adjusting screw 1/8 of a turn and tighten outer adjusting screw. If the movement exceeds that specified, back off the outer adjusting screw 1/8 of a turn and tighten inner adjusting screw.
7. When the setting is correct, the injector rack will be snug on the pin of the rack control lever and still maintain the movement specified in Step 5.
8. Remove clevis pin between fuel rod and injector control tube lever. *Located under the control tube lever is a cylinder head oil drain back hole which should be covered when removing the fuel rod clevis pin to prevent its loss and possible damage to engine.*
9. Manually hold No. 1 injector in the FULL FUEL position and turn down inner rack control lever adjusting screw of No. 2 injector until the injector rack of No. 2 injector has moved into the FULL FUEL position and the inner adjusting screw is bottomed on the injector control tube. Turn outer adjusting screw down until it bottoms lightly on the injector control tube. Then alternately tighten both the inner and outer rack control lever adjusting screws until tight.
10. Recheck No. 1 injector fuel rack to be sure that it has remained snug on the pin of the rack control lever while adjusting No. 2 injector. If the rack of No. 1 injector has become loose, back off slightly on the inner adjusting screw on No. 2 injector rack control lever. Tighten outer adjusting screw. When the settings are correct, the racks of both injectors must be snug on the pin of their respective rack control levers.
11. Position the remaining rack control levers as outlined in Steps 9 and 10.
12. Insert the clevis pin between the fuel rod and injector control tube lever.
13. Reset idle speed adjusting screw until it projects 3/8″ beyond the lock nut. Tighten lock nut.

Maximum No-Load Engine Speed

All governors are properly adjusted before leaving the factory. However, if the governor has been reconditioned or replaced, and to ensure the engine speed will not exceed the recommended no-load speed given on the unit name plate, the maximum no-load speed may be set as follows:

Vehicle Units

1. Start engine and when it reaches operating temperature, remove load from engine.
2. Place engine throttle control lever in the Full Speed position and note engine speed.
3. Stop engine and, if necessary, refer to Fig. 10 and adjust engine to desired no-load speed as follows:
4. Remove high speed spring retainer, spring and plunger assembly, Fig. 11. *Be careful not to jar assembly while it is being removed to prevent the low speed spring and cap from dropping into governor.*
5. Remove high speed spring from its plunger and add or remove shims as required to establish the desired engine No-Load speed. Shims are available in .010″ and .078″ thickness. For each .010″ of shims added, engine speed will increase approximately 10 rpm.
6. Replace high speed spring on its plunger and assemble into governor housing. Install spring retainer in governor housing and tighten securely.
7. Start engine and recheck engine No-Load speed and readjust if necessary.

Industrial Units

1. Referring to Figs. 10 and 11, loosen lock nut and back off high speed spring retainer five turns.

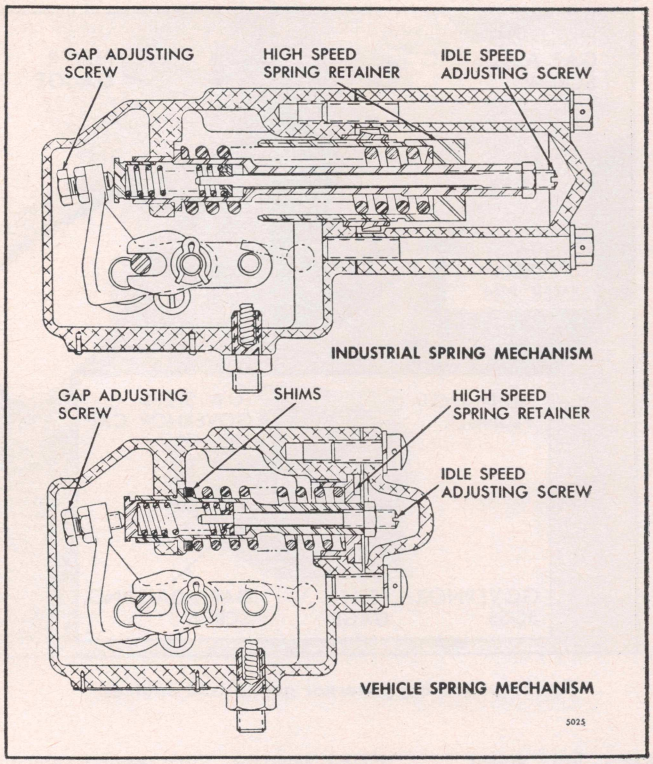

Fig. 10 Differences between industrial and vehicle type governor spring assemblies. In-Line 53 engines

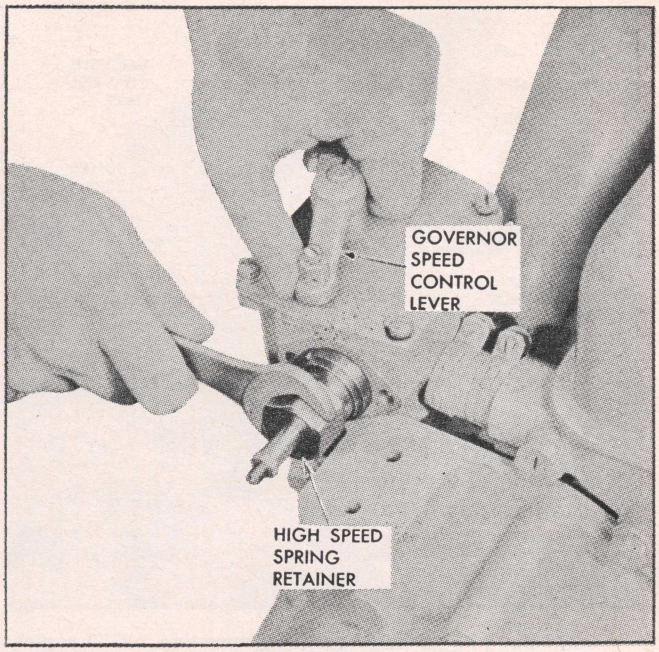

Fig. 11 Adjusting maximum no-load engine speed. In-Line 53 engines

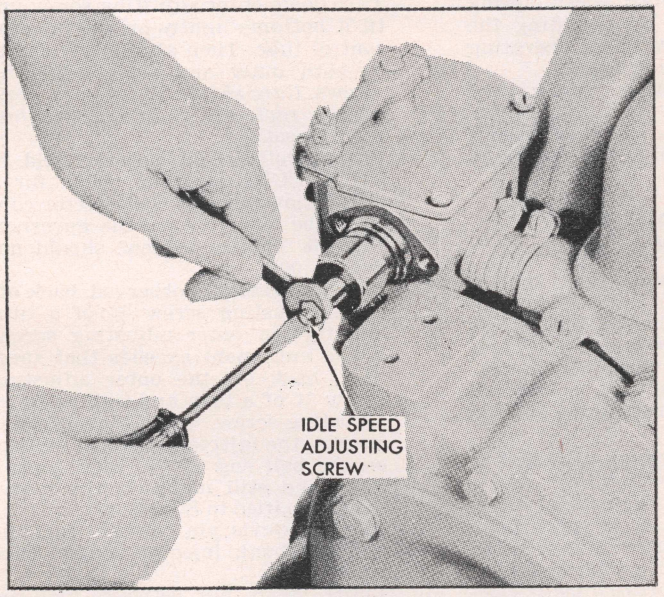

Fig. 12 Adjusting engine idle speed. In-Line 53 engines

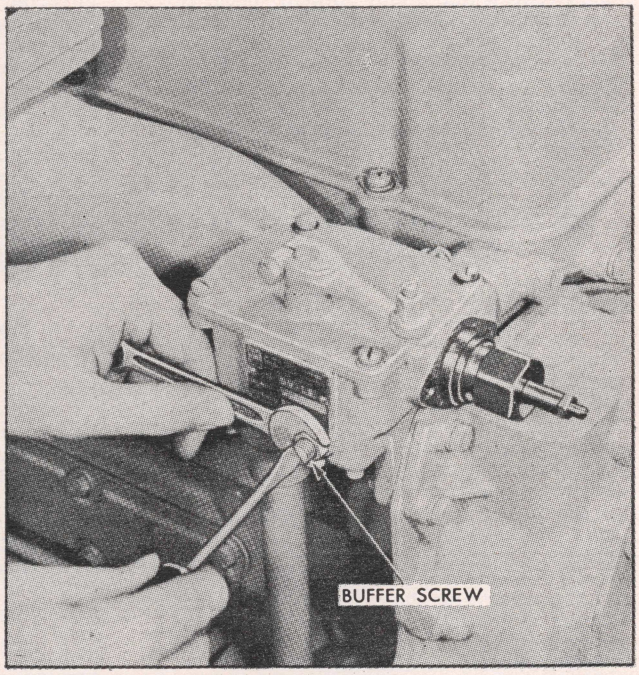

Fig. 13 Adjusting buffer screw. In-Line 53 engines

2. With engine at operating temperature and no load on the engine, place throttle control lever in FULL SPEED position. Turn high speed spring retainer IN until the engine is operating at the recommended no-load speed.
3. Hold retainer and tighten lock nut.

Idle Speed, Adjust

1. With maximum no-load speed properly adjusted, and with engine running at operating temperature and buffer screw backed out to avoid contact with differential lever, turn idle speed adjusting screw, Fig. 12, until engine idles at recommended idle speed. The recommended idle speed is 450 rpm for double weight limiting speed governors but may vary with special engine applications.
2. Hold idle speed adjusting screw and tighten lock nut.
3. Install high speed spring cover and retain with two bolts.

Buffer Screw, Adjust

1. With engine at idle speed, turn buffer screw IN so that it contacts differential lever as lightly as possible and still eliminates engine "roll", Fig. 13. *Do not increase engine idle speed more than 15 rpm with buffer*

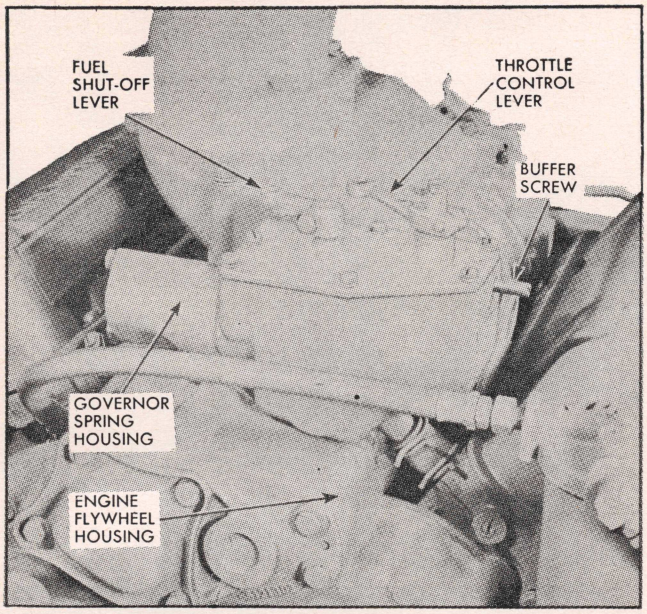

Fig. 14 Limiting speed governor mounting. 6V-53 engines

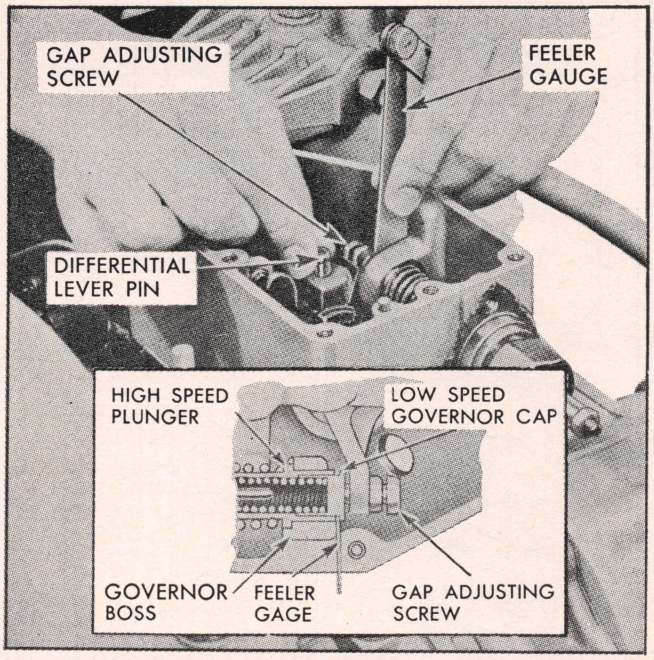

Fig. 15 Checking governor gap. 6V-53 engines

screw.

2. Recheck maximum no-load speed. If it has increased more than 25 rpm from the top speed attained when previously adjusted, back off buffer screw until the increase is less than 25 rpm.
3. Hold buffer screw and tighten lock nut.

6V-53 LIMITING SPEED GOVERNOR

The limiting speed mechanical governor assembly is mounted near the rear of the engine, between the flywheel housing and the blower, Fig. 14. The governor is driven by the right blower rotor drive gear. The left blower rotor is driven by a shaft that passes through the governor housing from the engine gear train. There are two types of limiting speed governor assemblies. One type is generally used in industrial applications and the other is generally used in vehicles. The difference between each type will be pointed out later on.

After adjusting the exhaust valves and timing the fuel injectors as outlined previously, adjust engines with limiting speed governor as follows:

Governor Gap, Adjust

1. With engine at operating temperature, but not running, remove two bolts and withdraw governor high speed spring retainer cover.
2. Back out buffer screw until it extends ¾″ (see Fig. 20).
3. Start engine and loosen idle speed adjusting screw lock nut and adjust idle screw to obtain 450 rpm.
4. Stop engine and remove governor cover and engine rocker covers.
5. Start and run engine at 800 to 1000 rpm by manual operation of the differential lever, Fig. 15, and check governor gap between low speed spring cap and high speed spring plunger. Do not overspeed engine.
6. With engine operating at 800 to 1000 rpm, set gap between low speed spring cap and high speed spring plunger at .0015″ by adjusting the gap adjusting screw in the operating shaft lever (bellcrank lever).
7. Hold gap adjusting screw and tighten lock nut.
8. Recheck gap and adjust if necessary.
9. Stop engine and reinstall governor cover.

Position Injector Rack Control Levers

Adjust No. 3L injector rack control lever first to establish a guide for adjusting the remaining levers. The letters R or L indicate injector location in right or left cylinder bank, viewed from rear of engine. Cylinders are numbered starting at the front of the engine on each cylinder bank.

1. Disconnect any linkage attached to governor throttle control lever.
2. Adjust idle speed adjusting screw until ½″ of threads project from lock nut. *This adjustment lowers the tension of the low speed spring so that it can be compressed while closing the low speed gap without bending the fuel rods.*
3. Back out buffer adjusting screw ¾″, if not previously performed.
4. Remove valve rocker covers, if not previously done, and remove clevis pin between fuel rod and right cylinder bank injector rack control lever.
5. Loosen all inner and outer injector rack control lever adjusting screws on both cylinder banks. *Be sure all rack control levers are free on injector control tubes.*
6. Move throttle control lever, with light finger pressure, to FULL FUEL position. Turn inner adjusting screw of No. 3L injector rack control down, Fig. 16, until a step up in effort is noted. This will place No. 3L injector in FULL FUEL position. Turn down outer adjusting screw until it bottoms lightly on the injector control tube. Then alternately tighten both inner and outer adjusting screws. *Care should be taken to avoid setting rack too tight causing fuel rod to bend.*
7. With throttle control lever held in FULL FUEL position, check for a slight movement of the injector control tube lever toward the governor, Fig. 16. This movement should not exceed .005″.
8. If no movement is observed, back off inner adjusting screw ⅛ of a turn and tighten outer adjusting screw. If the movement exceeds that specified, back off the outer adjusting screw ⅛ of a turn and tighten inner adjusting screw. When the setting is correct, the injector rack will be snug on the ball end of the rack control lever and still maintain the movement specified in Step 7.
9. Remove clevis pin between fuel rod and left bank injector control tube lever.
10. Insert clevis pin between fuel rod and right cylinder bank injector control tube lever and position No. 3R injector rack control lever as previously outlined in Steps 6 through 9 for the No. 3L injector rack control lever.
11. Manually hold No. 3L injector rack in FULL FUEL position and turn down inner adjusting screw of the No. 2L injector rack control lever until the injector rack for No. 2L injector has moved to FULL FUEL position. Turn outer adjusting screw down until it bottoms lightly on injector control tube. Then alternately

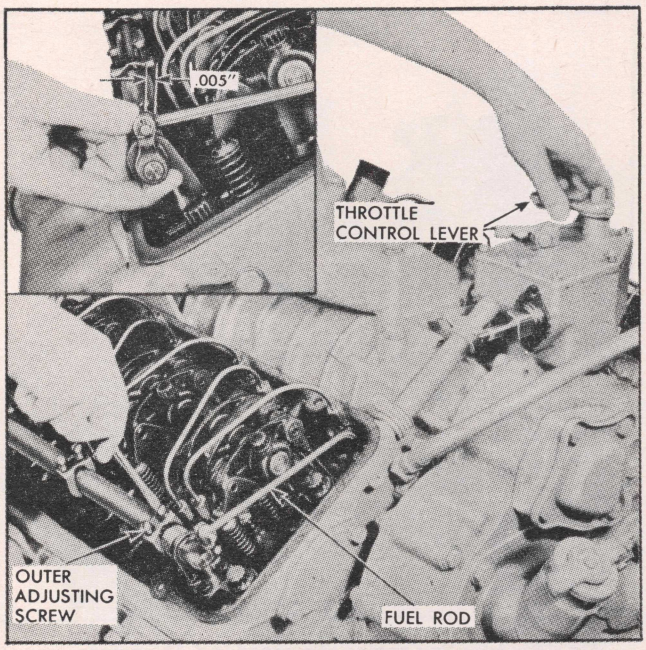

Fig. 16 Adjusting No. 3L injector rack control lever. 6V-53 engines

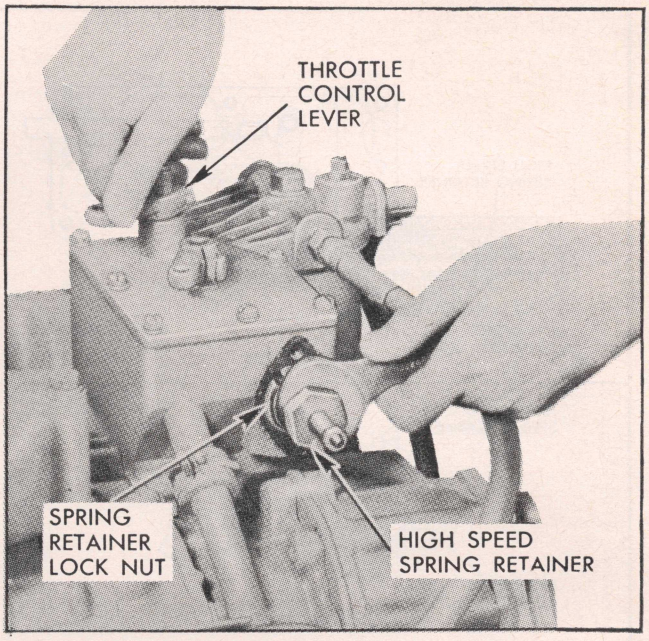

Fig. 17 Adjusting maximum no-load speed. 6V-53 engines

tighten both inner and outer adjusting screws.

12. Recheck No. 3L injector rack to be sure that it has remained snug on the ball end of the rack control lever while positioning No. 2L injector rack. If the rack of No. 3L injector has become loose, back off slightly the inner adjusting screw on No. 2L injector rack control lever. Tighten outer adjusting screw. When the settings are correct, the racks of both injectors must be snug on the ball end of their respective rack control levers.
13. Position No. 1L injector rack control lever as outlined in Steps 11 and 12.
14. Position No. 2R and 1R injector racks as outlined above for the left cylinder bank in Steps 11 through 13.
15. Insert clevis pins between the fuel rods and injector control tube levers on both cylinder banks.
16. With the governor throttle control lever held in the FULL FUEL position, check for a slight movement of both right and left bank injector control tube levers. This movement should not exceed .005". Repeat above procedure if necessary.
17. Turn idle speed adjusting screw in until it projects 3/16" from the lock nut to permit starting of the engine.
18. Replace engine rocker covers.

Maximum No-Load Speed, Idle Speed & Buffer Screw Adjustments

These adjustments are made as outlined for the In-Line 53 engines. Refer to Figs. 17 to 20, and follow the procedure given for the In-Line engines.

V-71 LIMITING SPEED GOVERNOR

The two types of limiting speed mechanical governors used on V-71 engines are covered in this procedure. The difference between each type of governor is in the high speed spring retainer and spring housing assembly. Industrial engines usually use the governor without the dual range feature whereas on some vehicle applications it may be advantageous to use the dual range governor.

The only variation in the tune-up procedure between each type of governor is in the setting of the maximum no-load engine speed. Therefore, the setting of the maximum no-load engine speed is given for each type of governor under separate headings.

Adjust Governor Gap

1. With engine at operating temperature, and shut off, remove two bolts and withdraw governor high speed spring retainer cover.
2. Start engine and loosen idle speed adjusting screw lock nut and adjust idle speed screw to obtain 400 rpm.
3. Stop engine and remove governor cover and lever assembly.
4. Start and run engine at a speed between 800 and 1000 rpm by manual operation of the differential lever, Fig. 21. *Do not overspeed engine.*
5. With engine operating at 800-1000 rpm, set gap between low speed spring cap and the high speed spring plunger at .0015" by adjusting the gap adjusting screw in the operating shaft lever (bellcrank lever).
6. Hold gap adjusting screw and tighten lock nut.
7. Recheck gap and adjust if necessary.
8. Stop engine and reinstall governor cover and lever.

Position Injector Control Racks

The position of the injector control racks must be correctly set in relation to the governor. Their position determines the amount of fuel injected into each cylinder and ensures equal distribution of the load.

Adjust No. 1L rack control lever first to establish a guide for adjusting the remaining injector rack control levers. The letters R and L indicate injector location in right and left cylinder bank, viewed from rear of engine.

1. Disconnect any linkage attached to the governor throttle control lever.
2. Adjust idle speed adjusting screw until ½" of threads project from the lock nut.
3. Loosen buffer screw lock nut and back out screw approximately ⅝".
4. Remove valve rocker covers and clevis pin between fuel rod and right cylinder bank injector control lever.
5. Loosen all inner and outer injector rack control lever adjusting screws on both cylinder heads. Be sure all rack control levers are free on the injector control tubes.
6. Move governor cover throttle control lever to the "full fuel" position, holding in this position with light finger pressure. Turn the inner adjusting screw of No. 1L injector rack control lever down, Fig. 22, until a slight movement of the governor cover throttle control lever is observed, or a step-up in effort is noted. This will place No. 1L injector rack in "full fuel" position. Turn down outer adjusting screw until it bottoms lightly on the injector control tube. Then alternately tighten both inner and outer adjusting screws. *Care should be used to avoid setting rack too tight causing fuel rod to bend.*

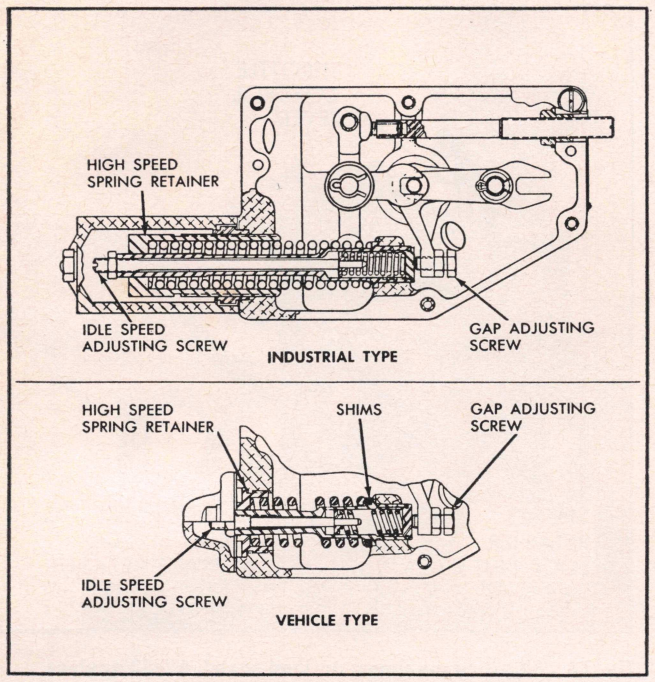

Fig. 18 Differences between industrial and vehicle type limiting speed governors. 6V-53 engines

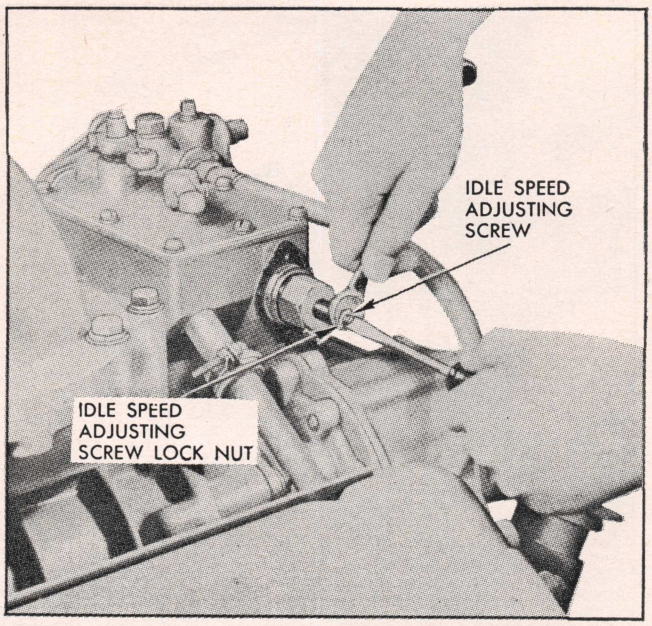

Fig. 19 Adjusting engine idle speed. 6V-53 engines

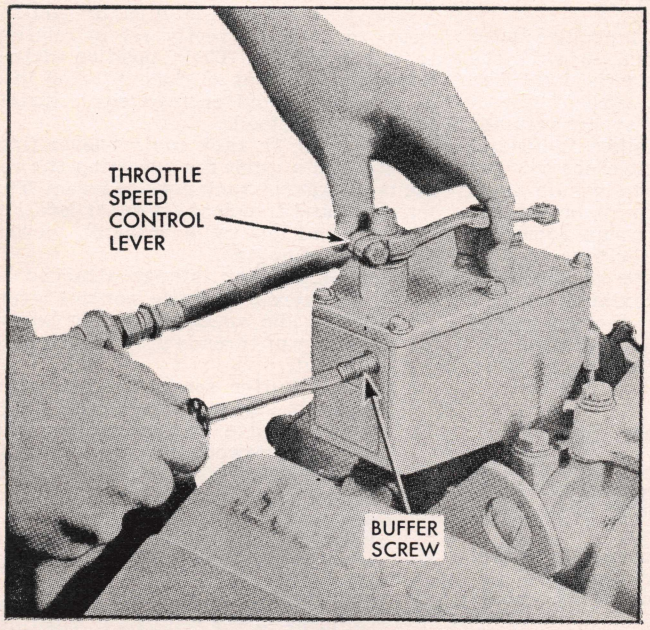

Fig. 20 Adjusting buffer screw. 6V-53 engines

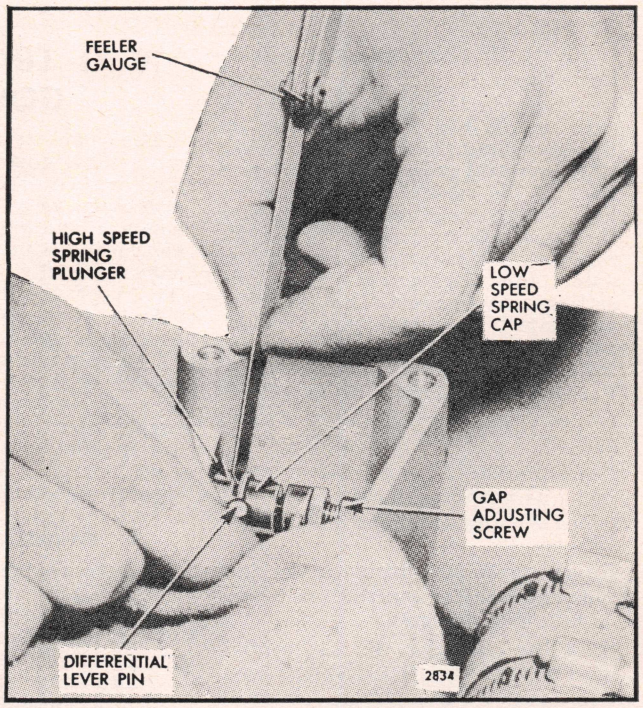

Fig. 21 Adjusting governor gap. V-71 with limiting speed governor

7. With governor cover throttle control lever held in "full fuel" position, check for a slight movement of the injector control tube lever toward the governor. This movement should not exceed .005″.
8. If no movement is observed, back off inner adjusting screw approximately ⅛ turn and tighten outer adjusting screw. If movement exceeds .005″, back off outer adjusting screw approximately ⅛ turn and tighten inner adjusting screw. When the setting is correct, the injector rack will be snug on the ball end of the rack control lever and still maintain the .005″ movement.
9. Remove clevis pin between fuel rod and left bank injector control tube lever.
10. Manually hold No. 1L injector rack in "full fuel" position and turn down inner adjusting screw of No. 2L injector rack control lever until the injector rack of No. 2L injector has moved into the "full fuel" position. Turn outer adjusting screw down until it bottoms lightly on the injector control tube. Then alternately tighten both the inner and outer screws.
11. Recheck No. 1L injector rack to be sure that it has remained snug on the pin of the rack control lever while positioning No. 2L injector rack. If the rack of No. 1L has

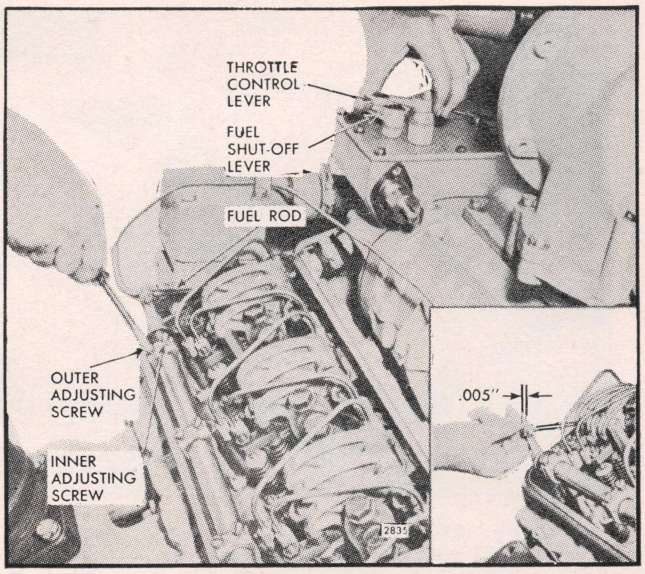

Fig. 22 Positioning No. 1 injector rack lever. V-71 engine

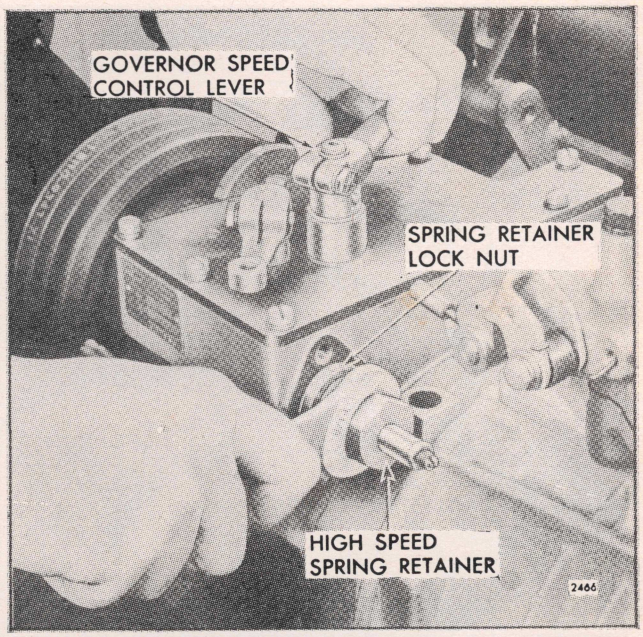

Fig. 25 Adjusting maximum no-load speed. V-71 with limiting speed governor

become loose, back off slightly the inner adjusting screw on No. 2L injector rack control lever. Tighten outer adjusting screw. When the settings are correct, the racks of both injectors must be snug on the ball end of their respective rack control levers.

12. Position remaining injector rack control levers as outlined in Steps 10 and **11.**
13. Insert clevis pin between fuel rod and right cylinder bank injector control tube lever.
14. Position the right cylinder bank injector racks as outlined for the left cylinder bank in Steps 6 through 12.
15. Insert clevis pins between fuel rods and the injector control tube levers, both right and left cylinder banks.
16. With the governor throttle control lever held in "full fuel" position, check for a slight movement of both right and left bank injector control tube levers. This movement should not exceed .005", Fig. 22.

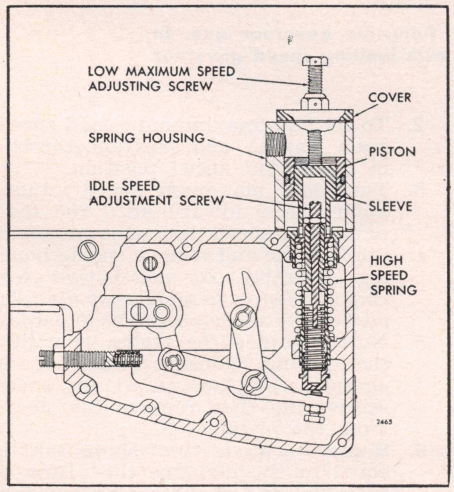

Fig. 23 Early dual range governor (top view). V-71 with limiting speed governor

17. Turn idle speed adjusting screw in until it projects $\frac{3}{16}$" from the lock nut to permit starting of the engine.

Adjust Maximum No-Load Engine Speed on Units Using Early Dual Range Governor

After positioning the injector control racks, with buffer screw backed out, set governor maximum speeds as follows:

With the spring housing assembly mounted on the governor and piston and sleeve assembled as shown in Fig. 23, and the low maximum speed adjusting screw extended from the spring housing approximately ¾" beyond the lock nut, proceed as follows: (To stop air leakage between piston and sleeve assembly coat the mating threads with a suitable sealer.)

1. Start engine and position engine throttle in maximum speed position.
2. Loosen lock nut and turn maximum speed adjusting screw inward until the desired no-load high maximum speed is obtained.
3. Stop engine and remove spring housing assembly. *Do not permit seal ring on piston to slide past air inlet port, since the seal ring will be damaged.*
4. Remove piston and sleeve from governor spring housing.
5. Turn piston on sleeve until piston is flush to $\frac{1}{64}$" below end of governor spring housing when piston and sleeve are placed in governor spring housing and held tight against adjustment screw of cover that is also positioned, with its gasket, against opposite end of spring housing.
6. Replace piston and sleeve in spring housing and assemble to governor.
7. Start engine and position throttle in maximum speed position and apply air pressure to governor. *To overcome tension of governor high speed spring, 50 psi air pressure will be required in governor spring housing.*
8. Back out low maximum speed adjustment screw ¼". If piston is adjusted correctly, engine will operate at recommended high maximum no-load speed set.
9. Remove air pressure from governor.
10. Make minor adjustment on piston and sleeve if necessary to establish exact speed desired.
11. To set low maximum no-load speed, adjust low maximum speed adjusting screw, with engine throttle control lever in the maximum speed position, until the desired low maximum speed is obtained. Turn screw inward to increase or out to decrease engine speed.

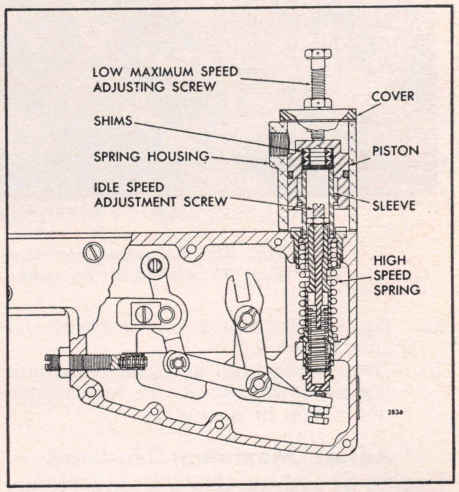

Fig. 24 Late dual range governor (top view). V-71 with limiting speed governor

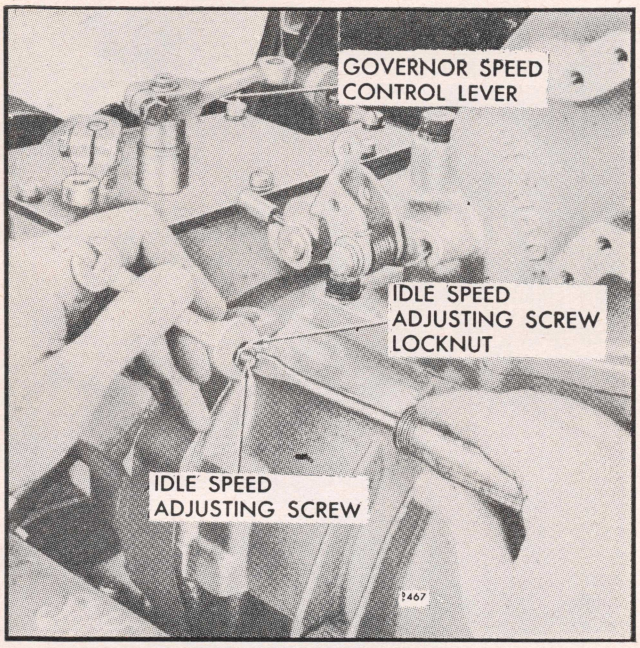

Fig. 26 Adjusting engine idle speed. V-71 with limiting speed governor

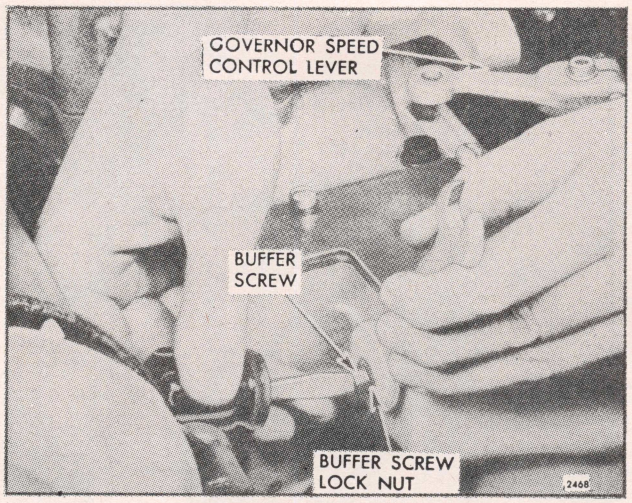

Fig. 27 Adjusting buffer screw. V-71 with limiting speed governor

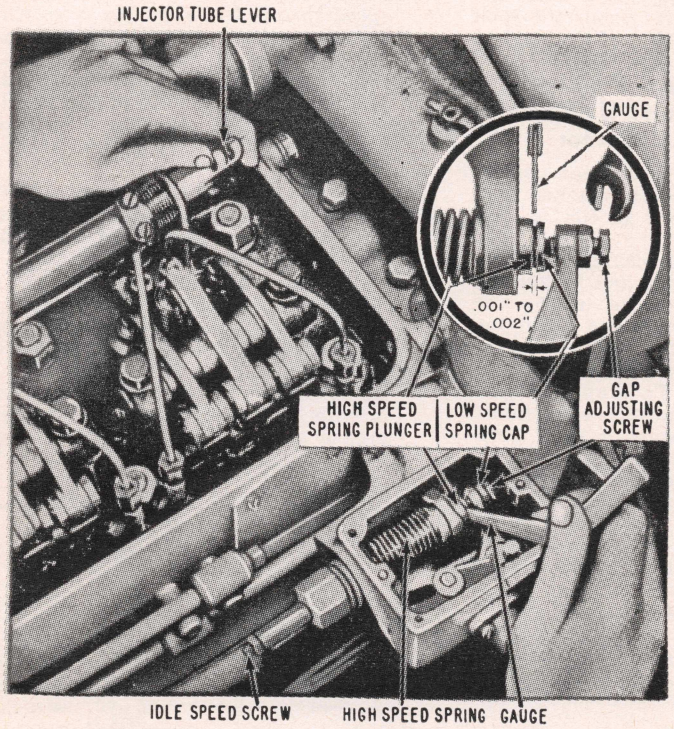

Fig. 28 Adjusting governor gap. In Line 71 with limiting speed governor

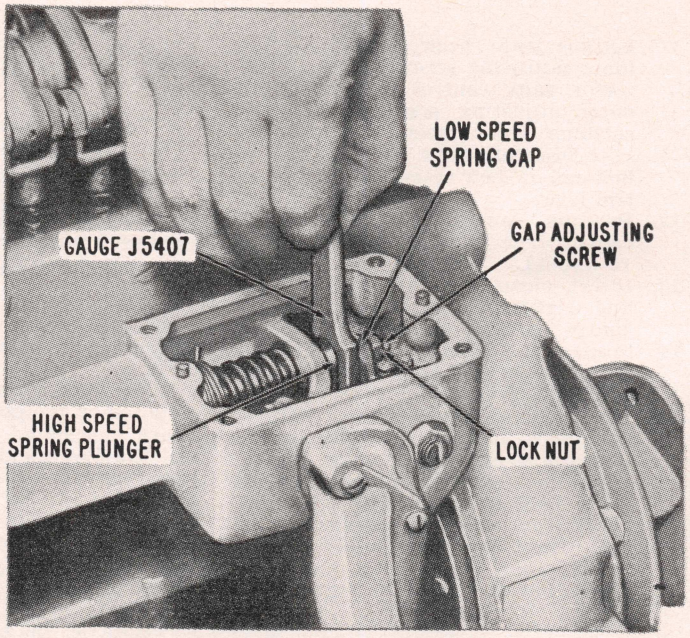

Fig. 29 Adjusting governor gap. In Line 71 with limiting speed governor

12. Tighten lock nut and recheck engine speed.
13. Check both high and low maximum engine speeds, and make any adjustment that is necessary.

Adjust Maximum No-Load Engine Speed on Units Using Newer Dual Range Governor

After positioning injector control racks and with the buffer screw backed out, set the governor maximum engine speeds as follows:

1. With the spring housing mounted on the governor and the piston and sleeve assembled with four .010″ shims and ten .010″ shims as shown in Fig. 24, and the low maximum speed screw extending approximately 1¼″ from spring housing, proceed as follows:
2. To set high maximum no-load speed, start engine and position throttle in maximum speed position.
3. Turn low maximum speed adjustment screw inward until the high maximum speed desired is obtained.
4. Stop engine and remove spring housing assembly. *Do not permit seal ring on piston to slide past air inlet port as the seal ring will be damaged.*
5. Note distance the piston is within the spring housing when it is against the low maximum speed screw, and then remove the sleeve from the piston.
6. Remove a quantity of shims that is equal to the distance the piston is from the end of the spring housing. The piston should be held tight against the adjustment screw of the

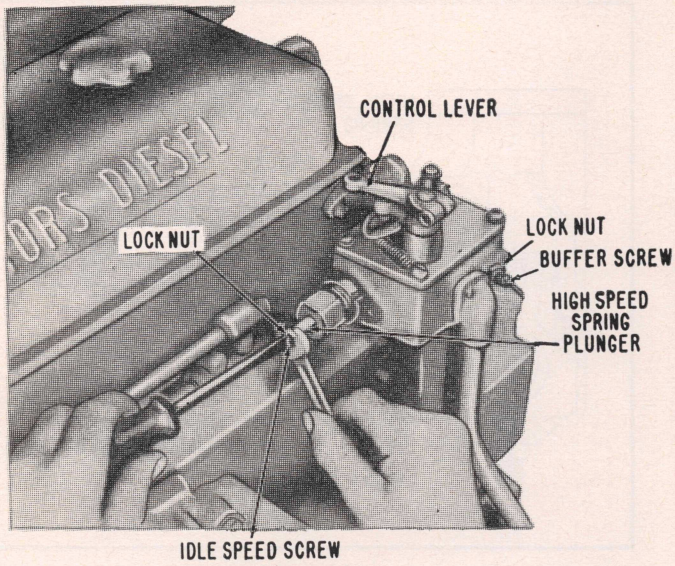

Fig. 30 Adjusting idle speed. In Line 71 with limiting speed governor

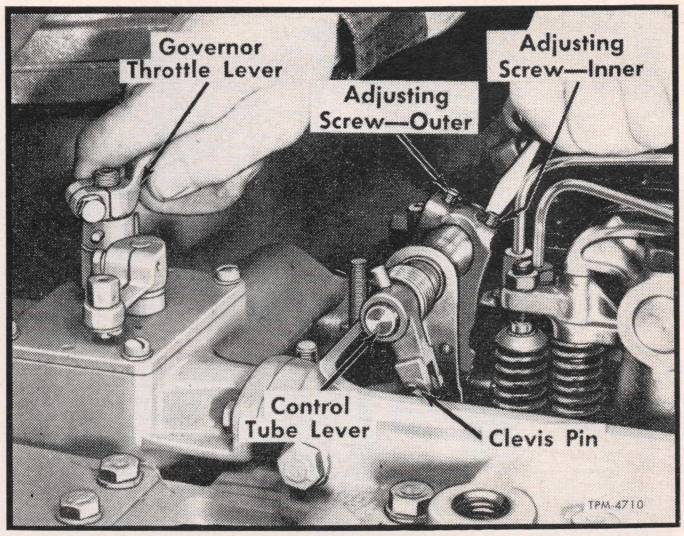

Fig. 31 Positioning injector control rack. In Line 71's

cover that is also held in position, with its gasket, against the opposite end of the spring housing.

7. Replace sleeve and piston and install spring housing onto governor.
8. Start engine and position throttle in the maximum speed position and apply air pressure to governor and note engine speed.
9. Remove air pressure from governor and stop engine. Then install or remove shims as required to obtain the correct high maximum no-load speed. Removing shims will decrease or adding shims will increase engine speeds. Each .010″ of shims removed or added will change engine speed approximately 10 rpm.
10. To set low maximum no-load speed, adjust low maximum speed screw with engine throttle control lever held in the maximum speed position until the desired low maximum speed is obtained. Turn screw in to increase or out to decrease engine speeds.
11. Recheck result and adjust as required.

Adjust Maximum No-Load Speed on Units Not Using Dual Range Governor

If the governor has been reconditioned or replaced, and to ensure the engine speed will not exceed the recommended no-load speed as given on the unit name plate, the maximum no-load speed may be set as follows:

1. Loosen spring retainer lock nut, Fig. 25, and back off high speed spring retainer approximately five turns.
2. With engine at operating temperature and no load on engine, place control lever in "full fuel" position. Turn high speed spring retainer in until engine is operating at recommended no-load speed.
3. Hold spring retainer and tighten lock nut.

Adjust Idle Speed

1. With engine running at normal operating temperature, and with buffer screw backed out to avoid contact with differential lever, turn idle speed adjusting screw until proper idle speed of 450-500 rpm is obtained. However, idle speed may vary with special engine applications, Fig. 26.
2. Hold idle screw and tighten lock nut.
3. Install spring retainer cover.

Adjust Buffer Screw

1. With engine running at normal operating temperature, turn buffer screw in so that it contacts the differential lever as light as possible and still eliminates engine roll, Fig. 27. *Do not increase idle speed more than 15 rpm with buffer screw.*
2. Hold buffer screw and tighten lock nut.
3. Recheck maximum no-load speed. If it has increased more than 25 rpm, back off buffer screw until increase is less than 25 rpm.

71 IN LINE LIMITING SPEED GOVERNOR

Adjust Governor Gap On Single Weight Units

1. With engine running at normal operating temperature, loosen idle speed adjusting screw lock nut, Fig. 28. Turn idle screw to obtain recommended idle speed, which is 550 rpm but may vary with special engine applications.
2. With engine stopped, remove governor cover.
3. Remove fuel rod, Fig. 29, between governor and injector control tube lever.
4. Using Tool J-5407, check gap between the low speed spring cap and high speed spring plunger.
5. If required, loosen lock nut and turn gap adjusting screw until a slight drag is felt on gauge.
6. Hold adjusting screw and tighten lock nut.
7. Recheck and adjust gap as necessary.
8. Install fuel rod and governor cover.

Adjust Governor Gap On Double Weight Units

1. With engine stopped after running it at operating temperature, remove cover from speed adjusting screws, Fig. 28, and cover on top of governor.
2. Set idle adjusting screw to ⅜″ projection beyond lock nut. Tighten lock nut.
3. Remove fuel rod from between governor differential lever to injector control tube lever, Fig. 28.
4. Start and run engine at 800-1000 rpm by manual operation of control tube. Do not overspeed engine.
5. With engine operating at 800-1000 rpm, set gap between low speed spring cap and high speed spring plunger at .0015″ by adjusting gap adjusting screw in operating shaft lever.
6. Hold adjusting screw and tighten lock nut.
7. Recheck and adjust gap if required.
8. Stop engine and install fuel rod and governor cover.

Position Injector Control Racks On Engines Using Fuel Modulator

When adjusting the fuel control racks be sure no interference is encountered from the fuel modulator. This may be assured by loosening the fuel modulator lever "U" bolt and moving the modulator lever along the injector control tube to avoid contact with modulator cam or adjacent cylinder head stud nut. When the modulator lever is in position, it may strike the cylinder head stud nut when the rack is moved toward the "off" posi-

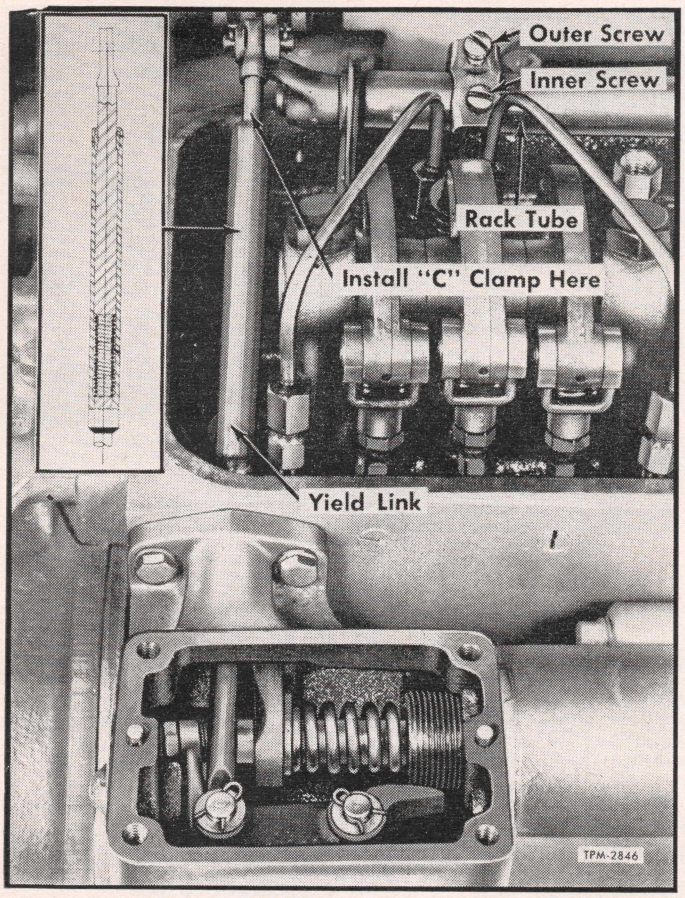

Fig. 32 Governor-to-injector rack yield link

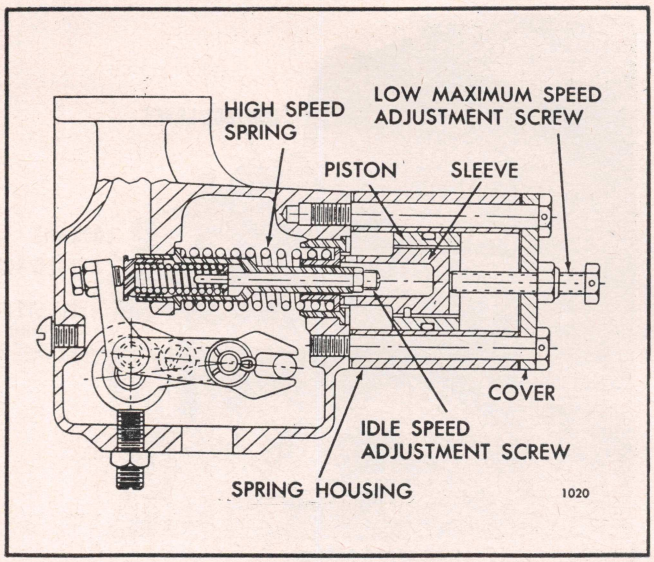

Fig. 33 Dual range limiting speed governor. In Line 71's

tion. The "no fuel" position is reached before this contact takes place and should therefore cause no concern.

1. Disconnect any linkage attached to governor control lever.
2. Loosen lock nut and back out buffer screw approximately 5/8", Fig. 30.
3. Loosen idle speed adjusting screw lock nut and back out idle screw until 9/16" of thread protrudes beyond lock nut.
4. Loosen all inner adjusting screws, Fig. 31. Be sure all control levers are free on injector control tube.
5. Move governor control lever to "full fuel" position. Turn inner adjusting screw down until a step up of effort is noted. This will place No. 1 injector rack in "full fuel" position. Turn down outer adjusting screw until it bottoms lightly on the injector control tube. Then alternately tighten inner and outer adjusting screws until tight.
6. Check setting of No. 1 injector rack by moving governor control lever toward "no fuel" position while holding governor-to-control tube link with light finger pressure, in a direction, toward the governor. This pressure will retain the low speed spring gap in the closed position when the throttle control lever is moved from the full speed position toward the idle position. A proper rack setting will be indicated by an immediate corresponding movement of the No. 1 injector rack from the "full fuel" position when the governor control lever is moved away from the "full speed" position.
7. If no immediate corresponding movement is observed, back off inner adjusting screw 1/8 of a turn and tighten outer adjusting screw. When setting is correct, the injector rack will be snug on the pin of the rack control lever and still maintain the movement mentioned in Step 6.
8. Remove clevis pin between fuel rod and injector control tube lever.
9. Manually hold No. 1 injector lever in "full fuel" position. Do not hold at end of control tube. Turn down inner adjusting screw of No. 2 injector until rack of No. 2 injector has moved into the "full fuel" position and the inner adjusting screw is bottomed on the injector control tube. Turn outer adjusting screw down until it bottoms lightly on injector control tube. Then alternately tighten inner and outer adjusting screws.
10. Recheck No. 1 injector fuel rack to be sure that it has remained snug on the pin of the rack control lever while adjusting No. 2 injector. If No. 1 rack has become loose, back off slightly on inner adjusting screw of No. 2 rack lever. Tighten outer adjusting screw. When settings are correct, the racks of both injectors must be snug on the pin of their respective rack control levers.
11. Position remaining rack control levers as outlined in Steps 9 and 10.
12. Insert clevis pin between fuel rod and injector control tube lever.
13. Reset idle speed adjusting screw, Fig. 30, until it projects 3/8" beyond lock nut and tighten lock nut.

Position Injector Control Racks On Units Without Fuel Modulator

1. Disconnect any linkage attached to control lever.
2. Loosen lock nut and back out buffer screw 5/8".
3. Loosen all control lever adjusting screws, being sure all control levers are free of the injector control tube.

NOTE—On some vehicle units a yield link is used between the governor and injector control rack, Fig. 32. It is necessary that a small "C" clamp be installed at the rod shoulder to provide a temporary solid rod. This is important since it prevents the possibility of compressing the yield link spring while setting the injector racks.

4. Move control lever to "full fuel" position. Turn inner adjusting screw down until a slight movement of the control tube is observed or a step up of effort is noted. This will place No. 1 injector rack in the "full fuel" position. Turn down outer adjusting screw until it bottoms lightly on the injector control tube. Then alternately tighten both the inner and outer adjusting screws.
5. With governor control lever held in "full fuel" position, check for a slight movement of the injector control tube lever. This movement should not exceed .005".
6. If no movement is observed, back off inner adjusting screw 1/8 of a turn and tighten outer adjusting screw. If movement exceeds .005", back off outer adjusting screw 1/8 of a turn and tighten inner adjusting screw. When the setting is correct, the injector rack will be snug on the pin of the rack control lever and still maintain the .005" movement.

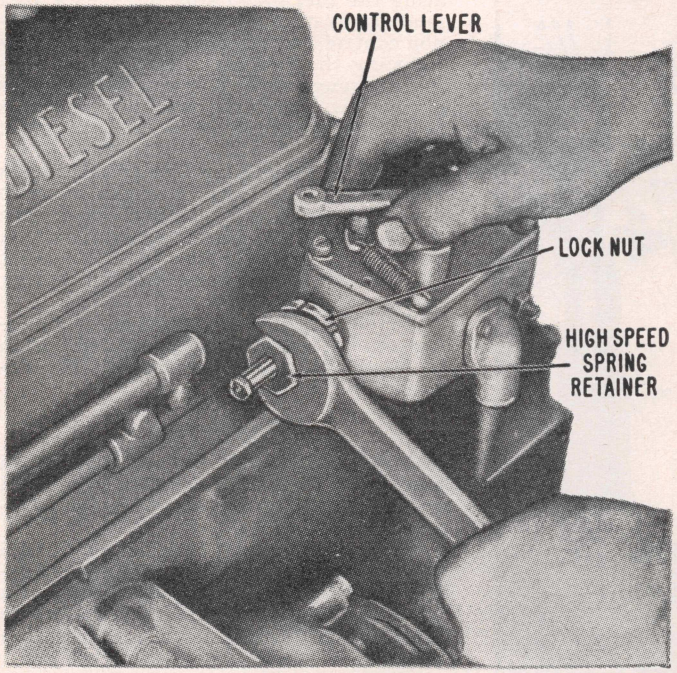

Fig. 34 Adjusting maximum no-load speed. In Line 71's

7. Set the racks as outlined in Steps 8, 9 and 10 for units with the fuel modulator.
8. After completing the rack settings, remove the "C" clamp from fuel rod of units having a yield link, Fig. 32.

Adjust Maximum No-Load Speed On Dual Range Units

With injector racks set and buffer screw backed out, adjust as follows:

1. With governor assembled as shown in Fig. 33 and low maximum speed adjusting screw extending from the spring housing cover ¾" beyond the lock nut, start engine and position engine throttle in maximum speed position. To stop air leakage between piston and sleeve, coat mating threads with a suitable sealer.
2. Loosen lock nut and turn low maximum speed adjusting screw until desired no-load high maximum speed is obtained.
3. Stop engine and remove spring housing.
4. Remove piston and sleeve from spring housing.
5. Turn piston on sleeve until piston is flush to $\frac{1}{64}$" below end of spring housing when piston and sleeve are placed into spring housing and held tight against adjusting screw.
6. Replace piston and sleeve in spring housing and assemble to governor.
7. Start engine and position engine throttle in maximum speed position and apply air pressure to governor cylinder. To overcome the tension of the high speed spring, 50 psi air pressure will be required in the governor cylinder.
8. Back out adjustment screw ¼". If piston is adjusted correctly, the engine will operate at the recommended high maximum no-load speed set.
9. Remove air pressure from governor cylinder.
10. Make minor adjustment on piston to establish exact speed desired.
11. Adjust low maximum speed adjusting screw with engine operating and governor control lever held in "full fuel" position until desired speed is obtained. Turn screw inward to increase or outward to decrease engine speed. Tighten lock nut and recheck engine speed.

Adjust Maximum No-Load Speed On Units Without Dual Range Feature

If the governor has been reconditioned or replaced, and to ensure the engine speed will not exceed the recommended no-load speed as given on the unit name plate, adjust as follows:

1. Loosen lock nut and back off high speed spring retainer five turns, Fig. 34.
2. With engine at operating temperature and no load on the engine, place control lever in "full fuel" position. Turn high speed spring retainer in until engine is operating at recommended no-load speed.
3. Hold spring retainer and tighten lock nut.

Adjust Idle Speed

1. Refer to Fig. 33 and remove spring housing to uncover idle speed adjusting screw on dual range governors.
2. With engine running at normal operating temperature and with buffer screw backed out to avoid contact with differential lever, turn idle screw until the engine idles at recommended speed, Fig. 30. Recommended idle speed is 550 rpm for single weight limiting speed governors and 400 rpm for double weight limiting speed governors but may vary with special engine installations.
3. Hold idle screw and tighten lock nut.
4. Install spring housing cover and retain with two bolts.

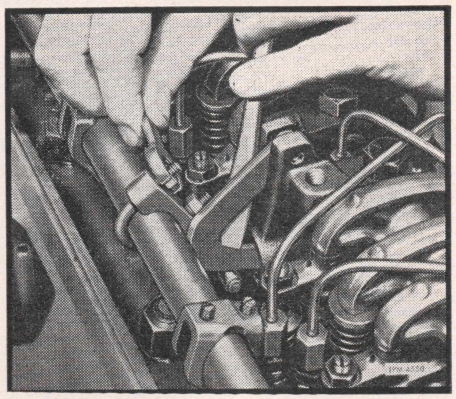

Fig. 35 Fuel modulator adjustment In Line 71's

Adjust Buffer Screw

1. With maximum no-load and idle speeds properly adjusted, screw in buffer screw (with engine idling at operating temperature) so it contacts differential lever as lightly as possible and still eliminates engine roll. *Do not increase engine idle speed more than 15 rpm with buffer screw.*
2. On Series 71E and 71T engines, recheck maximum no-load speed. If it has increased more than 25 rpm from the top speed attained above, back off buffer screw until increase is less than 25 rpm.
3. Hold buffer screw and tighten lock nut.

Fuel Modulator, Adjust

A fuel modulator is installed in the cylinder head on turbocharged models, Fig. 35. This unit is controlled by air box pressure and operates in such a manner that the fuel injector racks are retarded as air box pressure drops due to reduced engine rpm. In addition, engine racks cannot move into full speed position until air box pressure is sufficient to provide proper combustion.

The following adjustments should only be performed after the other adjustments have been completed.

1. Hold fuel modulator piston and cam in high speed position by applying not less than 20 psi air pressure to piston or by prying cam out with a screwdriver, Fig. 35.
2. Hold injector rack in "Full Fuel" position. While holding injector rack, move fuel modulating lever and roller assembly until roller contacts cam; then carefully tighten clamping nuts on "U" bolt. Avoid changing position of roller while tightening clamp nuts.
3. Check adjustment several times as follows to be sure it is correct: Pry cam out with screwdriver. Move injector control tube to "Full Fuel" position. Relax pressure on screw-

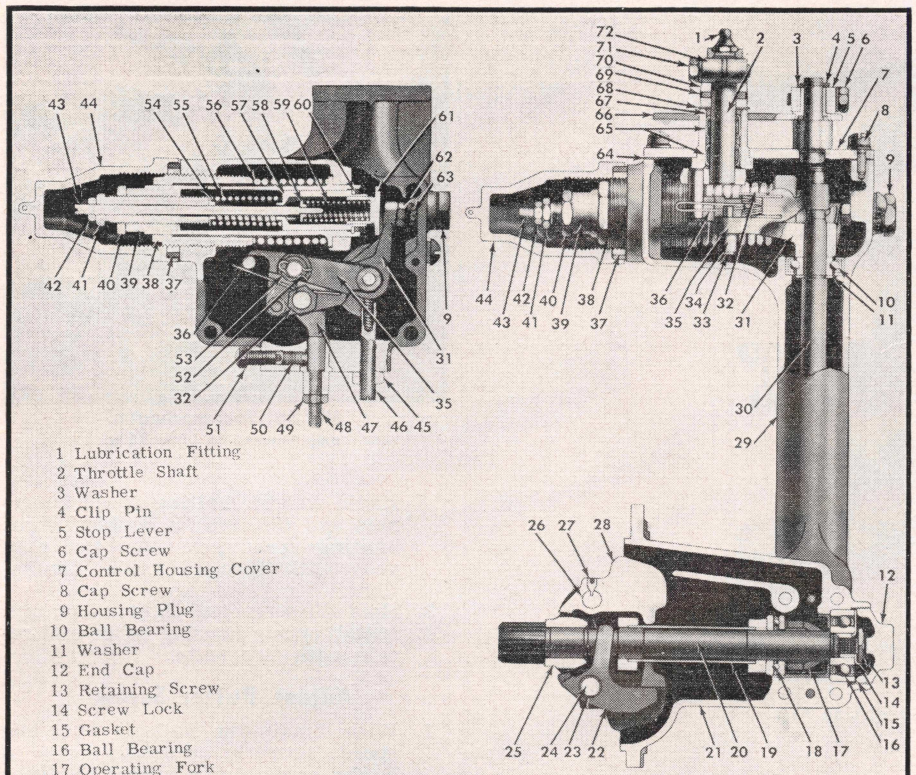

1 Lubrication Fitting
2 Throttle Shaft
3 Washer
4 Clip Pin
5 Stop Lever
6 Cap Screw
7 Control Housing Cover
8 Cap Screw
9 Housing Plug
10 Ball Bearing
11 Washer
12 End Cap
13 Retaining Screw
14 Screw Lock
15 Gasket
16 Ball Bearing
17 Operating Fork
18 Thrust Bearing
19 Riser
20 Weight Shaft
21 Weight Housing
22 High Speed Weights
23 Needle Bearings
24 Weight Pin
25 Weight Carrier
26 Weight Pin
27 Set Screw
28 Low Speed Weights
29 Control Housing
30 Operating Shaft
31 Operating Lever
32 Torsion Spring Screw
33 Roller Pin
34 Roller
35 Differential Lever
36 Torsion Spring
37 High Speed Lock Nut
38 High Speed Adjusting Screw
39 High Speed Spring Plunger
40 Modulating Screw Lock Nut
41 Modulating Speed Adjusting Screw
42 Idle Speed Screw Lock Nut
43 Idle Speed Adjusting Screw
44 Adjustment Cover
45 Buffer Screw Lock Nut
46 Buffer Screw
47 Modulating Cam
48 Cam Adjusting Screw
49 Screw Lock Nut
50 Cam Lock Screw
51 Plugging Screw
52 Clip Pin
53 Washer
54 Modulating Spring Seat
55 Modulating Spring
56 High Speed Spring
57 Modulating Spring Plunger
58 Low Speed Spring Seat
59 Low Speed Spring
60 Retainer Ring
61 Low Speed Spring Cap
62 Lock Nut
63 Low Speed Gap Adjusting Screw
64 Cover Gasket
65 Roller Bearings
66 Control Cam
67 Seal
68 Seal Washer
69 Taper Pin
70 Control Lever
71 Cap Screw
72 Throttle Lever

Fig. 36 Sectional view of fuel modulating governor

driver slightly and allow cam to move in slightly. If properly set, the roller will rotate as soon as cam moves.

IN LINE 71 FUEL MODULATING GOVERNOR

This unit, Fig. 36, was developed to improve combustion and fuel economy during low-speed full-throttle operation. This Fuel Modulator, incorporated with the mechanical limiting speed governor, automatically controls to fuel input to assure complete combustion, thus providing maximum fuel economy, clean exhaust and longer engine life. This control is assured regardless of the throttle setting maintained by the operator.

The governor includes a low speed spring a high speed spring, a set of low speed weights and a set of high speed weights.

In addition, the governor incorporating the fuel modulator includes a fuel modulator spring which provides governor control for the purpose of gradually reducing the fuel input in the fuel modulating range. Over this speed, the forces of the low speed and modulator springs react against the force of the high speed weights.

The fuel modulator spring tension is set so that the injector racks start to leave the "full in" position as engine speed is reduced. Engine speed at which this occurs is controlled by the weight and tension of the modulating spring used.

Fig. 37 charts the specified modulating and high speed spring combination to be used with each governor at the desired full load engine rpm.

Fuel Modulating Governors, R.P.M. and Springs

Governor Assembly	R.P.M.* Max.	R.P.M.* Min.	Modulator Spring	High Speed Spring
5113829	2300	1975	175# (G)	55# (Y)
5114156	2300	2075	225# (W)	55# (Y)
5183600	2300	2075	225# (W)	55# (Y)
5183604	2300	2075	225# (W)	55# (Y)
5183607	2300	2075	225# (W)	55# (Y)
5183609	2300	1975	175# (G)	55# (Y)
5183611	2300	1975	175# (G)	55# (Y)
5183613	2000	1650	70# (Y)	50# (R)
5183615	2300	1865	150# (B)	55# (Y)
5183708	2300	2075	225# (W)	55# (Y)

*R.P.M. given is full-load; to obtain no-load (floor setting) speed, add 125 R.P.M.

When engine is equipped with rubber damper full-load speed must not exceed 2000 R.P.M. When full-load speed in excess of 2000 R.P.M. is desired, engine must be equipped with fluid (viscous) damper)

Color stripe -- (W) white, (G) green, (B) brown, (Y) yellow, and (R) red.

Fig. 37

Adjustments

Governor adjustments should not be performed until the valve lash is checked and adjusted and the injectors are properly timed.

The adjustments which follow should be made in the sequence given. Any deviation from this order may result in an improperly adjusted governor. Refer to Fig. 36 as a guide for the identification of parts.

Fuel Modulating Spring Tension

Preliminary Procedures—Remove covers (44 and 7), plug (9) and gasket. Disconnect governor external control linkage and remove cylinder head cover. Loosen lock nut (42) and back out idle screw (43) until low speed spring (59) exerts no pressure on low speed spring cap (61). This may be determined by moving cap in and out. Use care not to back the screw out too far as it is possible to turn it completely out of the low speed spring seat (58).

If the type of fuel modulating spring (55) is not known (70, 150, 175 or 225 lbs. per inch) the high speed plunger assembly should be removed from the governor, retainer ring (60) removed and the type of spring determined by color code, Fig. 37, before proceeding with following adjustment.

Loosen lock nut (37) and turn high speed adjusting screw (38) into body until flats on end of high speed spring plunger (39) are fully exposed.

Loosen lock nut (40) and turn modulating screw (41) out by hand until plunger (57) may be moved back toward high speed plunger $\frac{1}{16}$" before touching spring.

Adjustment—Turn screw (41) in by hand until resistance indicates that spring has forced plunger forward to contact retainer ring (60). Repeat as necessary until sure that plunger is just contacting ring with no tension on spring. Then turn screw (41) in a sixth of a turn (one flat). Lock adjustment with lock nut (40).

The plunger (39) and modulating spring adjusting screw (41) should both be held securely with two wrenches when tightening lock nut (40) to prevent screw and plunger relationship from being disturbed.

Low Speed Spring Gap Setting

Preliminary Procedures—Reset idle adjusting screw (43) to 2" projection ("A", Fig. 38) and replace control housing cover. *Be sure that throttle shaft pin is*

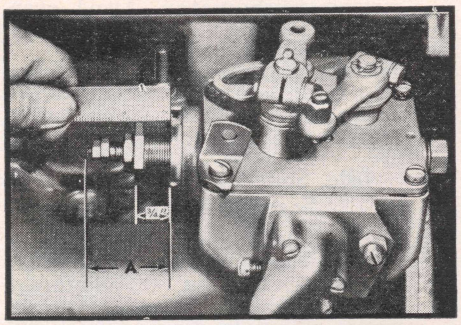

Fig. 38 Preliminary adjustment (3/4") of low and high speed springs

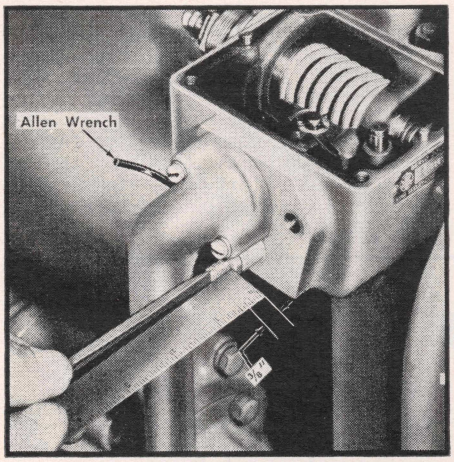

Fig. 39 Preliminary adjusting (3/8) of modulating cam

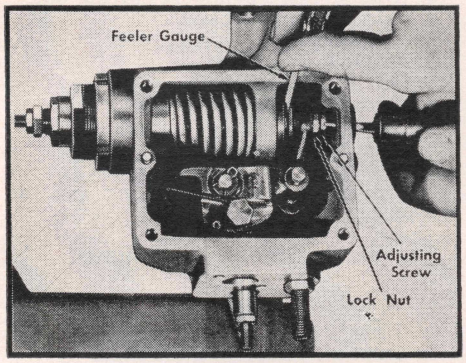

Fig. 40 Low speed spring gap adjustment

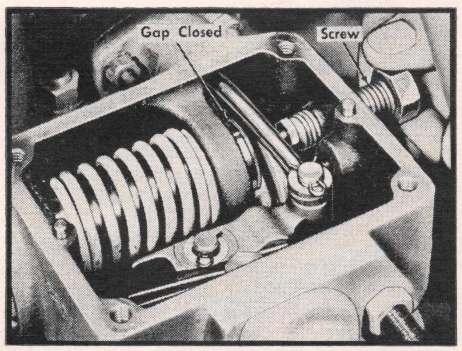

Fig. 41 Closing modulator gap with special screw

positioned between torsion spring (36) and end of differential lever (35).

Start engine and make preliminary idle speed setting at 385 rpm with low speed screw (43) and advancing speed to 400 rpm by turning in buffer screw (46). Tighten low speed lock nut (42) and stop engine.

Remove governor control housing cover and lever assembly (7). Remove gasket. Disconnect link rod between differential lever and injector control tube lever, then remove link through governor.

Thread buffer screw (46) outward 4 or 5 turns. Loosen cam adjusting screw lock nut (49). Remove plugging screw (51) and use Allen wrench to loosen cam lock screw (50) approximately 1/8 turn to permit cam to be moved in and out without allowing it to turn in housing.

Thread cam adjusting screw (48) into housing until screw extends 3/8" beyond lock nut when nut is against sleeve (Fig. 39). Tighten cam lock screw with Allen wrench to hold cam in position until adjusted later.

Start engine and operate between 600 and 700 rpm, using tachometer. Governor speed must be controlled by hand inasmuch as control linkage is disconnected.

Adjustment—Check gap between low speed spring cap (61) and modulating spring plunger (57) with .0015" feeler gauge (Fig. 40). If gap is not within .001-.002" at 600-700 rpm, loosen lock nut and turn adjusting screw as necessary to obtain proper gap. Tighten lock nut and recheck gap.

Fuel Modulating Gap Closing

Preliminary Procedures—Install control link between differential lever and injector control tube lever, being sure link is not binding.

Start engine and control speed manually by exerting force against torsion spring (36) with finger.

Adjustment — Advance engine speed gradually until low speed spring cap (61) contacts high speed plunger (38). Do not exceed 2100 rpm. Gap closing speed should be checked with a .0015" feeler between mating surfaces of (61) and (38). The speed will vary according to the following table:

Spring Color	Closing Speed
White	1950-2040
Green	1850-1940
Brown	1750-1840
Yellow	1525-1625

If closing speed does not fall in the correct range, recheck the preceding adjustments. If the preceding adjustments are correct and the closing speed still does not fall within the proper range, a new modulating spring should be installed.

Fuel Modulating Cam Setting

Preliminary Procedures—With engine stopped, set high speed adjusting screw so it extends 3/4" beyond its lock nut when nut is tight against housing (Fig. 38).

Temporarily install cap screw (1/2-13x2") into front of control housing and thread screw inward until gap between low speed cap and high speed spring plunger just closes, Fig. 41, being careful that plunger is not moved.

Fig. 42 Modulating cam adjustment

Fig. 43 Adjusting No. 1 rack to fuel modulating governor

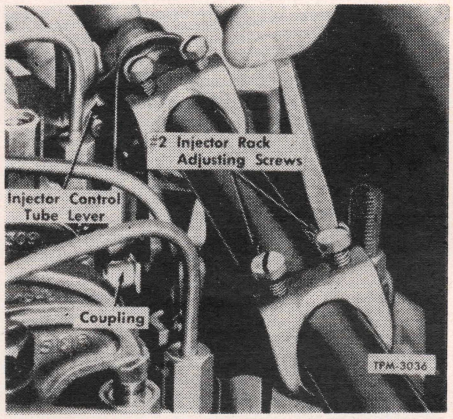

Fig. 44 Adjusting No. 2 rack to No. 1 rack

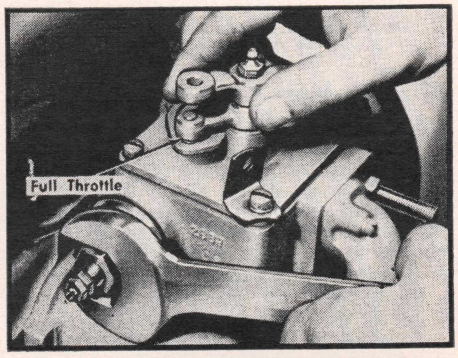

Fig. 45 High Speed Adjustment

Loosen inner and outer adjusting screws at each control rack lever until each lever is free on control tube. Install governor control housing gasket and cover, being sure that throttle shaft pin is between differential lever (35) and torsion spring (36).

Adjustment—Loosen cam lock screw (50) with Allen wrench 1/8" turn to permit turning cam adjusting screw (48) with fingers. If lock screw is backed out further, cam may be released by its own weight out of the operating position.

With control lever in full throttle position, Fig. 42, thread cam adjusting screw outward with finger tips until cam can be felt bottoming against roller (34) on the bottom of the differential lever (35). Thread cam adjusting screw outward an additional 1/8 turn to provide positive engagement between differential lever roller and cam. After making contact it may be necessary to turn the screw very slightly in or out to produce the final 1/64" clearance illustrated in Fig. 42, which is required after the Allen screw has been tightened.

Injector Rack Setting

1. Manually hold control lever in full throttle position, Fig. 43.
2. Adjust No. 1 injector rack lever, Fig. 43, so that very light finger tip pressure at the coupling *will produce a tendency to roll, but coupling should not be loose.*
3. Hold injector control tube for "feel" while adjusting remaining control rack couplings, Fig. 44.
4. Adjust No. 2 rack control lever so that it has the same "feel" as No. 1 coupling.
5. Repeat this procedure on all remaining racks. That is, compare No. 3 with No. 1 etc., making sure no other injector is tighter than No. 1.

No Load High Speed Setting

1. Remove the temporarily installed cap screw and install the control housing plug and gasket.
2. Loosen high speed adjusting screw lock nut if tight.
3. Install cylinder head cover.
4. Start engine and move throttle lever toward full fuel position while observing tachometer. Avoid overspeeding engine more than 100 rpm above desired speed.
5. Turn high speed adjusting screw (39) until desired speed is obtained with throttle lever in wide open position, Fig. 45, and tighten lock nut.

Idle Speed and Buffer Screw Setting

1. With engine running at idle speed, observe engine rpm on tachometer. Then loosen lock nut (42) and thread idle adjusting screw (43) in to increase or out to decrease until 385 rpm is obtained. Tighten lock nut.
2. With engine running at idle speed, thread buffer screw (46) in until "surge" or "roll" of engine just disappears, but not higher than 400 rpm. Variation from this speed will affect fuel modulating action.
3. Do no raise engine more than 20 rpm with the buffer screw, otherwise it may not be possible to stop the engine. Hold screw (46) and tighten lock nut. Start and stop engine several times to be sure of its stopping.

Trouble Shooting

Hard Starting

1. Throttle not in starting position.
2. Emergency shut-off valve at blower is partially or completely closed.
3. Fuel tank empty, fuel filter empty, or fuel pump not primed.
4. Improper injector timing or rack setting.
5. Insufficient fuel or faulty fuel pump.
6. Improper grade and type of fuel.
7. Improperly filtered fuel.
8. Fuel diluted with water.
9. Air in fuel supply system.
10. Low compression due to valves in poor condition, improper valve lash, worn or scored pistons or liners.
11. Defective blower.
12. Defective injector.

Uneven Running & Excessive Vibration

1. Faulty injector timing or rack setting.
2. Fuel supply insufficient.
3. Governor adjustment.
4. Coolant temperature too low. Inspect and test thermostat in water manifold and in shutter.
5. Valves in poor condition. Check compression pressure as outlined at the end of this section.

One or More Cylinders Cut Out

1. Remove valve cover.
2. Run engine at idle speed.
3. Check valve lash on all cylinders with engine hot—should be .009"
4. Operate engine at 600-800 rpm.
5. Cut out each cylinder in turn. Injector is cut out by holding follower down with screwdriver. If a decrease in speed is noted, it indicates that the injector is working. If no increase in speed is noted, the injector is not functioning.
6. Stop engine and remove fuel line from injector to return manifold.
7. Hold finger over injector fuel outlet and crank engine with starter. A gush of fuel at injector while starter is turning engine indicates ample fuel supply.
8. Remove injector and replace with a new one. If no spare injector is at hand, repair or clean injector and spray tip.
9. If the new or repaired injector has not eliminated the condition, the compression pressure of the cylinder in question should be checked.

Air In Fuel System

1. Disconnect fuel return line and run engine. Observe if air bubbles are discharged with fuel. This can best be done by submerging the end of the pipe in an open can of fuel.
2. Remove one fuel pipe to injector at end of engine which is highest (if standing on uneven ground) and install combination sight glass and pressure gauge fixture. Air bubbles will show up in sight glass.
3. If air is present, inspect all fuel line connections from suction side of fuel pump to the fuel tank. Inspect for cracked tubing flared ends; primary filter gasket; holes chafed through fuel suction line; cracks arising from screwing fittings in too tight at fuel pump and filter.

Engine Stalls Frequently

1. Idling speed too low.
2. Coolant temperature too low.
3. One or more cylinders cutting out.
4. Governor surging. Remove all bind from injector control rack operating shaft mechanism.
5. Clogged fuel oil filters.
6. Unsatisfactory injectors.
7. Improper governor adjustment.
8. Governor linkage incorrectly set.
9. Air in fuel system.

Loss of Power

1. Injector racks improperly positioned.
2. Faulty injector timing.
3. One or more cylinders cutting out.
4. Air cleaners choked.
5. Insufficient fuel supply.
6. Choked fuel filter.
7. Air in fuel system.
8. Unsatisfactory injectors.
9. Improper governor adjustment.
10. Loss of compression.
11. Fuel tank air vent plugged.
12. Governor low-speed spring gap improperly adjusted.

Black Smoke In Exhaust

1. Poor grade of fuel.
2. Injector timing late.
3. Unsatisfactory injector.
4. Inlet air restriction too high.

Blue Smoke In Exhaust

1. Injector racks not properly positioned.
2. Cylinder cutting out.
3. Lubricating oil entering combustion chambers: (a) Piston rings worn or stuck, oil rings assembled incorrectly. (b) Oil leaks into air box or blower housing due to leaky gasket or blower rotor shaft seals. (c) Oil level too high in air cleaners.
4. Engine temperature too low.

Engine Detonates

If a hard metallic knock indicates detonation in one or more cylinders, the engine must be stopped immediately to prevent serious damage due to excessive pressure accompanying detonation. Detonation is caused by the presence of fuel

or lubricating oil in the air charge of the cylinders during the compression stroke. The engine should be checked for:

1. Leaky injectors. Locate bad cylinder by cutting out injectors one at a time.
2. Leaking fuel connections in cylinder head.
3. Crankcase dilution due to fuel leaks. Drain and refill crankcase with specified oil. Inspect air box and blower and clean out with compressed air. Inspect piston rings.
4. Oil pull-over from air cleaners.
5. Leaky blower housing gasket.
6. Leaky blower oil seals.
7. Plugged air box drains.

Lack of Lube Oil Pressure

1. Oil supply in crankcase low, allowing pump to suck air.
2. Crankcase oil diluted by fuel oil. Observe odor of oil from crankcase for traces of fuel. Check for fuel oil leaks.
3. Use of improper lube oil.
4. Worn main or rod bearings.
5. Oil pressure relief valve sticking.
6. Oil cooler plugged.
7. Oil pump screen plugged.
8. Oil pump drive inoperative.
9. Oil lines choked, improperly tightened or ruptured gaskets.

Engine Runs Unevenly or Stops Frequently

These conditions are caused by water in fuel or low fuel pressure. Water in fuel necessitates draining fuel tanks and filling with clean fuel oil. Disconnect fuel line and allow engine to run and discharge fuel into a container until fuel system is purged.

Checking Compression Pressure

1. Remove valve rocker cover.
2. Start on No. 1 cylinder and remove fuel lines from both injector and fuel connectors.
3. Remove injector from No. 1 cylinder and install a 1000-lb. compression gauge in its place.
4. Use one of the fuel lines as a jumper connection between the fuel inlet and return manifold connectors. This will permit fuel from the inlet manifold to flow directly to the return manifold.
5. Run engine at approximately 500 rpm and take readings on the gauge. Do not take compression pressure by cranking engine with starter.
6. Perform this same operation on each cylinder in turn. The compression pressure on any one cylinder should not drop below 385 lbs., nor should the pressure for any one cylinder be more than 25 lbs. below the reading on the others.

Blower & Turbocharger Section

DESCRIPTION

The blower supplies fresh air required for combustion and scavenging. Its operation is similar to that of a gear type oil pump. Two rotors revolve in a housing bolted to the engine. The revolving motion of the rotors provides a continuous and uniform displacement of air.

On Series 53 In-Line and 6V-53 engines, two hollow double lobe rotors are used. On Series 71 and V-71 engines, the two rotors have three lobes and are made in a twisted or helical form. On 12-cylinder engines, two 6V blowers, coupled together by means of a chain and sprocket, are mounted in tandem on the top deck of the engine.

The blower rotors are timed by the two gears at one end of the rotor shafts. This timing must be correct otherwise the required clearance between rotor lobes, obtained by the use of shims behind the gears, will not be maintained.

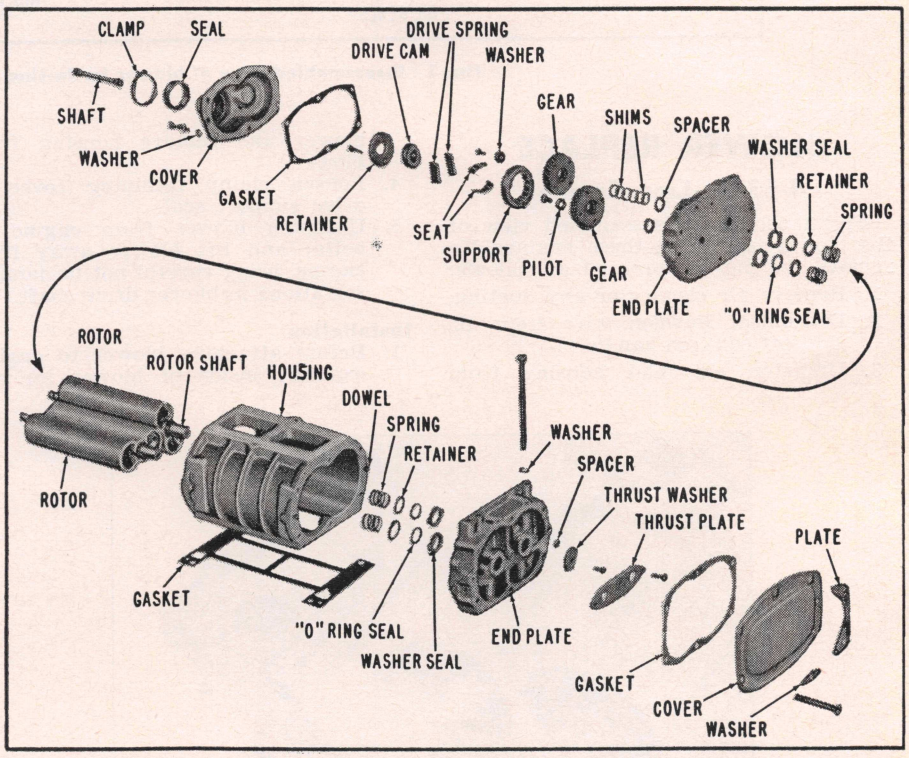

Fig. 1 Disassembled view of Series 53 four cylinder engine blower

BLOWER INSPECTION

A blower with a removable air inlet housing may be inspected for any of the following conditions without being removed from the engine. However, the air filter and air inlet housing or air silencer must be removed from the blower.

CAUTION: When inspecting a blower on the engine with the engine running, keep fingers and clothing away from moving parts of the blower and run engine at low speeds only.

1. Dirt or chips, drawn through the blower, will make deep scratches in the rotor and housing and throw up burrs around such abrasions. If burrs cause interference between rotors or between rotors and housing, the blower should be removed from the engine and parts dressed down to eliminate interference, or the rotors should be replaced if they are badly scored.
2. Leaky oil seals are usually indicated by the presence of oil on the blower rotors or inside surfaces of housing. This condition may be checked by running the engine at low speed and directing a light into the rotor compartment at the end plates and the oil seals. A thin film of oil radiating away from the seal is indicative of an oil leak.
3. Worn blower drive resulting in a loose, rattling sound within the blower may be detected with the engine operating at idling speed. If a worn blower is suspected, the blower must be removed from the engine before repairs can be effected.
4. Loose rotor shafts or worn rotor shaft bearing surfaces will result in contact between rotor lobes, rotors and end plates, or rotors and housing.
5. Excessive backlash in blower timing gears usually results in rotor lobes rubbing throughout their entire length.

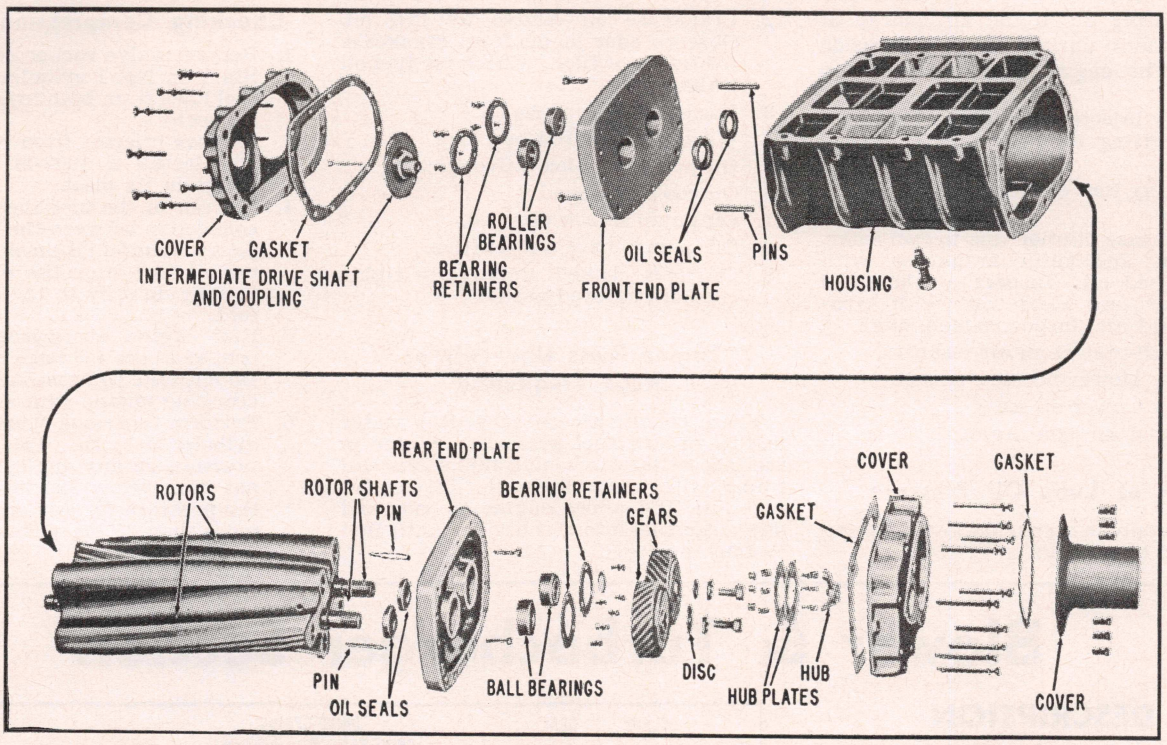

Fig. 3 Disassembled view of blower for In-Line 71 engines

BLOWER REPLACE

4-53 In-Line Engine

Fig. 1 shows a disassembled view of the blower used with these engines. To remove the blower, proceed as follows:

1. Remove air cleaner or any ducting.
2. Disconnect Bowden wire from air shut-off cam pin handle.
3. Unfasten air inlet housing from blower and remove housing from blower.
4. Loosen clamp retaining cover to drive support seal.
5. Unfasten blower from engine (4 bolts) and lift blower away from engine, being careful not to damage serrations in blower drive shaft.

Installation

1. Before attaching blower to engine, examine inside of blower for any foreign material and revolve rotors by hand to be sure they turn smoothly. Rough particles in the blower may score the rotors and impair blower efficiency.
2. Install a new blower-to-block gasket at blower mounting pad on engine. Use a non-hardening gasket cement on block side only.
3. Slide seal with clamp over end of blower drive shaft cover portion of rear end plate cover. Loosen blower drive support bolts prior to mounting blower to block.
4. Place blower on block locating flanges and slide assembly into position. Be careful not to damage gasket at blower mounting pad. Be sure that splines in blower drive shaft mesh with splines in cam in blower drive spring assembly.
5. Install blower-to-block mounting bolts and washers and torque to 46-50 ft. lbs.
6. Slide seal and clamp back against blower drive gear support and tighten clamp. Torque drive gear support bolts to 35 ft. lbs.
7. At this time, check backlash between blower drive gear and camshaft or balance shaft gear; should be .003″ to .005″ with new parts.
8. Install air inlet housing and air cleaner.

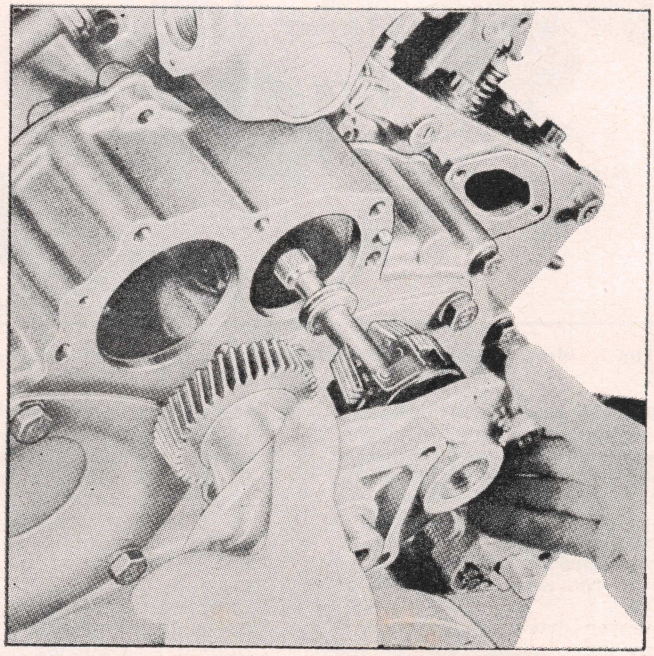

Fig. 2 Removing governor drive support. 6V-53 engine

6V-53 Engines

The blower and governor are bolted together and must be removed as an assembly, the procedure for which is as follows:

1. Disconnect linkage to governor control levers.
2. Remove cover from governor housing.

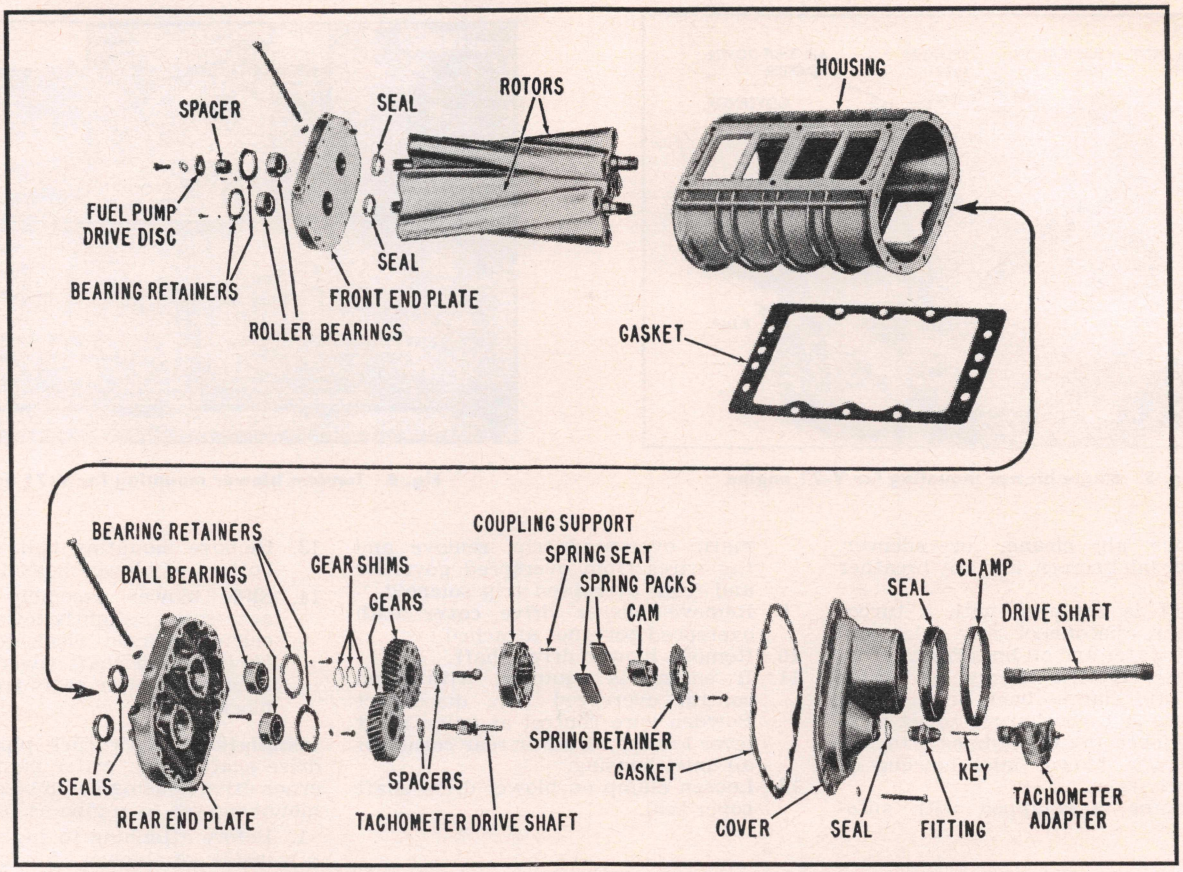

Fig. 4 Disassembled view of blower for V-71 engines

3. Remove spring housing from governor housing.
4. Remove spring assembly from governor.
5. Loosen hose clamps and slide hoses back on fuel rod covers.
6. Remove rocker cover from each cylinder head.
7. Disconnect lower fuel rod from each injector control tube lever and also from each upper fuel rod to governor.
8. Remove threaded pins connecting fuel rods to control link lever.
9. Remove upper fuel rods.
10. Remove blower drive cover plate. Remove retainer ring and withdraw blower drive shaft out of housing.
11. Remove governor drive support, Fig. 2.
12. Unfasten and remove blower and governor (4 bolts) from engine. Note that governor is doweled to rear end plate.
13. Unfasten governor housing (6 bolts) from blower rear end plate and remove governor housing and gasket.

Installation

1. Secure governor to blower rear end plate.
2. Install O-ring seal and two fiber gaskets on face of block between cylinder banks.
3. Lower blower and governor assembly onto engine. *The governor is doweled to the rear end plate, and the governor end of the blower must be placed in position before the blower can be lowered into position.*
4. Install blower mounting bolts and torque to 10-15 ft. lbs.
5. Attach a new gasket to blower drive support. On limiting speed governors, position the light (high speed) weights in a horizontal position to provide clearance, Fig. 2.
6. Move blower drive assembly straight in towards openings in flywheel housing until blower drive gear enters housing. The drive assembly must be turned slightly so that serrated end of governor weight shaft may pass around governor operating fork, permitting fork to slide into position between serrated end of shaft and the riser bearing. Push drive support up against flywheel housing. *Serrations in governor weight shaft and governor drive plate on timing gear must mesh. Also, blower drive gear must mesh with mating camshaft gear.*
7. Secure governor drive support to flywheel housing and torque bolts to 20-25 ft. lbs.
8. Insert blower drive shaft through blower drive gear hub. *It may be necessary to turn the crankshaft slightly so that serrations on each end of blower drive shaft will register with serrations in flexible coupling on blower timing gear and in blower drive hub.*
9. Install snap ring to secure blower drive shaft.
10. Install blower drive support cover with new gasket and torque bolts to 20-25 ft. lbs.
11. Tighten blower-to-block bolts to 45-50 ft. lbs.
12. Insert upper fuel rods through fuel rod covers, hoses and clamps and attach fuel rods to governor control link lever with link pins threaded into lever.
13. Attach lower fuel rods to injector control tube levers and upper fuel rods.
14. Slide fuel rod cover hoses in place and secure with clamps.
15. Install spring assembly as follows:
    a. Thread spring retainer lock nut onto retainer.
    b. Thread idle adjusting screw into governor spring plunger.
    c. Place high speed spring over governor spring plunger.
    d. Lubricate and install spring and plunger in retainer and secure with lock nut so that ¼″ of idle adjusting screw extends beyond nut.
    e. Lubricate and insert spring seat, low speed spring, and spring cap in open end of spring plunger.

Series 71 In-Line Engines

Fig. 3 shows a disassembled view of the type blower used with these engines. In most cases, removal of the blower, together with governor drive, water pump, fuel oil pump and blower drive shaft cover will be found advantageous.

1. Drain water from cooling system.
2. Remove governor.
3. Disconnect fuel lines at fuel pump.
4. Loosen water pump connections at pump cover and cylinder block.

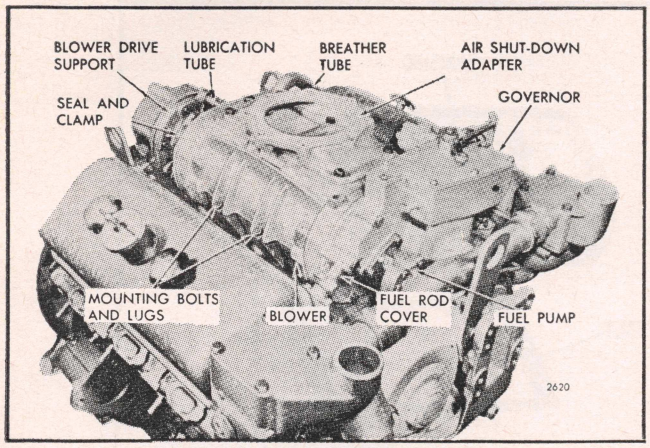

Fig. 5 Single blower mounting for V-71 engine

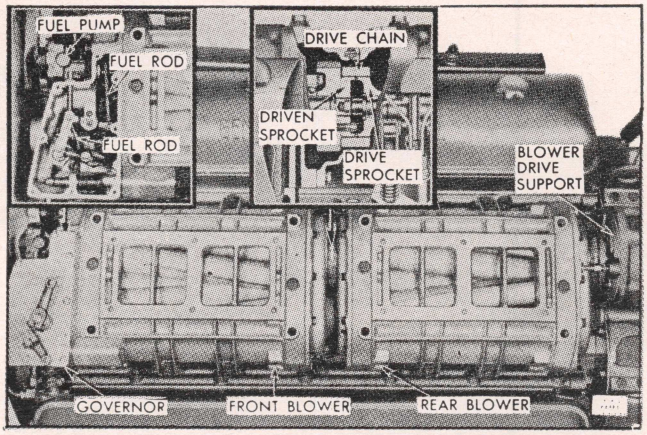

Fig. 6 Tandem blower mounting for V-71 engine

5. Remove air cleaner or silencer, blower inlet screen, and any breather pipes.
6. If unit is equipped with a turbocharger, disconnect any inlet and outlet water and oil lines from turbocharger. Loosen clamps and slide hose and clamps back on air inlet housing or turbocharger outlet tube.
7. Disconnect any other lines attached to blower, blower inlet housing or turbocharger.
8. If engine is equipped with automatic overspeed trip, remove and tag wires from overspeed governor and from overspeed trip solenoid.
9. Remove blower drive cover with overspeed governor attached.
10. Remove blower drive shaft.
11. If engine is equipped with hand control overspeed trip, disconnect Bowden wire control at valve shaft lever located at lower rear corner of air inlet housing.
12. Loosen clamp on blower drive shaft cover seal.
13. Remove mounting bolts at top and bottom of blower housing.
14. Slide blower assembly (including accessories) slightly toward forward end of cylinder block to withdraw blower drive shaft cover from seal, then pull blower away from cylinder block.

Installation: With fuel pump, blower drive shaft cover, water pump and governor drive housing assembled to blower, mount blower to engine as follows:

1. Before attaching to engine, examine inside of blower for any foreign material and revolve rotors by hand, checking for smooth turning.
2. Affix a gasket to cylinder block at blower mounting boss, using a non-hardening gasket cement on block side only.

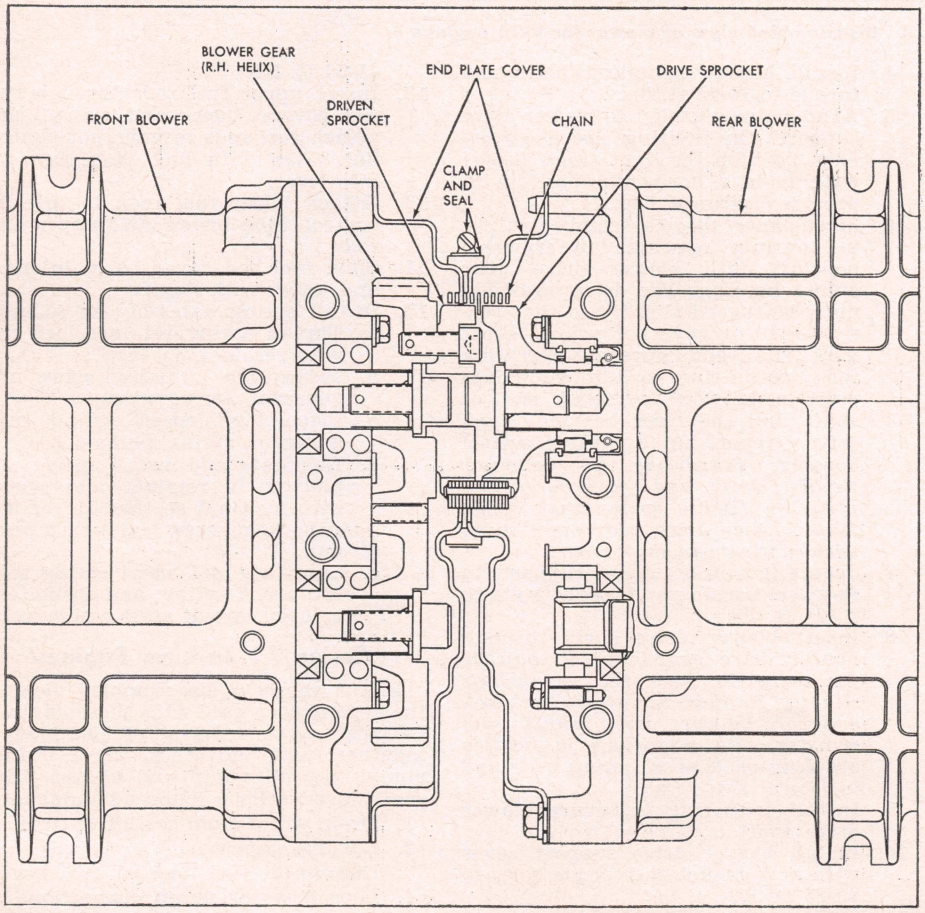

Fig. 7 Method of coupling tandem blowers together. V-71 engines

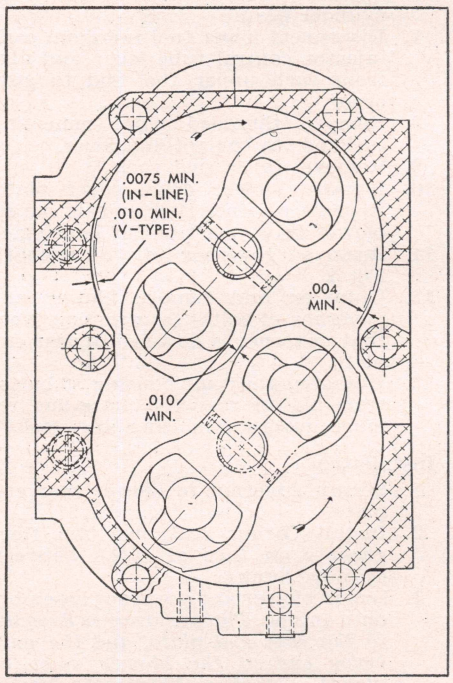

Fig. 8 Blower rotor clearances. Series 53 and 6V-53 engines

3. Slide a new seal with clamp over end of blower drive shaft cover.
4. Slip water pump outlet packing flange (flat face out) and new packing over pump outlet.
5. Avoid damage to gasket at blower mounting boss on cylinder block and slide blower into position.
6. Attach blower to block and torque bolts to 55-60 ft. lbs.
7. Slide seal and clamp back against blower drive gear support and tighten clamp.
8. Install blower drive shaft by pushing plain end (end without square hole) on shaft through blower drive coupling from rear of engine, thence into blower drive gear hub. It may be necessary to revolve rotors slightly to engage splines of drive shaft with those of gear hub.
9. When using "short" blower drive shaft, install lock ring in blower drive cam.
10. If equipped with an automatic overspeed trip, install blower drive cover and overspeed trip governor and attach wires to governor.
11. Install air inlet housing together with screen, striker plate and other parts located between inlet housing and blower. Also, install overspeed trip solenoid and attach wires to solenoid.
12. If equipped with hand control overspeed trip, connect Bowden wire control at valve shaft lever located at lower rear corner of blower air inlet housing.
13. Tighten bolts securing blower drive shaft cover to end plate cover.
14. Connect water pump outlet packing flange to cylinder block.
15. Install air cleaners, silencer or any breather pipes in air system.
16. Connect fuel lines to fuel pump.
17. Connect any water and oil lines from turbocharger (if equipped).
18. Connect any other lines attached to blower, inlet housing or turbocharger.
19. When filling cooling system, open vent valve at top of thermostat housing if so equipped.

V-71 Engines

Fig. 4 shows a disassembled view of a blower used on these engines, while Figs. 5 and 6 illustrate a single blower and a tandem blower mounting, respectively.

The engine governor components are assembled in a combination governor housing and blower front end plate cover. The fuel pump is also attached to the front end of the blower. Therefore, when removing the blower from the engine, the governor and fuel pump will also be removed at the same time.

1. Unfasten and remove air inlet housing from air shut-down housing.
2. Disconnect Bowden wire from air shut-down cam pin handle.
3. Remove shut-down housing (6 bolts).
4. Remove bolts which attach air inlet or air silencer adaptor to blower and remove adaptor and blower screen.
5. Loosen oil pressure line fitting from rear of blower-to-blower drive support.

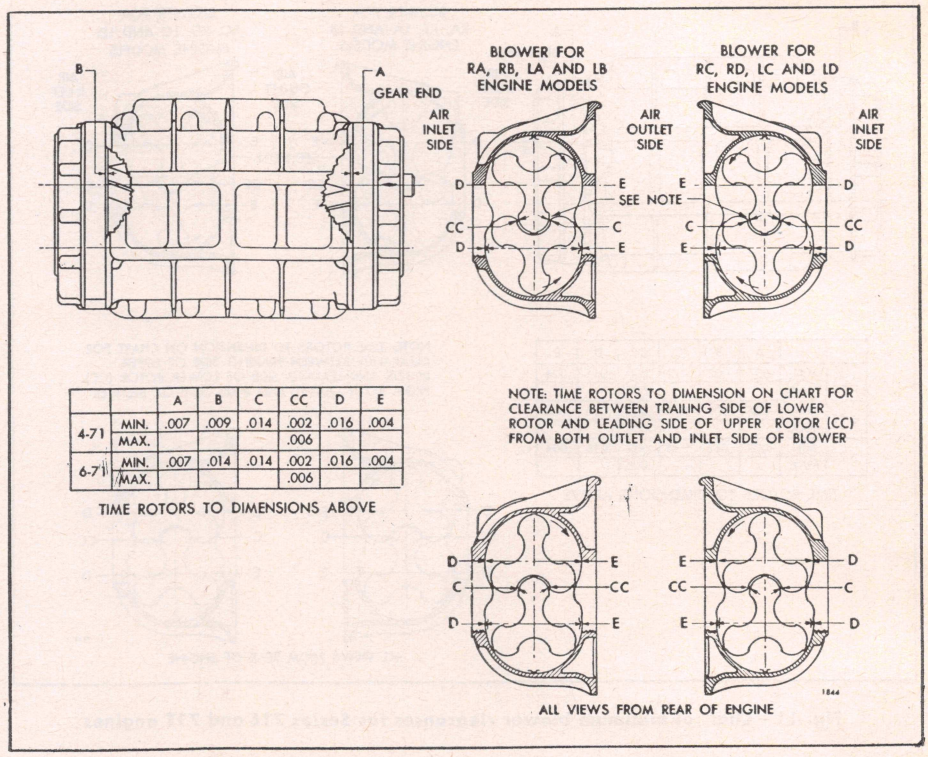

		A	B	C	CC	D	E
4-71	MIN.	.007	.009	.014	.002	.016	.004
	MAX.				.006		
6-71	MIN.	.007	.014	.014	.002	.016	.004
	MAX.				.006		

Fig. 9 Chart of minimum blower clearances for Series 3, 4 and 6-71 engines

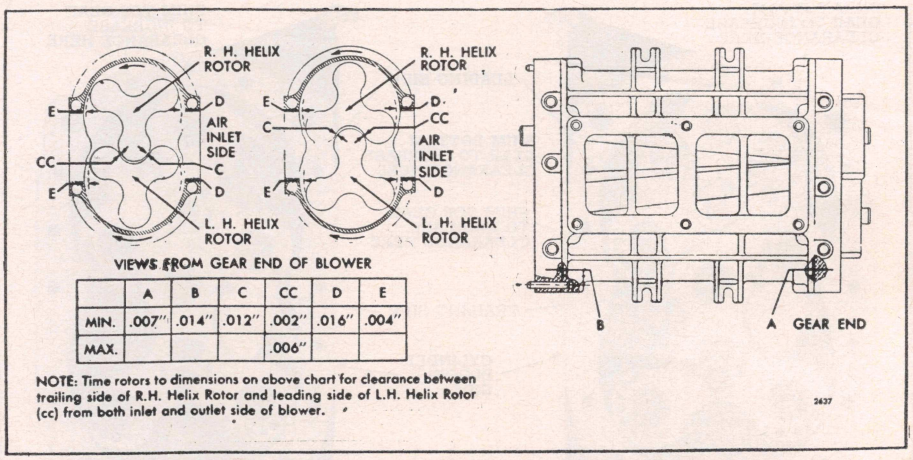

	A	B	C	CC	D	E
MIN.	.007"	.014"	.012"	.002"	.016"	.004"
MAX.				.006"		

NOTE: Time rotors to dimensions on above chart for clearance between trailing side of R.H. Helix Rotor and leading side of L.H. Helix Rotor (cc) from both inlet and outlet side of blower.

Fig. 10 Chart of minimum blower clearances for V-71 engines

6. Loosen hose clamp on blower drive support-to-blower seal.
7. On units with tandem blowers, loosen clamp securing seal between front and rear blowers.
8. Disconnect tachometer drive cable from adapter at rear of blower (if equipped).
9. Remove flywheel housing cover at blower drive support.
10. Remove snap ring and withdraw blower drive shaft from blower.
11. Loosen hose clamps and slide hoses back on by-pass tube between thermostat housings. Remove by-pass tube.
12. Remove fuel inlet and outlet lines to fuel pump. Also, remove fuel return cross-over tube between cylinder heads.
13. Remove or disconnect breather pipe at top of cylinder block.
14. Remove front engine lifter bracket if necessary.
15. Disconnect throttle control rods from governor.
16. Remove rocker cover from each cylinder head.
17. Remove governor cover (8 screws).
18. Remove fuel rods from both injector rack control tube levers.
19. Loosen hose clamps and slide governor fuel rod cover back on each side of governor.
20. Remove bolt through top of each end plate which secures blower to cylinder block.
21. Remove blower-to-block bolts, retaining lugs and washers on each side of blower.

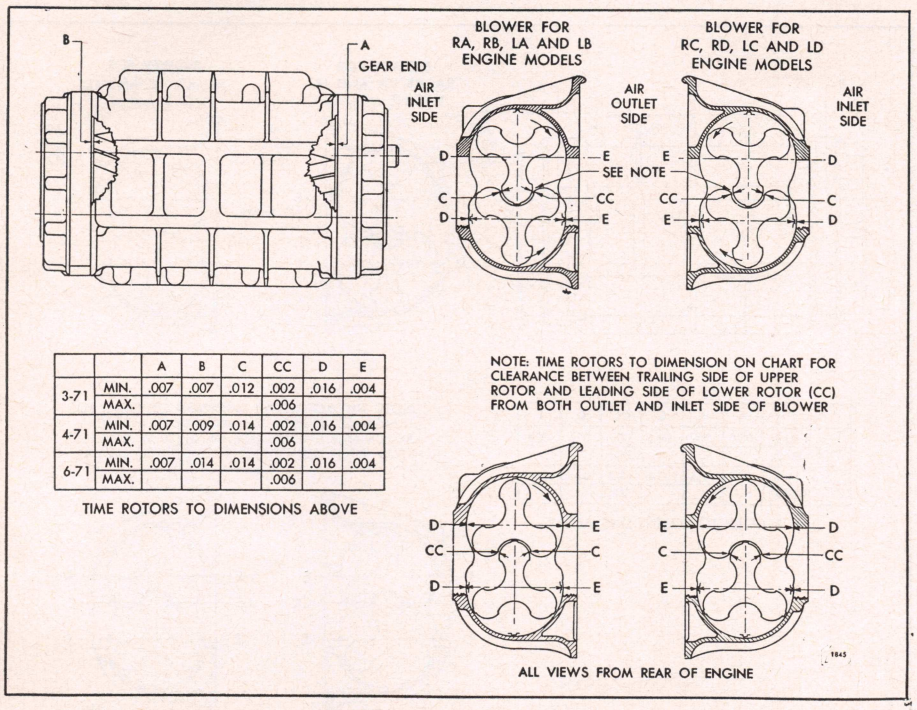

		A	B	C	CC	D	E
3-71	MIN.	.007	.007	.012	.002	.016	.004
	MAX.				.006		
4-71	MIN.	.007	.009	.014	.002	.016	.004
	MAX.				.006		
6-71	MIN.	.007	.014	.014	.002	.016	.004
	MAX.				.006		

Fig. 11 Chart of minimum blower clearances for Series 71E and 71T engines

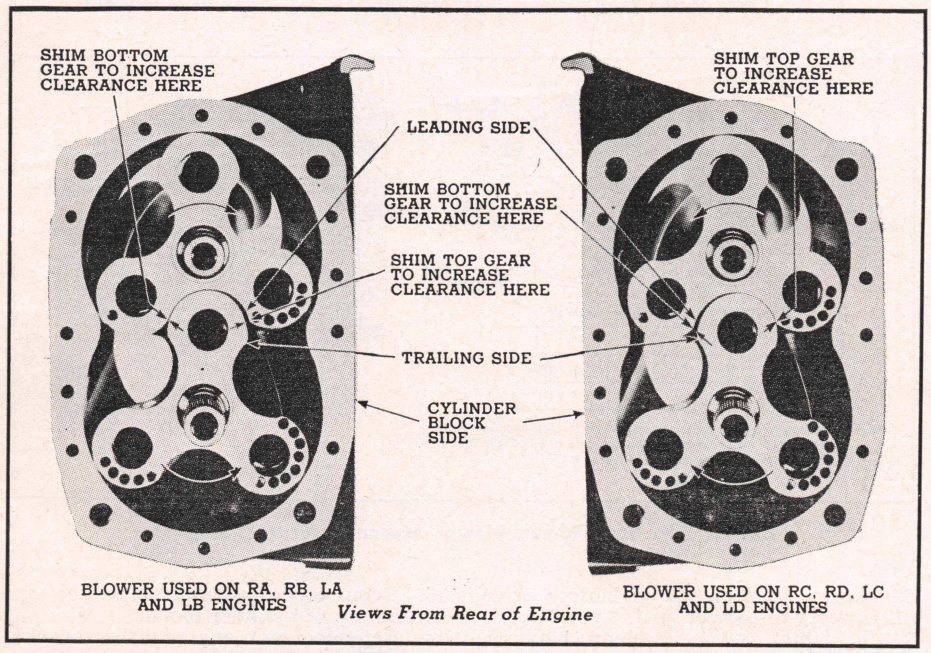

Fig. 12 Showing proper location of shims for correct rotor lobe clearances on Series 71 In-Line engines

22. Check to make sure any other tubing or accessories are disconnected which may interfere with removal of blower.
23. Thread eyebolts in diagonally opposite air inlet adaptor-to-blower tapped holes and attach a sling to a hoist.
24. Lift blower slightly and move forward to detach blower from seal at drive end. Then lift blower up and away from engine. *On units equipped with tandem blowers, the front blower must be removed first. Move front blower slightly forward to disengage drive chain from sprockets, then lift blower away from engine. Move rear blower forward to detach seal at rear of blower, then lift rear blower away from engine.*

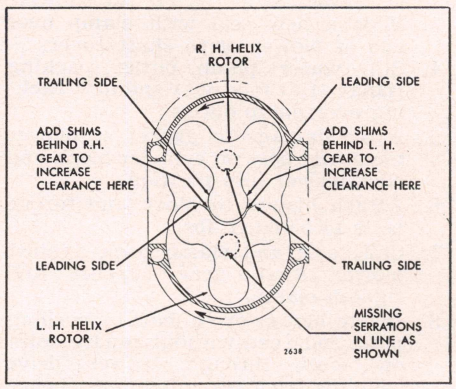

Fig. 13 Showing proper location of shim for correct rotor lobe clearances. V-71 engines

Installation: After end plate covers and accessories are installed on blower, refer to Figs. 5, 6 and 7 and install blower on engine.

First place a new blower gasket on top of cylinder block, using non-hardening cement to prevent gasket from shifting. Then lower blower in position and reassemble to engine by reversing the procedure used for removal.

Secure blower to cylinder block with bolts, retaining lugs and washers and torque bolts uniformly to 25 ft-lb in 5 ft-lb increments.

On tandem installations, install rear blower first. Position drive chain, blower seal and clamp on rear blower, then lower front blower in place. Make sure drive chain is in position on both the drive and driven sprockets, then slide seal into position and secure clamp.

TIME BLOWER ROTORS

Series 53 & 6V-53 Engines

If the blower has been disassembled, after it has been reassembled, the rotors must be timed. The rotors, when properly positioned, run with a slight clearance between rotor lobes and with a slight clearance between the lobes and housing walls. The necessary clearances may be established by moving one of the gears out or in on the shaft relative to the other gear. Moving the gears out or in on the rotors is accomplished by adding or removing shims between the gear hub and rotor spacers.

It is preferable to measure the clearances with a feeler gauge comprised of two or more feelers since a combination is more flexible than a single feeler gauge. Measurements should be taken from both the inlet and outlet sides of the blower.

The clearance between rotor lobes and housing is measured as shown in Fig. 8. Measurements should be taken across the entire length of each rotor lobe to be certain that a maximum clearance of .004" exists at the air outlet side of all blowers. A minimum clearance of .0075" should exist at the air inlet side of the In-Line engine blowers and .010" minimum for V-type engine blower. Similarly, the clearance between rotor lobes should be measured across the length of the lobes.

By rotating the gears, position the lobes so that they are at their closest relative position as shown in Fig. 8. The clearance between the lobes should be .010".

The clearance between the ends of the rotors and blower end plates should be .008" minimum at both end plates.

Series 71 & V-71 Engines

The rotors, when properly positioned in the housing, run with a slight clearance between the lobes, Figs. 9, 10, 11. This clearance may be varied by moving one of the helical gears in or out on the shaft relative to the other gear.

If the upper gear is moved out, the upper rotor will turn counterclockwise when viewed from the gear end. If the lower gear is moved out, the lower rotor will turn clockwise when viewed from the gear end.

Moving the gears in or out on the rotors is accomplished by adding or removing shims between the gear hub and the bearing back of the gears. Three .002" shims are required to revolve rotor .002".

Having determined the amount one rotor must be revolved to produce the proper clearance, observe the engine model on which the blower is to be used and add shims as required to produce the desired result, Figs. 12, 13.

TURBOCHARGER

A turbocharger is designed to increase the power output and improve the efficiency of an engine. Power to drive the turbocharger is extracted from waste energy in the engine exhaust gas.

The unit consists of a radial flow turbine, a centrifugal compressor, a bearing carrier which serves to support the rotating assembly, a main housing, a turbine housing and a compressor housing.

In operation, all exhaust gases from the engine pass through the turbine end of the assembly before they are discharged into the atmosphere. After the engine is started, the flow of exhaust gases will begin operating the turbocharger. During operation, the turbocharger responds to the engine load demands by reacting to the flow of exhaust gases and the corresponding air demand of the engine. Fig. 14. A cutaway view of a Turbocharger is illustrated in Fig. 15.

The compressor impeller is directly connected to the turbine which is driven by the engine exhaust gases. These hot exhaust gases expand through the turbine nozzle, and the turbine wheel, thus producing torque and power to drive the compressor. Intake air enters the compressor housing, flows through the impeller, is compressed and supplied to the inlet manifold of the engine.

The turbocharger responds to engine load demands without any control connections between engine and turbocharger. Regulation of the turbocharger is automatic, and is accomplished without any special couplings, gears or valves.

There are several model turbochargers available, each designed for a particular engine. The serial and model numbers

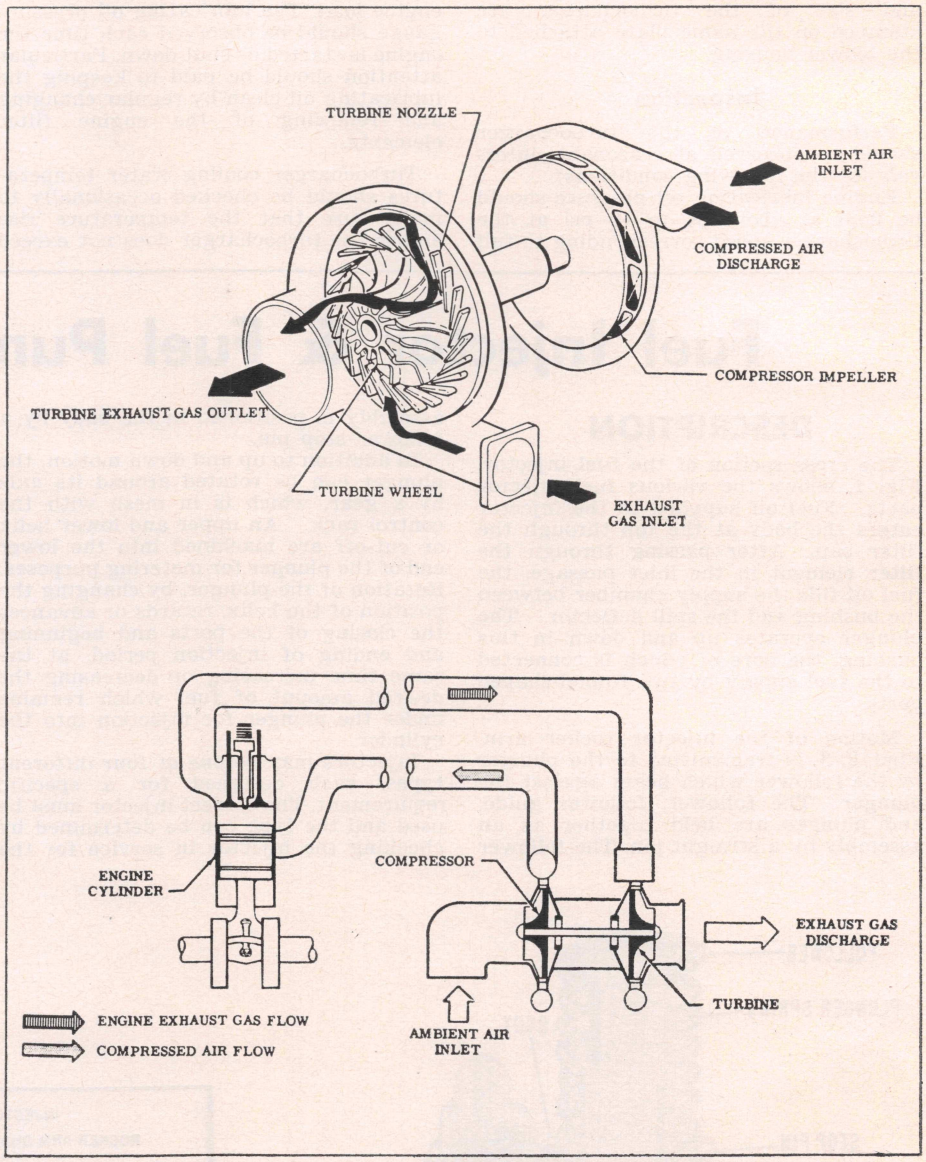

Fig. 14 Schematic flow diagram of a Turbocharger

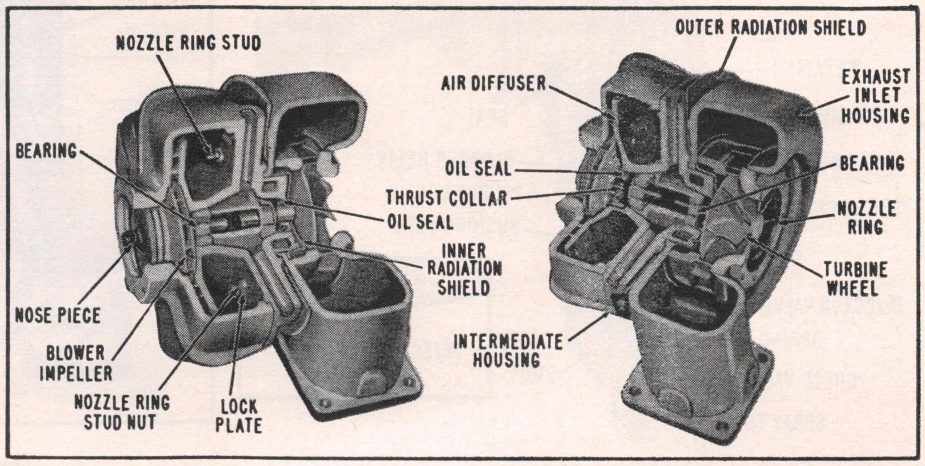

Fig. 15 Cutaway view of a Turbocharger

and size of the turbocharger are stamped on the name plate attached to the blower housing.

Inspection

Performance of the turbocharger should be observed at reasonable intervals for the following conditions:

Engine lubricating oil pressure should be kept at about 30 to 40 psi at the turbocharger speed corresponding to full engine load. The lubricating oil pressure gauge should be observed each time the engine is started or shut down. Particular attention should be paid to keeping the lubricating oil clean by regular changing and renewing of the engine filter elements.

Turbocharger cooling water temperatures should be checked occasionally to make sure that the temperature rise across the turbocharger does not exceed 30 degrees F. A high temperature rise across the unit indicates stoppage or plugging of the coolant passages.

Operation of the unit should be observed frequently to detect any noticeable vibration. If noticeable vibration develops, the unit should be stopped and the cause determined. Vibration might be caused by damage to the impeller, shaft or turbine wheel, or by worn or loose bearings in the unit.

Fuel Injector & Fuel Pump Section

DESCRIPTION

The cross section of the fuel injector, Fig. 1, shows the various fuel injector parts. Fuel oil supplied to the injector enters the body at the top through the filter cap. After passing through the filter element in the inlet passage, the fuel oil fills the supply chamber between the bushing and the spill deflector. The plunger operates up and down in this bushing, the bore of which is connected to the fuel supply by two funnel-shaped ports.

Motion of the injector rocker arm, Figs. 2, 3, is transmitted to the plunger by the follower which bears against the plunger. The follower, follower guide, and plunger are held together as an assembly by a straight pin. The follower assembly is positioned in the body by a follower stop pin.

In addition to up and down motion, the plunger can be rotated around its axis by a gear, which is in mesh with the control rack. An upper and lower helix or cut-off are machined into the lower end of the plunger for metering purposes. Rotation of the plunger, by changing the position of the helix, retards or advances the closing of the ports and beginning and ending of injection period, at the same time increasing or decreasing the desired amount of fuel which remains under the plunger for injection into the cylinder.

Injectors may be one of four different types, each designed for a specific requirement. The correct injector must be used and the type can be determined by checking the injector in service for the number which appears on a color tag pressed into the body.

Injector Mounting

The injectors are mounted in the cylinder head with their spray tips projecting slightly below the top of the inside surface of the combustion chambers, Figs. 2, 3. A clamp, bolted to the cylinder head and fitting into a machined recess in each side of the injector body, holds the injector in place in a water-cooled copper tube which passes through the cylinder head. A dowel pin in the injector body registers with a hole in the cylinder head for the purpose of accurately locating the injector.

The copper tube is installed in the cylinder head with a seal ring at the flanged upper end. The lower end is peened into a recess of the cylinder head. The tapered lower end of the injector seats in the copper tube, forming a tight seal to withstand the high pressure inside the combustion chamber.

Injector Service

Cleanliness is absolutely essential in

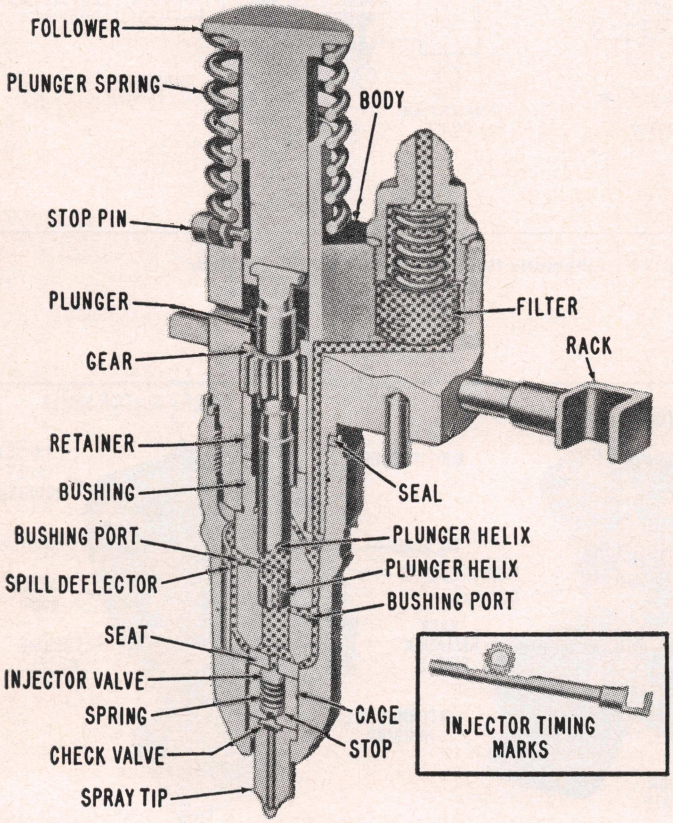

Fig. 1 Fuel injector assembly

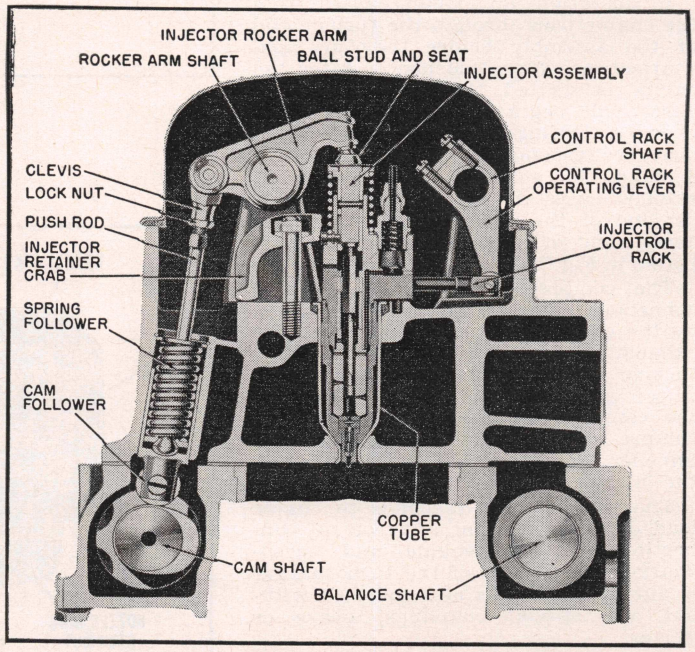

Fig. 2 Fuel injector mounting on Series 71 In-Line engines

servicing injectors because practically all injector service troubles are directly traceable to dirt, grit or other foreign matter. When preparing to assemble an injector, therefore, wash hands thoroughly and clean all parts with clean fuel oil or carbon tetrachloride. Parts should then be blown dry with dry compressed air, making sure to blow through all passages in the injector body as well as drilled holes and slots.

When more than one injector is disassembled, it is necessary to keep the component parts of each one together. The plunger must always be fitted with the same bushing.

After injectors have operated in an engine the filter caps and filters should not be removed when the injector is in the engine. Should it become necessary to remove these parts, the injector must be removed from the engine and completely disassembled and cleaned.

Whenever an injector has been removed and reinstalled, or a new injector installed, the injectors must be timed and the racks positioned as outlined in the *Tune Up* section of this chapter.

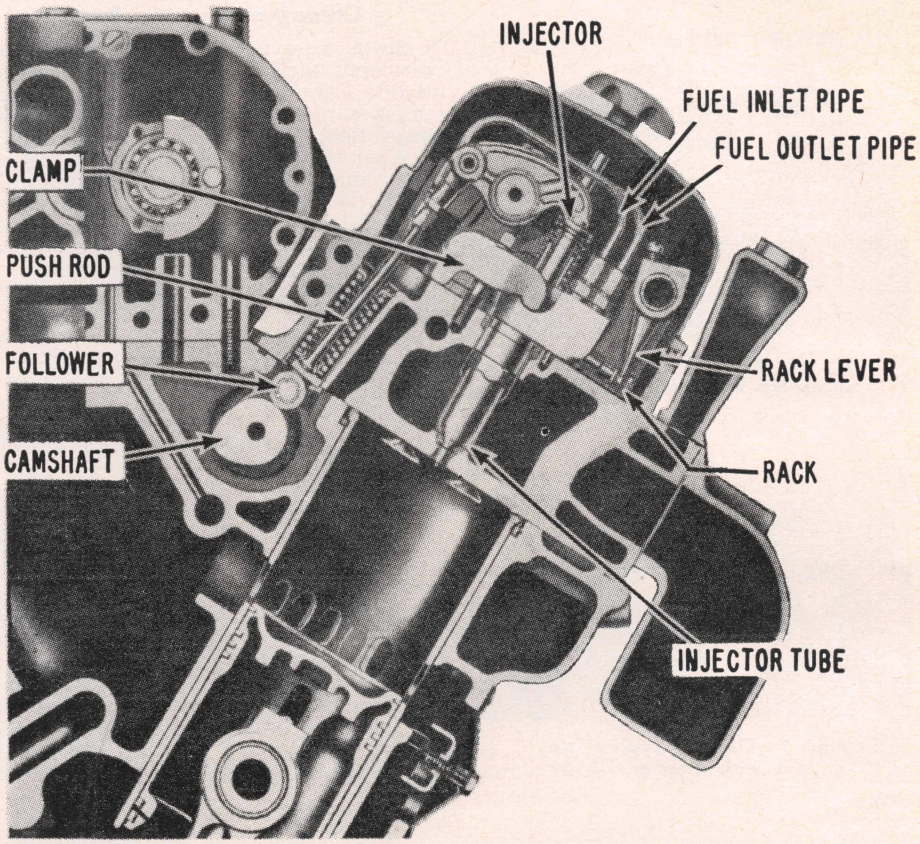

Fig. 3 Fuel injector mounting on V-71 engine

Injector Removal

1. Remove valve rocker cover.
2. Remove fuel pipes from injector and fuel connectors. *To prevent dirt entering injector, cover each fuel fitting with a shipping cap.*
3. Turn engine over with a bar to bring outer ends of push rods of injector and valve rocker arms in line horizontally.
4. Remove two rocker shaft bracket bolts and swing rocker arm assembly away from injector and valves.
5. Remove injector clamp nut, washer and clamp.
6. On V-71 engines, loosen inner and outer adjusting screws on injector rack control lever and slide lever away from injector.
7. On all engines, lift injector from its seat in the cylinder head with tool shown in Fig. 4, and disconnect control rack linkage.

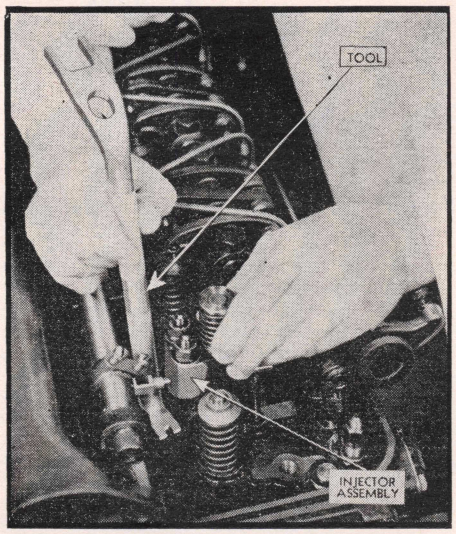

Fig. 4 Removing injector

8. Cover injector hole in cylinder head to keep out dirt.
9. Clean exterior of injector with clean fuel oil and dry with compressed air.

Injector Testing

Before putting an injector into service, a series of tests must be made on special testing equipment made for the purpose. Those who have this equipment are provided with complete instructions for its use. Therefore, there is no need to go into the various procedures for those who do not have the apparatus.

Injector Disassembly

Cleanliness and freedom from dirt at the workbench is absolutely essential. Work must be done in a clean room with clean fuel. Always use paper cleaning tissue to clean and dry parts—do not use rags.

1. Support injector upright in a suitable fixture or a bench vise with special jaws, Fig. 5, and remove filter caps, springs, filter elements and gaskets. *Discard filter elements and gaskets and use new ones on reassembly.*
2. Compress follower spring. Then, using a screwdriver, raise spring above stop pin and withdraw pin. Allow follower spring to rise gradually.
3. Remove follower, spring and plunger as a unit.
4. Reverse injector in fixture and loosen nut from injector body.
5. Lift injector nut straight up by hand, being careful not to dislodge the spray tip and valve parts. Remove spray tip and valve parts off bushing and place in a clean receptacle until ready for reassembly. When an injector has been in use for some time, the spray tip, even though clean on the outside, may not be pushed readily from the nut with the fingers. In this event, support the nut on a wood block and drive the tip down through the nut, using a suitable drift.
6. Remove spill deflector and seal ring from injector nut.
7. Remove plunger bushing, gear retainer and gear from injector body.
8. Withdraw injector control rack from injector body.

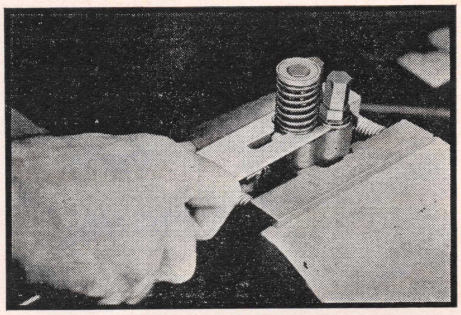

Fig. 5 Injector mounted in special vise jaws. Slotted tool is used to lift plunger spring so stop pin can be withdrawn

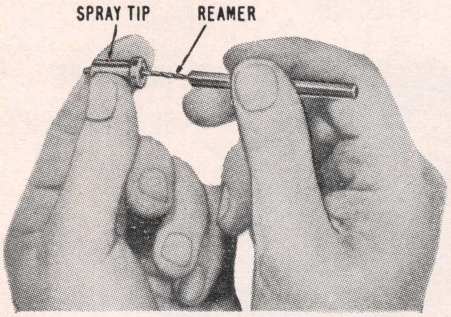

Fig. 6 Reaming fuel injector spray tip with Reamer J-1243

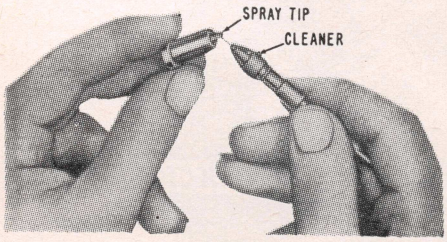

Fig. 7 Cleaning spray tip orifices with Cleaner J-8169

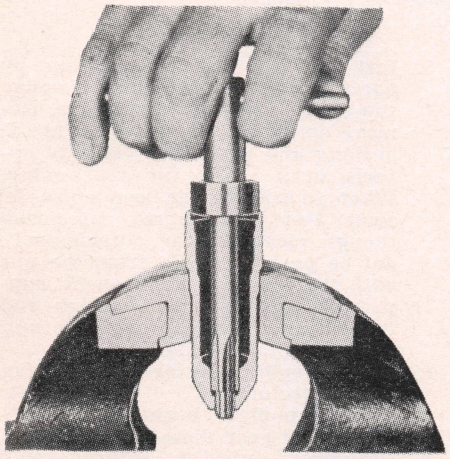

Fig. 8 Cleaning injector nut spray tip seat with Tool J-4986-1

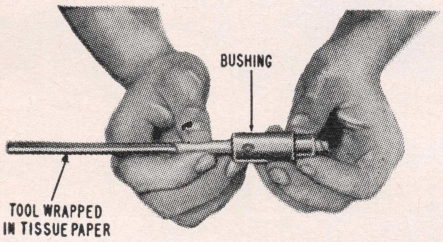

Fig. 9 Cleaning injector plunger bushing with Tool J-1291-01 and tissue paper

Cleaning Injector Parts

Since most injector troubles are the result of dirt particles, it is essential that a clean area be provided on which to place injector parts after cleaning and inspection.

Wash all parts with clean fuel oil or a suitable cleaning solvent and dry with clean, filtered compressed air. Do not use waste or rags for cleaning purposes. Be sure to clean out all passages, drilled holes and slots in all injector parts.

1. Spray tip should be cleaned with Reamer J-1243, Fig. 6. Turn reamer in a clockwise direction to remove carbon deposits. Wash spray tip and dry with compressed air. Clean spray tip orifices, Fig. 7, using a .005″ reamer wire for tips with .005″ or .0055″ diameter holes, or a .006″ diameter wire for tips with .006″ diameter holes.
2. However, before using wire, hone end of wire until it is smooth and free of burrs, and taper end a distance of $\frac{1}{16}$″, using Stone J-8170. Allow wire to extend ⅛″ from Tool J-8169. Wash spray tip in clean fuel oil and dry with compressed air after cleaning orifices.
3. Clean and brush all passages in injector body, using special fuel oil cleaning brush J-8152 and rack hole cleaning brush J-8150. Blow out passages and dry with compressed air.
4. Carefully insert reamer J-4986-1, Fig. 8, in injector nut. Turn reamer in a clockwise direction to remove carbon deposits. Use care in reaming to prevent removing any metal or setting up burrs on spray tip seat. Then, wash in clean fuel oil and dry with compressed air. Carbon deposits on the spray tip seating surface of the injector nut will result in poor sealing and consequent fuel leakage around spray tip.
5. When handling the injector plunger, do not touch finished plunger surfaces with the fingers. Wash plunger and bushing with clean fuel oil and dry with compressed air. Final cleaning may be accomplished with soft tissue paper. Wrap tissue around tool J-1291-01 and clean out bushing bore, Fig. 9. Keep plunger and bushing together as they are mated parts.
6. After washing, submerge parts in a clean receptacle containing clean fuel oil. Keep parts of each injector assembly together.

Assemble Injector

Refer to Figs. 10, 11 and 12 for proper relative position of injector parts. Since the plunger and bushing are matched parts, they must be considered as one piece and, if one is replaced, both must be replaced.

Assemble Filters—New filters and gaskets should always be used when reassembling injectors.

1. Holding injector body right side up, place a filter in each of the fuel cavities in the top of the injector body, Fig. 10. *Note that the filters have a dimple in one end; always have the dimple at the bottom.*

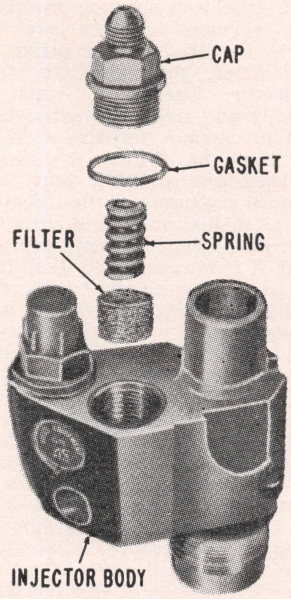

Fig. 10 Fuel injector filters and related parts

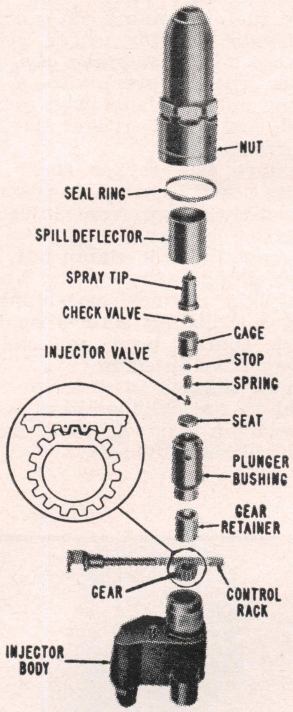

Fig. 11 Fuel injector rack and related parts

2. Place a spring above each filter, a new gasket up against the shoulder of each filter cap, lubricate the threads, and tighten the cap in place to a torque of 65-75 ft lbs, using a $\frac{9}{16}$″ deep socket wrench. *It is important that the filter caps be tightened securely so as to compress the gaskets and effect a good seal with the injector body. Also, when the caps are tightened, they compress the filter springs which hold the filters securely in place so all fuel entering the injector is properly filtered.*

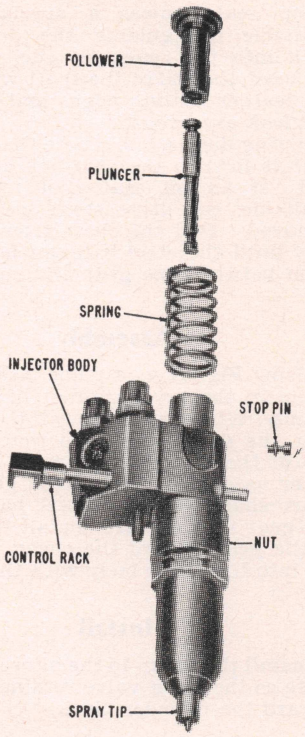

Fig. 12 Fuel injector plunger and related parts

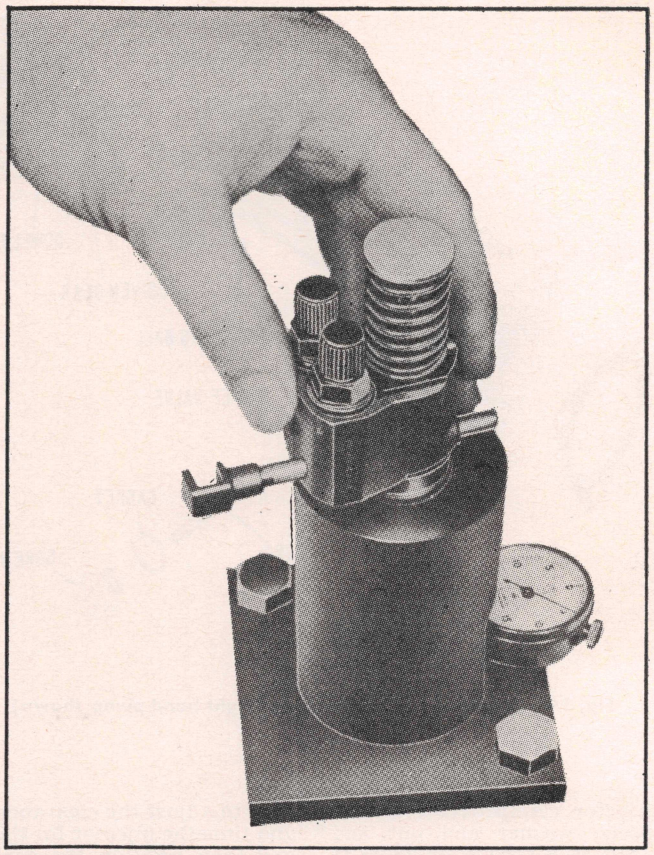

Fig. 13 Checking fuel injector spray tip concentricity with Gauge J-5119

3. Install shipping caps on filter caps to prevent any dirt particles from entering injector. Be sure shipping caps are clean.

Assemble Rack and Gear—Refer to Fig. 11 and note that two of the teeth of the rack have a drill spot mark; also note one tooth of the mating gear is similarly marked. When rack and gear are assembled, the mark tooth of the gear must be engaged between the two marked teeth on the rack.

1. Hold the injector body bottom end up and slide the rack through the proper hole in the body. The two marked teeth can then be observed when looking into the bore for the gear from the bottom of the injector body. *The rack can be placed in the body in only one position and have the tooth marks show in the opening for the gear.*
2. Hold rack in position so the tooth marks show and slide the gear into proper engagement with the rack.
3. Slide gear retainer down on top of gear. Then place plunger bushing down onto retainer with locating pin in bushing guided into slot of body.

Assemble Valve and Related Parts

1. Referring to Fig. 11, support body in holding fixture with bottom end up.
2. Locate seal ring on shoulder of body. Slide spill deflector over barrel of bushing.
3. Place valve seat on end of bushing. Insert stem of valve in one end of its spring and stop in opposite end of spring. Lower cage over this assembly so that the stop seats in cage; then position cage assembly on valve seat.
4. Locate check valve centrally on cage and place spray tip over check valve and against cage.
5. Lubricate threads and carefully pilot nut over spray tip and check valve. The tip will slide through hole in small end of nut.
6. Screw nut in place by hand, making sure valve assembly does not shift. *Do not use wrench to tighten nut at this time. If valve parts are not centrally located, they will not enter counterbore of nut. To facilitate assembly in such cases, turn end of spray tip with fingers while screwing nut into body by hand.*

Assemble Plunger and Follower

1. Referring to Fig. 12, slide head of plunger into follower. Insert this assembly through plunger spring for assembly to injector.
2. Invert injector in the holding fixture, connector side up, and push rack all the way in. Then insert free end of plunger into top of injector body.
3. Start the stop pin into position into the body so that bottom coil of follower spring rests on narrow flange on stop pin. Then with slot in follower and hole in injector body in alignment for the stop pin and flat side of plunger positioned to engage flat side of gear, press down on top of follower and at the same time press follower stop pin into position with the thumb. The stop pin will slip into position as soon as the slot in follower and hole in body are in alignment. When in place, spring will hold stop pin in position.
4. Invert injector in holding fixture and by means of a socket wrench and torque wrench, tighten injector nut to a torque of 55-65 ft lbs. *Do not exceed specified torque as to do so will cause the plunger to bind in the bushing.*

Check Spray Tip Concentricity—The spray tip and injector nut must be concentric within .008″ to ensure correct alignment of the spray tip in the spray tip hole in the cylinder head (or injector hole tube). A special dial gauge, Fig. 13, is available to make this check.

1. Place injector in concentricity gauge, Fig. 13.
2. Adjust dial indicator to "O". Rotate injector 360 degrees and note total run-out as indicated on dial.
3. If total run-out exceeds .008″, remove injector from gauge. Loosen injector nut, re-center spray tip, tighten nut and recheck concentricity. If, after several attempts, the spray tip cannot be positioned satisfactorily, the assembly of the complete injector must be checked.

Install Injector

1. Insert injector into injector tube with locating dowel registering with locating hole in cylinder head and with pin on injector control tube lever registering with control rack lever.

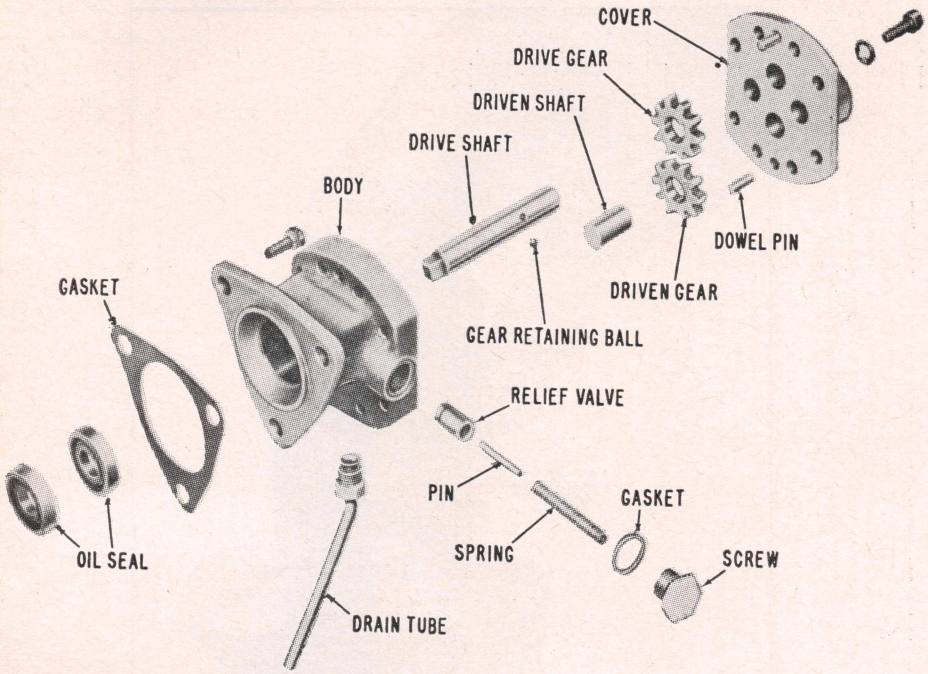

Fig. 14 Layout of fuel pump parts (right hand pump shown)

2. Place injector clamp over stud. Install special washer and nut and tighten nut to a torque of 20-25 ft lbs. Check to make sure clamp does not interfere with valve or injector springs. *Check injector rack for free movement. Excess torque will cause injector control rack to stick or bind.*
3. Move rocker arm assembly into position and secure bracket bolts to a torque of 90-100 ft lbs (50-55 on V-71's).
4. Remove shipping caps and connect fuel pipes to injector and fuel connectors.

As a precautionary measure against any possibility of scoring injector parts upon initial installation due to lack of lubrication, any entrapped air should be bled from the injector before tightening the connections on the fuel outlet side of the injector. This may be accomplished by cranking the engine briefly with the injector rack in the "no fuel" position and then tightening the fuel pipe connection. When installing injector fuel lines, connections should be tightened only enough (12-15 ft lbs) to prevent leakage of fuel. Excess tightening may result in the flared end of the fuel line being twisted or fractured. When all injector fuel lines are installed, the engine should be run long enough (during tune-up procedure) to check for leaks. Should leaks occur, the connections should be tightened only enough to stop the leak.

Following installation of the injectors, a complete engine tune-up should be performed as outlined in the *Tune-Up* Section of this chapter. However, if only one injector has been replaced, and other injectors and governor adjustments have not been disturbed, it will only be necessary to adjust the clearance of the valves and time the injector for the one cylinder, and then position the control racks as outlined in the *Governor* section of this chapter.

FUEL OIL PUMP

The fuel pump, Fig. 14, is of the positive displacement, gear type. The pump is attached to the blower and is driven off the rear end of the blower lower rotor. The pump gears have a press fit on the driven and drive shafts.

A spring-loaded relief valve incorporated in the pump body normally remains in the closed position, operating only when pressure on the outlet side (to fuel filter) becomes excessive due to a plugged filter or fuel line. The valve will open at a pressure of approximately 65 to 70 psi, allowing fuel to return through a passage in the body from the pressure side to the suction side of the pump.

Removal

If the pump fails to rotate when the blower is running, the cause may be due to a broken drive fork on the end of the pump shaft.

To remove the pump, disconnect the intake and discharge lines from the pump. Unfasten the pump from the rear blower end plate and withdraw it straight out. After the pump has been removed, rotate the shaft by hand to see if the parts rotate freely. If the pump is binding or sticking, it should be replaced with a new pump.

Disassembly

When disassembling the pump the drive shaft must not be pulled from the pump seals unless a special tool is available for guiding the drive shaft back into the seals. If such a tool is not used, the end of the shaft will destroy the leather sealing edges and the pump will leak excessively.

During disassembly, note that the idler gear is held to the shaft by a ⅛" steel ball. If an oil seal pilot tool is not available, the drive shaft must not be removed. Pull the shaft from the body only until the steel ball can be removed from between the gear and shaft.

Assembly

Using Fig. 14 as a guide, assemble the pump in the reverse order of its disassembly. When positioning the drive gear over the drive shaft, see that the open end of the ball slot is toward the cover. After assembling the driven gear to the short shaft with the steel ball locking the gear to the shaft, install the assemin the gear toward the cover.
bly into the pump body with the ball slot

Install

Install the pump to the blower rear end plate so the relief valve retainer screw is toward the cylinder block.

FUEL MANIFOLDS

Series 53, 6V-53, V-71

The fuel manifolds in these engines are an integral part of the cylinder heads.

In Line 71 Engines

Fuel injectors are supplied with fuel oil through the lower of the two fuel manifolds located on the side of the cylinder head and connected to the injectors by short steel lines. The upper manifold returns excess fuel from the injectors through tubing to the fuel tank. Both manifolds are locked in position at the side of the cylinder head by fuel connectors which set into tapered seats in the manifold fittings. When a connector is removed, use care to see that the tapered seats are perfectly clean and properly positioned in the manifold fittings.

When reinstalling manifolds, centralize the T connectors with the fuel connectors by alternately turning the connectors and moving manifold. This is important in order to insure leak-proof joints. Tighten fuel connectors equally and secure lock nuts against new copper washers. The lock nuts contain a fibre insert which seals the threads against leakage. Install the nut with the fibre insert *down* against copper washer and tighten to 30-35 lbs. ft. torque.

Before replacing the valve cover, run the engine and see that all fuel line connections are tight so that no fuel oil leaks into the cylinder head to dilute the lubricating oil. If lubricating oil is diluted with fuel oil, engine bearings will be seriously damaged. Any leakage between tapered seats and fuel connectors would be observed at the holes on the outside of the cylinder head.

Engine Repair Section

CYLINDER HEAD

Remove & Install

Due to the various optional and accessory equipment used on the different engine models, only the general steps for removing and installing the head are covered. If the engine is equipped with special accessories other than those mentioned below, carefully disconnect or remove those affecting cylinder head removal, making sure to note their position to assure correct installation.

Series 53, 6V-53, V-71

1. Disconnect exhaust piping at exhaust manifold.
2. Drain cooling system.
3. Disconnect fuel lines at cylinder head.
4. On Series 53 and 6V-53, loosen clamp and slide hose back on thermostat housing. Remove thermostat and its housing.
5. Remove rocker arm cover (also governor cover on V-71).
6. Disconnect and remove fuel rod between governor and injector control tube lever.
7. On Series 53 and 6V-53, remove fuel rod cover (if used). On V-71, loosen fuel rod cover hose clamp and slide hose up on fuel rod cover toward governor.
8. Remove exhaust manifold.
9. Remove injector control tube and brackets as a unit. If the head is to be stripped for valve or other service operations, the fuel lines and injectors should be removed at this time.
10. Remove head stud nuts and bolts. Then use a suitable sling to lift head off block. *On V-71, if interference is encountered between rear end of right cylinder bank and any of the flywheel housing attaching bolts, loosen the bolts to facilitate removal of the head. Caution: When resting head on work bench, protect cam follower rollers and injector spray tips by resting valve side of head on wooden blocks.*
11. Remove cylinder head compression gaskets, oil seals and water seals, Fig. 1.

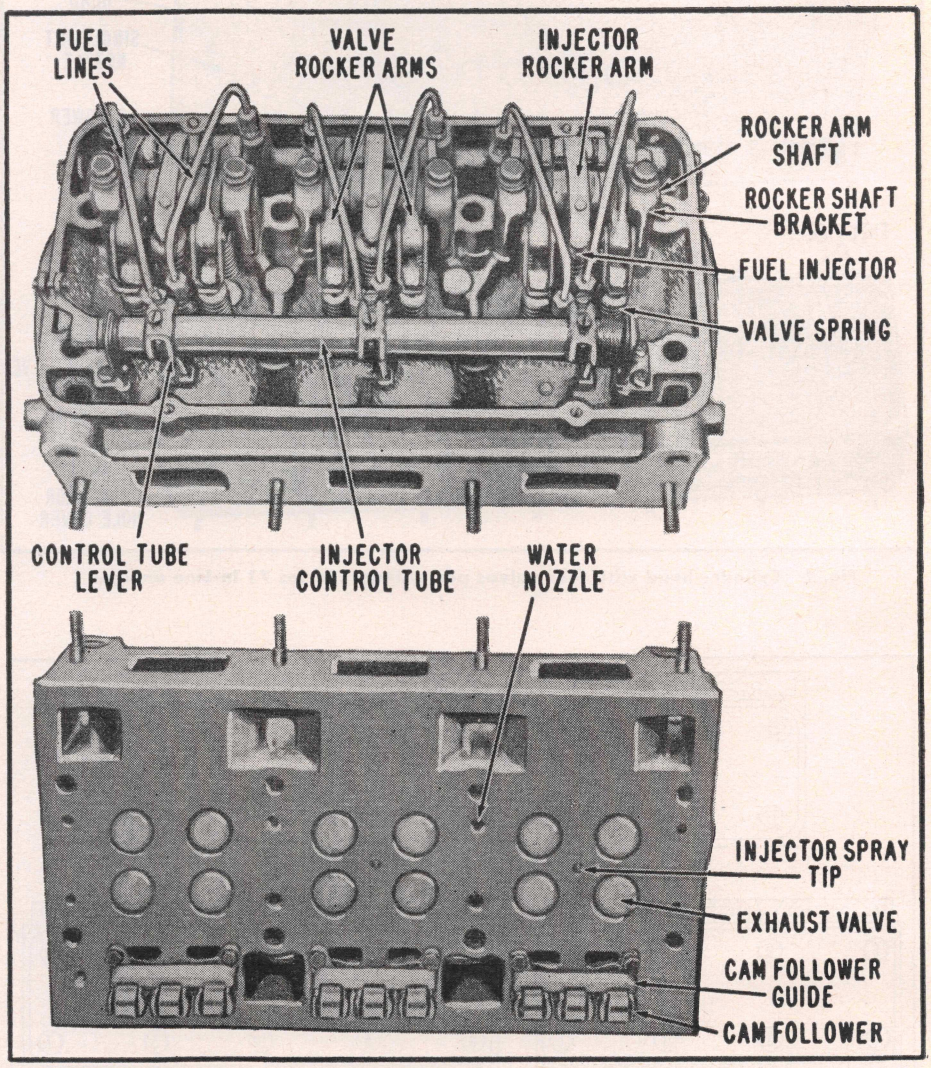

Fig. 1 Cylinder head with four exhaust valves per cylinder. Series 53, 6V-53, V-71

Installation

1. Install new compression gaskets, oil seals and water seals.
2. To install cylinder head on In-Line 53 engines without disturbing gaskets and seals, special guide studs (J-7866) must be used. They should also be used to facilitate cylinder head installation on 6V-53 engines. Install the guide studs diagonally opposite in end cylinder block bolt holes.
3. A final visual check of all cylinder head gaskets and seals should be made to ensure that they are in place just before cylinder head is lowered onto cylinder block. *This is a very important check as compression gaskets or seals which are jarred out of their proper position will lead to leaks and "blow-by" with resultant poor engine performance and damage to engine.*
4. The cylinder head must be gradually and uniformly drawn down against the gaskets and seals to ensure a good seal between head and block.
5. On In-Line 53 engines equipped with both 6 and 12 point head bolts, *the 12 point bolts must be installed on the camshaft side of the head to eliminate possible interference between governor control link and head bolt.*
6. Install head bolts and stud nuts. Then, beginning on the camshaft side of head, take up tension in cam follower springs by tightening bolts and nuts lightly.
7. Finally, tighten bolts and nuts to the specified torque about ½ turn at a time in the sequence shown in Fig. 3. Under no circumstances should the torque exceed the specified limits, otherwise the studs and bolts may become stretched beyond their elastic limit.
8. Install fuel injectors.
9. Set injector control tube assembly in place on cylinder head and tighten hold-down bolts finger tight. When positioning injector control tube, be sure that ball end of injector control rack levers engage slots in control racks. With one end of control tube return spring hooked around control tube bracket, tighten bracket bolts to 10-12 ft-lb torque.
   jector racks out (no fuel position) after they have been moved all the
10. After tightening bolts, revolve tube and see if return spring pulls injector racks out (no fuel position) after they have been moved all the way in to the full fuel position. Since the injector control tube is mounted in self-aligning bearings,

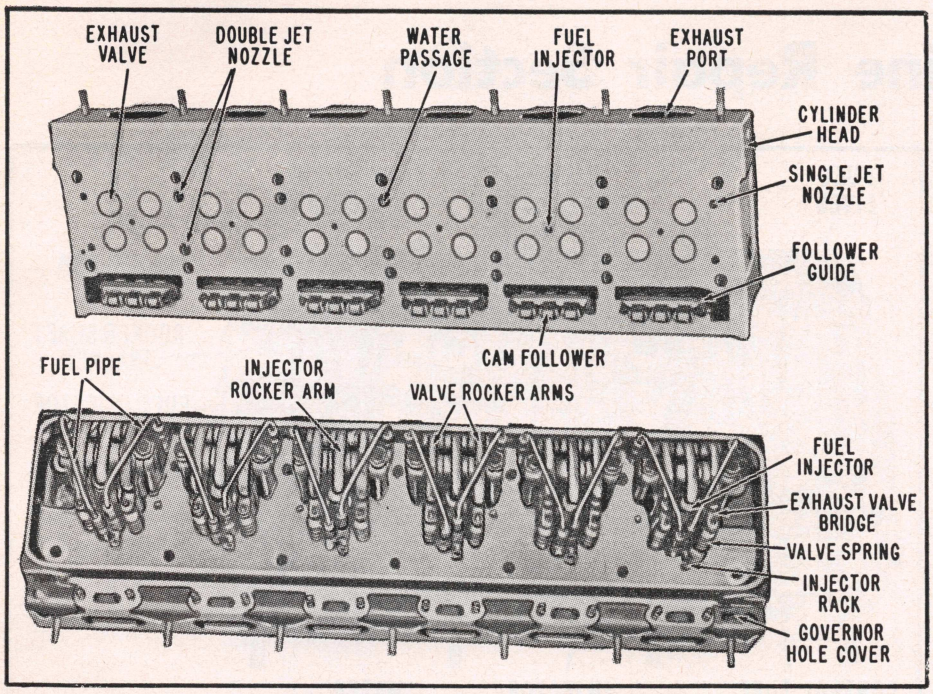

Fig. 2 Cylinder head with four valves per cylinder. Series 71 In-Line engines

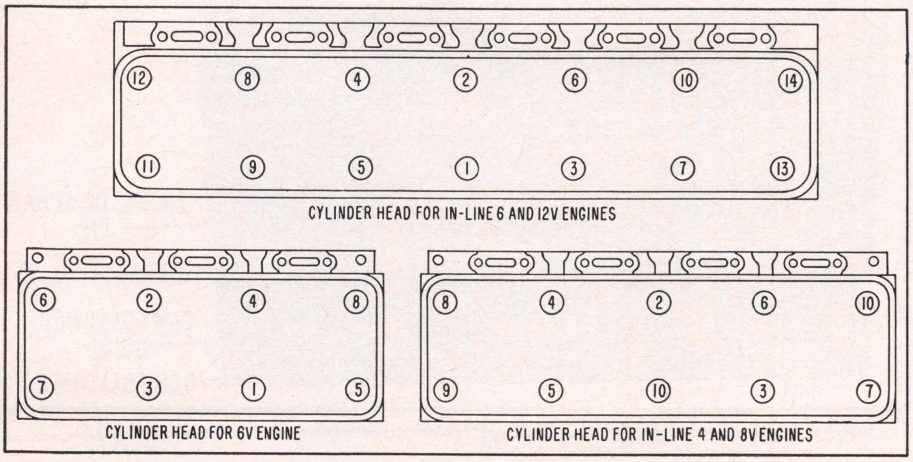

Fig. 3 Cylinder head tightening sequence

tapping the tube lightly with a soft hammer will remove any bind that exists. *The injector racks must return to the no fuel position freely by aid of the return spring only. Do not bend the return spring to bring about this condition.*

11. Install fuel rod, exhaust manifold, thermostat, water hose and fuel lines. Fill cooling system and check for leaks.
12. With throttle in off position, hand crank engine to be sure all parts function freely.
13. After starting engine, see that all fuel line connections are tight. After engine has reached operating temperature, check cylinder head bolt and nut torque and recheck valve lash. Tune up engine as outlined in the *Tune Up Section* of this chapter.

Series 71 In-Line Engines

1. Disconnect exhaust piping at exhaust manifold. On turbocharged units, remove connections from exhaust manifold to turbocharger. Remove turbocharger if necessary.
2. Remove air cleaners.
3. Drain cooling system. Be sure to remove vent plug in thermostat housing when draining system.
4. Remove rocker arm cover.
5. Remove thermostat and its housing.
6. Remove temperature gauge unit from adaptor at rear of water outlet manifold.
7. Disconnect air inlet pipe from elbows at cylinder head and cylinder block hand hole cover.
8. Remove fuel filter if attached to cylinder head.
9. Disconnect governor fuel rod from injector control tube lever.
10. Remove governor cover.
11. Remove control link from differential lever on mechanical governor.
12. Unfasten and lift injector control tube away from cylinder head.
13. Remove fuel lines from injectors and fuel connectors, Fig. 2. *Cover each injector opening with a shipping cap or other suitable plug to prevent dirt from entering injectors.*
14. Loosen rocker arm bracket bolts to facilitate their removal after head is removed.
15. Remove two bolts securing lifter bracket to balance weight cover; also the two bolts securing rear lifter bracket to flywheel housing. At the same time, loosen the two bolts directly below each lifter bracket which attach the balance weight cover and flywheel housing to the front and rear end plates. *If these bolts are not loosened, their threaded ends may bear against ends of cylinder head and thus interfere withs its removal.*
16. Remove cylinder head stud nuts.
17. With lifting hooks inserted in lifter brackets, raise cylinder head uniformly from block.
18. Remove compression gaskets and oil and water seals, Fig. 2.
19. Do not set head with bottom face down on work bench as the cam followers project below bottom of head. Injector spray tips also project if injectors have not been removed. Set head on its side.

Installation

1. Place new cylinder liner compression gasket on each cylinder liner.
2. Place new seal rings in counterbores of water and oil holes in cylinder block, Fig. 2.
3. Install new oil seal in groove around perimeter of cylinder block. Do not stretch.
4. Lower head in place over studs. *A final visual check of all gaskets and seals should be made to be sure they are in place just before head is lowered in place. This is a very important check as compression gaskets and oil seals which are jarred out of position will lead to leaks and "blow-by" with resultant poor engine performance and damage to engine.*
5. After setting head in place, loosen lifter bracket attaching bolts before installing head stud nuts. If this is not done, cylinder head may be prevented from seating properly against its gaskets and cylinder block. A similar condition could exist when installing a head on an engine with the exhaust manifold attached to the head. Clearance must be assured between exhaust manifold and bosses on cylinder block. On some models, these bosses serve as a rest for the exhaust manifold *after* the head has been attached to the block.
6. The head must be gradually drawn down against the head gaskets and seals to assure a good seal between all engine systems.
7. Use hypoid grease on threads of studs and that portion of head that nuts contact.

8. Beginning on camshaft side, first take up tension of cam follower springs and draw nuts down finger tight. Then tighten with a socket wrench. Finally, draw nuts down to the proper torque ½ turn at a time to ensure uniform compression of gaskets. Each of the above three steps should follow the sequence shown in Fig. 3. Torque should not exceed the specified limits, otherwise the studs may become stretched beyond their elastic limits.
9. Tighten the two flywheel housing attaching bolts directly below rear lifter bracket.
10. Using a new gasket, secure rear lifter bracket to head and flywheel housing. Tighten bolts to 55-50 ft-lb (cast iron engine) or 35-40 ft-lb (aluminum engine). Install front lifter bracket in same manner and to the same torque.
11. Connect fuel pipes.
12. Install governor.
13. Install injector control tube assembly as directed for Series 53 engines.
14. Install remaining items in reverse order of removal. Then, with throttle in off position, crank engine to see that all parts function freely.
15. Tune up engine as outlined in the *Tune Up Section* of this chapter.
16. Start engine and check fuel line connections for leaks. After engine has reached operating temperature, recheck cylinder head torque and valve lash. Examine all fuel oil and lubricating oil connections for leaks.

VALVE & INJECTOR OPERATING MECHANISM

Service Note

Several operations may be performed on the valve mechanism, Fig. 4, without removing the cylinder head from the block. The operations not requiring cylinder head removal are:

1. Adjust valve clearance.
2. Remove and install valve spring.
3. Remove and install a rocker arm.
4. Remove and install a rocker arm shaft or bracket.
5. Remove and install an injector.

It is also possible to remove or replace a push rod, push rod spring, spring seats or cam follower without removing the head. These parts, however, are more easily changed from the lower side of the cylinder head when the head is off the engine.

To remove and install valves, valve guides, valve seat inserts and to recondition valves and seats, the head must be removed.

ROCKER ARMS

1. Remove valve rocker cover.
2. Remove fuel lines from injectors and fuel connectors.
3. Turn engine over in direction of normal rotation to bring push rod outer ends in line horizontally.
4. Remove rocker arm shaft brackets and shaft.
5. Loosen lock nut at upper end of push rod and unscrew rocker arm from push rod.

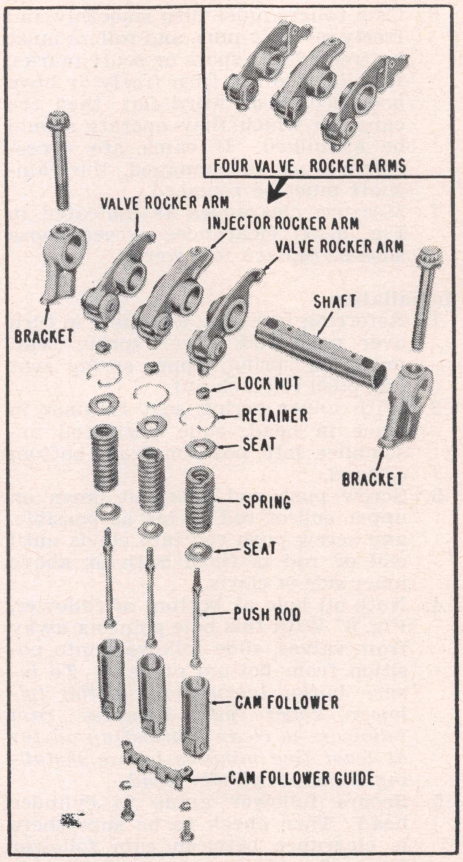

Fig. 4 Valve and injector operating mechanism

Inspection

1. Wash all parts in clean fuel oil and air dry. Make certain that oil passages in rocker arms, shaft and bracket bolts are open and clean.
2. Inspect all parts for excessive wear. The maximum clearance between rocker arm shaft and injector rocker arm bushing or an exhaust valve rocker arm (which has no bushing) is .004" with used parts.
3. Examine each rocker arm contact face for wear or galling. Also inspect contact surfaces of exhaust valve on four valve cylinder heads.

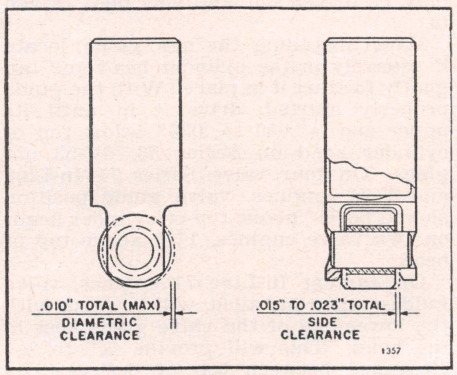

Fig. 5 Cam roller wear and clearance diagram

Installation

1. Install cylinder head, if removed.
2. Apply clean oil to outer surface of rocker arm shaft.
3. Install rocker arms and shaft by reversing the sequence of operation for removal. Tighten bracket bolts to 50-55 ft-lb. *Caution: On four valve engines, there is a possibility of damaging valves if the valve bridges are not resting on the ends of the valves when tightening the shaft bracket bolts. Therefore, note the position of the bridges before, during and after tightening bracket bolts.*
4. Connect fuel lines to injectors and fuel connectors.
5. Adjust valve lash and time fuel ininjectors as outlined in the *Tune Up Section.*
6. While engine is running in preparation for final tune-up, inspect fuel lines for leaks.
7. After engine reaches operating temperature, perform final engine tune-up.

CAM FOLLOWERS

When any appreciable change in injector timing or exhaust valve clearance occurs during engine operation, cam followers and their related parts, Fig. 4, should be inspected for excessive wear. This change in injector timing and valve clearance during engine operation can usually be detected by excessive noise at idling speed.

Cam followers may be removed from either the top or bottom of the cylinder head. Of course, when followers are removed from the bottom, removal of the head will be necessary. When they are removed from the top, a special tool (J-3092-01) is required to extract push rod and cam follower from its bore after removing the push rod spring seat retainer. Herewith is the procedure for removal with head off.

1. Rest cylinder head on its side and remove cam follower guide, Fig. 4.
2. Pull cam followers from head.
3. Remove fuel lines from injectors and connectors.
4. Loosen lock nuts at upper end of push rods and unscrew push rods from rocker arm clevises.
5. Pull push rod and spring assemblies from bottom of head.
6. Remove push rod lock nut, upper and lower spring seats from each push rod for cleaning and inspection. *The upper push rod spring retainers remain in head. If head is to be changed these retainers must be removed; if not they may be left in place.*

Inspection

1. Clean all parts thoroughly with fuel oil and dry with compressed air.
2. Inspect rounded ends of push rods for wear. Also check push rods for straightness; replace any rod that is bent.
3. Check push rod spring tension to determine if it is able to maintain the proper load on the cam follower. Any spring that does not conform to the specifications listed in the *Valve Specifications* chart should be discarded.

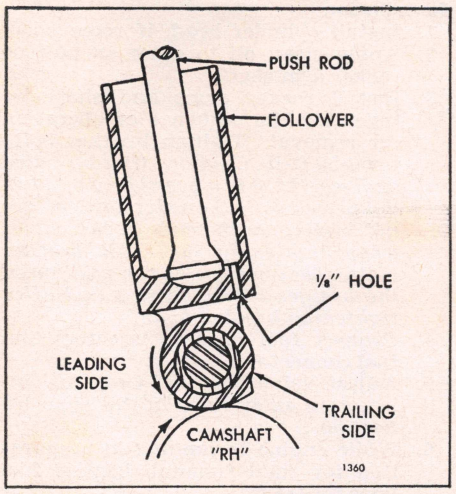

Fig. 6 Installation of cam follower

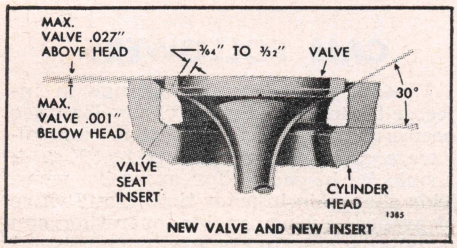

Fig. 7 Installation of valve and seat insert for V-71 engines

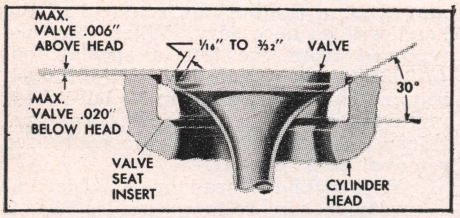

Fig. 8 Installation of valve and seat insert for In Line 71 four valve engines

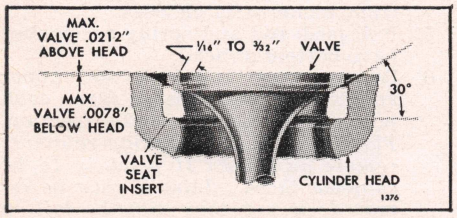

Fig. 9 Installation of valve and seat insert for In-Line 71 two valve engines

4. Cam follower holes in the cylinder head should be examined to make sure they are clean, smooth and free of score marks so as to permit proper functioning of cam followers. Any existing score marks should be cleaned up.
5. Clearance between cam follower and cylinder head bore should be .001-.003". If clearance exceeds .006", install new cam followers.
6. Cam rollers must turn smoothly and freely on their pins, and rollers must be free of flat spots or scuff marks. If rollers do not turn freely or have been scored or worn flat, then the cams on which they operate should be examined. If cams are excessively worn or damaged, the camshaft must be replaced.
7. Measure clearances as indicated in Fig. 5. If clearances exceed those shown, replace followers.

Installation

1. Referring to Fig. 4, assemble in turn over push rod, lower spring seat, push rod spring, upper spring seat and push rod lock nut.
2. With upper spring seat retainer in place in head, slide push rod assemblies into position from bottom of head.
3. Screw push rod lock nut down on upper end of rod as far as possible, and screw push rod into clevis until end of rod is flush with or above inner side of clevis.
4. Note oil hole at bottom of follower, Fig. 6. With this hole pointing away from valves, slide followers into position from bottom of head. *To insure initial lubrication of the follower roller pin, immerse cam followers in clean lubricating oil for at least five minutes before installing them in cylinder head.*
5. Secure follower guide to cylinder head. Then check to be sure there is clearance between cam follower legs and guide.

EXHAUST VALVES & SEATS

See Figs. 7 to 11 for valve and valve seat installation requirements. As shown in the illustrations, a new valve must not protrude more than the specifications shown beyond the surface of the cylinder head. After several valve reconditioning operations, the valve seat insert diameter will be increased so that the valve will recede into the head.

VALVE GUIDES

If the clearance between valve stem and guide exceeds the limits given in the *Valve Specifications* chart, the old guides may be driven out and new ones driven in.

When installing the new guide, locate it squarely in the cylinder head and tap gently to start it in place. With the guide properly started, drive it in until its upper end is .010 to .030" *below* top of cylinder head on Series 53, 6V-53 engines. On four valve Series 71 In-Line and V-71 engines, valve guide position should be 7/8" *above* top of cylinder head; on two valve engines, $1\frac{19}{32}$" above top of head.

On current In-Line 71 engines, valve guides, when installed, will be flush with the lower end of the valve guide boss in the head. This will provide $\frac{1}{32}$" to 1/8" clearance between top of deflector on rotating-type valve and the bottom of valve guide.

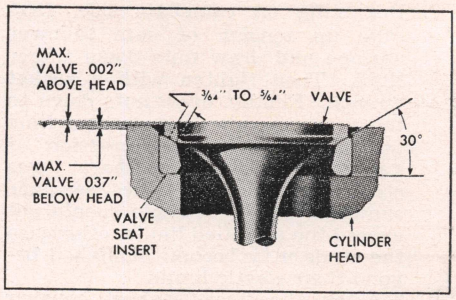

Fig. 10 Installation of valve and seat insert for Series 53 In-Line two valve engines

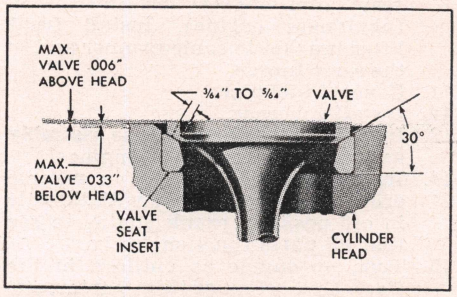

Fig. 11 Installation of valve and seat insert on 6V-53 four valve engines

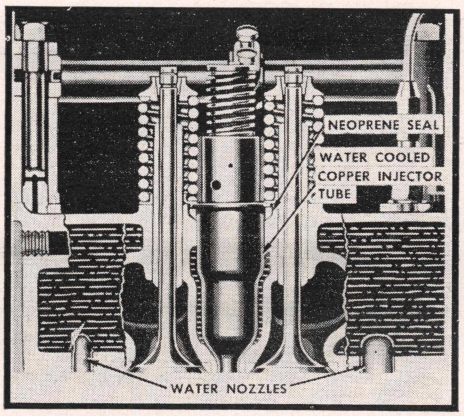

Fig. 12 Water cooling at valves and injector in cylinder head

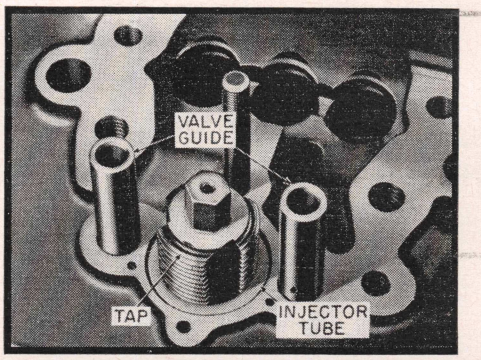

Fig. 13 Special tap screwed into injector copper tube preparatory to removal of tube

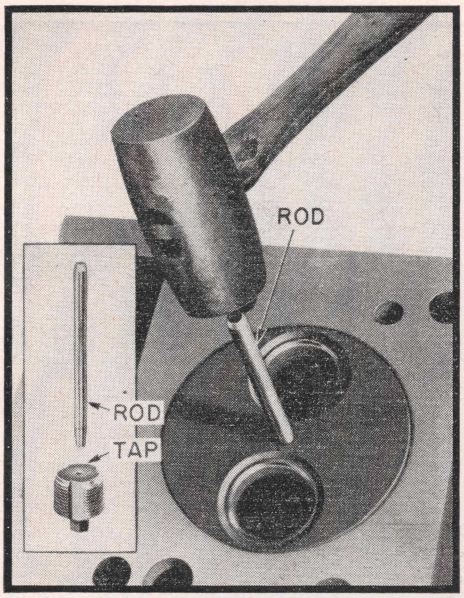

Fig. 14 Driving injector copper tube out of cylinder head

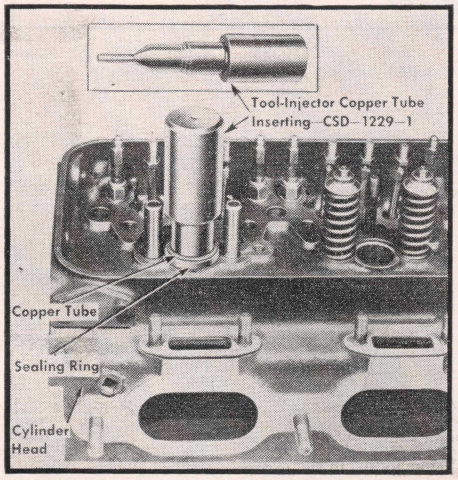

Fig. 15 First phase of injector copper tube installation

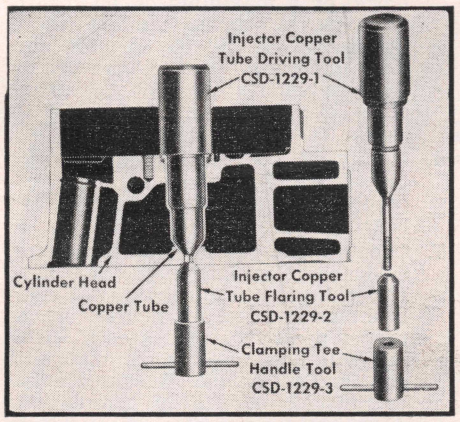

Fig. 16 Second phase of injector copper tube installation

Service replacement guides are finish reamed during manufacture and, therefore, do not require reaming after installation.

INJECTOR TUBES

The bore in the cylinder head for the fuel injector is directly through the cylinder head water jacket as shown in Fig. 12. To prevent cooling water from contacting the injector and still maintain maximum cooling of the injector, a tube is pressed into the injector bore. This tube is sealed at the top with a neoprene ring and upset with a flare on the lower side of the cylinder head to create watertight joints at the top and bottom.

Early design four-valve cylinder heads did not incorporate an injector tube. The injector seated directly into a machined opening in the cylinder head.

Removal

Support the cylinder head with the top side up and screw the special tap shown in Fig. 13 into the copper injector tube. Invert the cylinder head and insert the driving rod, Fig. 14, through the spray tip opening of the tube until it rests against the tap. Then drive the copper tube and tap out of the cylinder head.

Installation

Installation of the copper tube requires careful inspection to make sure that the area of the cylinder head is clean so that when the tube contacts the metal of the cylinder head, foreign material will not prevent it from seating at the bottom and top ends.

To install the tube, first position the seal ring in the counterbore. Then work the injector tube through the seal ring and into the bore of head. Insert the driving tool, Fig. 15, in the tube and drive the tube into the position. When the tube is properly located, the flange at the upper end will seat on the seal ring and into the bore of the head.

After driving the tube into position, swage the lower end at the spray tip with the equipment shown in Fig. 16.

Support the edge of the cylinder head and install the driving tool inside the copper tube. Then install the flaring tool and T-handle over the lower end of the driving tool and upset the copper tube into the counterbore at the lower side of the cylinder head.

Reaming Copper Tube

After the copper tube has been installed in the cylinder head, it must be reamed to receive the injector body nut and spray tip and for good seating of the bevel on the lower end of the injector nut.

Reaming of the upper end of the tube to the proper size for the body nut and lower end of spray tip is accomplished by the tools shown in Fig. 17.

Reaming Bevel Seat

In order to withstand the high compression pressure, the beveled seat at the lower end of the injector nut must fit true in the copper tube. This is accomplished by reaming, Fig. 18. After the reaming operation, daub a thin film of Prussian Blue on the lower flared end of the injector nut and insert the injector down into the tube and lock in position temporarily with injector crab. Then remove the injector and see if it has a good bearing at the beveled seat. If the bearing is poor at this point, the chances are that the tube has been improperly installed, in which case install another tube and again proceed with the reaming operation.

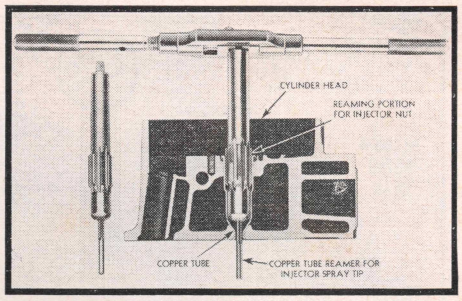

Fig. 17 Reaming injector copper tube

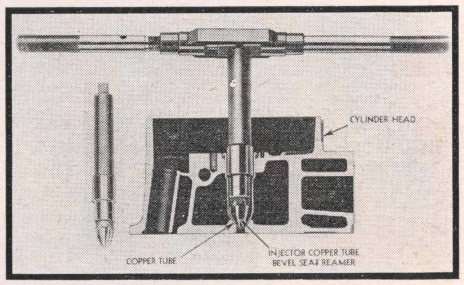

Fig. 18 Reaming injector copper tube beveled seat for spray tip

TIMING GEARS

Figs. 19 to 22 illustrate the gear train and timing marks for the various engines. The correct relationship between crankshaft and camshaft must be maintained to control fuel injection properly and the opening and closing of the exhaust valves.

The crankshaft timing gear can be mounted in only one position due to its being keyed to the crankshaft. The camshaft gear can also be mounted in only one position as a result of the location of the keyway relative to the cams. Therefore, when the engine is properly timed, the markings on the various gears will match as shown in the illustrations.

CAMSHAFT

Figs. 23, 24 and 25 illustrate disassembled views of the camshaft and balance shaft and related parts. In servicing camshaft, gears and related parts, clean all parts with fuel oil and dry with compressed air. Be sure that oil holes in camshaft end bearings are clean and open. Inspect components as follows:

1. Inspect cams and journals and if they are badly scored or worn, replace the camshaft. If cams are scored, the cam followers should also be inspected.

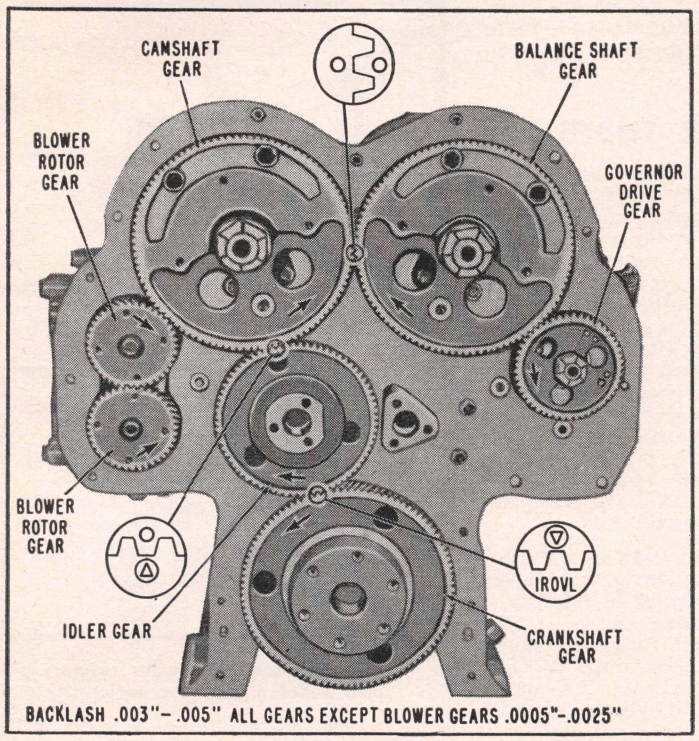

Fig. 19 Gear train and timing marks. Series 53 In-Line engines

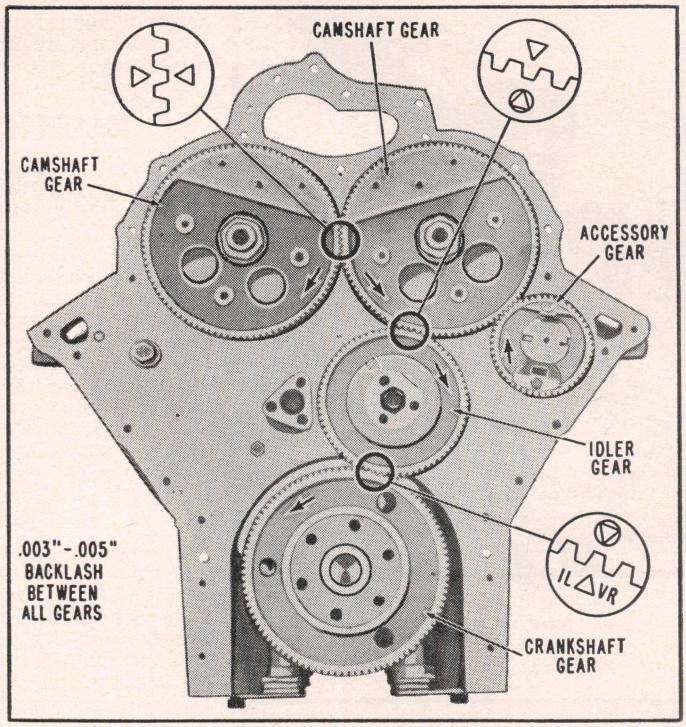

Fig. 20 Gear train and timing marks. 6V-53 engines

2. Examine both faces of camshaft rear end bearing and thrust washers. If either face is scored or if thrust washers are worn excessively, replace the washers. Also, examine surfaces of gear and camshaft which the thrust washers contact; if these surfaces are scratched but not severely scored, they may be smoothed down with an oil stone. However, if score marks are too deep to be removed or parts are badly worn, new parts must be used.
3. Clearance between thrust washer and thrust shoulder of camshaft or balance shaft, using new parts, is from .004″ to .012″, or a maximum of .018″ with new parts. Thrust washers are available in .005″ and .010″ oversize and may be used to reduce excessive clearance to within .004" to .012".
4. The clearance between new camshaft end journals and their respective new bearings is from .0025″ to .004″, or a maximum of .006″ with worn parts. End bearings are available in .010″ or .020″ undersize for use with shafts which have worn or been reground and the clearances exceed the specified .0025″ to .004″ limits.
5. The clearance between camshaft journals and the intermediate bearings is from .0025″ to .005″ with new parts, or a maximum of .009″ with worn parts. Camshaft intermediate bearings are available in .010″ and .020″ undersize for use with worn or reground shafts in which the clearances exceed the limits of .0025″ to .005″.
6. If any of the bearings are scored or worn so that the clearances exceed the specified limits, install new bearings.
7. Check bushings in end bearings for evidence of turning in the bearings. If bushings have turned, install new bushings and test for a press fit. A proper press fit is indicated if bushing will not move when a 2000-lb end load is applied. Bushings must be finished bored after installation. Also, inside diameter of bushings must be square with rear face of bearing within .0015″ total indicator reading. Camshaft rear end bear-

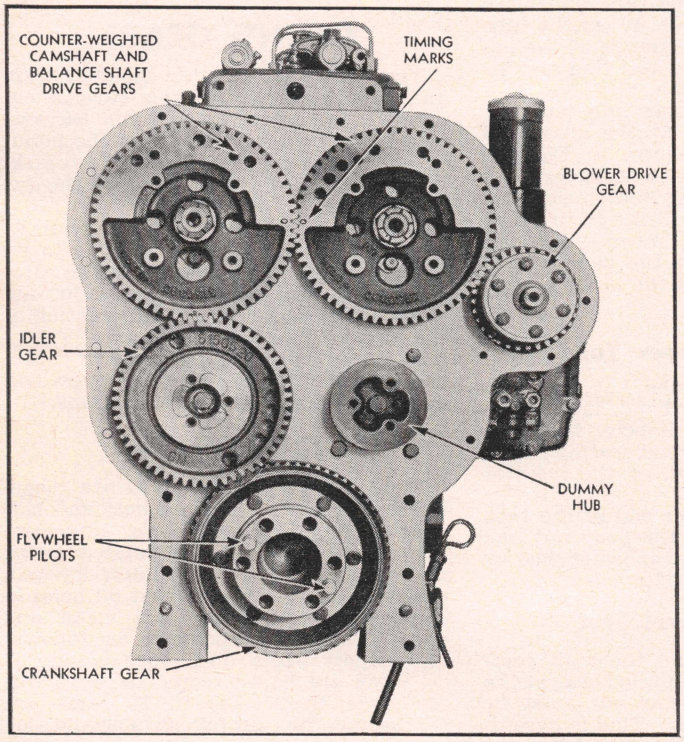

Fig. 21 Gear train and timing marks. Series 71 In-Line engines

ing bushing must project .045″ to .055″ from each end of bearing.

8. Bushings in camshaft front end bearing do not project from bearing. End of inner bushing in front end bearing should be installed flush with end of bearing; end of outer bushing should be flush with counterbore in bearing.

BLOWER DRIVE GEAR

Series 53, 6V-53

The blower drive gear is keyed and pressed onto a shaft which is supported in a housing attached to the rear end plate on In-Line engines. The gear is driven by the camshaft gear or balance shaft gear, depending upon the engine model and rotation.

On 6V-53 engines, the blower drive support is mounted as shown in Fig. 26, and the gear is driven by one of the camshaft gears.

V-71 Engines

The blower drive gear, Fig. 27, is mounted on the blower drive gear support, which is attached to the cylinder block rear end plate. This gear is driven by the right cylinder bank camshaft gear. Since the camshaft gear runs at crankshaft speed, the blower gear, which has about half as many teeth as the camshaft gear, runs approximately twice engine speed.

The blower gear bearings are pressure lubricated through an external line from the blower rear end plate to the blower drive support. The blower(s) must be removed prior to the removal of the blower drive gear and support assembly.

Remove and disassemble the blower drive gear and support as suggested by Fig. 27. Clean all parts with fuel oil and dry with compressed air. Be sure that oil passage in gear support is clean. Discard thrust washers if worn excessively or otherwise damaged.

Check inside diameter of blower drive gear bearings for wear; also check outside diameter of support hub on which gear bearings ride. The inside diameter of new bearings is 1.6260″ to 1.6265″. Clearance between bearings and support should be .001″ to .0025″ with new parts and a maximum of .005″ with used parts. Install new parts whenever clearances exceed the maximum. Should the check show that excessive wear is present, a new support and bearing asembly should be installed.

When assembling, secure the gear to the support and tighten nut to a torque of 50-60 ft lbs. Bend lugs on lock washer against flats on nut. Check clearance between blower drive gear support thrust washer and blower drive gear thrust bearing. Clearance should be .005″ to .010″ and should not exceed .012″ between worn parts.

If spring plates were removed from blower gear hub, attach and torque bolts to 35-39 ft lbs.

In Line 71 Engines

The blower drive gear, Fig. 28, is attached to the blower drive gear hub and located on the blower side of the engine. The blower drive gear drives the blower and, in turn, the governor, water pump and fuel pump. This drive is cushioned by a spring-loaded flexible coupling, insuring uniform rotation to the blower rotors.

With the blower and drive shaft cover removed, the drive gear assembly may be withdrawn from the front face of the cylinder block end plate after disconnecting the oil pipe and removing two bolts holding the gear hub support to the cylinder block end plate.

Although it may be convenient to remove the blower drive gear assembly without taking off the flywheel housing, it has been found that close inspection of the entire gear train is advisable whenever any one of the gears requires service.

To remove the blower drive gear assembly after the flywheel housing has been removed, loosen the blower from the cylinder block and remove the snap ring from the ring groove in the blower drive cam. Withdraw the shaft from the cam and blower rotor gear hub. Loosen seal clamp and slide seal and clamp back on blower drive cover.

Slide blower assembly rearward, exposing the hub nut at the forward end of the blower drive gear hub. Then check the end clearance between the gear hub bearing and thrust washer with a feeler gauge placed between these parts, Fig. 29. Clearance should be .005″ to .008″ with new parts and .010″ with used parts. A clearance in excess of this is sufficient reason for renewing the gear hub support thrust washer or bearings in support.

When the assembly has been removed and disassembled, check the inside diameter of the bearings for wear and roundness; also check outside diameter of hub for wear. Inside diameter of new bearing is 1.6260″ to 1.6265″. Clearance between bearings and hub should be from .001″ to .0025″ with new parts, or .005″ maximum with used parts. Should the check show that bearings and hub are worn excessively, a new support and bearing assembly should be installed.

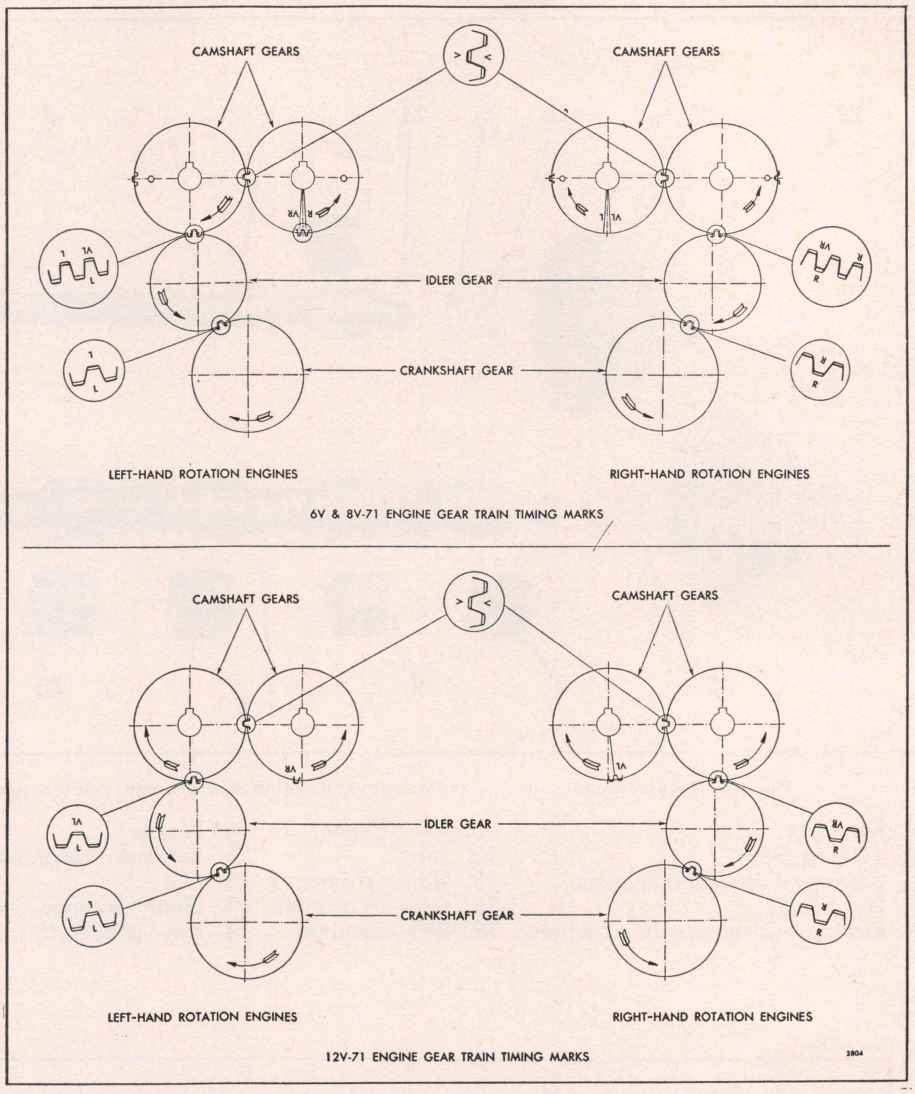

Fig. 22 Gear train and timing marks. V-71 engines

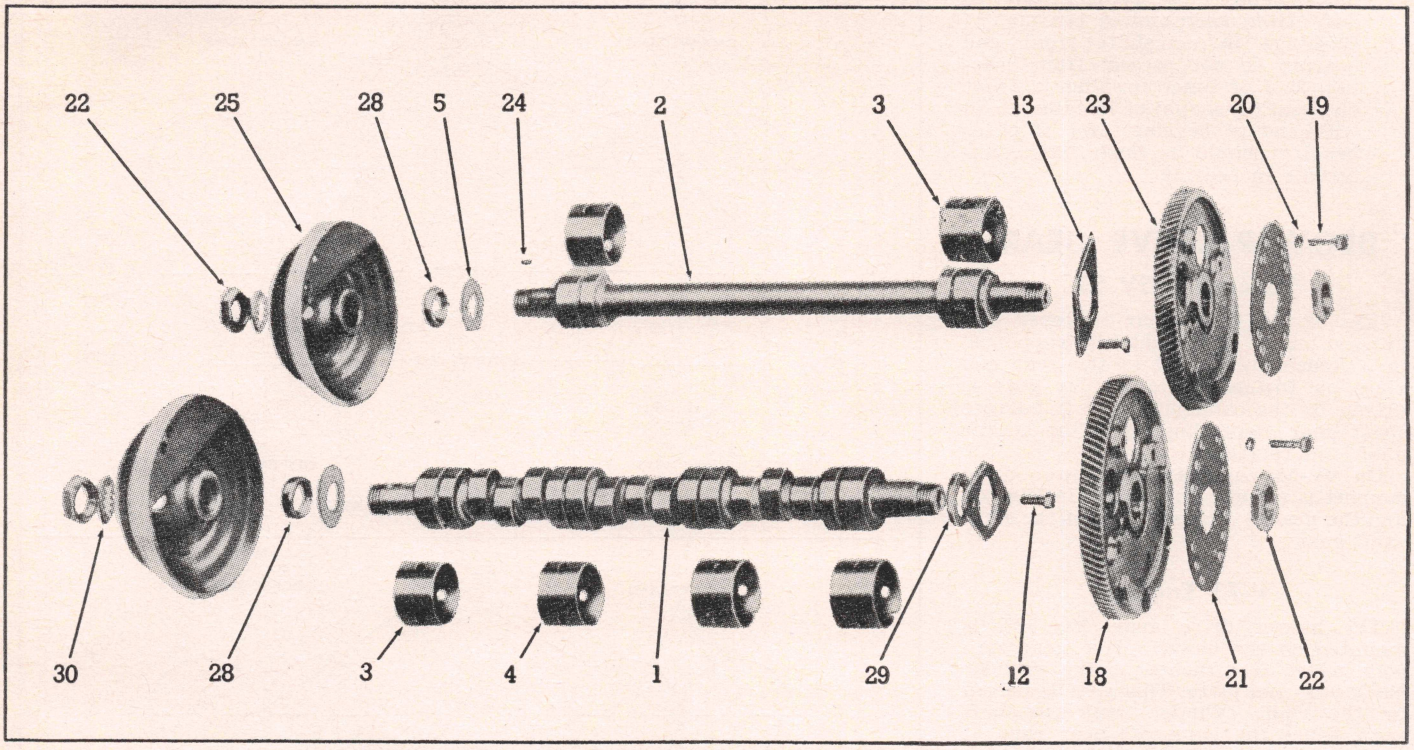

Fig. 23 Disassembled view of camshaft and balance shaft and related parts. Series 53 and 6V-53 engines

1. Camshaft
2. Balance Shaft
3. Bearing--Camshaft--Balance Shaft-End
4. Bearing--Camshaft--Intermediate
5. Oil Slinger
12. Bolt
13. Thrust Washer
18. Gear--Camshaft
19. Bolt--Retainer
20. Washer
21. Retainer--Gear Nut
22. Nut
23. Gear--Balance Shaft
24. Key--Woodruff
25. Pulley--Camshaft--Balance Shaft
28. Spacer--Pulley
29. Spacer--Camshaft Gear
30. Lock Washer

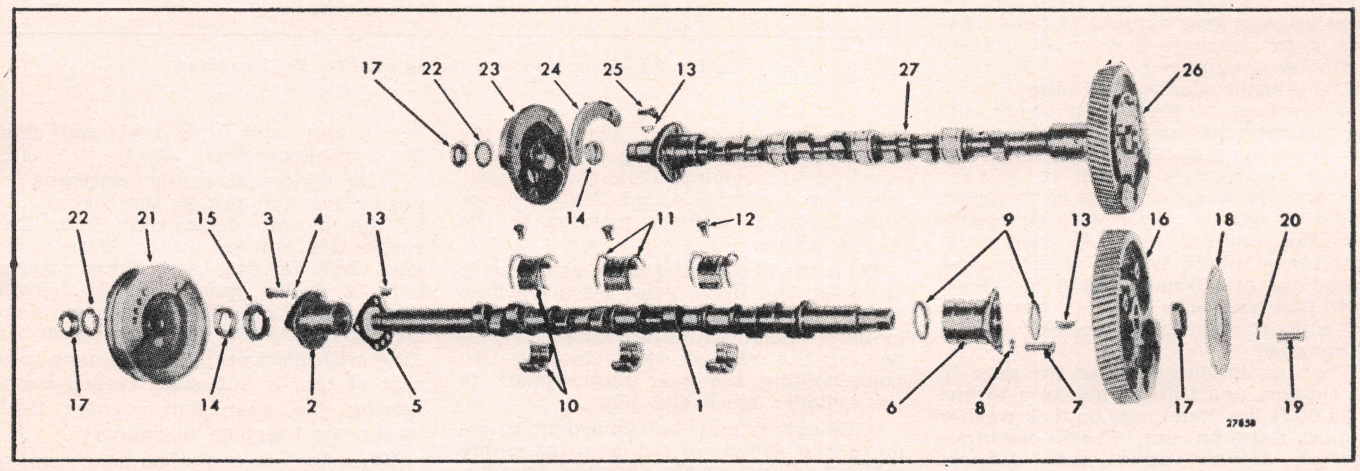

Fig. 24 Camshafts, gears and related parts. V-71 engines

1. Camshaft
2. Bearing--Camshaft Front End
3. Bolt--Bearing Retaining
4. Lock Washer
5. Gasket--Front End Bearing
6. Bearing--Camshaft Rear End
7. Bolt--Bearing Retaining
8. Lock Washer
9. Thrust Washer
10. Bearing--Camshaft Intermediate
11. Lock Ring
12. Set Screw
13. Woodruff Key
14. Spacer
15. Oil Seal
16. Gear--L.H. Helix Camshaft
17. Nut--Gear Retaining
18. Retainer--Gear Nut
19. Bolt--Retainer
20. Lock Washer
21. Pulley
22. Lock Washer
23. Gear--Water Pump Drive
24. Balance Weight
25. Bolt--Weight Retaining
26. Gear--R.H. Helix Camshaft

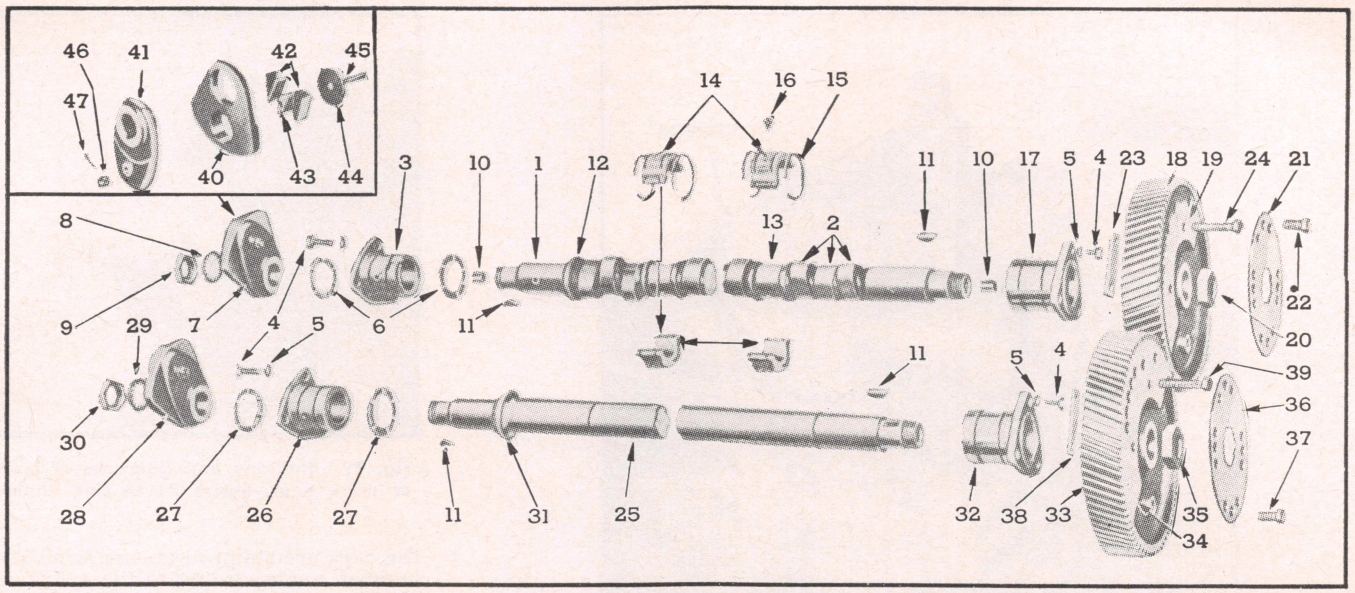

Fig. 25 Camshaft, balancer shaft, gears and related parts. In Line 71's

1. Camshaft
2. Cam
3. Bearing-Camshaft-Front
4. Bolt-Bearing Retainer
5. Lock Washer
6. Washer-Camshaft Thrust
7. Balance Weight Assy.-Camshaft-Front
8. Lock Washer-Camshaft Nut
9. Nut-Camshaft-Front
10. Plug-Camshaft
11. Woodruff Key
12. Thrust Shoulder-Camshaft
13. Journal-Camshaft-Intermediate
14. Bearing-Camshaft-Intermediate
15. Lock Ring-Intermediate Bearing
16. Setscrew-Intermediate Bearing
17. Bearing-Camshaft-Rear
18. Gear-L.H. Helix-Camshaft
19. Weight-Integral Balance-Camshaft
20. Nut-Camshaft-Rear
21. Retainer-Camshaft Gear Nut
22. Bolt-Gear Nut Retainer
23. Balance Weight-Camshaft-Rear
24. Bolt-Weight Retainer
25. Balancer Shaft
26. Bearing-Balancer Shaft-Front
27. Washer-Balancer Shaft Thrust
28. Balance Weight Assy.-Balancer Shaft-Front
29. Lock Washer-Balancer Shaft Nut
30. Nut-Balancer Shaft-Front
31. Thrust Shoulder-Balancer Shaft
32. Bearing-Balancer Shaft-Rear
33. Gear-R.H. Helix-Balancer Shaft
34. Weight-Integral Balance-Balancer Shaft
35. Nut-Balancer-Shaft-Rear
36. Retainer-Balancer Shaft Gear Nut
37. Bolt-Gear Nut Retainer
38. Balance Weight-Balancer Shaft-Rear
39. Bolt-Weight Retainer
40. Balance Weight-Front
41. Hub-Balance Weight
42. Spring-Balance Weight
43. Spacer-Spring
44. Retainer-Spring
45. Bolt-Balance Weight
46. Nut-Balance Weight
47. Cotter Pin

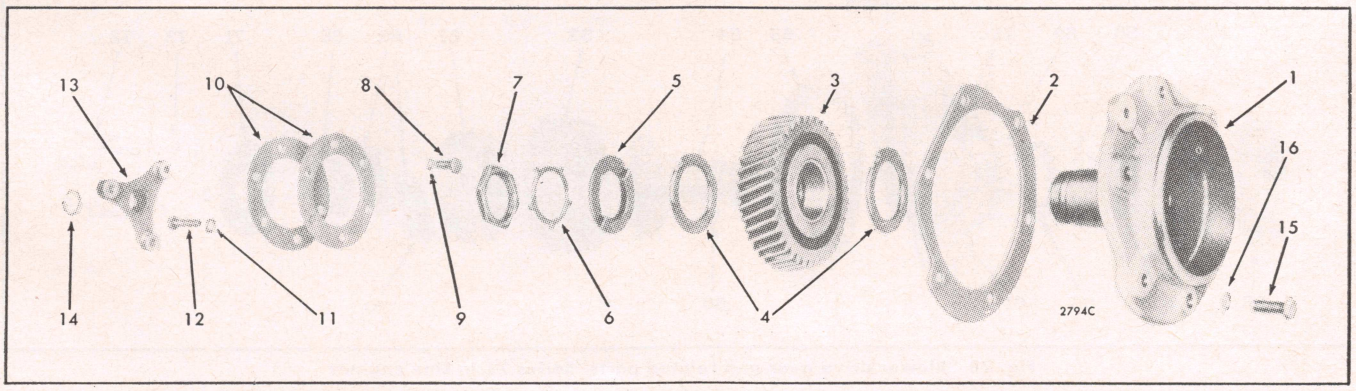

Fig. 27 Blower drive gear and related parts. V-71 engines

1. Support--Blower Drive Gear
2. Gasket
3. Gear--Blower Drive
4. Bearing--Thrust
5. Washer--Thrust
6. Lock Washer
7. Nut--Blower Drive Gear Support
8. Bolt--Spring Plate to Hub
9. Lock Washer
10. Plate--Spring
11. Lock Washer
12. Bolt--Spring Plate to Gear
13. Hub--Blower Drive Gear
14. Snap Ring--Blower Drive Shaft
15. Bolt--Support to End Plate
16. Copper Washer

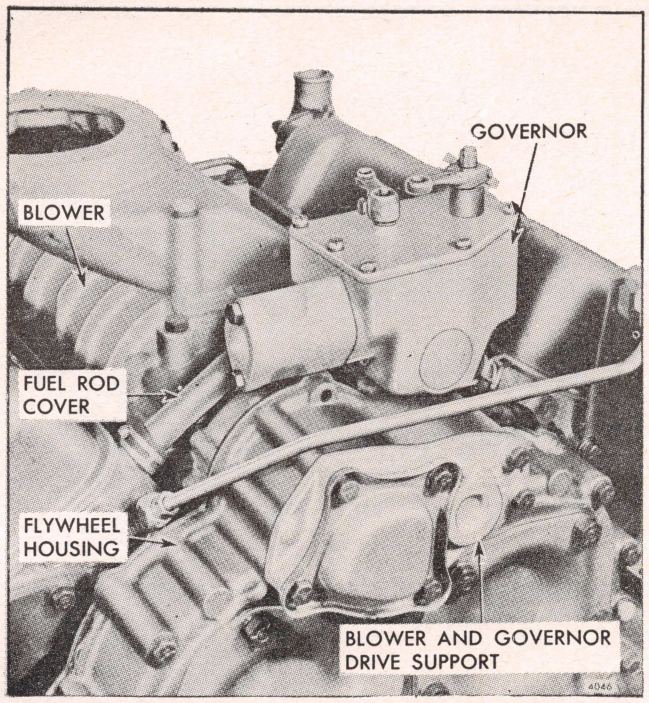

Fig. 26 Blower drive gear support mounting. 6V-53 engines

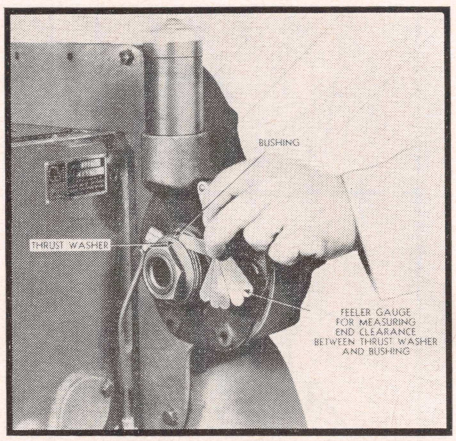

Fig. 29 Checking end clearance of blower drive gear. Series 71 In Line engines

PISTON & ROD, REMOVE

Before removing piston and rod assemblies, check for any excessive looseness of piston in cylinder liner. Check for excessive end play of rods on crankpins.

Remove carbon from the upper inside diameter of cylinder liners. Remove bearing caps from rods and push rod and piston assembly up through top of block.

PISTON & ROD, INSTALL

The lower end of each rod as well as the caps are stamped on one side with a number corresponding to the cylinder in which each rod is used. *The marked side of the rod must always be on the blower side of the block.*

CYLINDER LINERS

Prior to Engine Serial 4A-19537 and 6A-16283 the construction of the cylinder block, cylinder head and liner provided for installing the liner into the cylinder block and permitting the liner flange to be seated directly on the counterbore in the block. This construction provided that the liner should be raised above the cylinder block and compression seal was accomplished by using a conventional cylinder head gasket.

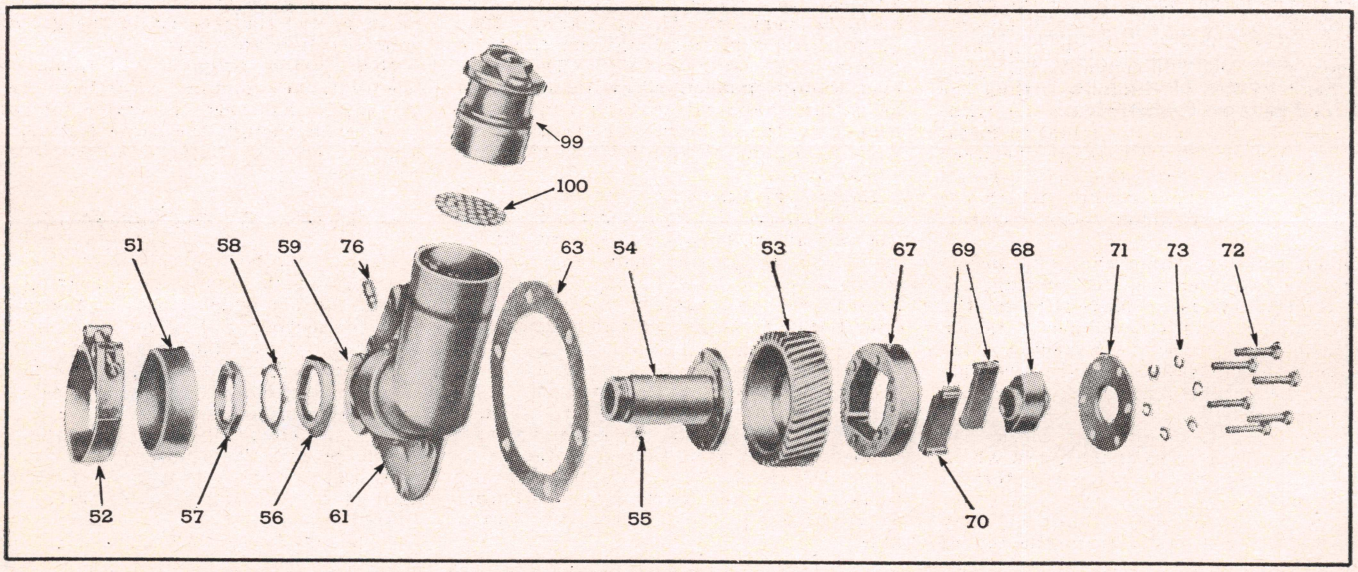

Fig. 28 Blower drive gear and related parts. Series 71 In Line engines

51. Seal-Blower Drive Cover
52. Clamp-Cover Seal
53. Gear-Blower Drive
54. Hub-Blower Drive Gear
55. Ball-Lock
56. Washer-Drive Gear Hub Thrust
57. Nut-Drive Gear Hub
58. Lock Washer
59. Bearing-Drive Gear Hub
61. Support-Drive Gear Hub
63. Gasket-Drive Gear Hub Support
67. Support-Drive Coupling
68. Cam-Drive Coupling
69. Spring (Pack)-Drive Coupling
70. Seat-Coupling Spring
71. Retainer-Drive Coupling
72. Bolt-Drive Coupling
73. Lock Washer
76. Elbow-Oil Pipe
99. Cap-Oil Filler
100. Strainer-Oil Filler

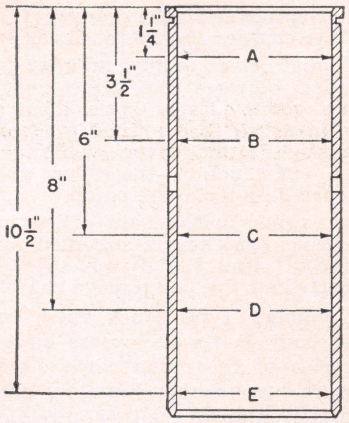

Fig. 30 Cylinder liner measurements

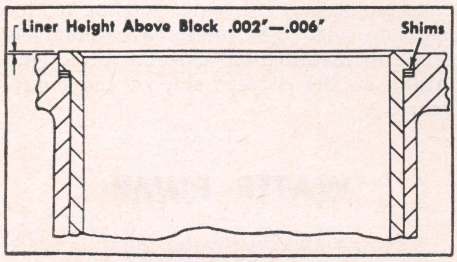

Fig. 31 Use of shims for adjusting liner height

Present design provides for greater depth cylinder block counterbore and use of an insert in the block counterbore to provide a seat for the liner flange. This construction provides that the top of the liner flange be below the top of the cylinder block and compression seal is accomplished by the use of individual gaskets at each cylinder. The conventional cylinder head gasket is eliminated, thus the cylinder head rests directly on the cylinder block and is in metal-to-metal contact. Water and oil passages between block and head are sealed with special grommet type rubber gaskets which are installed in the cylinder block counterbores.

When a cylinder liner change is necessary, due to either wear or scoring, the old liner may be removed from the cylinder block and a new liner installed, or the old liner may be honed oversize and reinstalled. New liners are available only in the standard size *inside* diameter. However, .005", .010", .020" and .030" oversize *outside* diameter liners are available for use in cylinder bores which have been oversized to correct distortion or out-of-roundness.

Since the liners are a loose fit, they may be removed easily from the top of the cylinder block by hand, after loosening with a suitable liner removing tool.

With the liners removed from the block, use a 5/8" diameter brass rod or sharpen a hard wood stick 1" square by 12" long to a tapering point with square edges. Clean each of the air ports by inserting the pointed end of the stick or rod in the port and twisting. Resharpen the stick as often as necessary.

After cleaning the ports, examine the inside of the liner around the port area for burrs. If burrs are found, remove with 250 grit emery paper. Burrs must be removed by hand whether liner is to be honed or not. Failure to remove burrs may result in early and costly failure of pistons and rings.

An alternate method of cleaning the ports is to soak the liner in hot caustic soda or lye solution long enough to loosen the carbon deposits. Final cleaning can be acomplished by a bristle brush.

The liners must not taper more than .001" for its full length or be out-of-round more than .0015" when installed. When measuring cylinder liner with dial indicator, measurements must be taken at 10 places as shown in Fig. 30.

When liners have been in service for any length of time, the inside diameter becomes very smooth or glazed. This glaze, if not removed, lengthens the time required to seat new rings. Therefore, even though inspection reveals a liner to be within specifications and honing unnecessary, the glaze must be removed by working a hone up and down in the liner a few times.

Early type liners must protrude .002" to .006" above the cylinder block. And the variation between adjacent liners should not be greater than .002". Shims of .0015", .003", .005" and .015" thicknesses are available for use under the liner flange to obtain proper liner height as shown in Fig. 31.

With the latest type liner, the top of the liner flange must be .0465" to .050" below the top of the block. If the liner depth is not within these limits, and inspection indicates proper installation, the insert or liners or both should be replaced with new parts since no shims or variable thickness inserts are available.

PISTONS

The top of the piston forms the combustion chamber and is designed to displace the air into close proximity to the fuel spray. The underside of the piston head is reinforced with circular ribs. The ribbed head is cooled by lubricating oil forced from the spray jet on top of the connecting rod.

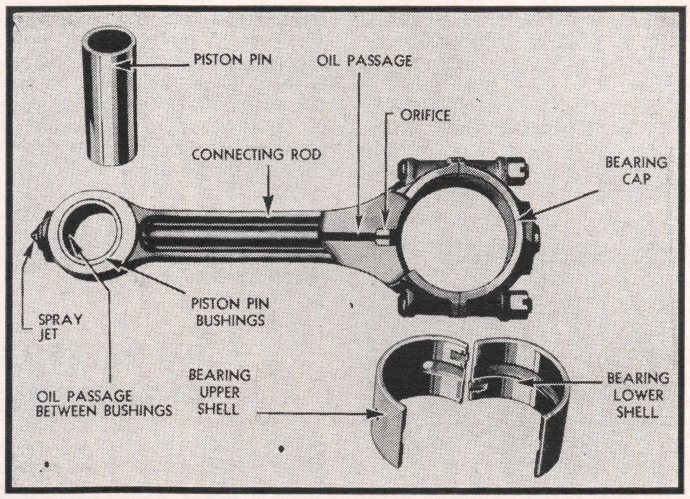

Fig. 32 Connecting rod, piston pin and bearing assembly

A balancing rib is provided on the inside of the bottom of the piston skirt. Because of this design, all pistons are balanced to within .05 lbs., whether the piston is standard or oversize. One or more oversize pistons may be installed in an engine with other standard pistons without effecting balance.

PISTON RINGS

Each piston is fitted with six cast iron rings of the butt joint type. Four 1/8" wide compression rings are placed above the pin and two 3/32" wide special oil control rings are used in each of the two grooves below the piston pin.

The presence of original tool marks on the piston ring surfaces indicates the general absence of wear. Rings should be inspected for free fit in the grooves, side clearance and wear.

New piston rings should always be used with new pistons. Furthermore, if the engine has been in service for some time, even though the same pistons are again used, it is advisable to use new rings.

PINS & BUSHINGS

Each piston boss is lined with a bronze bushing which serves as a bearing for the piston pin which floats in the piston and connecting rod. The bushing has helical oil grooves for passage of oil from the connecting rod bushing. The piston pin is held in the piston with a retainer and snap ring at each side of the piston. The retainer prevents lubricating oil, which returns from the sprayed piston head and the grooves in the piston bushings, from reaching cylinder walls.

RODS & BEARINGS

Each connecting rod, Fig. 32 is rifle-drilled for lubrication of the upper end, and is equipped with an oil spray jet for cooling of the piston head.

The lower end of the connecting rod shank is fitted with a plug which meters oil through the rifle-drilled hole.

Rod bearing shells are of the precision type without shim adjustment. The upper and lower halves of the shells are not interchangeable.

A helically - grooved, steel-backed bronze bushing is pressed into each side of the rod upper end for the piston pin bearing. A cavity of $\frac{3}{16}''$ between the inner ends of the bushings registers with the drilled oil passage in the rod.

Rod bearing shells are available in .002″, .010″, .020″, .030″, .040″, .050″ and .060″ undersizes.

MAIN BEARINGS

Main bearing shells are of the precision type and are replaceable without machining. Each bearing cap is marked with a number and when removed must always be replaced in its respective position.

Crankshaft journals may be reground undersize to accommodate undersize bearings of .010″, .020″, .030″, .040″, .050″ and .060″. If the journals have been overheated, the heat-treating will be destroyed and a new crankshaft should be used.

CRANKSHAFT END PLAY

Crankshaft end thrust is taken through two-piece washers on each side of the rear main bearing. If the crankshaft thrust surface has been reground, it is sometimes necessary to install thrust washers of different thicknesses in order to center the crankshaft properly at the main bearing journal. If thrust surfaces were not worn enough to require regrinding, or if worn and ground off equally, then thrust washers of the same thickness should be installed on both sides of the main bearing.

CRANKSHAFT OIL SEALS

Oil seals are incorporated in the flywheel housing cover at the rear and in the cover at the front of the crankshaft. The seal consists of a special treated leather or synthetic ring set into the cover. The rolled-over inner diameter of the seal is held by a coil spring to prevent oil leakage. The crankshaft timing gear at the rear acts as an oil slinger and throws surplus oil from the gear teeth back into a cavity adjacent to the gear. The oil from this cavity flows back into the oil pan. An oil slinger at the front also assists in preventing excessive oil reaching the seal.

OIL PRESSURE REGULATOR

The lubricating oil pressure regulator valve, located at the end of the oil gallery and integral with the oil pump discharge line, consists of a hollow piston-type valve, a compression spring, a plug to retain the spring and the valve body.

The valve is held on its seat by the spring, which is held in compression by the plug screwed into the valve opening in the valve body. The entire assembly is bolted to the lower flange of the cylinder block and sealed against oil leaks by a gasket between the two members.

When conditions are such that oil pressure at the valve exceed 45 lbs., the valve is lifted from its seat and oil from the engine gallery is by-passed to the engine crankcase.

LUBRICATING OIL PUMP

Gear type lubricating oil pumps are used on all engines. On some engines, the oil pump is driven by a roller chain from a sprocket on the crankshaft while on other engines the pump is gear driven.

On gear driven pumps, an idler gear is installed between the drive gear and driven gears. Early style idler gears were attached to a special stud on the crankshaft front cover, while on the latest construction the idler gear is attached directly to the pump.

On engines with chain driven pump, the drive sprocket is installed on the crankshaft and the driver sprocket is supported on the pump drive shaft.

A plunger type relief valve in the pump body by-passes excess oil to the inlet side of the pump when discharge pressure exceeds approximately 100 lbs.

To accommodate either direction of engine rotation and have the flow of oil through the pump in the proper direction, the relief valve assembly may be changed from one side of the pump housing to the opposite side. The pump cover must be properly installed in order to direct oil intake on the correct side of the pump gears.

WATER PUMP

A centrifugal type water pump is used. A bronze impeller is pressed and pinned onto one end of the water pump shaft, and a pump drive coupling and oil slinger is pressed onto the opposite end. The oil slinger shrouds the inner end of the pump body flange to prevent oil from seeping along the shaft and through the shaft bearing. The shaft is supported at the drive end by a sealed, double-row combination radial and thrust ball bearing.

GMC TRUCKS

INDEX OF SERVICE OPERATIONS

PAGE NO.

AIR SUSPENSION 743

AXLES, DRIVING

Eaton Axle Service 176
G.M.C. Axles 734
Locking Differentials 169
Timken Axle Service 209

BRAKES

Adjustments 252
Air Brake System 259
Hydraulic Brake System 250
Vacuum Brake Boosters 268

CLUTCH 720

COOLING SYSTEM

Cooling System Capacity 682
Radiator, Replace 712
Water Pump Repairs 711
Water Pump, Replace 711

ELECTRIC SYSTEM

Alternators & Regulators 37
Dash Gauge Service 93
Distributor Specifications 691
Distributor Service 7
Generator Specifications 688
Generator & Regulator Service 27
Ignition, Transistorized 22
Ignition Timing 714
Starting Motor Specifications 690
Starting Motor Service 65
Starter Switch Service 85

ENGINE

Camshaft & Bearings 705
Crankshaft Bearing Specifications 686
Crankshaft End Play, Adjust 708
Crankshaft Oil Seal, Replace 708
Cylinder Head, Replace 694
Exhaust Valve Water Nozzles 700
Main Bearings, Replace 708
Piston Pins, Replace 708
Piston Rings, Replace 708
Piston & Ring Specifications 686
Pistons & Rods, Remove 707
Piston & Rod, Assemble 707
Pistons, Replace 707
Rocker Arm Service 696
Rod Bearings, Replace 708
Timing Chain 705
Timing Gear Cover 704
Timing Gears 704
Valves, Adjust 697
Valves, Grind 699
Valve Guides 701
Valve Lifters 703

PAGE NO.

Valves, Remove 698
Valve Rotators 700
Valve Seat Inserts 700
Valve Spring Installed Height 701
Valve Spring Testing 701
Valve Specifications 687
Valve Stems, Grinding 701
Valve Water Nozzles 700

ENGINE OILING

Crankcase Capacity 682
Crankcase Ventilation 6
Oil Pan, Replace 709
Oil Pump Repairs 709

FRONT SUSPENSION 749

FUEL SYSTEM

Automatic Choke 719
Carburetor Adjustments 717
Carburetor Governors 719
Carburetor Service Notes 716
Crankcase Ventilation 6
Fuel Pump Service 104
L.P.G. Carburetion 109

SPECIFICATIONS

Carburetor Adjustment 717
Crankshaft & Bearing 686
Distributor 691
Engine Tightening Torque 688
Generator & Regulator 688
Piston, Pin & Ring 686
Starting Motor 690
Tune Up 687
Valve 687
Wheel Alignment 692

STEERING GEARS 753

TRANSFER CASES 242

TRANSMISSIONS

Clark 110
Fuller 122
G.M.C. 725
Hydra-Matic 313
Hydra-Matic Linkage 732
New Process 135
Spicer 141
Warner 164
Powermatic 281

TUNE UP SERVICE 2

MODEL INDEX & ENGINE APPLICATION

ENGINE IDENTIFICATION—The GMC Service Parts Identification Plate is located inside the cab or on the truck firewall. Stamped on the plate is the model of the engine, transmission, auxiliary transmission, service brakes, front and rear axles. This information represents only the equipment on the vehicle when it was shipped from the factory.

1960-63 CONVENTIONAL GASOLINE

Model	Year	Engine Make	Standard Engine Model	Crank-case Refill Capacity, Qts.	Cooling System Capacity, Qts.
1000	1963	Own	305E-V6	5	32
1000	1962	Own	305D-V6	5	33
1000	1960–61	Own	305A-V6	5	33
K1000	1963	Own	305E-V6	5	32
K1000	1962	Own	305D-V6	5	33
K1000	1960–61	Own	305A-V6	5	33
1500	1963	Own	305E-V6	5	34
1500	1962	Own	305D-V6	5	33
1500	1960–61	Own	305A-V6	5	33
K1500	1963	Own	305E-V6	5	34
K1500	1962	Own	305D-V6	5	33
K1500	1960–61	Own	305A-V6	5	33
2500	1963	Own	305E-V6	5	34
2500	1962	Own	305D-V6	5	33
2500	1960–61	Own	305A-V6	5	33
V3000	1962	Own	305D-V6	5	33
V3000	1960–61	Own	305A-V6	5	33
3500	1963	Own	305E-V6	5	35
V3500	1962	Own	305D-V6	5	35
V3500	1960–61	Own	305A-V6	5	35
4000	1963	Own	305C-V6	5	40
A4000	1962–63	Own	305C-V6	5	40
A4000	1960–61	Own	305B-V6	8	40
H4000	1963	Own	305C-V6	5	40
V4000	1962–63	Own	305C-V6	5	40
V4000	1960–61	Own	305B-V6	8	40
5000	1960–63	Own	351-V6	8	39
H5000	1961–63	Own	401-V6	8	37
A6000	1963	Own	401-V6	8	37
A6500	1962–63	Own	478-V6	8	35
W5000	1960–63	Own	351-V6	8	39
WV5500	1960–63	Own	401-V6	8	37
WA5500	1960–63	Own	401-V6	8	37
WA6500	1962	Own	478-V6	8	35
WA6500	1963	Own	478-V6	8	37
B3500	1963	Own	305E-V6	5	35
B4000	1963	Own	305C-V6	5	40
BA4000	1962–63	Own	305C-V6	5	40
BA4000	1960–61	Own	305B-V6	8	40
BH4000	1963	Own	305C-V6	5	40
BV4000	1962–63	Own	305C-V6	5	40
BV4000	1960–61	Own	305B-V6	8	40
B5000	1961–63	Own	351-V6	8	39
BA5000	1960–61	Own	351-V6	8	39
BH5000	1963	Own	401-V6	8	37
BV5000	1960–61	Own	351-V6	8	39
BW5000	1961–63	Own	351-V6	8	39
BWA5000	1960–61	Own	351-V6	8	39
BWV5000	1960–61	Own	351-V6	8	39
B5500	1961–63	Own	401-V6	8	37
BA5500	1960–61	Own	401-V6	8	37
BV5500	1960–61	Own	401-V6	8	37
BWA5500	1960–63	Own	401-V6	8	37
BWV5500	1960–61	Own	401-V6	8	37
B6000	1961–63	Own	401-V6	8	37
BA6000	1960–63	Own	401-V6	8	37
BV6000	1960–61	Own	401-V6	8	37
BA6500	1962–63	Own	478-V6	8	35
B7000	1960–63	Own	702-V12	14	64
BW7000	1960–63	Own	702-V12	14	64
BW9000	1960–61	Own	702-V12	14	64

1960-63 TILT CAB GASOLINE

Model	Year	Engine Make	Standard Engine Model	Crank-case Refill Capacity, Qts.	Cooling System Capacity, Qts.
L4000	1963	Own	305C-V6	5	47
LA4000	1962–63	Own	305C-V6	8	47
LA4000	1960–61	Own	305B-V6	8	47
LH4000	1963	Own	305C-V6	5	47
LV4000	1962–63	Own	305C-V6	8	47
LV4000	1960–61	Own	305B-V6	8	47
L5000	1961–63	Own	351-V6	8	45
LA5000	1960–61	Own	351-V6	8	45
LH5000	1963	Own	401-V6	8	43
LV5000	1960–61	Own	351-V6	8	45
LWA5000	1960–61	Own	351-V6	8	45
LWV5000	1960–61	Own	351-V6	8	45
L5500	1961–63	Own	401-V6	8	43
LA5500	1960–61	Own	401-V6	8	43
LV5500	1960–61	Own	401-V6	8	43
LWA5500	1960–63	Own	401-V6	8	43
LA6000	1960–63	Own	401-V6	8	43
LA6500	1962–63	Own	478-V6	8	42
L7000	1960–63	Own	702-V12	14	71
LW7000	1960–63	Own	702-V12	14	71

1960-63 FORWARD CONTROL

Model	Year	Engine Make	Standard Engine Model	Crank-case Refill Capacity, Qts.	Cooling System Capacity, Qts.
P1000	1963	Own	4–153	4	8¼
P1500	1963	Own	6–230	4	14
P1500	1960–62	Own	6-270	8	17
P2500	1963	Own	6–230	4	14
P2500	1960–62	Own	6-270	8	17

1960-63 SCHOOL BUS

Model	Year	Engine Make	Standard Engine Model	Crank-case Refill Capacity, Qts.	Cooling System Capacity, Qts.
S4000	1963	Own	305C-V6	5	40
SA4000	1962–63	Own	305C-V6	8	40
SA4000	1960–61	Own	305B-V6	8	40
SV4000	1962–63	Own	305C-V6	8	40
SV4000	1960–61	Own	305B V6	8	40
S5000	1961–63	Own	351-V6	8	39
SA5000	1960–61	Own	351-V6	8	39
SV5000	1960–61	Own	351-V6	8	39
SP5000	1963	Own	351-V6	8	39
SP5000	1961–62	Own	351-V6	8	41
SPA5000	1960–61	Own	351-V6	8	41
SPV5000	1960–61	Own	351-V6	8	40½

Model	Year	Engine Make	Standard Engine Model	Crank-case Refill Capacity, Qts.	Cooling System Capacity, Qts.
1960-63 "B" CONVENTIONAL DIESEL					
D860	1960–62	Own	6-71SE	22	39
DB7000	1960–62	Own	6V-71	18	54
DB7000	1963	Own	6V-71	18	48
DBW7000	1963	Own	6V-71	18	48
DBW7000	1960–62	Own	6V-71	18	54
DBW9000	1960–61	Own	6V-71	18	54
1960-63 TILT CAB DIESEL					
DF7000	1960–62	Own	6V-71	18	54
DF7000	1963	Own	6V-71	18	48
DL7000	1963	Own	6V-71	18	55
DL7000	1960–62	Own	6V-71	18	59
DFW7000	1960–62	Own	6V-71	18	59
DLW7000	1963	Own	6V-71	18	55
DFW7000	1963	Own	6V-71	18	48
DFW7000	1960–62	Own	6V-71	18	54
DF7100	1960–62	Own	8V-71	24	58
DF7100	1963	Own	8V-71	24	55
DFW7100	1960–62	Own	8V-71	24	58
DFW7100	1963	Own	8V-71	24	55
DFR8000	1960–63	Own	6V-71	18	58
DLR8000	1960–63	Own	6-71SE	22	51
DFR8100	1960–63	Own	8V-71	24	58
DB17000	1963	Own	6–71SE	22	40
DBW17000	1963	Own	6–71SE	22	40
DF17000	1963	Own	6–71SE	22	40
DFW17000	1963	Own	6–71SE	22	40
1952-59 4 WHEEL CONVENTIONAL					
100	1955	Own	6–248A	8	17
100	1956–59	Own	6–270A	8	17
100–8	1955	Own	8–288A	5	26
100–8	1956	Own	8–316A	5	26
100–8	1957	Own	8–347	5	17
100–8	1958–59	Own	8–336A	5	25
100–22	1952–53	Own	6–228	8	17
100–24	1954	Own	6–248	8	18
150	1955	Own	6–248A	8	17
150	1956–59	Own	6–270A	8	17
150–8	1955	Own	8–288A	5	26
150–8	1956	Own	8–316A	5	26
150–8	1957	Own	8–347	5	17
150–8	1958–59	Own	8–336A	5	25
150–22	1952–53	Own	6–228	8	18
150–24	1954	Own	6–248	8	18
PM150	1956	Own	6–270C	8	17
PM150	1957–59	Own	6–270A	8	17
250	1955	Own	6–248A	8	17
250	1956–59	Own	6–270A	8	17
250–8	1955	Own	8–288A	5	26
250–8	1956	Own	8–316A	5	26
250–8	1957	Own	8–347	5	17
250–8	1958–59	Own	8–336A	5	25
PM250	1956	Own	6–270C	8	17
PM250	1957–59	Own	6–270A	8	17
250–22	1952–53	Own	6–228	8	18
250–24	1954	Own	6–248	8	18
280– 2	1952–53	Own	6–228	8	18
300	1955	Own	6–248	8	18
300	1956–57	Own	6–270A	8	17
300	1958–59	Own	6–270A	8	22
300–8	1955	Own	8–288A	5	18
300–8	1956	Own	8–316A	5	26
300–24	1952–54	Own	6–248	8	18
350	1955	Own	6–248	8	18
350	1956–59	Own	6–270B	8	23
350–8	1955	Own	8–288	5	26
350–8	1956	Own	8–316B	5	26
350–8	1957	Own	8–347	5	17
350–8	1958–59	Own	8–336B	5	30
P350	1958–59	Own	6–270B	8	17
350–24	1952–54	Own	6–248	8	18
350–27	1954	Own	6–270	8	18
370	1955–56	Own	6–270B	8	18
370	1957–59	Own	6–270B	8	23
370–8	1955	Own	8–288	5	26
370–8	1956	Own	8–316B	5	26
370–8	1957	Own	8–347	5	17
370–8	1958–59	Own	8–336B	5	30
400	1955	Own	6–270	8	18
400–8	1955	Own	8–288	5	26
400–27	1952–54	Own	6–270	8	18
410V	1955	Own	6–270	8	18
410V-8	1955	Own	8–288	5	26
450A	1955–57	Own	6–302	8	18
450A	1958–59	Own	6–302	8	23
450V	1955–57	Own	6–302	8	18
450V	1958–59	Own	6–302	8	23
450-8A	1956	Own	8–316B	5	26
450-8A	1957	Own	8–347	5	17
450-8A	1958–59	Own	8–336B	5	30
450-8V	1956	Own	8–316B	5	26
450-8V	1957	Own	8–347	5	17
450-8V	1958–59	Own	8–336B	5	30
450-30	1952–54	Own	6–302	8	18
470-30	1952–54	Own	6–302	8	18
500A	1955	Own	6–302	8	18
500V	1955	Own	6–302	8	18
550A	1955–56	Own	8–324	5	24
550A	1957–59	Own	8–370	5	24
550V	1955–56	Own	8–324	5	24
550V	1957–59	Own	8–370	5	24
600A	1955	Own	6–360	9	25
600A	1956	Own	8–324	5	24
600A	1957–59	Own	8–370	5	24
A600	1957–59	Own	8–370	5	24
620–36	1952–54	Own	6–360	9	25
630A	1956	Own	6–503A	9	29
630A	1957–59	Own	6–503	9	27½
630V	1956	Own	6–503B	9	29
630V	1957–59	Own	6–503	9	27½
630–42	1952–54	Own	6–426	9	27
630-42	1955	Own	6–426	9	29
630-50	1952–54	Own	6–503	9	27
630-50	1955	Own	6–503	9	29
660	1956	Own	6–503B	9	29
660	1957	Own	6–503	9	27½
660	1958–59	Own	6–503	9	29
660-50	1952–54	Own	6–503	9	27
660-50	1955	Own	6–503	9	29
670-50	1952–54	Own	6–503	9	27
670-50	1955	Own	6–503	9	29
R800	1957–59	Own	6–503	9	29

1952-59 4 WHEEL C.O.E. MODELS

Model	Year	Engine Make	Standard Engine Model	Crank-case Refill Capacity, Qts.	Cooling System Capacity, Qts.
F350	1955	Own	6-248	8	18
F350	1956-57	Own	6-270B	8	18
F350	1958-59	Own	6-270B	8	23
F350-8	1955	Own	8-288	5	26
F350-8	1956	Own	8-316B	5	26
F350-8	1957	Own	8-347	5	17
F350-8	1958-59	Own	8-336B	5	30
FM350	1955	Own	6-248D	8	19
FM350-8	1955	Own	8-288D	5	27
F370	1955-56	Own	6-270B	8	18
F370	1957-59	Own	6-270B	8	23
F370-8	1955	Own	8-288	5	26
F370-8	1956	Own	8-316B	5	26
F370-8	1957-59	Own	8-336B	5	30
FM370	1955	Own	6-270D	8	19
FM370-8	1955	Own	8-288D	5	27
F410V	1955	Own	6-270	8	18
F410V-8	1955	Own	8-288	5	26
FM410V	1955	Own	6-270D	8	19
FM410V-8	1955	Own	8-288D	5	27
F450A	1955-56	Own	6-302	8	18
F450A	1957-59	Own	6-302	8	23
F450V	1955-56	Own	6-302	8	18
F450V	1957-59	Own	6-302	8	23
F450-8A	1956	Own	8-316B	5	26
F450-8A	1957	Own	8-347	5	17
F450-8A	1958-59	Own	8-336B	5	30
F450-8V	1956	Own	8-316B	5	26
F450-8V	1957	Own	8-347	5	17
F450-8V	1958-59	Own	8-336B	5	30
F450-30	1952-54	Own	6-302	8	18
F470-30	1952-54	Own	6-302	8	18
F500	1955	Own	6-302	8	18
FM500	1955	Own	6-302D	8	19½
F550	1956	Own	8-324	5	22½
F550	1957	Own	8-370	5	19
F550	1958-59	Own	8-370	5	24
FA550	1957-59	Own	8-370	5	24
F600	1956	Own	8-324	5	22½
F600	1957-59	Own	8-370	5	24
FA600	1957-59	Own	8-370	5	24
F630	1956	Own	6-503A	9	29
F630	1957-59	Own	6-503	9	27½
F630-42	1952-54	Own	6-426	9	27
F630-42	1955	Own	6-426B	9	29
F660	1956-59	Own	6-503	9	29
FM660	1956	Own	6-503B	9	30½
F660-50	1952-54	Own	6-503	9	27
F660-50	1955	Own	6-503B	9	29
FM660-50	1955	Own	6-503E	9	30½
FR800	1958-59	Own	6-503	9	29

1952-59 SIX WHEEL CONVENTIONAL

Model	Year	Engine Make	Standard Engine Model	Crank-case Refill Capacity, Qts.	Cooling System Capacity, Qts.
W500A	1956	Own	8-316B	5	26
W500A	1957	Own	8-347	5	17
W500A	1958-59	Own	8-336B	5	30
W500V	1955	Own	6-302	8	18
W500V	1956	Own	8-316B	5	26
W500V	1957	Own	8-347	5	17
W500V	1958-59	Own	8-336B	5	30
MW500	1955	Own	6-302D	8	19½
MW500	1956	Own	8-316B	5	26
MW500	1957	Own	8-347	5	17
MW500	1958-59	Own	8-336B	5	29
W550	1957-59	Own	8-370	5	19
MW550	1957-59	Own	8-370	5	19
W620-42	1955	Own	6-426	9	29
MW620-42	1955	Own	6-426D	9	30½
W630	1956	Own	6-503A	9	29
W630	1957-59	Own	6-503	9	27½
MW630	1956	Own	6-503A	9	30½
W630-50	1952-54	Own	6-503	9	27
W630-50	1955	Own	6-503	9	29
MW630-50	1955	Own	6-503D	9	30½
W660	1956	Own	6-503	9	29
W660	1957	Own	6-503	9	27½
W660	1958-59	Own	6-503	9	29
MW660	1956	Own	6-503B	9	30½
W670	1956	Own	6-503	9	29
W670	1957	Own	6-503	9	27½
W670	1958-59	Own	6-503	9	29

1952-59 SIX WHEEL C.O.E. MODELS

Model	Year	Engine Make	Standard Engine Model	Crank-case Refill Capacity, Qts.	Cooling System Capacity, Qts.
FW550	1956	Own	8-324	5	24
FW550	1957-59	Own	8-370	5	24
FMW550	1956	Own	8-324	5	22½
FMW550	1957-59	Own	8-370	5	23
FW620-42	1955	Own	6-426B	9	29
FMW620-42	1955	Own	6-426E	9	30½
FW630-50	1955	Own	6-503	9	29
FMW630-50	1955	Own	6-503	9	30½
FW660	1956-59	Own	6-503	9	29
FMW660	1956	Own	6-503	9	30½

1952-59 SCHOOL BUS MODELS

Model	Year	Engine Make	Standard Engine Model	Crank-case Refill Capacity, Qts.	Cooling System Capacity, Qts.
S300	1955	Own	6-248	8	18
S300	1956-59	Own	6-270A	8	22
S300-8	1955	Own	8-288A	5	18
S370	1957-59	Own	6-270B	8	23
S370-8	1956	Own	8-347	5	17
S370-8	1957-59	Own	8-336B	5	30
S450	1955-57	Own	6-302	8	18
S450	1958-59	Own	6-302	8	23
SFM460	1957-59	Own	6-302	8	23

1952-59 FOUR WHEEL CONVENTIONAL DIESEL

Model	Year	Engine Make	Standard Engine Model	Crank-case Refill Capacity, Qts.	Cooling System Capacity, Qts.
D630	1956-59	Own	4-71	21	30
D630-47	1952-54	Own	4-71	21	26
D630-47	1955	Own	4-71	21	28
D660	1956-59	Own	4-71	21	30
D660-47	1952-54	Own	4-71	21	26
D660-47	1955	Own	4-71	21	28
DR860	1958-59	Own	6-71	26	39
D860	1958-59	Own	6-71	26	39
D930	1956	Own	6-71	26	39

Model	Year	Engine Make	Standard Engine Model	Crank-case Refill Capacity, Qts.	Cooling System Capacity, Qts.
D930	1957	Own	6-71T	22	39
D930	1958-59	Own	6-71SE	22	39
D930-67	1955	Own	6-71	26	39

1952-59 FOUR WHEEL C.O.E. DIESEL

DF660	1956-59	Own	4-71	21	30
DF860	1956	Own	6-71B	26	39
DF860	1957-59	Own	6-71SE	22	39
DFM860	1956	Own	6-71C	26	40½
DFW860	1956	Own	6-71B	26	39
DF860-67	1955	Own	6-71B	26	39
DFM860-67	1955	Own	6-71C	26	40½
DF920	1956	Own	6-71	26	39
DFM920	1956	Own	6-71A	26	40½
DF920-67	1955	Own	6-71	26	39
DFM920-67	1955	Own	6-71A	26	40½
DFW950	1956	Own	6-71	26	39
DFW950	1957-58	Own	6-71T	22	39
DFMW950	1956	Own	6-71A	26	40½
DFM950-67	1955	Own	6-71	26	39
DFMW950-67	1955	Own	6-71C	26	40½

1952-59 SIX WHEEL CONVENTIONAL DIESEL

DW660	1956-59	Own	4-71	21	30
DW950	1956	Own	6-71	26	39
DW950	1957	Own	6-71T	22	39
DW950	1958-59	Own	6-71SE	22	39
DW950-67	1955	Own	6-71	26	39
DW970	1956	Own	6-71	26	39
DW970	1957	Own	6-71T	22	39
DW970	1958-59	Own	6-71SE	22	39
DW970-67	1955	Own	6-71	26	39

1952-59 SIX WHEEL C.O.E. DIESEL

DFR860	1957-59	Own	6-71SE	22	39
DFRW860	1957-59	Own	6-71SE	22	39

GENERAL ENGINE SPECIFICATIONS

Year	Engine Model	No. Cyls. & Valve Location	Bore & Stroke	Piston Displacement, Cu. In.	Compression Ratio	Maximum Brake H. P. @ R. P. M.	Maximum Torque, Lb. Ft. @ R. P. M.	Normal Oil Pressure, Lbs.
1952-54	228	6 In Head	3 9/16 x 3 13/16	228	8.0	95 @ 3200	183 @ 1000	35-40
1952-54	248	6 In Head	3 23/32 x 3 13/16	248.5	7.5	100 @ 3100	202 @ 1000	35-40
1955	248	6 In Head	3 23/32 x 3 13/16	248.5	7.5	130 @ 3600	214 @ 1550	35-40
1955	248A	6 In Head	3 23/32 x 3 13/16	248.5	7.5	125 @ 3600	210 @ 1200	35-40
1955	248C	6 In Head	3 23/32 x 3 13/16	248.5	7.5	105 @ 3200	200 @ 1400	35-40
1955	248D	6 In Head	3 23/32 x 3 13/16	248.5	7.5	130 @ 3600	214 @ 1550	35-40
1952-54	270	6 In Head	3 25/32 x 4	269.5	7.5	130 @ 3400	232 @ 1000	35-40
1955	270	6 In Head	3 25/32 x 4	269.5	7.5	140 @ 3600	238 @ 1400	35-40
1955	270D	6 In Head	3 25/32 x 4	269.5	7.5	140 @ 3600	238 @ 1400	35-40
1956	270A	6 In Head	3 25/32 x 4	269.5	7.75	130 @ 3600	238 @ 1200	35-40
1956	270B	6 In Head	3 25/32 x 4	269.5	7.75	140 @ 3600	246 @ 1400	35-40
1956	270C	6 In Head	3 25/32 x 4	269.5	7.75	120 @ 3200	238 @ 1200	35-40
1957-59	270A	6 In Head	3 25/32 x 4	269.5	7.75	130 @ 3600	238 @ 1200	35-40
1957-59	270B	6 In Head	3 25/32 x 4	269.5	7.75	140 @ 3600	246 @ 1400	35-40
1960-62	270	6 In Head	3 25/32 x 4	269.5	7.75	133 @ 3600	244 @ 1300	35-40
1955	288	8 In Head	3¾ x 3¼	287.2	7.4	155 @ 3600	246 @ 2400	35-40
1952-54	302	6 In Head	4 x 4	301.6	7.2	145 @ 3600	262 @ 1200	35-40
1955	302	6 In Head	4 x 4	301.6	7.5	155 @ 3600	268 @ 1400	35-40
1955	302D	6 In Head	4 x 4	301.6	7.5	155 @ 3600	268 @ 1400	35-40
1956-59	302	6 In Head	4 x 4	301.6	7.50	160 @ 3800	268 @ 1600	35-40
1956	316A	8 In Head	3 15/16 x 3¼	316.7	7.80	180 @ 4400	276 @ 2200	35-40
1956	316B	8 In Head	3 15/16 x 3¼	316.7	7.80	180 @ 4400	276 @ 2200	35-40
1952-53	318	6 In Head	3⅞ x 4½	318	6.5	136 @ 3400	245 @ 1400	35-40
1955	324	8 In Head	3⅞ x 3 7/16	324.31	7.5	175 @ 3800	305 @ 2000	35-40
1956	324	8 In Head	3⅞ x 3 7/16	324.3	7.50	210 @ 4200	305 @ 2400	35-40
1958-59	336	8 In Head	3⅞ x 3 9/16	336.1	7.5	200 @ 4400	307 @ 2000	35-40
1957	347	8 In Head	3 15/16 x 3 9/16	347.0	7.80	206 @ 3600	354 @ 2400	35-45
1952-54	360	6 In Head	4⅛ x 4½	360.8	6.5	127 @ 3000	289 @ 1300	35-40
1955	360	6 In Head	4⅛ x 4½	360.8	7.25	170 @ 3400	318 @ 1100	35-40
1957-59	370	8 In Head	4 x 3 11/16	370.7	7.65	232 @ 4200	355 @ 2600	35-45
1952-54	426	6 In Head	4¼ x 5	425.6	6.5	177 @ 3200	337 @ 1200	35-40
1955	426	6 In Head	4¼ x 5	425.6	6.85	190 @ 3200	350 @ 1000	35-40
1952-54	503	6 In Head	4 9/16 x 5⅛	502.7	6.5	190 @ 3000	415 @ 1200	35-40

GENERAL ENGINE SPECIFICATIONS continued

Year	Engine Model	No. Cyls. & Valve Location	Bore & Stroke	Piston Displacement, Cu. In.	Compression Ratio	Maximum Brake H. P. @ R. P. M.	Maximum Torque, Lb. Ft. @ R. P. M.	Normal Oil Pressure, Lbs.
1955–56	503A	6 In Head	4 9/16 x 5 1/8	502.7	6.85	205 @ 3000	436 @ 1000	35–40
1955–59	503	6 In Head	4 9/16 x 5 1/8	502.7	6.85	225 @ 3200	436 @ 1200	35–40
1960–63	305-V6	6 In Head	4.25 x 3.58	305	7.75	165 @ 3800	280 @ 1600	35–40
1960–63	351-V6	6 In Head	4.56 x 3.58	351	7.50	180 @ 3400	312 @ 1800	35–40
1960–63	401-V6	6 In Head	4.87 x 3.58	401	7.50	210 @ 3400	377 @ 1400	35–40
1962–63	478-V6	6 In Head	5.125 x 3.86	477.7	7.50	235 @ 3200	440 @ 1400	35–40
1960–63	702-V12	12 In Head	4.56 x 3.58	702	7.50	275 @ 2400	630 @ 1600	35–40

PISTON, PIN, RING, CRANKSHAFT & BEARING SPECIFICATIONS

Year	Engine Model	Wristpin Diameter	Piston Clearance, Inch (13)	Ring End Gap, In. (Minimum)		Crank Pin Diameter, Inch	Rod Bearing Clearance, In.	Main Bearing Journal Diameter, In.	Main Bearing Clearance, Inch	Thrust On Bearing No.	Shaft End Play
				Comp.	Oil						
1952–54	228	.990	.0035 (1)	.008	.009	2.311–2.312	.0006–.0026	(2)	.0007–.0033	3	.003–.008
1952–55	248	.990	.0035 (1)	.008	.009	2.311–2.312	.0006–.0026	(2)	.0007–.0033	3	.003–.008
1952–62	270	1.052	.0035 (1)	(3)	.008	2.311–2.312	.0004–.0025	(2)	.0007–.0033	3	.003–.008
1955	288	.980	.0015 (4)	(5)	.015	2.2488–2.2498	.0009–.0029	2.498–2.499	(6)	4	.003–.008
1952–59	302	1.052	.0035 (1)	.008	.008	2.311–2.312	.0006–.0026	(2)	.0008–.0033	3	.003–.008
1956	316	.980	.0015 (4)	(5)	.013	2.2488–2.2498	.0009–.0029	2.498–2.499	(6)	4	.003–.008
1952–53	318	1.124	.004 (1)	.013	.011	2.374–2.375	.0022–.0037	2.749–2.750	.001–.003	3	.003–.008
1955–56	324	.980	.0015 (8)	.010	.010	2.2488–2.2498	.0009–.0029	(9)	(10)	5	.003–.008
1958–59	336	.980	.001–.002	.010	.013	2.2488–2.2498	.0009–.0030	2.623–2.624	.0005–.003	3	.003–.008
1957	347	.980	.001–.002	.013	.015	2.2488–2.2498	.0009–.0030	2.624–2.623	.0005–.0030	4	.003–.008
1952–55	360	1.124	.004 (1)	.014	.012	2.374–2.375	.0022–.0037	2.749–2.750	.001–.003	3	.003–.008
1957–59	370	.980	.001–.002	.013	.015	2.2492–2.2502	.0005–.0026	2.748–2.749	(14)	3	.003–.008
1952–55	426	1.249	.004 (1)	.015	.013	2.624–2.625	.0022–.0037	2.999–3.000	.001–.003	3	.003–.008
1952–59	503	1.249	.005 (1)	.016	.014	2.624–2.625	.0022–.0037	2.999–3.000	.001–.003	3	.003–.008
1960–63	305-V6	1.240	.003	.017	.015	2.8107–2.8117	.0015–.004	3.123–3.124 (7)	.002–.005 (11)	3	.003–.008
1960–63	351-V6	1.240	.003	.017	.015	2.8107–2.8117	.0015–.004	3.123–3.124 (7)	.002–.005 (11)	3	.003–.008
1960–63	401-V6	1.240	.003	.017	.015	2.8107–2.8117	.0015–.004	3.123–3.124 (7)	.002–.005 (11)	3	.003–.008
1962–63	478-V6	1.240	.003	.017	.015	2.8107–2.8117	.0015–.004	3.123–3.124 (7)	.002–.005 (11)	6	.003–.008
1960–63	702-V12	1.240	.003	.017	.015	2.8107–2.8117	.0015–.004	3.123–3.124 (7)	.002–.005 (11)	6	.003–.008

(1) 4 to 8 lbs. pull on spring scale.
(2) Front, 2.6835–2.6845″.
No. 2, 2.7145–2.7155″.
No. 3, 2.7455–2.7465″.
Rear, 2.7765–2.7775″.
(3) Top ring .013″, others .008″.
(4) 8 to 15 lbs. pull on spring scale.
(5) Top ring .010″, 2nd ring .008″.
(6) Rear bearing .0008–.0033″, others .0005–.003″.
(7) Rear journal 3.1225–3.1235″.
(8) 10 to 18 lbs. pull on spring scale.
(9) Rear bearing 2.623–2.624″, others 2.498–2.499″.
(10) Rear bearing .002–.0035″, others .0005–.003″.
(11) Rear .0025–.0055″.
(13) Pistons removed from above.
(14) Rear bearing .001–.0036″ others .0005–.003″.

TUNE UP & VALVE SPECIFICATIONS

Year	Engine Model	Firing Order	Spark Plugs		Ignition Timing		Valve Seat Angle, Degrees	Valve Clearance H-Hot. C-Cold		Valve Spring Installed Height
			Type⑬	Gap	Timing Mark	Location		Intake	Exhaust	
1952	228	153624	C44	.030	Ball	Flywheel	30	.012H	.020H	1 13/16
1953–54	228	153624	C44	.030	Ball	Flywheel	30	.012H	.020H	1 13/16
1952	248	153624	C44	.030	Ball	Flywheel	30	.012H	.020H	1 13/16
1953–54	248	153624	C44	.030	Ball	Flywheel	30	.012H	.020H	1 13/16
1955	248	153624	C44	.030	Ball	Flywheel	30	.012H	.020H	1 13/16
1952	270	153624	C44	.030	Ball	Flywheel	30	.012H	.020H	1 13/16
1953–54	270	153624	C44	.030	Ball	Flywheel	30	.012H	.020H	1 13/16
1955–62	270	153624	C44	.030	Ball	Flywheel	30	.012H	.020H	1 13/16
1955	288	18436572④	C44	.035	Mark	Balancer	②	Zero	Zero	1 17/32
1952–54	302	153624	C44	.030	Ball	Flywheel	②	.012H	.020H	1 13/16
1955–59	302	153624	C44	.030	Ball	Flywheel	②	.012H	.020H	1 13/16
1956	316	18436572④	⑪	.035	5° Mark	Vib. Damp.	②	Zero	Zero	1 31/64
1952–53	318	142635	C44	.030	6° Mark	Flywheel	②	.012H	.018H	....
1955	324	18736542④	C44	.030	Mark	Balancer	45	Zero	Zero	1 53/64
1956	324	18436572④	C44	.030	5° Mark	Vib. Damp.	45	Zero	Zero	1 53/64
1958–59	336	18436572④	C44	.030	6° Mark	Damper	②	Zero	Zero	1 15/32
1957	347	18436572④	⑫	.030	⑥	Damper	②	Zero	Zero	1 33/64
1952–53	360	142635	C44	.030	6° Mark	Flywheel	②	.012H	.018H	....
1954–55	360	142635	C44	.030	6° Mark	Flywheel	②	.012H	.020H	....
1957–59	370	18736542④	C44	.030	⑦	Damper	45	Zero	Zero	1 7/8
1952–53	426	142635	C44	.030	2° Mark	Flywheel	②	.012H	.018H	....
1954–55	426	142635	C44	.030	6° Mark	Flywheel	②	.012H	.020H	....
1952–53	503	142635	C44	.030	2° Mark	Flywheel	②	.012H	.018H	1 7/8
1954–55	503	142635	C44	.030	6° Mark	Flywheel	②	.012H	.020H	1 7/8
1956	503	142635	C44	.030	6° Mark	Flywheel	②	.012H	.020H	1 7/8
1957–59	503	142635	C44	.030	6° Mark	Flywheel	②	.012H	.018H	1 7/8
1960–63	305-V6	165432⑨	C44S	.030	7½° BTDC	Damper	②	.012H	.018H	1 59/64
1960–63	351-V6	165432⑨	C44	.030	5° BTDC	Damper	②	.012H	.018H	1 59/64
1960–63	401-V6	165432⑨	C44	.030	5° BTDC	Damper	②	.012H	.018H	1 59/64
1962–63	478-V6	165432⑨	C44	.030	5° BTDC	Damper	②	.012H	.018H	1 59/64
1960–63	702-V12	⑩	C44	.030	5° BTDC	Damper	②	Zero	Zero	1 59/64

① Models 100 to 300 .030″, models 350 and up .035″.
② Intake 30°, exhaust 45°.
③ With single spring 150 @ 1 13/32″. With dual springs: Inner 50 @ 1 5/32″, outer 135 @ 1 13/32″.
④ Cylinder numbering (front to rear): Left bank 1–3–5–7, right bank 2–4–6–8.
⑤ Inner spring 57 @ 1 5/32″, outer spring 102 @ 1 1/5″.
⑥ Midway between marks on damper.
⑦ On trailing edge of notch on damper.
⑧ Inner spring 95–100 Lbs. @ 1.065. Outer Spring 117–127 Lbs. 1.146.
⑨ Cylinder numbering (front to rear): Left bank 1–3–5, right bank 2–4–6.
⑩ Cylinder numbering (front to rear): Left bank 1–3–5–7–9–11, right bank 2–4–6–8–10–12. Firing order, 1–4–9–8–5–2–11–10–3–6–7–12.
⑪—Series 100 to 300, C46; series 350 to 450, C44.
⑫—Series 100 to 300, C45; series 350 to 450, C44.
⑬—AC. Normal service.

ENGINE TIGHTENING SPECIFICATIONS★

★Torque specifications are for clean and lightly lubricated threads only. Dry or dirty threads produce increased friction which prevents accurate measurement of tightness.

Engine	Spark Plugs Ft. Lbs.	Cylinder Head Bolts Ft. Lbs.	Intake Manifold Ft. Lbs.	Exhaust Manifold Ft. Lbs.	Rocker Arm Shaft Bracket Ft. Lbs.	Rocker Arm Cover Ft. Lbs.	Connecting Rod Cap Bolts Ft. Lbs.	Main Bearing Cap Bolts Ft. Lbs.	Flywheel to Crankshaft Ft. Lbs.	Vibration Damper or Pulley Ft. Lbs.
6-228	20–25	90–100	②	②	20–25	....	40–45	90–100	①	③
6-248	20–25	90–100	②	②	20–25	....	40–45	90–100	50–65	③
6-270	20–25	90–100	②	②	20–25	....	40–45	90–100	102–107	115–125
V8-288	15–20	90–95	45	30	None	....	45	⑤	95	....
6-302	15–20	90–100	②	②	20–25	....	40–45	90–100	102–107	③
V6-305	22–27	65–72	20–25	15–20	20–25	....	65–75	135–145⑧	100–105	135–145
V8-316	15–20	90–95	45	30	None	....	45	⑤	105	....
V8-324	25	65–70	22–26	22–26	14–17	....	40–50	⑥	85–95	45–50
V8-336	23–27	90–95	45	....	....	....	45	⑤	85–100	160
V8-347	15–20	90–95	45	30	None	....	45	⑤	85–100	160
V6-351	22–27	65–72	20–25	15–20	20–25	....	65–75	135–145⑧	100–105	135–145
6-360	15–20	80–90	....	....	....	....	65–75	90–100	80–90	④
V8-370	23–27	65–70	25–35	22–26	14–17	....	40–50	⑥	85–95	45–50
V6-401	23–27	65–72	20–25	15–20	20–25	....	65–75	135–145⑧	100–105	135–145
6-426	23–27	80-90	....	....	....	....	80	90–100	115–125	④
V6-478	23–27	65–72	20–25	15–20	20–25	....	65–75	135–145⑧	100–105	135–145
6-503	23–27	⑦	....	....	....	....	80	90–100	115–125	④
V12-702	23–27	65–72	20–25	15–20	20–25	....	65–75	135–145⑧	100–105	135–145

① With standard trans. 50–65, with Hydramatic 102–107.
② Center nuts 15–20, end nuts 25–30.
③ Pressed on.
④ Straight hub type 120–130, tapered cone type 235–250.
⑤ Rear 140, all others 100.
⑥ Rear 120, all others 95.
⑦ 1954–56 models 80–90, all others 75–80.
⑧ Rear (7/16″) 85–95.

GENERATOR & REGULATOR SPECIFICATIONS

★To polarize generator, connect jumper wire from "hot" side of battery to armature terminal of generator.

Generator						Regulator					
							Cutout Relay				
Gen. No. ①	Ground Polarity	Brush Spring Tension, Oz.	Rated Cap. Amps.	Gen. Field Ground Location★	Field Current	Reg. No. ②	Closing Voltage	Arm. Air Gap, In.	Voltage Setting	Current Setting	Current & Voltage Reg. Arm. Air Gap, In.
1100013	Positive	28	35	External	1.85–2.03④	1118731	6.4	.020	7.4	38	.075
1100018	Positive	28	45	External	1.87–2.0④	1118828	6.4	.020	7.3	47	.075
1100304	Positive	28	25	External	1.5–1.62⑤	1118896	12.8	.020	14.3	25	.075
1100304	Negative	28	25	External	1.5–1.62⑤	1119000	12.6	.020	14.3	25	.075
1100326	Negative	28	25	External	1.5–1.62⑤	1119000	12.6	.020	14.3	25	.075
1100336	Negative	28	25	External	1.5–1.62⑤	1119000	12.8	.020	14.4	25	.075
1102020	Negative	28	30	External	1.48–1.62⑤	1119001	12.6	.020	14.3	30	.075
1102040	Negative	28	30	External	1.48–1.62⑤	1119001	12.6	.020	14.3	30	.075
1102107	Negative	28	30	External	1.69–1.79⑤	1119001	12.6	.020	14.3	30	.075
1102107	Negative	28	30	External	1.69–1.79⑤	1119003	12.6	.020	14.3	30	.075
1102113	Negative	28	30	External	1.69–1.79	1119001	12.6	.020	14.3	30	.075
1102158	Negative	28	30	External	1.69–1.79	1119001	12.6	.020	14.3	30	.075
1102158	Negative	28	30	External	1.69–1.79	1119001	12.6	.020	14.3	30	.075
1102176	Negative	28	35	External	1.69–1.79	1119002	12.6	.020	14.3	35	.075
1102177	Negative	28	35	External	1.69–1.79	1119002	12.6	.020	14.3	35	.075
1102710	Positive	28	30	External	1.75–1.95	1118303	6.4	.020	7.3	30	.075
1102716	Positive	28	30	External	1.75–1.95	1118303	6.4	.020	7.3	30	.075
1102746	Positive	28	40	External	1.87–2.0	1118382	6.4	.020	7.2	42	.075
1102749	Positive	28	30	External	1.75–1.95	1118303	6.4	.020	7.3	30	.075
1102761	Positive	28	30	External	1.75–1.95	1118303	6.4	.020	7.3	30	.075

GENERATOR & REGULATOR SPECIFICATIONS continued

★To polarize generator, connect jumper wire from "hot" side of battery to armature terminal of generator.

Generator						Regulator					
							Cutout Relay				
Gen. No. ①	Ground Polarity	Brush Spring Tension, Oz.	Rated Cap. Amps.	Gen. Field Ground Location★	Field Current	Reg. No. ②	Closing Voltage	Arm. Air Gap, In.	Voltage Setting	Current Setting	Current & Voltage Reg. Arm. Air Gap, In.
1102788	Positive	28	45	External	1.87–2.0	1118828	6.4	.020	7.3	47	.075
1102793	Positive	28	45	External	1.87–2.0	1118828	6.4	.020	7.3	47	.075
1102818	Positive	28	45	External	1.87–2.0	1118828	6.3	.020	7.1	44	.075
1105003	Positive	28	40	External	1.77–1.93	1118393	6.4	.020	7.2	42	.075
1105009	Positive	28	40	External	1.77–1.93	1118830	6.4	.020	7.3	42	.075
1105010	Positive	28	40	External	1.77–1.93	1118830	6.4	.020	7.3	42	.075
1105127	Negative	28	35	External	2.73–3.00	1119604	12.6	.020	14.3	35	.075
1105946	Positive	28	25	External	1.54–1.67	1118896	12.6	.020	14.3	25	.075
1105946	Negative	28	25	External	1.54–1.67	1119000	12.6	.020	14.3	25	.075
1106751	Positive	20	50	External	1.70–1.95	1118335	6.4	.020	7.2	50	.075
1106752	Negative	20	40	External	③	1118334	6.4	.020	7.2	50	.075
1106757	Positive	20	50	External	1.70–1.95	1118832	6.4	.020	7.3	55	.075
1106758	Positive	20	40	External	③	1118838	12.8	.020	14.5	50	.075
1106801	Positive	20	40	External	1.37–1.50	1118338	12.8	.020	14.3	40	.075
1106802	Positive	20	50	External	1.37–1.50	1118339	12.8	.020	14.3	50	.075
1106811	Positive	20	50	External	1.37–1.50	1118339	12.8	.020	14.3	50	.075
1106818	Positive	20	50	External	1.37–1.50	1118838	12.8	.020	14.5	50	.075
1106818	Negative	28	50	External	1.37–1.50	1119156	12.8	.020	14.1	50	.075
1106821	Positive	20	40	External	1.37–1.50	1118338	12.8	.020	14.3	40	.075
1106821	Negative	20	40	External	1.37–1.50	1119004	12.2	.020	13.9	39	④
1106821	Negative	20	40	External	1.37–1.50	1118887	12.8	.020	14.4	40	.075
1106822	Negative	20	50	External	1.37–1.50	1119156	12.8	.020	14.3	50	.075
1106822	Negative	20	50	External	1.37–1.50	1119156	12.6	.020	14.1	50	.075
1106830	Positive	20	50	External	1.37–1.50	1118838	12.8	.020	14.5	50	.075
1106904	Positive	20	50	External	1.37–1.50	1118838	12.8	.020	14.5	50	.075
1106904	Negative	20	50	External	1.37–1.50	1119156	12.8	.020	14.1	50	.075
1106927	Negative	20	50	External	1.37–1.5	1119156	12.8	.020	14.1	50	.075
1106928	Negative	20	50	External	1.37–1.5	1119156	12.8	.020	14.1	50	.075
1106931	Negative	20	50	External	1.37–1.5	1119156	12.8	.020	14.1	50	.075
1106982	Negative	28	40	External	1.37–1.50	1119004	12.3	.020	14.0	40	.075
1106986	Negative	20	50	External	2.18	1119606	12.8	.020	14.3	50	⑤

① Stamped on plate riveted to housing.
② Stamped on regulator base.
③ Main field 1.70–1.95 amps @ 6 volts; reverse field .73–.83 amps @ 6 volts.
④ Voltage regulator air gap .063″. Current regulator air gap .075″.
⑤ Current regulator air gap .075″, voltage regulator air gap .080″.

STARTING MOTOR SPECIFICATIONS

Unit Part No. ①	Rotation ②	Brush Spring Tension, Ounces	No Load Test			Torque Test		
			Amperes	Volts	R.P.M.	Amperes	Volts	Torque, Lbs. Ft.
1107009	C	24–28	65	5.67	5000	525	3.37	12
1107051	C	24–28	65	5.67	5000	525	3.37	12
1107055	C	24–28	65	5.67	5000	525	3.37	12
1107071	C	24–28	65	5.67	5000	525	3.37	12
1107075	C	24–28	70	5.65	5500	550	3.25	11
1107076	C	24–28	70	5.65	5500	550	3.25	11
1107102	C	24–28	65	5.67	5000	525	3.37	12
1107108	C	24–28	70	5.65	5500	550	3.25	11
1107109	C	24–28	70	5.65	5500	550	3.25	11
1107135	C	24–28	70	5.65	5500	550	3.25	11
1107418	C	24–28	65	5.0	6000	570	3.15	15
1107631	C	35 Min.	95	10.1	3500	470	5.4	10.5
1107639	C	24 Min.	65	11.35	6000	450	7.5	15
1107655	C	35 Min.	95	10.1	3500	470	5.4	10.5
1107681	C	35	100	10.6	5100	360	3.5	③
1107683	C	24	100	10.6	3600	360	3.5	③
1107690	C	24–28	80	5.67	5500	600	3.0	14
1107750	C	35	90	10.3	3800	435	5.8	7.0
1107751	C	35 Min.	65	10.6	3600–5100	300–360	3.5	
1107752	C	35 Min.	65	10.6	3600–5100	300–360	3.5	
1107843	C	24 Min.	65	11.35	6000	450	7.5	15
1107906	C	24–28	65	5.0	5500	600	3.0	16
1107936	C	24–28	65	5.0	5500	600	3.0	16
1107960	C	24–28	60	5.0	6000	600	3.0	15
1108001	C	24–28	70	5.65	5500	570	3.15	12
1108040	C	24 Min.	80	5.67	5500	600	3.0	14
1108104	C	24–28	70	11.3	6000	530	6.7	16
1108123	C	24–28	70	11.3	6000	530	6.7	16
1108128	C	24–28	70	11.3	6000	530	6.7	16
1108151	C	24–28	70	11.3	6000	530	6.7	16
1108164	C	24 Min.	70	11.3	6000	530	6.7	16
1108451	C	24–28	70	5.0	2500	600	3.0	28
1108456	C	24–28	70	5.0	2500	600	3.0	28
1108458	C	24–28	70	5.0	2500	600	3.0	28
1108465	C	24 Min.	70	5.0	2500	600	3.0	28
1108466	C	24 Min.	70	5.0	2500	600	3.0	28
1108531	C	24–28	70	10.0	2800	530	6.7	33
1108532	C	24–28	70	10.0	2800	530	6.7	33
1108534	C	24–28	70	10.0	2800	530	6.7	33
1108539	C	24–28	70	10.0	2800	530	6.7	33
1108545	C	24	70	10.0	2800	530	6.7	33
1108547	C	24	70	10.0	2800	530	6.7	33
1108676	C	24–28	65	11.35	6000	450	7.5	15
1108704	C	36–40	115	11.6	7000	570	2.3	20
1108816	C	36–40	115	11.6	7000	570	2.3	20
1108835	C	36–40	115	11.6	7000	570	2.3	20
1109802	C	36–40	115	11.6	7000	570	2.3	20
1109810	C	36–40	115	11.6	7000	570	2.3	20
1113114	C	80	57–70	11.5	5000–7400	500	3.3	22
1114011	C	36–40	115	11.6	7000	570	2.3	20
1114021	C	36–40	115	11.6	7000	570	2.3	20

① Stamped on plate riveted to housing.
② As viewed from drive end: C—Clockwise.
③ Armature locked.

DISTRIBUTOR SPECIFICATIONS

Unit Part No. ①	Rotation ②	Cam Angle, Degrees	Breaker Gap, In.	Condenser Capacity, Mfds.	Breaker Arm Spring Tension, Oz. ③	Centrifugal Advance Data Degrees @ R.P.M. of Dist.		Vacuum Advance Data		
						Advance Starts	Full Advance	Inches of Vacuum to Start Plunger Movement	Inches of Vacuum for Full Plunger Travel	Maximum Vacuum Advance, Dist. Degrees
1110248	C	31	.016	.18–.23	19–23	1 @ 400	15 @ 1875	4–6	14¾	10
1110250	C	31	.020	.18–.23	19–23	1 @ 400	15 @ 1800	None	None	None
1110262	C	31	.016	.18–.23	19–23	1 @ 400	15 @ 1875	4–6	14¾	10
1110263	C	31	.020	.18–.23	19–23	1 @ 400	13 @ 1800	None	None	None
1110277	C	31	.016	.18–.23	19–23	1 @ 350	13 @ 1800	None	None	None
1110279	C	31	.016	.18–.23	19–23	1 @ 400	13 @ 1800	None	None	None
1110828	CC	26–33	.016	.20–.25	17–21	1 @ 325	15 @ 1700	5	13	8
1110862	CC	26–33	.016	.18–.23	17–21	1 @ 525	10 @ 1800	4–6	12½–13½	8
1110871	CC	30	④	.18–.23	17–21	1 @ 400	13 @ 2125	7	15	11
1112296	C	31–37	.022	.20–.25	17–21	1 @ 325	13 @ 1400	None	None	None
1112307	C	31–37	.022	.20–.25	17–21	1 @ 325	13 @ 1400	None	None	None
1112320	C	31–37	.022	.20–.25	17–21	1 @ 325	13 @ 1400	None	None	None
1112326	C	31–37	.022	.20–.25	17–21	1 @ 325	13 @ 1400	None	None	None
1112327	C	31–37	.022	.20–.25	17–21	1 @ 325	13 @ 1400	None	None	None
1112345	C	28–35	.016	.18–.23	17–21	1 @ 352	11 @ 1200	None	None	None
1112347	CC	29–31	.016	.18–.23	17–21	1 @ 400	12 @ 2000	None	None	None
1112360	C	31–37	.022	.20–.25	17–21	1 @ 275	15 @ 1300	7.75	18.5	10
1112362	C	31–37	.022	.20–.25	17–21	1 @ 375	18 @ 1700	7.75	18.5	10
1112372	C	31–37	.022	.20–.25	17–21	1 @ 375	12 @ 1000	None	None	None
1112385	C	31–37	.022	.20–.25	17–21	1 @ 375	18 @ 1700	7.75	18.5	10
1112386	C	31–37	.022	.20–.25	17–21	1 @ 375	12 @ 1000	None	None	None
1112390	C	38–45	.016	.20–.25	17–21	1 @ 375	11 @ 1475	7.75	18.5	10
1112391	C	38–45	.016	.20–.25	17–21	1 @ 450	13 @ 1600	None	None	None
1112400	C	38–45	.016	.20–.25	17–21	1 @ 450	13 @ 1600	None	None	None
1112411	C	38–45	.016	.20–.25	17–21	1 @ 450	13 @ 1600	7–8½	18½	10
1112414	C	28–35	.016	.18–.23	17–21	1 @ 450	13 @ 1600	7–8½	18½	10
1112708	C	28–35	.016	.18–.23	17–21	1 @ 350	8 @ 1075	None	None	None
1112716	C	28–35	.016	.18–.23	17–21	1 @ 350	8 @ 1075	None	None	None

① Stamped on plate riveted to housing.
② As viewed from top: C—Clockwise. CC—Counterclockwise. ③ Measured from center of contact.
④ Turn adjusting screw clockwise until engine misfires, then turn screw ½ turn in opposite direction.

WHEEL ALIGNMENT SPECIFICATIONS

Truck Series	Year	Caster, Deg.	Camber, Deg.	Toe-In, Inch	Kingpin Inclination, Deg.
100	1952–56	2	1½	1/16–3/16	7⅙
100	1957–59	½–1½	1½	1/16–3/16	7⅙
100–8	1955–56	2	1½	1/16–3/16	7⅙
100–8	1957–59	½–1½	1½	1/16–3/16	7⅙
PM150	1955–56	2½	1½	1/16–¼	7⅙
PM150	1957–59	½–1½	1½	1/16–¼	7⅙
150	1952–54	2½	1½	1/16–3/16	7⅙
150	1955–56	2½	1½	1/16–¼	7⅙
150	1957–59	½–1½	1½	1/16–¼	7⅙
150–8	1955–56	2½	1½	1/16–¼	7⅙
150–8	1957–59	½–1½	1½	1/16–¼	7⅙
PM250	1955–56	2½	1½	1/16–¼	7⅙
PM250	1957–59	½–1½	1½	1/16–¼	7⅙
250	1952–56	2½	1½	1/16–¼	7⅙
250	1957–59	½–1½	1½	1/16–¼	7⅙
250–8	1955–56	2½	1½	1/16–¼	7⅙
250–8	1957–59	½–1½	1½	1/16–¼	7⅙
280	1952–53	2½	1½	1/16–¼	7⅙
300	1952–56	3	1½	1/16–¼	7⅙
300	1957–59	½–1½	1½	1/16–¼	7⅙
300–8	1955–56	3	1½	1/16–¼	7⅙
M300	1955–56	3	1½	1/16–¼	7⅙
M300–8	1955–56	3	1½	1/16–¼	7⅙
S300	1955–56	3	1½	1/16–¼	7⅙
S300	1957–59	½–1½	1½	1/16–¼	7⅙
S300–8	1955–56	3	1½	1/16–¼	7⅙
340	1955	3	1½	1/16–¼	7⅙
FM340	1955	3	1½	1/16–¼	7⅙
FM340–8	1955	3	1½	1/16–¼	7⅙
M340	1955	3	1½	1/16–¼	7⅙
M340–8	1955	3	1½	1/16–¼	7⅙
350	1955–56	3	1½	1/16–¼	7⅙
350	1957–59	½–1½	1½	1/16–¼	7⅙
350–8	1955–56	3	1½	1/16–¼	7⅙
F350	1955	3	1½	1/16–¼	7⅙
F350	1956	1½	1½	1/16–¼	7⅙
F350	1957–59	½–1½	1½	1/16–¼	7⅙
F350–8	1955	3	1½	1/16–¼	7⅙
F350–8	1956	1½	1½	1/16–¼	7⅙
F350–8	1957–59	½–1½	1½	1/16–¼	7⅙
FM350	1955	3	1½	1/16–¼	7⅙
FM350–8	1955	3	1½	1/16–¼	7⅙
M350	1955	3	1½	1/16–¼	7⅙
M350–8	1955	3	1½	1/16–¼	7⅙
370	1955–56	3	1½	1/16–¼	7⅙
370	1957–59	½–1½	1½	1/16–¼	7⅙
370–8	1955–56	3	1½	1/16–¼	7⅙
370–8	1957–59	½–1½	1½	1/16–¼	7⅙
F370	1955–56	3	1½	1/16–¼	7⅙
F370	1957–59	½–1½	1½	1/16–¼	7⅙
F370–8	1955–56	3	1½	1/16–¼	7⅙
F370–8	1957–59	½–1½	1½	1/16–¼	7⅙
FM370	1955	3	1½	1/16–¼	7⅙
FM370–8	1955	3	1½	1/16–¼	7⅙
S370	1955–56	3	1½	1/16–¼	7⅙
S370	1957–59	½–1½	1½	1/16–¼	7⅙
S370–8	1955–56	3	1½	1/16–¼	7⅙
S370–8	1957–59	½–1½	1½	1/16–¼	7⅙
SM370	1955	3	1½	1/16–¼	7⅙
SM370–8	1955	3	1½	1/16–¼	7⅙
400	1952–55	1½	1½	1/16–¼	7⅙
400–8	1955	1½	1½	1/16–¼	7⅙
M400	1955	1½	1½	1/16–¼	7⅙
M400–8	1955	1½	1½	1/16–¼	7⅙
410	1955	1½	1	⅛–3/16	7⅙
410–8	1955	1½	1½	1/16–¼	5
F410	1955	1½	1½	1/64–¼	5
F410–8	1955	1½	1½	1/64–¼	5
FM410	1955	1½	1½	1/64–¼	5
FM410–8	1955	1½	1½	1/64–¼	5
M410	1955	1½	1½	1/64–¼	5
M410–8	1955	1½	1½	1/64–¼	5
450	1955	3	1	⅛–3/16	7⅙
450	1956	3	1½	⅛–3/16	5
450	1957–59	½–1½	1	1/16–3/16	5
450–8	1956	3	1½	⅛–3/16	5
450–8	1957–59	½–1½	1	1/16–3/16	5
F450	1955	3	1	⅛–3/16	5
F450	1956	3	1½	⅛–3/16	5
F450	1957–59	½–1½	1	1/16–3/16	5
F450–8	1956	3	1½	⅛–3/16	5
F450–8	1957–59	½–1½	1	1/16–3/16	5
FM450	1955	3	1	⅛–3/16	5
M450	1955	3	1	⅛–3/16	5
S450	1955	3	1	⅛–3/16	5
S450	1956	3	1½	⅛–3/16	5
S450	1957–59	½–1½	1½	1/16–3/16	5
SM450	1955	3	1	⅛–3/16	5
450–30	1952–54	1¾	1	⅛–7/32	5
F450–30	1952–54	2½	1	⅛–7/32	4
M450–30	1954	1¾	1	⅛–7/32	7⅙
W450–30	1952–54	1¾	1	⅛–7/32	5
450–37	1952–54	2½	1	⅛–⅜	4
SFM460	1957–59	½–1½	1	1/16–3/16	5½
470	1952–55	2½	1	⅛–⅜	4
500	1955	2½	1	⅛–3/16	5
F500	1955	3	1	⅛–3/16	5
FM500	1955	3	1	⅛–3/16	5
M500	1955	3	1	⅛–3/16	5
MW500	1955	3	1	⅛–3/16	5
MW500	1956	3	1½	⅛–3/16	5
MW500	1957–59	½–1½	1	1/16–3/16	5
W500	1956	3	1½	⅛–3/16	5
W500	1957–59	½–1½	1½	1/16–3/16	5
W500	1955	2½	1	1/16–⅛	5
550	1955–56	2½	1	⅛–¼	5
550	1957–59	1	1	⅛–¼	5½
F550	1956	2	1	⅛–¼	5½
F550	1957–59	1	1	⅛–¼	5
FA550	1957–59	1	1	⅛–¼	5
FW550	1956	1½	1	⅛–¼	5½
FW550	1957–59	1	1	⅛–¼	5 (2)
W550	1956	2	1	⅛–¼	5½
W550	1957–59	1	1	⅛–¼	5 (1)

WHEEL ALIGNMENT SPECIFICATIONS continued

Truck Series	Year	Caster, Deg.	Camber, Deg.	Toe-In, Inch	Kingpin Inclination, Deg.
600	1956	2½	1	⅛–¼	5½
600	1957–59	1	1	⅛–¼	5
A600	1957–59	1	1	⅛–¼	5
600	1952–55	2½	¾	⅛–¼	4
F600	1956	2	1	⅛–¼	5½
F600	1957–59	1	1	⅛–¼	5①
FA600	1957–59	1	1	⅛–¼	5
620	1952–54	1	1	⅛–¼	4
620	1955	2½	¾	⅛–¼	4
630–42	1952–54	1	1	⅛–¼	4
630–42	1955–56	2½	1	⅛–¼	5½
630	1957–59	1	1	⅛–¼	5
D630	1957–59	1	1	⅛–¼	5
F630	1956	2	1	⅛–¼	5½
F630	1957–59	2½	1	⅛–¼	5½
F630–42	1952–54	1	1	⅛–¼	5½
F630–42	1955	2½	¾	⅛–¼	5½
D630–47	1952–54	1	1	⅛–¼	4
D630–47	1955	2½	¾	⅛–¼	5
DW630–47	1952–54	1	1	⅛–¼	5½
W630	1957–59	1	1	⅛–¼	5①
630–50	1952–54	1	1	⅛–¼	4
630–50	1955	2½	¾	⅛–¼	5
W630–50	1952–54	1	1	⅛–¼	5½
W630–50	1955	2½	¾	⅛–¼	5½
650	1952–55	2½	¾	⅛–¼	4
D660–47	1952–54	1	1	⅛–¼	4
D660–47	1955	2½	¾	⅛–¼	5
DF660–47	1952–54	1	1	⅛–¼	5½
DF660–47	1955	2½	¾	⅛–¼	5½
660–50	1952–54	1	1	⅛–¼	4
660–50	1955	2½	¾	⅛–¼	5
660	1956	2½	1	⅛–¼	
660	1957–59	1	1	⅛–¼	5①
D660	1957–59	1	1	⅛–¼	5
DF660	1957–59	2½	1	⅛–¼	5½
F660	1956	2	1	⅛–¼	5½
F660	1957–59	2½	1	⅛–¼	5½
F660–50	1952–54	1	1	⅛–¼	5½
F660–50	1955	2½	¾	⅛–¼	5½
W660	1957–59	1	1	⅛–¼	5½
DW660	1957–59	1	1	⅛–¼	5½
FW660	1957–59	2½	1	⅛–¼	5½
670–50	1952–54	1	1	⅛–¼	5½
670–50	1955	2½	¾	⅛–¼	5½
W670	1956	2	1	⅛–¼	5½
W670	1957–59	1	1	⅛–¼	5½②
FRA800	1957	2½	1	⅛–¼	5½
RA800	1957–59	1	1	⅛–¼	5③
DRA800	1957–59	1	1	⅛–¼	5③
FRA800	1957–59	2½	1	⅛–¼	5③
DFRA800	1957–59	2½	1	⅛–¼	5③
DFRA860	1957–59	2½	1	⅛–¼	5③
DFRWA860	1957–59	2½	1	⅛–¼	5½
DF860	1957–59	2½	1	⅛–¼	5½
D930	1957–59	1	1	⅛–¼	5½
DW950	1957–59	1	1	⅛–¼	5½
DFW950	1957–59	2½	1	⅛–¼	5½
DW970	1957–59	1	1	⅛–¼	5½
820	1955	2½	¾	⅛–¼	5½
860	1955–56	2½	¾	⅛–¼	5½
920	1955–56	2½	¾	⅛–¼	5½
930	1955	2½	¾	⅛–¼	5½
950	1955–56	2½	¾	⅛–¼	5½
970	1955–56	2½	¾	⅛–¼	5½
1000 to 3000④	1960–63	1	½	5/32–¼	8½
3500 to 5500④	1960–63	2½	¾	⅛–¼	8
K1000, K1500	1960–63	1½	1½	1/16–3/16	7⅙
P1500, P2500	1960–63	2	1½	¼–5/16	7⅙
5000 and up⑤	1960–63	2	1	⅛–¼	. . .
Jr. Van	1962–63	1½	1½	1/16–3/16	7⅙

① With Timken FE900 axle, 5½°.
② With Timken 27465 axle, 8°.
③ With 11,000 lb. front axle 5½°.
④ With torsion bar suspension.
⑤ With leaf springs.

Gasoline Engine Section

CYLINDER HEAD, REPLACE

In Line Six-Cyl. Engines

Cylinder head bolts should be tightened down in the order shown in Figs. 1 and 2 with a torque wrench. Uniform tightening of head bolts is essential in securing proper gasket seal. Over-tightening may cause distorted block or head, and in extreme instances block and head may crack, bolts may break or threads strip.

Irregular or under-tightening usually results in water leaks or blown gaskets, or other damage may result from the pressure of water in the combustion chamber.

Tighten the bolts in proper sequence when the engine is cold. Then run the engine until the head is at normal operating temperature and give the bolts a final tightening to the torque load given in the *Engine Tightening* table.

V6 and V12 Engines

After installing cylinder head, run engine until normal operating temperature is reached. Then tighten cylinder head bolts in the sequence shown in Fig. 3 to the torque given in the *Engine Tightening* table. After head is properly tightened, adjust valve lash to the recommended clearance on V6 engines.

V8-288, 316, 336, & 347

1. Drain cooling system.
2. Remove air cleaner.
3. Remove radiator hose or leave it attached to water outlet and disconnect outlet from manifold and move it out of the way.
4. Disconnect heater hose from fitting, remove nut retaining hose bracket to manifold and move hose and bracket out of the way.
5. Disconnect wires from generator and remove wire harness from clip on generator end plate.
6. Remove screws retaining generator mounting bracket to manifold.
7. Remove bolt retaining generator adjusting strap and take off generator.
8. On vehicles with power steering, remove screws retaining power steering pump to timing chain cover. Lay pump, with hoses attached, on left fender skirt *but first disconnect battery ground strap to prevent pump from grounding "BAT" terminal of regulator.*
9. Remove fuel pump-to-filter pipe.
10. Unfasten vacuum pipe clip from left cylinder head.
11. Remove vacuum pipe connecting vacuum pump to carburetor. *On vehicles with power brakes, remove vacuum pipe connecting carburetor to power brake hose.*
12. Disconnect wires from coil.
13. Disconnect right cylinder head spark plug wires and wire support and distributor primary wire. Remove distributor cap and lay cap and wires on left side of engine.
14. Remove distributor-to-carburetor vacuum pipe.
15. Disconnect throttle rod from carburetor.
16. Remove screws retaining throttle control engine bracket assembly to manifold (Hydra-Matic models) and tie the bracket and throttle rod against firewall.
17. Remove thermogauge engine unit.
18. Remove intake manifold retaining screws and nuts and take off manifold and gaskets.
19. Remove push rod cover.
20. Remove rocker arm cover. *On left bank remove spark plug wires and wire support.*
21. Remove battery ground strap from left head or engine ground strap from right head.
22. Remove Hydra-Matic oil level indicator tube bracket and engine oil level indicator and tube from right head.
23. Loosen all rocker arm adjusting nuts and move rocker arms off push rods.
24. Remove push rods and place in a suitable stand so they can be replaced in exact position from which they were removed.
25. Remove screws attaching exhaust crossover pipe to manifold.
26. Remove screws from cylinder head water inlet fitting.
27. Remove cylinder head screws and remove head with exhaust manifold attached. *If left head is being removed, it will be necessary to raise head off dowel pins, move it forward and shift it in order to clear the defroster, power steering and power brake equipment.*

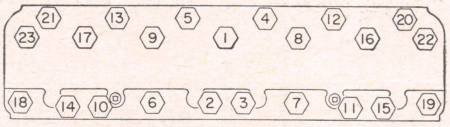

Fig. 2 Cylinder head tightening sequence. 318, 360, 426, 503 engines

Installation

Right and left heads are the same except for the location of the water passage plug in end of water passage. Therefore, only one head is provided for service replacement. New heads are complete with valve guides, rocker arm studs and all plugs except the one water passage plug.

When installing a new head, ream the valve guides and check the concentricity of valves seats. Transfer all serviceable parts to the new head, using new seals on the intake valve stems and new exhaust manifold gasket. Install new water passage plug using gasket cement, and install new intake manifold mounting studs.

Install the head in the reverse order of removal. The head screws are three different lengths. When inserted in the proper holes all screws will project an equal distance from the head. Do not use sealer of any kind on the threads. Tighten screws evenly to 90-95 lb. ft. torque.

Use four thin (.075") gaskets or two thick (.135") gaskets when installing the exhaust crossover pipe to the exhaust manifold.

V8-324 & 370 Engines

To remove either or both cylinder heads, proceed as follows:

1. Drain cooling system and disconnect upper radiator hose from water outlet.
2. Remove air cleaner and generator.
3. Remove spark plug wires.
4. Disconnect throttle linkage.
5. Disconnect spark plug wire and air cleaner supports from cylinder heads.
6. Remove distributor cap and lift cap and high tension wire assembly with supports from engine.
7. Remove fuel pump-to-carburetor fuel line and two vacuum lines from carburetor to fuel pump and distributor.

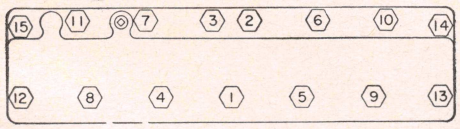

Fig. 1 Cylinder head tightening sequence. 228, 248, 270, 302 engines

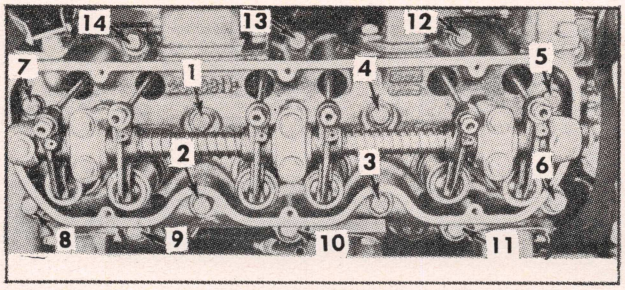

Fig. 3 Cylinder head tightening sequence. V6 and V12 engines

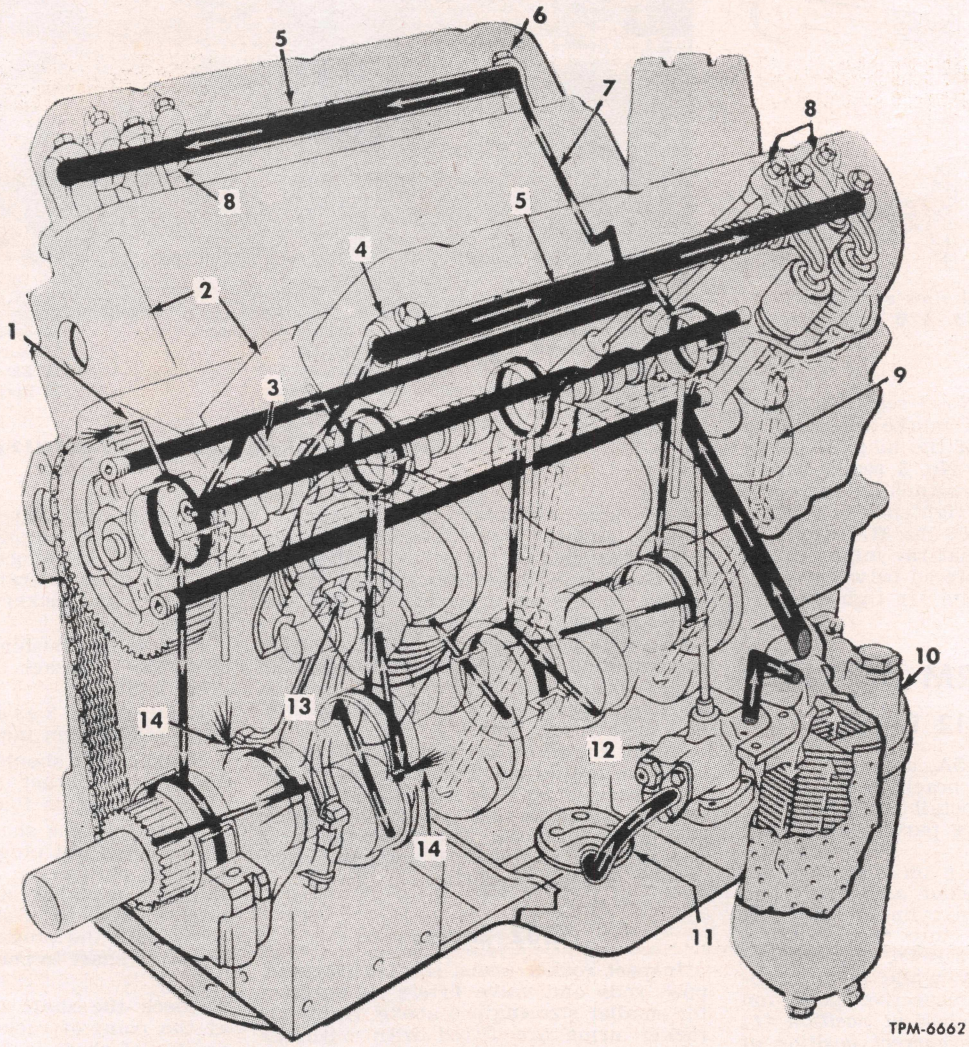

1 To Timing Chain and Sprocket
2 Cylinder Heads
3 Oil From Camshaft Front Bearing
4 Rocker Arm Shaft Front Bracket
5 Rocker Arm Shafts
6 Rocker Arm Shaft Rear Bracket
7 Oil From Camshaft Rear Bearing
8 Rocker Arms
9 Oil Drain Back Holes
10 Oil Filter
11 Oil Pump Inlet Screen
12 Oil Pump
13 Piston Pin Splash Lubricated
14 Spurt Hole in Connecting Rods Lubricates Cylinder Walls

Engine lubrication diagram. V6 engines

8. Remove valve covers.
9. Remove intake manifold with coil and carburetor attached.
10. Disconnect exhaust pipe from exhaust manifold.
11. Remove rocker arm shaft with rocker arms and brackets.
12. Before removing push rods, rock rods to break oil seal between rod and lifter to avoid pulling lifter from bore. Then remove rods and place them in a rack with numbered holes to assure installation in their original position.
13. Remove cylinder head with exhaust manifold attached.

Installation

Coat a new gasket on both sides with No. 3 gasket sealer and install the gasket with the crimped side up.

After cylinder heads have been placed in position, the push rods and rocker arm assemblies should be installed and care taken to see that the push rods are properly seated in the rocker arms and valve lifters.

Cylinder head bolts should be tightened in the sequence shown in Fig. 4 and to 65 to 70 lbs. ft. torque.

Valve cover gaskets should be cemented to the valve cover by coating the valve cover on one side with high compression gasket cement or gasket shellac.

New intake manifold gaskets coated

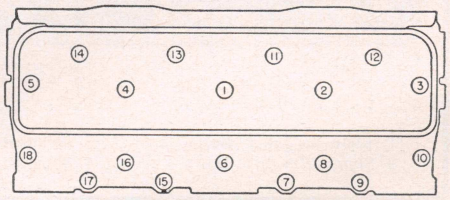

Fig. 4 Cylinder head tightening sequence. V8-324 engine

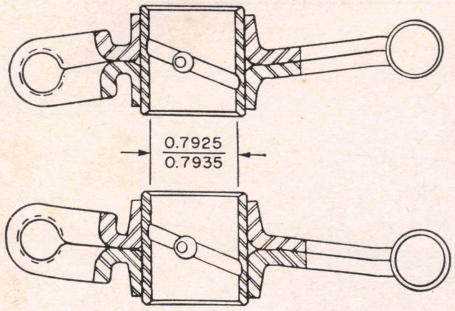

Fig. 5 Sectional view of rocker arm. 228, 248, 270 engines

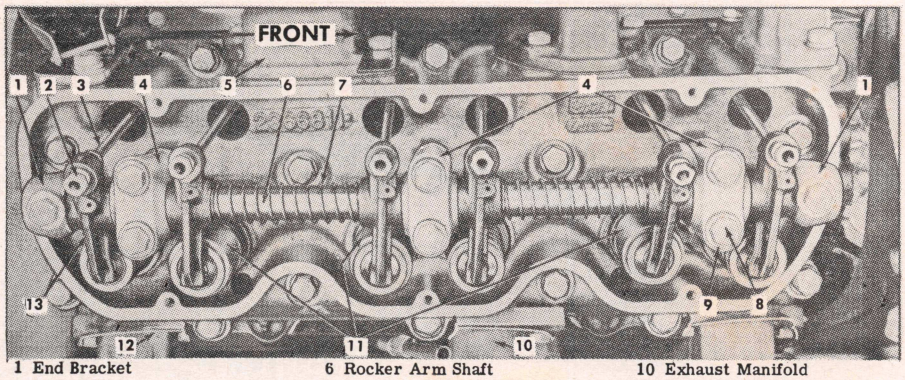

1 End Bracket
2 Adjusting Screw
3 Push Rod
4 Rocker Arm Shaft Bracket
5 Intake Manifold
6 Rocker Arm Shaft
7 Spring
8 Bracket Bolt
9 Flat Washer
10 Exhaust Manifold
11 Shields on Intake Valves
12 Exhaust Manifold Bolt Lock
13 Rocker Arm

Fig. 5A Rocker arms and shafts installed. V6 and V12 engines

on both sides with No. 3 sealer must always be used when intake manifold is replaced. Threads of the manifold bolts should be dipped in No. 3 sealer before installing. Manifold attaching bolts and nuts should then be tightened in a criss-cross fashion to 22-66 lbs. ft. torque. It is very important that the intake manifold be properly centered between cylinder heads before bolts are tightened.

ROCKER ARM SERVICE

V6 and V12 Engines

Referring to Fig. 5A, assemble rocker arms, springs and brackets on rocker arm shaft, then install end brackets. Lubricate all moving parts with engine oil.

Place steel washer on each bracket bolt, then locate rocker arm shaft and bracket assembly on cylinder head and start bracket bolts into tapped holes. Back off adjusting screws, then tighten bracket bolts evenly while holding adjusting screws in respective push rod sockets. *Use special bolt at position (1) (Fig. 5A) to assure correct position of shaft (6).*

Tighten cylinder head to specified torque and then adjust valve clearance.

228, 248, 270 Engines

When disassembled, examine each rocker arm assembly for damage at threads and for distortion. Measure the inside diameter of the rocker arm bores and compare with new dimensions shown in Fig. 5. If worn in excess of .008″, install new rocker arms, Fig. 6.

Examine push rods for distortion. Also check radius at lower end and socket at upper end of each push rod for evidence of roughness. Replace with new parts if damaged in any way.

Check the fit of the valve lifters in recesses in crankcase. The diameter of the lifter bore is .9905-.9915″; if the bore is worn in excess of .002″, an oversize lifter should be installed. The diameter of a new lifter is .989-.990″; if worn in excess of .002″, install new lifter.

302 Engine

Inspect rocker arms, shafts, brackets, push rods and valve lifters as outlined for smaller size engines above. However, rocker arms are fitted with bushings which, if worn in excess of .008″, may be pressed out and new bushings pressed in, Fig. 7. Ream bushings to the dimension shown after installation.

360, 426, 503 Engines

Inspect rocker arms, shafts, brackets, push rods and valve lifters as outlined for the smaller engines. Rocker arms are fitted with bushings that are diamond bored to close tolerances and when worn the complete rocker arm should be replaced.

Rocker arm bushing inside diameter is .874-.875″. Rocker shaft diameter is .8725-.8735″.

Refer to Fig. 8 as a guide when assembling rocker arm mechanism.

Rocker arm should be replaced if the valve stem contact surface is worn or if other damage is found.

Make sure the shaft is clean and that oil holes are not plugged. If an excessive amount of foreign material inside of shaft is indicated, drill and tap the oil plug in each end of shaft, thread a puller screw into the plugs and pull the plugs from the shaft to permit thorough cleaning.

Check the shaft for scoring or wear at the point of rocker arm contact. Diameter of shaft is .791-.792″; if worn in excess of .005″, replace shaft.

If the oil plugs were removed from the ends of shaft and shaft is being reused, press in new oil plugs to a depth of at least ¼″ from end of shaft.

Examine each rocker arm shaft bracket for distortion. Check for stripped threads in top of No. 1 shaft bracket. Replace brackets if damaged in any way.

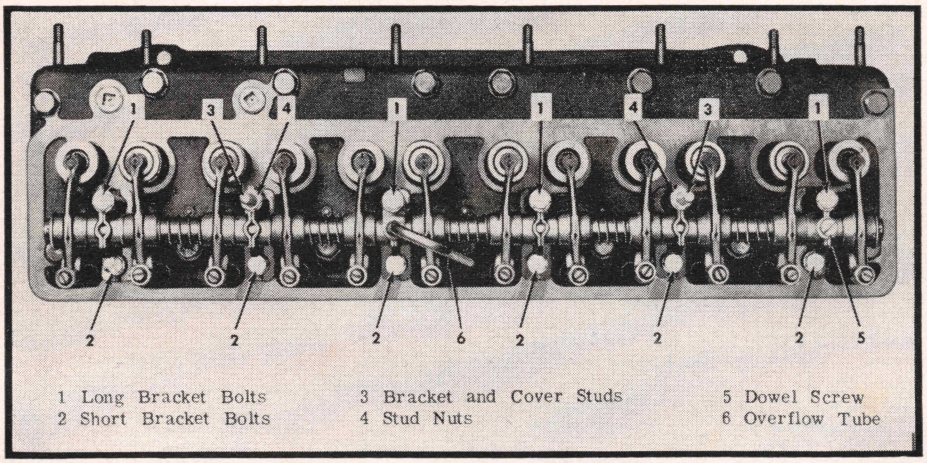

1 Long Bracket Bolts
2 Short Bracket Bolts
3 Bracket and Cover Studs
4 Stud Nuts
5 Dowel Screw
6 Overflow Tube

Fig. 6 Valve rocker arms and shaft installed. 228, 248, 270, 302 engines

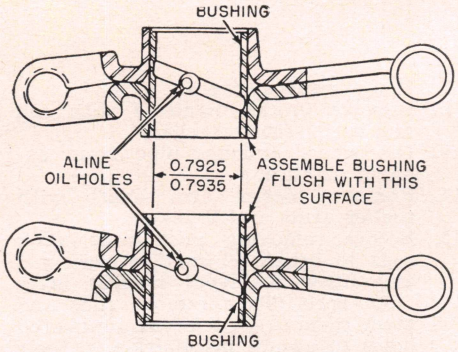

Fig. 7 Rocker arm bushings installed. 302 engine

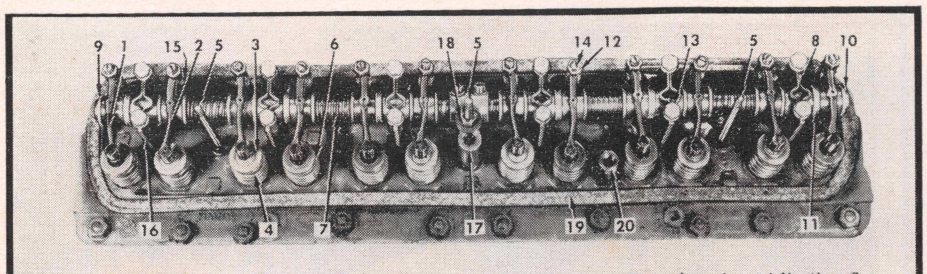

1 Rocker Arm Assembly (Rear)
2 Rocker Arm Assembly (Front)
3 Inlet Valve
4 Valve Spring
5 Cylinder Head Cover Stud
6 Exhaust Valve
7 Rocker Arm Shaft Spring
8 Front Rocker Arm Shaft Bracket
9 Cotter Pin
10 Rocker Arm Shaft Assembly
11 Rocker Arm Shaft Washers
12 Adjusting Screw Lock Nut
13 Rocker Arm Shaft Bracket Stud Nuts
14 Rocker Arm Adjusting Screw
15 Valve Push Rod
16 Rocker Arm Shaft Bkt. (Rear)
17 Oil Pressure Reducing Valve
18 Reducing Valve Stud and Shield
19 Valve Rocker Arm Cover Gasket
20 Crankcase Ventilation Valve

Fig. 8 Typical arrangement of rocker arms. 318, 360, 426, 503 engines

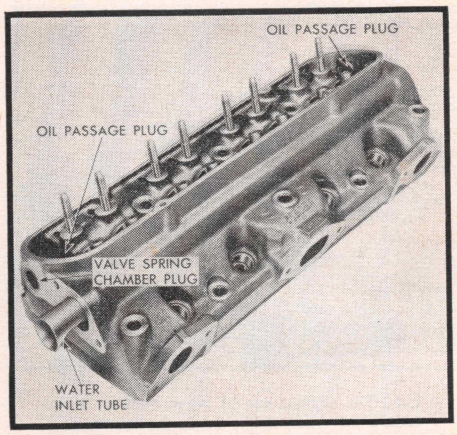

Fig. 10 Left cylinder head (left front view). V8-288, 316, 336, 347 engines

V8-288 Engine

When the head is disassembled, clean the rocker arms and balls and look for evidence of wear. Clean the push rods and oil passage through center of each rod. See that the rods are straight.

Check oil passages from oil gallery to rocker arm studs. A simple test can be made by using a rubber hose and smoke. Block the lower end of the cylinder head screw hole which feeds the oil gallery, Figs. 9 and 10, and blow smoke in the top end of the hole through the rubber hose. Smoke should come out of the hole in each stud.

Rocker arm studs are replaceable providing a press of two tons capacity or more is available.

1. Remove cylinder head.
2. Remove rocker arm.
3. Pull out rocker arm stud by using washers or other suitable shims under the nut.
4. Ream out hole, Fig. 11. *Service replacement studs are .003" oversize.*
5. Remove plugs from ends of cylinder head oil gallery and thoroughly clean out metal deposits and foreign matter from oil gallery.
6. Position rocker arm on new stud and place Stud Installer J-5716, Fig. 12, on stud in place of rocker arm ball.
7. Coat stud with white lead and oil, and with cylinder head mounted in press on Tool No. J-5712 so studs are vertical, position new stud with rocker arm and stud installer over hole in head, Fig. 12.
8. Press stud into head until it is in about halfway ($\frac{7}{16}$").
9. Position Valve Train Gauge J-5710, Fig. 13, in push rod hole so that it seats properly in rocker arm.
10. With valve seated, slowly press stud into cylinder head until the gauge is positioned as shown in Fig. 13.
11. Blow air through hole in stud to be sure passage is not restricted.
12. Reinstall parts removed and install head.

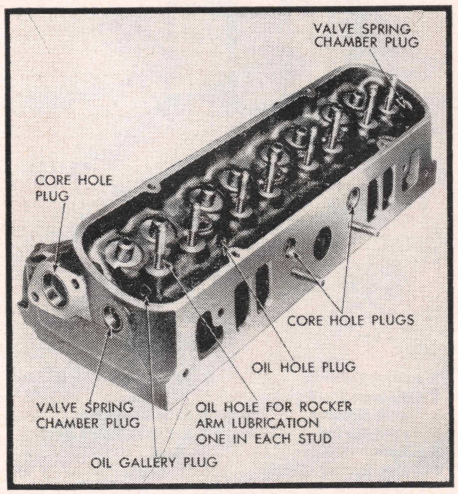

Fig. 9 Left cylinder head (right rear view). V8-288, 316, 336, 347 engines

V8-316, 336, 347 Engines

No valve adjustment is required on these engines due to the new valve train. This was accomplished by moving the valve lifter oil supply hole nearer the top of the lifter body to insure ample oil reserve, along with the new design of the rocker arm ball retaining nut and rocker arm mounting stud.

V8-324 & 370 Engines

Rocker arms are identical except that the intake arms may be identified by a brass pin which blocks the upper end of the drilled passage leading to the push rod oil hole. The oil passage provides lubrication between the push rod and its seat in the rocker arm.

The rocker shafts are supported by four brackets on each cylinder head, three of which are identical. The remaining bracket on each head has an oil hole drilled through the bottom which indexes with the oil line in the cylinder head originating at the No. 2 camshaft bearing for the left side and No. 4 camshaft bearing on the right side. These two brackets can be identified by their dowel pins which position the rocker arm shaft with respect to the oil passages.

Three rocker shaft springs are used to keep the center rocker arms in proper position against the brackets, whereas both end rocker arms are positioned by a flat washer, wave washer and a cotter pin, Fig. 14.

When necessary to disassemble the rocker arm shaft assembly, remove the cotter pin, wave washer and flat washer. Remove rocker arms, supports and springs from shaft. Note that one support is doweled to each shaft and should not be removed when disassembling the shaft assembly.

When assembling rocker arms and supports to shaft, be sure the supports are installed correctly on the shaft in relation to the doweled support. Be sure also, that the rocker arm (push rod end) is on the same side as the large cylinder head bolt hole in each support.

VALVES, ADJUST

Six-Cyl. Engines

Whenever the cylinder head has been tightened or after the engine has been rebuilt, the valve lash should be set to the specifications given in the chart. Adjust the lash with the engine at operating temperature and idling slowly.

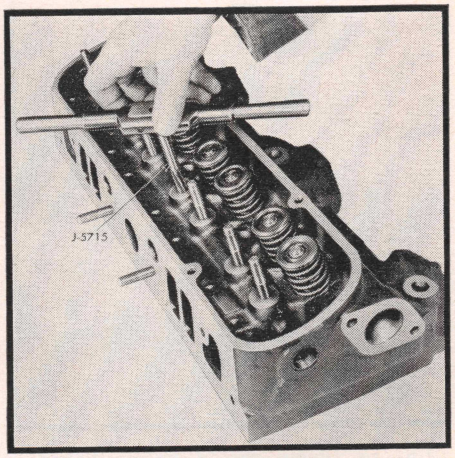

Fig. 11 Reaming rocker arm stud hole. V8-288, 316, 336, 347 engines

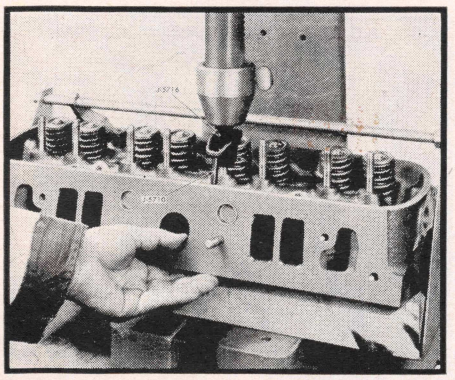

Fig. 12 Pressing in new rocker arm stud. V8-288, 316, 336, 347 engines

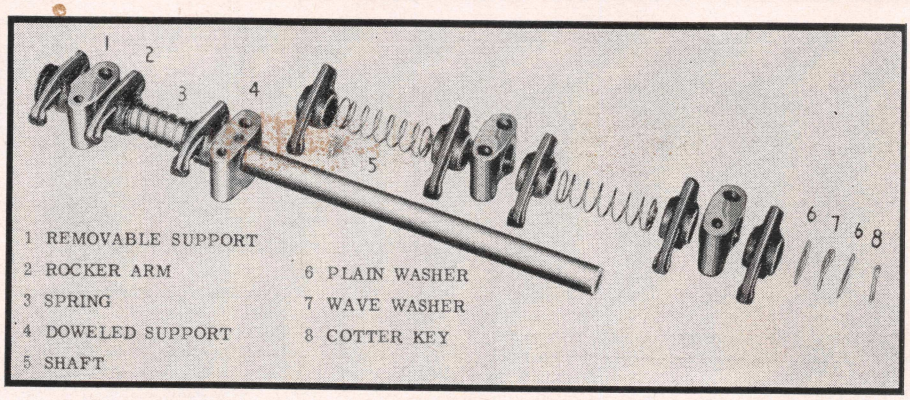

Fig. 14 Rocker arm assembly. V8-324 engine

V8-288 Engines

Whenever rocker arms, push rods and valve lifters are removed, an initial setting of the rocker arm nuts must be made to establish the correct operation of the valve train.

Install the lifters in the bores from which they were removed. Install push rods and rocker arms with balls and start rocker arm nuts. *Push rods should be installed in same places they were originally installed and with same end contacting rocker arm.*

The self-locking rocker arm nuts should be adjusted as follows to properly position the plungers within the lifters. Each rocker arm nut must be adjusted when the corresponding valve is completely closed. The simplest and most accurate way to make this adjustment is to adjust one cylinder at a time while it is in the firing position.

With distributor rotor pointing to firing position for No. 1 cylinder, tighten No. 1 intake and exhaust rocker arm ball nuts, one at a time, just until there is no up and down movement of the push rod (do not depress lifter plunger). When rocker arm movement has just been eliminated, tighten rocker arm ball nut *one complete turn.* This will depress the plunger the proper amount within the lifter.

Turn the crankshaft and adjust each set of rocker arm nuts according to the firing order of the engine in the same manner as outlined above.

V8-316, 336, 347 Engines

To install a new rocker arm stud in the cylinder head, a new Rocker Arm Stud Installer J-6301 and a new Valve Train Gauge J-6324 should be used, following the procedure outlined for V8-288 engines.

When the valve rocker arm ball retaining nut is tightened to a torque of 15 lbs. ft., proper location of the rocker arm with respect to the push rod and valve lifter is automatically assured. The need for adjusting rocker arm position as in the V8-288 engine is thereby eliminated.

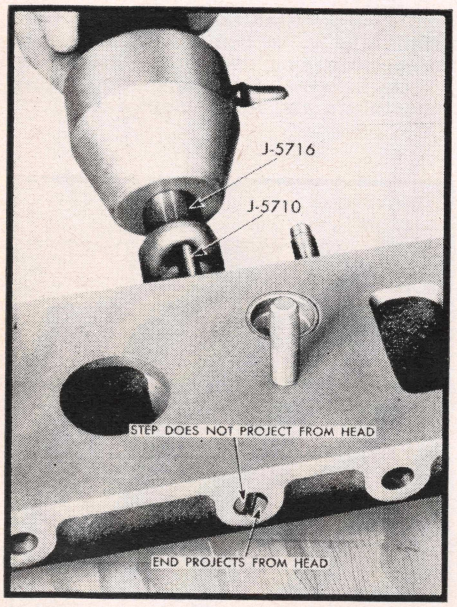

Fig. 13 Gauge should be positioned as shown when stud is properly installed. V8-288, 316, 336, 347 engines

VALVES, REMOVE

In Line Six-Cyl. Engines

After removing the cylinder head and rocker arm assembly, use a suitable spring compressor to compress the springs. Remove the valve locks and springs. Check the keeper grooves in the valve stems for burrs and remove any burrs with a file to prevent scoring of valve guides. Remove the valves and place them in a board with numbered holes so they can be replaced in the same valve port from which they were removed.

V6 and V12 Engines

Referring to Figs. 14A and 14B, use valve spring compressor to relieve pressure of valve springs against retaining parts. Remove valve keys and release spring compressor, then remove valves and related parts.

On 305A light duty engines remove valve spring seats from counterbore in cylinder head. On 305B, 305C and larger engines remove valve rotators from counterbores in cylinder head.

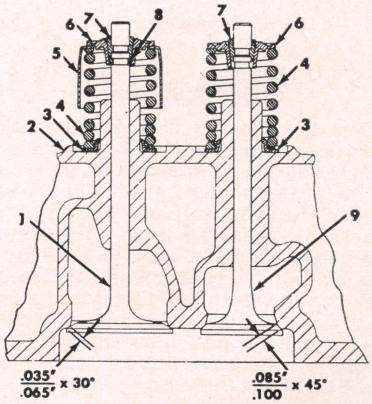

1 Intake Valve
2 Cylinder Head
3 Valve Spring Seat
4 Valve Spring
5 Shield
6 Spring Cap
7 Valve Key
8 Oil Seal
9 Exhaust Valve

TPM-6325

Fig. 14A Valve details. V6-305 engines

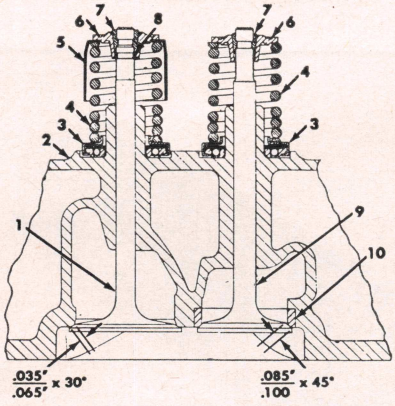

1 Intake Valve
2 Cylinder Head
3 Valve Rotator
4 Valve Spring
5 Shield
6 Valve Spring Cap
7 Valve Key
8 Oil Seal
9 Exhaust Valve
10 Exhaust Valve Seat Ring

TPM-6326

Fig. 14B Valve details. V6-351, 401, 478, V12-702

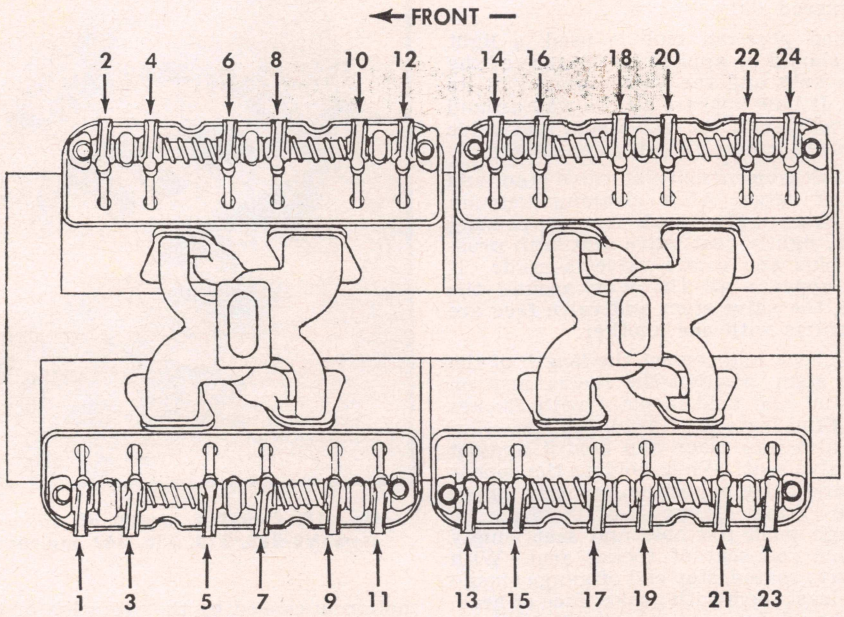

VALVE ADJUSTING INSTRUCTIONS

702-ENGINES

1. Turn crankshaft so No. 9 cam lobe is up (intake valve open on No. 5 cylinder) and UDC#1 mark on crankshaft pulley is aligned with pointer. At rocker arms No. 1, 3, 5, 6, 8, 10, 11, 14, 15, 19, 22, and 24 turn adjusting screw down until there is no slack in push rod, then continue to tighten adjusting screw 1 ¼ turns.
2. Turn crankshaft 360° so No. 15 cam lobe is up (intake valve open on No. 7 cylinder) and UDC#1 mark on crankshaft pulley is aligned with pointer. Adjust rocker arms No. 2, 4, 7, 9, 12, 13, 16, 17, 18, 20, 21, and 23 in same manner described in step 1 above.

NOTE: Lifters must be full of oil before adjusting. Refer to lifter assembling and testing instructions in text. Rocker arm numbering corresponds to cam lobe positions running consecutively from front to rear of engine.

Fig. 14C Adjusting hydraulic valve lifters on V12 engines

Warning: All engines except 305 have sodium cooled type valves. Sodium cooled valves must not be discarded with other scrap metal. If one of these valves is accidentally broken the sodium will react violently with water resulting in fire or explosion due to chemical action. Serious burns will result if sodium or its oxide comes in contact with the skin.

V8-288, 316, 336, 347 Engines

Remove valve spring retainer cup locks (keepers), intake valve stem oil seals, valve spring retainer cups, valve springs and valves, using valve spring compressor J-5712.

Intake valve stem oil seals must be discarded and replaced with new seals anytime they are removed.

Place valves in a valve train holding stand or in a board with numbered holes so the valves may be replaced in the exact port from which they were removed.

V8-324 & 370 Engines

To remove the valve springs and dampers, take off the cylinder head as outlined previously. Then use a suitable valve spring compressor, like the one shown in Fig. 15, compress the valve springs until the valve stem locks can be removed. Remove spring retainer, spring and dampers.

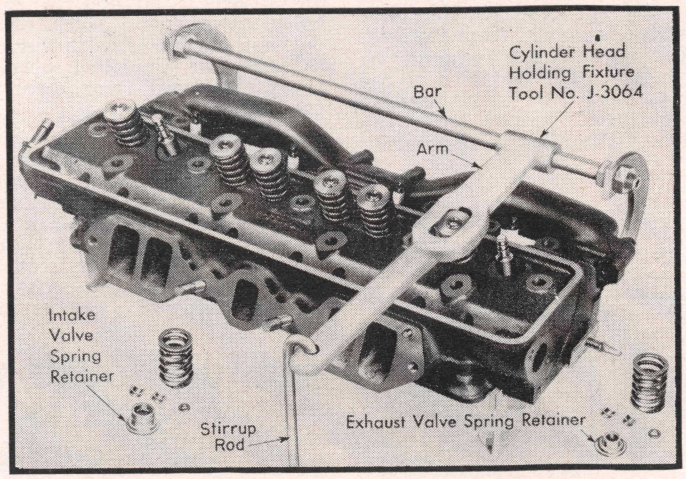

Fig. 15 Showing tool to remove and replace valves and springs. V8-324 engine

VALVES, GRIND

V6 and V12 Engines

Care must be taken when grinding valves not to remove too much stock from the valve face. If it should be necessary to reduce thickness of intake valve head to $\frac{1}{64}$" or less at outer edge of valve head to obtain a smooth face, discard the valve. Exhaust valves should not be used if the outer edge of the valve head is less than $\frac{3}{64}$" after refacing.

V8-324, V8-370 & In Line Six-Cyl. Engines

Clean the valves with a wire wheel brush, making sure that all carbon is removed from the top and bottom of the heads as well as the gum which might have accumulated on the stems.

In refacing valves take off only the minimum of metal required to clean up the valve faces. If the outer edge of the valve becomes too thin or sharp due to excessive grinding, the valve must be replaced. This condition leads to premature breakage, burning and pre-ignition due to heat localizing on this knife edge. If the edge of the valve head is less than $\frac{1}{32}$" thick after grinding, replace the valve.

Inspect the valve seats in the head for cracks, burns, pits, ridges or improper angle. Reconditioning the valve seats is very important because the seating of the valves must be perfect for the engine to deliver the power and performance built into it. Another important factor is the cooling of the valve heads. Good contact between each valve and its seat

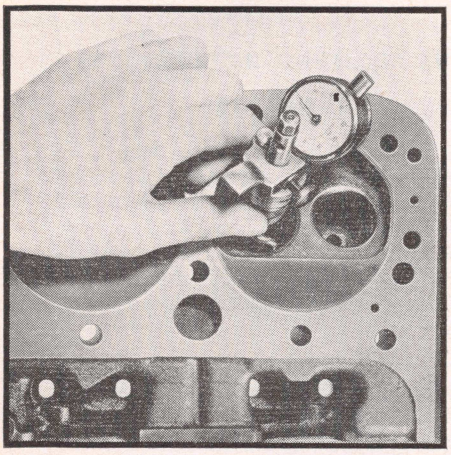

Fig. 16 Checking concentricity of valve seat with dial gauge

in the head is imperative to insure that the heat in the valve head will be properly carried away.

Regardless of the methods for valve seat reconditioning, the final seat for the valves should be $\frac{3}{64}''$ to $\frac{1}{16}''$ for intake seats and $\frac{1}{16}''$ to $\frac{3}{32}''$ for exhaust seats. Seats should be concentric within .002″ as indicated on a dial gauge, Fig. 16.

Caution: 360, 426, 503 Engines

Exhaust valves in these engines are filled with sodium as a cooling agent. These valves must not be discarded with other scrap metal. If a sodium cooled valve is accidentally broken, the sodium will react violently with water, resulting in fire and explosion due to chemical action. Serious burns will result if sodium or its oxide comes in contact with the skin.

V8-288, 316, 336, 347 Engines

Intake valve seat angle is 30°, exhaust seat angle is 45°. The intake face angle is 29° and exhaust valve face angle is 44°. This will provide hairline contact to provide positive sealing and reduce build-up of deposits on seating surfaces.

Do not use refacing equipment excessively; only enough material should be removed to true up surfaces and remove pits. The valve head will run hotter as its thickness is diminished; therefore, if the valve face cannot be cleaned up without grinding to a point where the outside diameter of the valve head has a sharp edge, the valve should be replaced. Whenever it is necessary to replace a valve, the new valve should be of the same stem diameter as the valve removed (unless the guide is replaced also).

Width of exhaust valve seats should be a very accurate $\frac{1}{16}''$. Intake valve seat should be between $\frac{3}{64}''$ and a liberal $\frac{1}{16}''$. If seat width is excessive it should be narrowed by grinding with a flat stone, Fig. 17. This is the only method that should be used to narrow the seat. Lapping of valve seats is not required or recommended.

Concentricity of valve seat and valve guide can be checked by using a suitable dial indicator or prussian blue. When using a dial indicator, total runout should not exceed .001″.

When prussian blue is used, a light coat should be applied to the face of the valve only and the valve rotated in its seat. If blue appears all the way around the valve seat, the valve seat and valve guide are concentric with one another.

Check concentricity of valve stem and face of valve. After cleaning prussian blue from valve seat from preceding check, lightly coat valve seat with prussian blue and rotate valve in guide. If blue appears all the way around the valve, the valve stem and valve face are concentric with one another.

To check and correct the length of the valve stem, position the rocker arm on the stud and hold in place with Rocker Arm Stud Installer J-5716, Fig. 18. Slip the valve into place and hold it against the valve seat. While holding the rocker arm and valve in position securely, insert Valve Train Gauge J-5710, Fig. 18, through push rod hole and seat snugly in push rod seat of rocker arm. With all parts seated, step end of gauge should be at least flush with gasket face of head, but should not project past the step on the gauge, as shown in Fig. 18.

If the gauge projects too far, indicating that the valve stem is too long, grind the tip of the valve stem as necessary to make the gauge index properly. *Do not overheat the valve stem when grinding as excessive heat will soften the hardened stem, causing rapid wear.*

VALVE ROTATORS

All Engines (Except 228, V6-305 & Light Duty 288)

The parts involved in the rotating mechanism, Fig. 19, are a special spring seat retainer, a pair of flat half-moon keys, a close fitting cap located on the valve stem and a specially constructed valve stem.

In order to accomodate valve expansion, the valve lash must be maintained. When camshaft rotation causes this lash or clearance to be taken up, the cap on the valve stem causes the valve keys to raise the spring retainer, removing the load on the valve springs from the valve *before* the valve is moved from its seat. A clearance of .002-.004″ should be maintained between the end face of the valve stem and cap. This is the distance the spring retainer is moved *before* the valve is moved. The slow valve rotating motion is caused by the vibration of the valve, the flowing of exhaust gases around the valve head, and a slight rotating motion imparted to the valve by the valve spring.

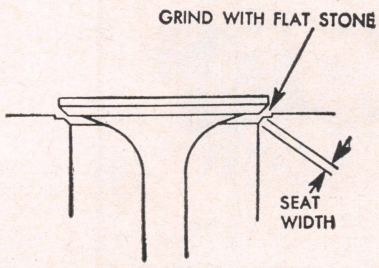

Fig. 17 Valve seat after grinding with flat stone. V8-288, 316, 336, 347 engines

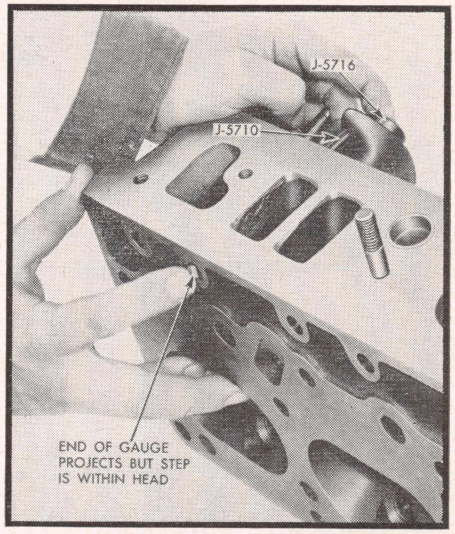

Fig. 18 Checking length of valve stem. V8-288, 316, 336, 347 engines

Whenever valve work is being done, a check for clearance should be made by holding the assembled valve and rotating mechanism in the hands. With one hand, press down on the valve cap and turn the valve with the other hand. If the valve turns readily, it indicates that there is clearance present.

A special gauge is available to check this clearance. If the gauge indicates no clearance, grind off the end of the valve stem. If the clearance is too great, grind off the open end of the valve cap.

VALVE SEAT INSERTS

6-318, 360, 426, 503, V6 and V12 Engines

Figs. 20 and 20A illustrate the special tools which are available to remove and install these inserts. Lacking these tools, an alternate method is to drill two holes at opposite sides of the insert but not all the way through. Then cut through the undrilled portion with a sharp chisel and remove the two pieces.

To install a new insert, first remove all burrs and sharp edges from the seat recess. Then chill the insert with dry ice to obtain maximum contraction of the metal. It may also be necessary to heat the cylinder head by immersing in water heated to 180-200 degrees. Then with the insert chilled and the head heated, quickly drive the insert in place, being sure to start it in square.

EXHAUST VALVE WATER NOZZLES

In Line Six-Cyl. Engines

Exhaust valve seats are effectively cooled by a constant spray of water un-

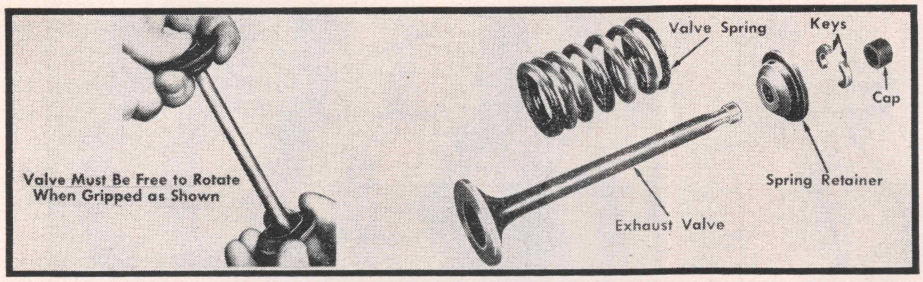

Fig. 19 Valve rotator and retaining parts. Six-cyl. engines. Typical of V8s

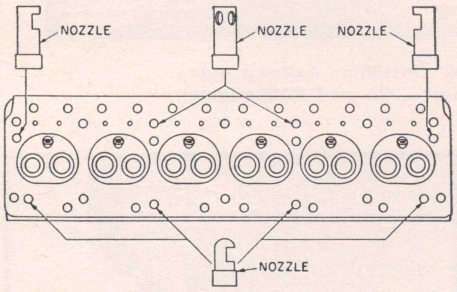

Fig. 21 Water nozzle installation. 228, 248, 270, 302 engines

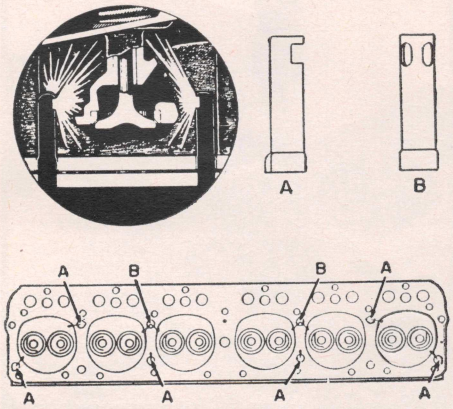

Fig. 22 Water nozzle installation. 318, 360, 426, 503 engines

der pressure from nozzles in the cylinder head. These copper nozzles are installed in the head in such a manner that the opening near the upper end directs the flow of water to the valve seat. If nozzles are removed, great care should be taken to see that the opening is pointed in the proper direction, and that the nozzles are of the proper length.

Examine nozzles for evidence of scale formations and for disintegration. If scale cannot be removed without damaging nozzles, they must be replaced. To remove a nozzle, collapse its edge with a sharp chisel and pull it out of the cylinder head.

When installing new nozzles, aligning the contour of the nozzle with the hole in the cylinder head will position the nozzles with the openings pointing in the proper direction. Refer to Figs. 21 and 22 to identify the length and type of nozzles to be installed in each opening. Nozzles must be pressed in flush with the face of the cylinder head.

VALVE SPRING INSTALLED HEIGHT

When valves and seats are reground the position of the valve in the head is changed so as to lessen the valve spring tension. Without proper valve spring tension the valve does not seat long enough or it may not seat completely. Since the valve is cooled by transferring heat from the valve head to the seat and thence to the coolant, improper valve spring tension will cause worn, pitted and distorted valves which result in loss of compression and power as well as poor gasoline mileage.

When valves, springs, retainers and locks are installed, measure the assembled height of the valve springs from the surface of the cylinder head spring pad to the underside of the spring retainer as shown in Fig. 22A. If the assembled height is greater than the dimension given in the *Valve Specifications Chart,* install a spacer or shim of proper thickness between cylinder head spring pad and spring to bring the assembled height to specifications.

GRINDING VALVE STEMS

For Proper Lifter Clearance

If a valve grind job is needed, and if

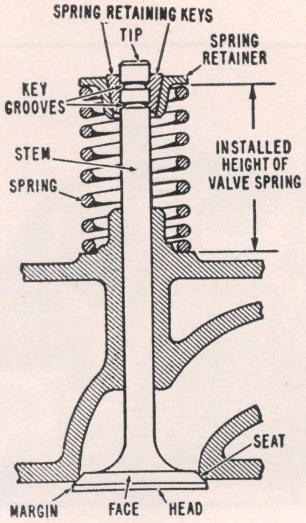

Fig. 22A Checking installed height of valve spring

shims are found under the valve springs, very likely the valves, if reground, would not leave sufficient margin on the valve head for satisfactory operation. Since the maximum thickness of shimming that can be used satisfactorily is $\frac{1}{16}$", and since the acceptable valve head margin is approximately $\frac{3}{64}$" to $\frac{5}{64}$", one can readily see that there would be insufficient margin left on the valve head if it was reground. Therefore, it is recommended that new valves be installed.

After grinding the valves, if shims are required to restore the correct valve spring installed height, the valve stem should be ground off the same amount as the thickness of shims required. This will automatically provide the proper static clearance between the hydraulic lifter and the push rod.

VALVE SPRING TESTING

All Engines

Wash all springs with gasoline or other suitable solvent. Examine the springs for damage or corrosion due to acid etching, which will develop into surface cracks and cause spring failure.

Check the valve spring tension on a spring testing fixture, if one is available, Fig. 23, and according to the specifications given in the *Tune Up and Valve Specifications* chart. If a fixture is not available, at least check the free length of each spring by standing it alongside a new spring. Any spring that does not conform to the pressure specifications within 10% should be replaced Likewise, any spring that stands shorter than the new spring used for comparison should be discarded. Of course, cocked springs should also be scrapped.

VALVE GUIDES

V6 and V12 Engines

Valve guides in these engines are an integral part of the head and, therefore, cannot be removed. For service, guide holes can be reamed oversize to accommodate one of several service valves with oversize stems. Intake valves are available with .005" and .010" oversize stems. Exhaust valves are available with oversize stems of .005", .010" and .020". For 351 and larger engines a .030" oversize valve is also available.

Select the reamer for the smallest oversize which will provide a clean straight bore through the valve guide. After reaming a new seat should be cut into the head to assure perfect seating of the new valve.

In Line Six-Cyl. Engines

Valve guides furnished for service replacement are designed to give proper clearance when pressed into the cylinder head without reaming, if the proper tools are used for the installation operation. Be sure valve stems are free in the new guides before installing valve springs.

On 228, 248, 270 and 302 engines, when installed, exhaust guides must protrude $\frac{55}{64}$" from head; intake guides $\frac{59}{64}$". These

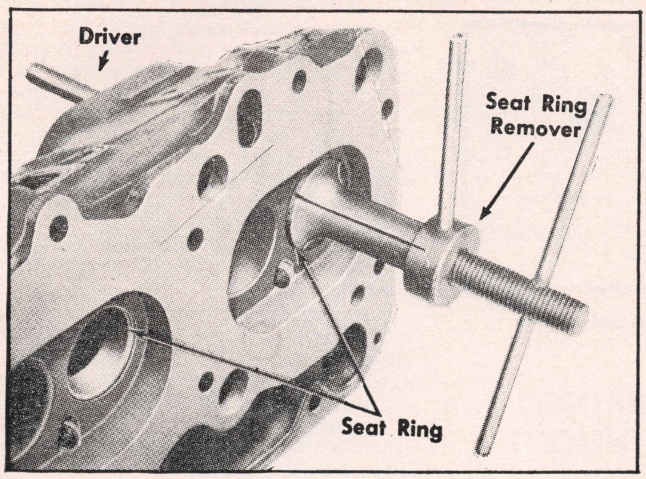

Fig. 20 Removing exhaust valve seat insert. V6 and V12 engines

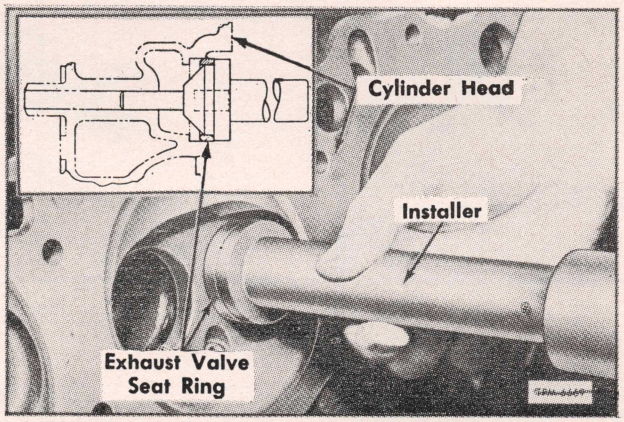

Fig. 20A Installing exhaust valve seat insert. V6 and V12 engines

dimensions are subject to a tolerance of plus 0 and minus $\frac{1}{32}''$.

On 318, 360, 426 and 503 engines, press in the new guides until the shoulder on the guide is flush with the edge of the recess in the cylinder head.

V8-288 Engine

1. Drive out old valve guide, Fig. 24.
2. Drive new valve guide into place from combustion side of cylinder head as follows:
3. Coat outside of valve guide with white lead and oil.
4. Start chamfered end of guide into its hole and drive into cylinder head with the tool shown in Fig. 24 until the end of the guide is positioned as shown in Fig. 25. Use the depth gauge shown in Fig. 26 to measure this distance.

Since valve guides taper .0015″ per inch, a tapered reamer, Fig. 27, must be used to ream the guides to provide the correct taper and correct valve fit. Correct fit of valve stem in guide is such that when valve is started in guide it will just drop through of its own weight, but will have no perceptible side play.

Since this is a tapered reamer, the hole in the valve guide will become larger as the reamer is turned down. To avoid reaming oversize, when using the type reamer shown in Fig. 27, set the sliding stop to 3¼″ from the end and ream until the sliding stop bottoms. Then, move the stop back to 3½″ from the end and carefully continue reaming a little at a time, alternately reaming and testing the valves stem fit until the exact fit is obtained.

V8-316 Engine

Valve guides are cast integral with the cylinder head and are tapered as in the past. Some cylinder heads may be equipped with one or more of the removable type guides. These guides are installed in production if the integral valve guides are reamed oversize in the machining operation.

If necessary to service a guide to accommodate either the .001″ or .003″

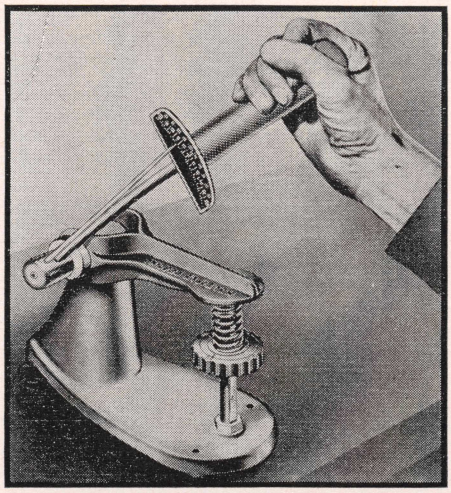

Fig. 23 Checking valve spring tension with a spring testing fixture and torque wrench

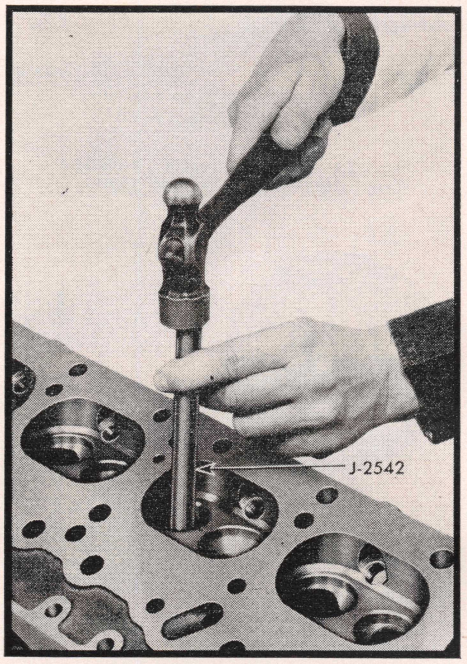

Fig. 24 Driving out valve guide. V8-288 engine

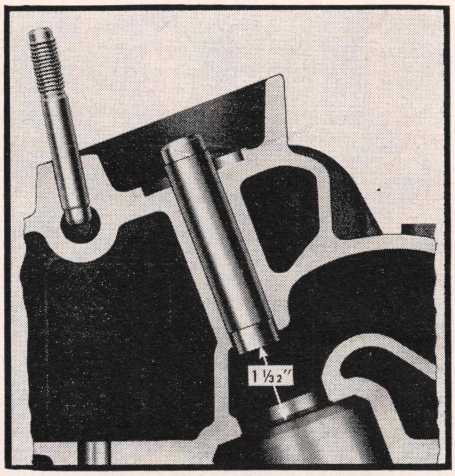

Fig. 25 Correct installation of valve guide. V8-288 engines

oversize valve stem, use the proper reamer, Fig. 27. If replacement of a removable type valve guide is necessary, use the procedure outlined previously for V8-288 engines.

V8-336 & 347 Engines

Unlike previous models, the valve guides are straight (not tapered). Valves with oversize stems are available in .001″, .003″ and .005″ oversize. When reaming guides a clearance of .0015-.0025″ for intake and .0024-.0039″ for exhaust must be maintained. For best results when installing .005″ stem use a .003″ oversize reamer first and then ream to .005″ oversize. *Always reface the valve and valve seat after reaming valve guide.*

V8-324 & 370 Engines

The overall length of the intake and exhaust valve guides is the same. But

the intake guide has a smaller bore than the exhaust guide and is also beveled at the bottom.

Both intake and exhaust valve guides extend $\frac{27}{32}$ in. above the face of the valve spring seat. It is important when installing a valve guide that the distance from the top of the guide to the cylinder head be held to the above specifications. Therefore, tool BT-13 is available to make this installation properly. With this tool or its equivalent, drive the new guide in from the top of the cylinder head until the tool seats on the valve spring seat.

VALVE LIFTERS

V6 and V12 Engines

Hydraulic valve lifters are used in V12 engines whereas mechanical lifters are employed in V6's. It is not necessary to remove the cylinder head to remove and install valve lifters if a suitable magnet rod or an expansion type tool is available, Fig. 27A, which is designed to remove and install the lifters through holes in cylinder head.

Removal, V8-288, 316, 336, 347 Engines

Remove intake manifold, push rod cover and rocker arm cover. Loosen rocker arm ball nut and move rocker arm off push rod.

Before removing lifter that is suspected of having a stuck plunger, it can be tested by using Lifter Plunger Unloader J-5097. To check lifter, Fig. 28, insert pin of unloader tool through hole in push rod seat and push down on tool. Pin will unseat ball and tool will move push rod seat and plunger down. If lifter plunger is stuck, it will be impossible to move push rod seat down. Remove push rod and lifter. If more than one lifter is to be replaced, be sure to identify them (push rods as well) so they will be installed in the same position.

Removal, V8-324 & 370 Engines

To remove valve lifters, take off successively the intake manifold, engine push rod cover, valve cover, rocker arm shaft assembly, push rods and remove valve lifters, Fig. 29.

Valve lifters in production engines may be one of four sizes: standard, .001, .002 or .003 in. oversize. It is important when replacing one or more lifters that the proper size lifter be ordered. An identification numeral is etched on all lifter bodies except standard. The cylinder block is marked for lifter size on the rail under the push rod cover. Valve lifters .005 in. oversize are available for service replacement.

Service

Failure of a hydraulic lifter is generally caused by an inadequate oil supply, dirt or other foreign substance. An air leak at the intake side of the oil pump or too much oil in the engine will cause air bubbles in the oil supply to the lifters, causing them to collapse. This is a probable cause of trouble if several lifters fail to function, but air in the oil is an unlikely cause of failure of a single unit.

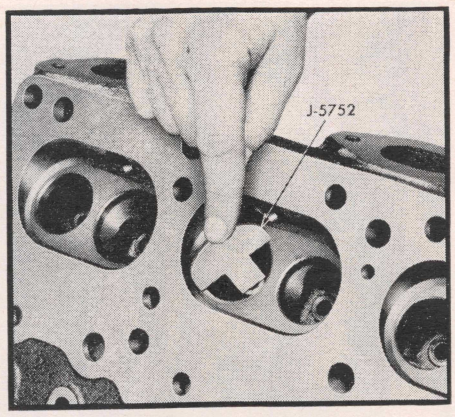

Fig. 26 Checking position of valve guide with depth gauge. V8-288 engines

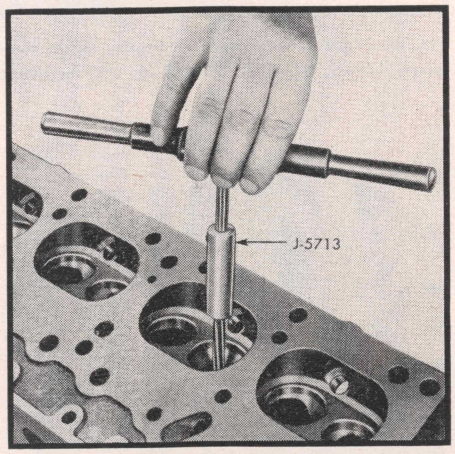

Fig. 27 Reaming valve guide with tapered reamer (tapers .0015" per inch). V8-288, 316, 336, 347 engines

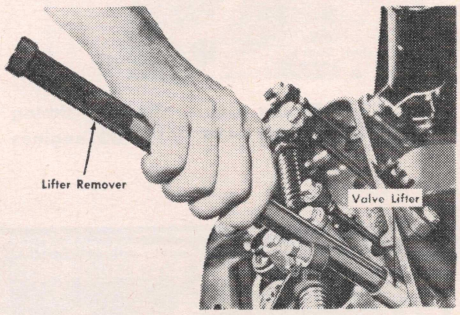

Fig. 27A Removing or installing valve lifter with expansion type tool on V6 and V12 engines

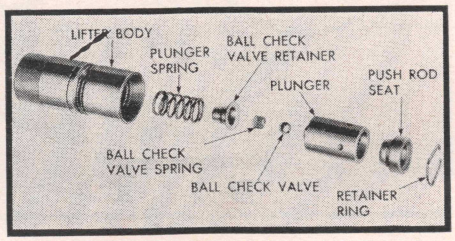

Fig. 28 Layout of hydraulic valve lifter parts. V8-288, 316, 336, 347 engines

In servicing the lifters particular attention should be given the plunger and ball. The plunger should be checked for signs of scoring or wear, and the ball for pitting. Check the ball seat in the end of the plunger for any condition that would not allow the ball to seat perfectly. If any of the above conditions are apparent, install a new lifter assembly.

Do not disassemble a lifter in dirty surroundings or on a dirty work bench. Use clean paper on the bench and, after the lifter has been disassembled, place the loose parts in a numbered rack with the parts of each unit together. Then submerge in clean kerosene as a protection against dirt or corrosion.

With more than one lifter disassembled it is imperative to keep the parts of each lifter separate. The plunger and ball must always be fitted in the same body.

Disassemble

With a suitable tool, pry out the plunger retainer ring. Clean varnish deposits from inside the lifter body above the push rod seat. Then invert the lifter body and drop out the parts.

Cleaning

Wash all lifters in a suitable solvent that will remove all trace of varnish and carbon (paint thinner will do). Then, working on one lifter at a time and using clean lint-free cloths, thoroughly wipe off all parts. Clean the plunger and the internal and external surfaces of the body with a hard wiping action to remove any varnish residue.

To insure absolute cleanliness of a reconditioned lifter assembly, it is ad-

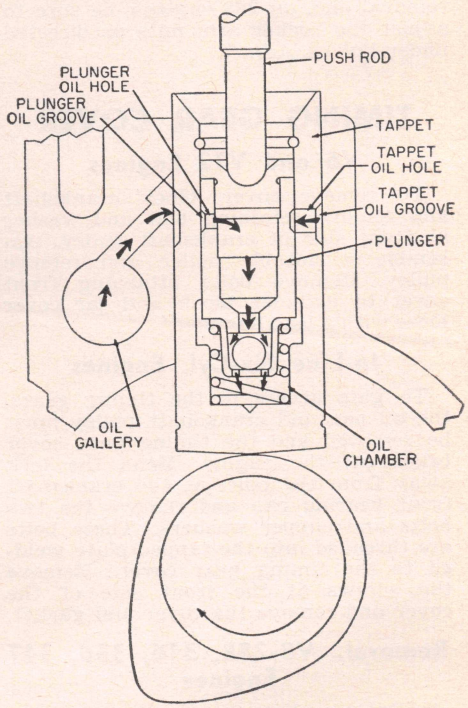

Fig. 29 Hydraulic valve lifter. V8-324 & 370 engines

visable to service one at a time, assembling it before working on the next one.

Inspection

Inspect the lifter body for blow holes and scoring. Replace entire unit if body is roughly scored or grooved.

Using a magnifying glass, inspect the check ball seat for defects. Inspect the outer surface of the plunger for scratches or scores. Defects in the check ball seat or scores or scratches on the outer surface of the plunger which can be felt with the fingernail are causes for replacing the entire unit.

Replace the push rod seat if the area where the push rod contacts is rough or otherwise damaged.

Using a magnifying glass, carefully examine the check ball for nicks, imbedded material or other defects which would prevent proper seating. Even though no defects are found it is advisable to discard the old ball and use a new one when servicing a lifter.

Replace the ball retainer if it is cracked or has a heavily pounded area between the two holes. A small bright spot where the ball contacts the retainer is the normal condition.

Replace the plunger spring only if it is distorted or damaged.

Assemble

Rinse all parts in clean kerosene and assemble without drying. This will avoid the adherence of dust or lint if they are blown off or wiped with cloth.

Place the parts in the body. The plunger must slide freely in the body. Place the push rod seat on the plunger and depress these parts and install the plunger retainer in the groove in the body.

Installation

Install lifters in the reverse order of removal and, on 288 engines, be sure to adjust the rocker arm nuts as directed under *Valves, Adjust.*

TIMING GEAR COVER

V6 and V12 Engines

To remove cover, block crankshaft and remove retaining bolt and washer at front side of crankshaft pulley. Assemble a suitable puller and remove pulley. Remove bolts attaching front cover to cylinder block and jar cover loose with a lead hammer.

In-Line Six-Cyl. Engines

To gain access to the timing gears, the oil pan and crankshaft pulley must be removed and the timing gear cover taken off the engine. Bend the lock away from the bolts at the crankshaft front bearing cap and remove the two bolts and copper washers. These bolts are threaded into the tapped plate welded to the timing gear cover. Remove the screws at the front side of the cover and remove the cover and gasket.

Removal, V8-288, 316, 336, 347 Engines

1. Drain radiator.
2. On vehicles with power steering, remove pump with mounting bracket from pad on top of timing chain cover and lay back on fender skirt where it will be out of the way. Before doing so, however, disconnect battery ground strap to prevent pump from grounding "BAT" terminal of regulator.
3. Remove generator.
4. Remove fan belt and power steering pump belt.
5. Remove fan and pulley.
6. Disconnect upper radiator hose from radiator and remove fan shroud.
7. Disconnect lower radiator hose and heater hose and take off radiator.
8. Remove water inlet elbows from cylinder heads (leave attached to hose).
9. Remove fuel pump.
10. Remove harmonic balancer.
11. Take weight off engine front insulator, using suitable engine lifting equipment. *Do not use jack under engine oil pan.*
12. Unfasten front engine support from timing chain cover.
13. Remove front four oil pan to timing chain cover screws.
14. Unfasten timing chain cover from block and remove cover.

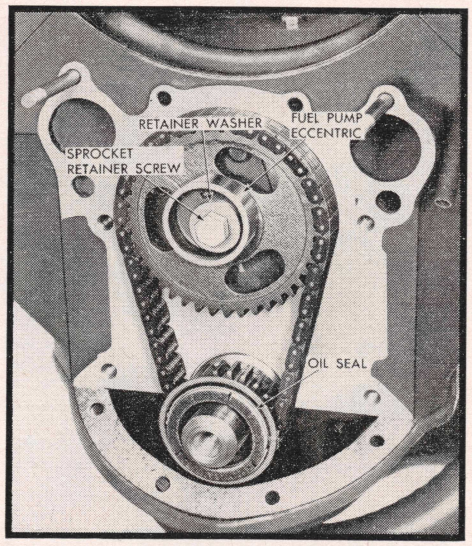

Fig. 30 Front of engine with timing chain cover removed. V8-288, 316, 336, 347 engines

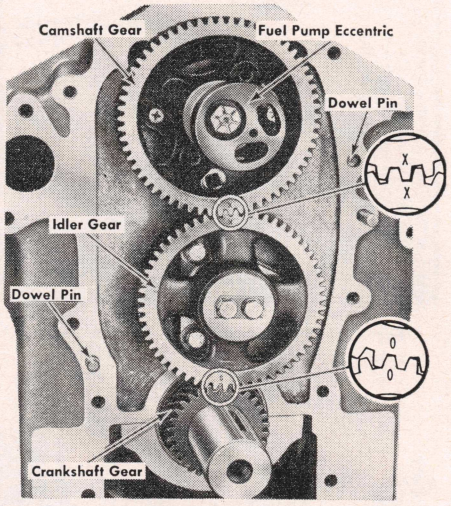

Fig. 30A Timing gears showing timing marks on V6-401, 478, V12-702 engines

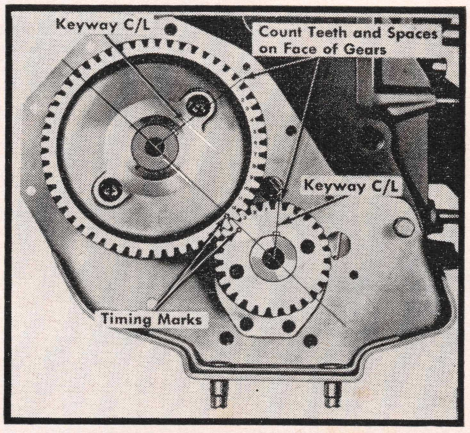

Fig. 31 Location of marks on timing gears. 228, 248, 270, 302 engines

Installation

If a new front oil pan gasket is needed, cement it to the pan. Install new cover seal, Fig. 30, coating seal with graphite lubricant. If a new fuel pump eccentric is to be installed, remove camshaft sprocket retaining screw and washer and remove eccentric. Install new eccentric, indexing pin on eccentric with hole in camshaft sprocket. Insert retainer screw with washer and tighten securely.

After installing the cover, install the four oil pan screws and tighten to 10-12 lb. ft. torque. Loosely install front engine support-to-chain cover screws. Then lower engine and tighten screws to 60 lb. ft. torque.

Complete the balance of the work in the reverse order of removal.

V6-401, 478, V12-702

To remove the cover, drain the cooling system and disconnect lower radiator hose. Disconnect external water by-pass at the intake manifold. Drop the oil pan. Take off radiator, shroud, fan blades, pulleys, vibration damper and fuel pump. Unfasten the cover from the block and lift it off.

TIMING GEARS

V6-401, 478, V12-702

For correct valve timing, the "X" marks on the camshaft and idler gears should be aligned, Fig. 30A, and the "O" marks on the idler and crankshaft gears should be aligned.

228, 248, 270, 302 Engines

For correct valve timing, the marks on the camshaft and crankshaft gear should be matched. If the timing marks are not legible, refer to Fig. 31 for

method of scribing and marking gears with correct timing mark.

The camshaft, together with the gear and thrust plate is removed from the engine as an assembly. When removed, inspect the face of the thrust plate for wear. With a feeler gauge, check the clearance between the hub of the gear and thrust plate, Fig. 32. If the plate is worn or grooved excessively, it should be replaced. As a general rule, a new thrust plate should be used at assembly.

After both timing gears have been installed, check the backlash with a narrow feeler gauge. Correct backlash is .003-.004" when new gears are used. Turn the crankshaft and check the backlash at several points. Specified backlash must exist at all points.

318, 360, 426, 503 Engines

For correct valve timing on these engines, the marks on the camshaft and crankshaft gears should match. If the timing marks are not legible, refer to Figs. 33 and 34 for method of scribing and marking gears with correct timing mark.

If the camshaft is out of the engine, an arbor press may be used to install the timing gear. The tool shown in Fig. 35 should be used to install the gears if the camshaft is in the engine. In either case, install the thrust plate over the end of the camshaft with the part number and trade mark away from the gear. Drive a new key in the camshaft keyway. With the timing mark on the gear facing away from the camshaft, force the gear on the shaft until the hub contacts the front bearing journal shoulder. Check the clearance between the thrust plate and the cheek at the bearing journal with a feeler gauge. Clearance should be .003-.007".

After both gears are installed, check the backlash with a feeler gauge at several points. Backlash with new gears should be .0015-.0035".

TIMING CHAIN

V6-305, V6-351

When chain is properly installed, a straightedge aligned with the center of the crankshaft and camshaft will also be aligned with the timing marks as shown in Fig. 36A. Install fuel pump eccentric at front side of camshaft sprocket. Special washer and bolt (1 and 12, Fig. 36A) are used to retain eccentric and sprocket. Tighten bolt to a torque of 60-70 ft lbs.

V8-288, 316, 336, 347 Engines

To remove the chain, take off radiator and timing chain cover as outlined above. Remove fuel pump eccentric and cover oil seal. Align timing marks, Fig. 36, to simplify proper positioning of sprockets during reassembly. Slide chain and sprockets off ends of camshaft and crankshaft.

Install timing chain and/or sprockets, making sure timing marks on sprockets are aligned exactly on a straight line passing through the shaft centers. Then replace other parts removed.

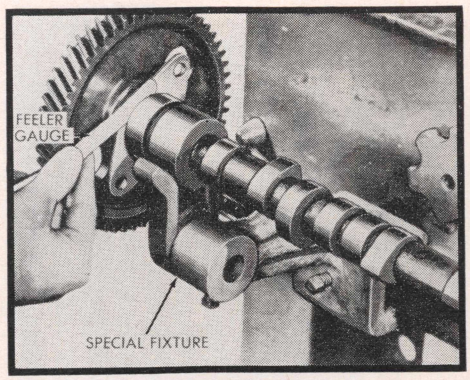

Fig. 32 Checking clearance between camshaft hub and thrust plate. 228, 248, 270, 302 engines

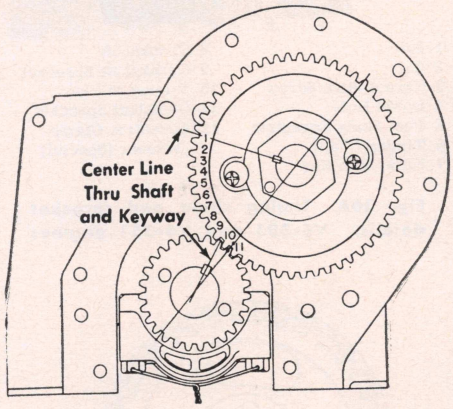

Fig. 33 Location of timing marks. 318, 360 engines

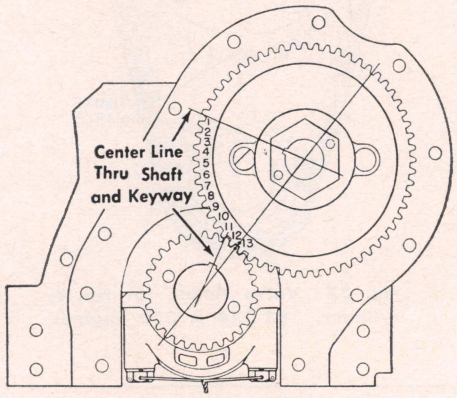

Fig. 34 Location of timing marks. 426, 503 engines

V8-324 & 370 Engines

Remove the chain cover as outlined previously and take off the chain and sprockets as follows: Slide the oil slinger off the front end of the crankshaft. Remove the fuel pump eccentric from the front of the camshaft sprocket. Take off the chain and sprockets.

To assemble, place the chain over the sprockets so that when the camshaft

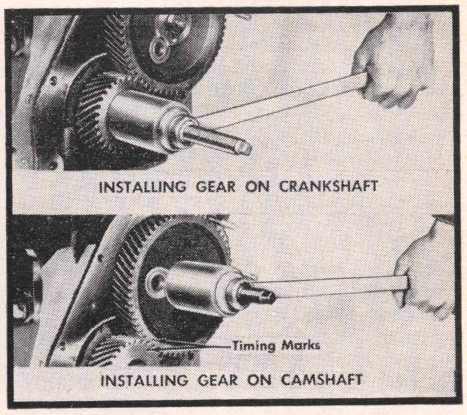

Fig. 35 Installing timing gears. 318, 360, 426, 503 engines

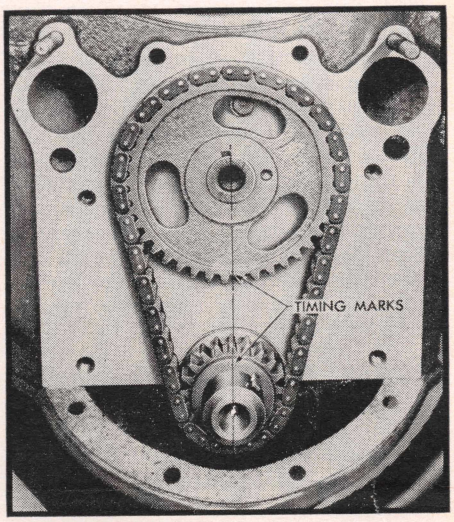

Fig. 36 Valve timing marks. V8-288, 316, 336, 347 engines

sprocket and fuel pump eccentric are bolted to the camshaft hub, the timing marks on both sprockets are facing each other in line with the center of both the camshaft and crankshaft, Fig. 37. The fuel pump eccentric must be assembled with the machined step against the sprocket.

CAMSHAFT & BEARINGS

V6 and V12 Engines

Camshaft is supported on bushing type bearings and all journals are pressure lubricated. An oil trough just below camshaft holds oil into which the cam lobes dip as the camshaft rotates.

To remove the camshaft, remove thrust plate attaching bolts at front end of camshaft. Pull camshaft forward to remove from cylinder block. Remove key from keyway in camshaft, then remove thrust plate and gear spacer.

To install camshaft, apply engine oil to camshaft journals and cam lobes, then install camshaft in block. If spacer has been removed, install spacer with chamfer toward bearing journal and drive key into keyway. Install camshaft thrust plate. Sprocket is installed together with chain.

228, 248, 270, 302 Engines

Four steel-backed, babbitt-lined bearings pressed into the bores of the crankcase support the camshaft. When necessary to install new bearings, be sure the oil holes in the bearings are in line with the holes in the block.

After bearings are installed, lock each bearing by staking it in place with a 9/32" round nose drift through the oil passages between the crankshaft bearings and camshaft bearings, Fig. 38. Holes are provided into which each bearing must be staked to prevent loosening.

Ream camshaft bearings to provide a clearance of .001-.003". After the reaming operation, clean bearings thoroughly, using special care to see that oil holes are clear and free of cuttings.

318, 360, 426, 503 Engines

The camshaft is supported in four bronze bearings which are reamed to size after installation in the crankcase.

If inspection shows that camshaft bearings are loose, worn or burned, bearings must be removed and a new set installed. Mark the position of the oil hole on the front face of each camshaft bearing bore, Fig. 39. This is necessary in order to assure proper alignment of the oil hole in the bearing and oil hole in bearing bore. After bearings are installed, they must be reamed to provide a clearance of .002-.0035".

V8-288, 316, 336, 347 Engines

Removal

1. Drain radiator.
2. Remove intake manifold.
3. Remove crankcase ventilator outlet pipe.
4. Remove push rod cover.
5. Disconnect spark plug wires from plugs.
6. Remove rocker arm covers.
7. Loosen rocker arm ball nuts so that rocker arms can be disengaged from push rods and turned sideways.
8. Remove push rods and hydraulic lifters.
9. Remove timing chain cover, chain, sprockets and related parts.
10. Unfasten and remove camshaft thrust plate.
11. Slide camshaft out of engine carefully, making sure not to damage bearings in block.

Installation

Reverse the removal procedure to install the camshaft. Line up the timing marks on the sprockets and install the chain as shown in Fig. 36. Be sure to adjust the rocker arm ball nuts as outlined under *Valves, Adjust*.

V8-324 & 370 Engines

A thrust plunger and spring is used to control end play of the camshaft. The plunger contacts a pad located on the engine front cover. Two threaded plugs are also added to seal the oil passages.

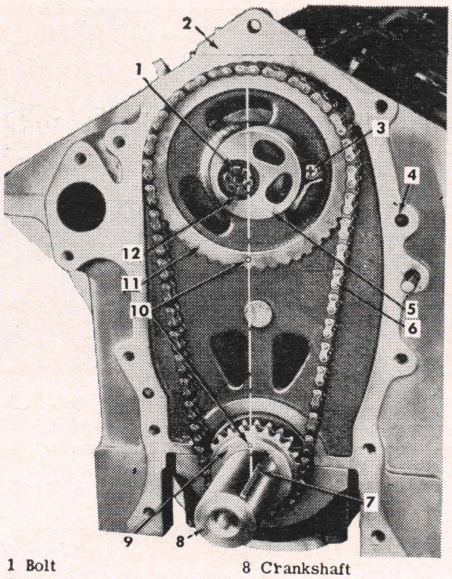

1 Bolt
2 Cap
3 Thrust Plate Screw
4 Dowel Hole
5 Fuel Pump Eccentric
6 Timing Chain
7 Pulley Hub Key
8 Crankshaft
9 Crankshaft Sprocket
10 Timing Marks
11 Camshaft Sprocket
12 Eccentric Clamp Washer (Special)

Fig. 36A Timing chain and sprocket details. V6-305 and V6-351 engines

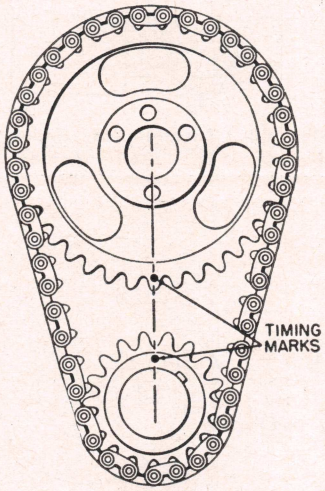

Fig. 37 Valve timing for No. 6 cylinder. V8-324 & 370 engines

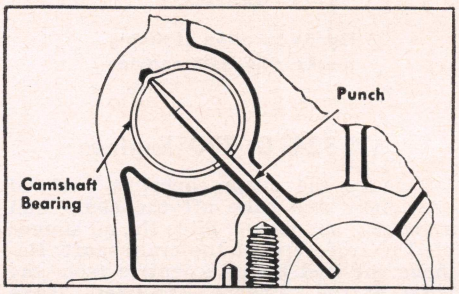

Fig. 38 Locking camshaft bearings in place with punch 228, 248, 270, 302 engines

A small hole is provided in one of the threaded plugs to lubricate the fuel pump eccentric and timing chain.

All camshaft bearings are replaceable, and if clearance is excessive, new bearings may be pressed in place after the camshaft and old bearings have been removed.

Before installing new bearings, see that the oil feed holes are clean and free from sludge and other foreign particles; and when replacing bearings, be sure to line up the holes in the bearings with those of the crankcase to assure adequate lubrication.

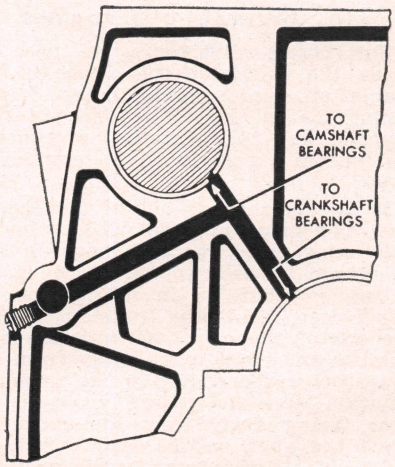

Fig. 39 Showing oil holes in camshaft bearings aligned with oil passages in crankcase. 308, 318, 360, 426, 477, 503 engines

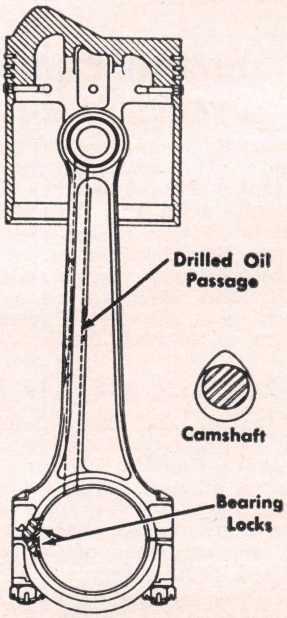

Fig. 40 Assemble piston to rod as shown. 318, 360, 426, 503 engines

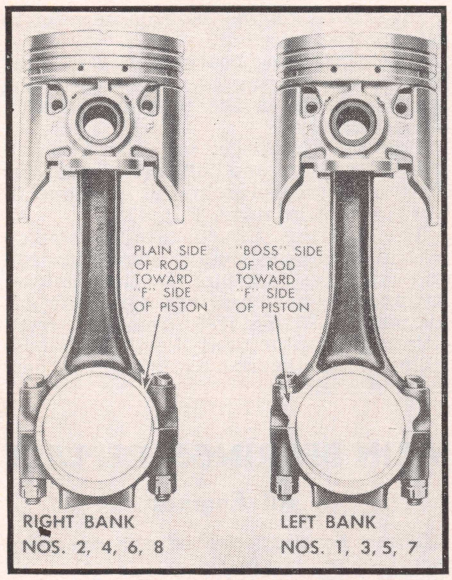

Fig. 41 On V8-288 & 316 engines, assemble piston to rod as shown

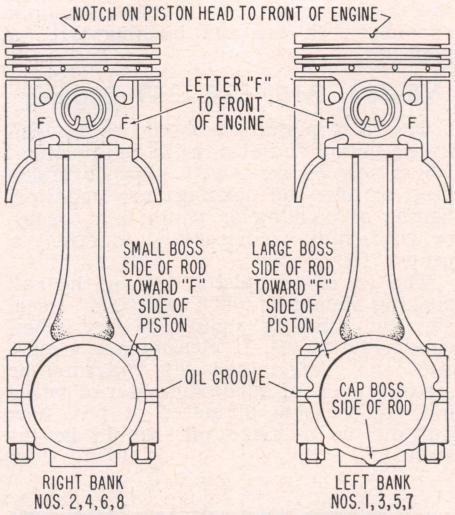

Fig. 41A Pistons assembled to rods. V8-336, 347 engines

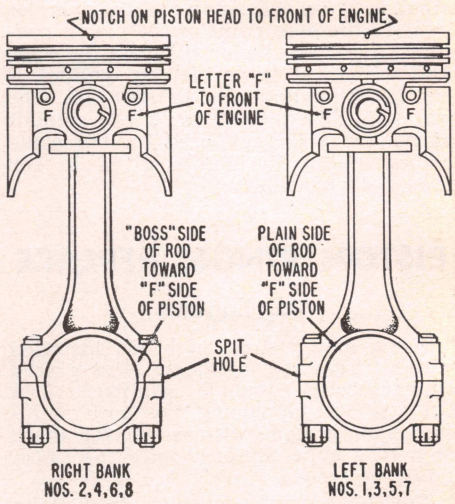

Fig. 41B Pistons assembled to rods. V8-324 engine

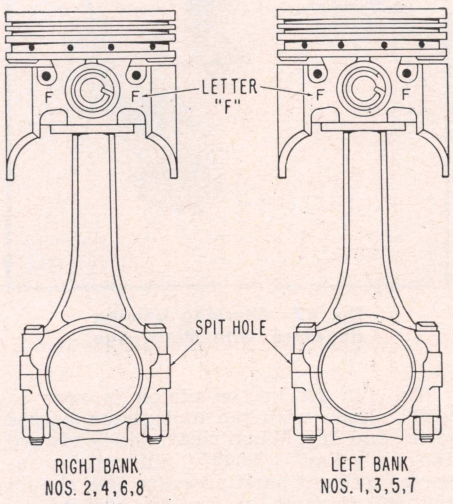

Fig. 41C Pistons assembled to rods. V8-370 engine

To remove the camshaft from these engines, proceed successively as follows:

1. Remove radiator and heater hoses.
2. Remove air cleaner.
3. Remove fuel and vacuum lines.
4. Remove distributor.
5. Remove throttle linkage from carburetor.
6. Remove fan, pulleys and belts.
7. Remove generator, belt & brackets.
8. Remove spark plug wire support.
9. Remove external water by-pass tube.
10. Remove push rod covers, rocker arm assembly and push rods.
11. Remove intake manifold.
12. Remove cylinder block cover.
13. Remove valve lifters and place in numbered rack to keep them clean and so they can be replaced in the same location as removed.
14. Remove upper radiator baffle support.
15. Remove radiator core.
16. Remove vibration damper.
17. Remove fuel pump.
18. Remove exhaust cross-over pipe.
19. Remove steering idler arm.
20. Remove oil pan.
21. Remove front engine mounting.
22. Remove timing chain cover.
23. Remove fuel pump eccentric, timing chain and sprocket.
24. Remove camshaft thrust plate and withdraw camshaft.
25. To replace, reverse sequence of operations, set valve timing and adjust carburetor idle.

PISTONS & RODS, REMOVE

All Engines

After removing the cylinder head and oil pan, examine the cylinder bore above the ring travel area. If the bores are worn so that a ridge or shoulder exists at this point, remove the ridge with a ridge reamer to avoid damaging rings or cracking ring lands of pistons during removal.

Remove the connecting rod caps and push the pistons and rods out of the cylinders, using care to prevent rod bolts from nicking crankshaft journals. Make sure rods and pistons are properly numbered so they can be reinstalled in their proper cylinders. It is advisable to install the caps on the rods as they are removed to avoid mixing parts.

PISTONS & RODS, ASSEMBLE

V6 and V12 Engines

Install piston and rod assembly using care to match the number on the rod and cap. *Numbers for rods on right-hand cylinders must be toward right-hand side of crankcase, while numbers on rods for left-hand cylinders must be toward left-hand side of crankcase.*

228, 248, 270, 302 Engines

Install the pistons in their respective cylinders with numbers on the connecting rods facing the camshaft. When installing the bearing caps to the rods, be sure to have the number on the cap on the same side as the number on the rod.

318, 360, 426, 503 Engines

Insert connecting rod in cylinder bore with the step-head side of piston and drilled oil hole in rod opposite the camshaft side of the cylinder block, Fig. 40.

All V8 Engines

Figs. 41, 41A, 41B and 41C illustrate the correct assembly of pistons to rods.

PISTONS, REPLACE

All Engines

For checking sizes of stock pistons, measurements should be taken with micrometer calipers across the high point of the piston skirt contour, which is across the piston pin support ribs on the piston skirt.

Before any attempt is made to fit new pistons, cylinder bores should be carefully measured, and refinished. Cylinders that are not badly scored but need a "cleaning up" to bring them within satisfactory working limits may be reconditioned with a hone.

A good job should show measurements of not more than .0005" out-of-round or taper. If cylinders are scored badly or out-of-round excessively, they should be bored first with a reliable boring tool and then polished with a hone.

When fitting pistons, use feeler stock of the thickness given in the *Piston & Ring* table. The feeler should be about ½" wide and long enough to extend down into the bore for the full length of the piston. Insert the piston into the bore upside down and place the feeler

stock between the piston and the cylinder wall on the high point of the piston contour. Hook the feeler to a spring scale and withdraw the feeler by pulling it out of the cylinder with the scale. The piston is fitted properly if the amount of pounds pull registered on the scale comes within the limits given in the *Piston & Ring* table.

PISTON RINGS, REPLACE

All Engines

When new piston rings are installed without reboring cylinders, the glazed cylinder walls should be slightly dulled, but without increasing the bore diameter. This is done with a "Glazebuster" or with a hone equipped with the finest grade of stones.

New piston rings must be checked for clearance in piston grooves and for gap in cylinder bores. Cylinder bores and piston grooves must be clean, dry and free of carbon and burrs.

Check the clearance of each ring in its piston groove by installing the ring and then inserting feeler gauges *under* the ring. Any wear that occurs in the piston groove forms a step or ridge at the inner portion of the lower land. If gauges are inserted above the ring, the ring may rest on the step instead of on the worn portion of the lower land, and a false measurement of clearance will result.

If the piston grooves have worn to the extent that relatively high steps or ridges exist on the lower lands, the piston should be replaced because the steps will interfere with the operation of new rings and the ring clearances will be excessive. Piston rings are not furnished in oversize widths to compensate for ring groove wear.

To check the end gaps of rings, place the ring in the cylinder in which it will be used. Square it in the bore by tapping with the lower end of the piston, then measure the gap with feeler gauges. If necessary to increase the gap, file the ends of rings carefully with a smooth file.

PISTON PINS, REPLACE

V6 and V12 Engines

Piston pins are a floating fit in piston bosses and in the connecting rod bushing. Pins are retained by snap rings installed in a groove in each pin boss.

If a new bushing is installed in connecting rod it should be honed to provide a "thumb push" fit of pin in bushing with parts at normal room temperature of 70 degrees.

In-Line Six-Cyl. Engines

Oversize piston pins of .0015", .0025", .005" and .010" are available for service in case pin bore in piston or connecting rod is worn. Use available reaming fixture and expansion reamer and take light cuts until proper oversize is obtained.

When fitted properly, the pin should fit in the piston with a thumb push with the piston pre-heated to 170°. The pin should fit in the rod bushing with a push fit.

V8-288, 316, 336, 347 Engines

The fit of piston pin should be checked in the piston and also in the rod bushing. When new pistons (with pins), oversize pins, or new rod bushings are installed, honing of bushing or piston pin bosses, or both, may be necessary to effect a proper fit.

The fit of the piston pin in the rod bushing should be .0003" to .0005" loose. Pin and bushing should be dry when checking this fit. If clearance is excessive, as determined by micrometer measurement of inside diameter of bushing and outside diameter of pin, new bushing or oversize pin should be installed.

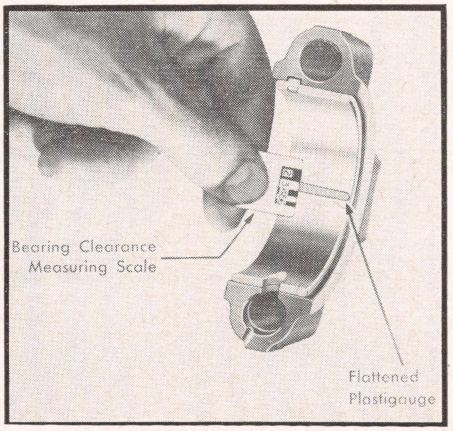

Fig. 42 Checking bearing clearance with Plastigage

The pin fit in the piston is zero to .0002" loose with pin and piston bosses clean and dry. When clearance is toward the high limit (.0002") pin can be inserted by light hand pressure (pin should not fall through by its own weight).

When clearance is toward the low limit (zero) considerable hand pressure will be required to insert the pin. By using a brass drift, pin can be tapped into place with light pressure. Piston and pin must be at room temperature when checking fit.

V8-324 & 370 Engines

Piston pins are available in standard, .001" and .003" oversizes. If necessary, reaming and honing of the piston pin hole for the installation of oversize pins are satisfactory. The fit of the pin in the piston should be a tight hand push. If considerable hand pressure is required, the pin may be tapped in place with a hammer and brass drift. It is very important that both the pin and piston pin hole be clean and free from oil.

ROD BEARINGS, REPLACE

All Engines

These bearings are of the precision insert type, requiring no reaming or scraping. The bearings are designed for use without shims and under no circumstances should shims be used in order to affect an adjustment.

When installing bearings, be sure that back of the bearing shells as well as the bearings seats in the rods are smooth, clean and dry.

Bearing clearance may be checked with Plastigage and full instructions for its use is furnished in the envelope in which it is contained, Fig. 42.

The bearing inserts are assembled with a slight projection above the rod and cap faces to insure positive contact. Always use new bearings for wear adjustments. If metal is removed from either the cap or face, it will be impossible to use the rod again with a new bearing shell.

MAIN BEARINGS, REPLACE

All Engines

These bearings are of the precision insert type requiring no reaming or scraping. They may be removed and replaced without taking out the crankshaft. Like the rod bearings, main bearings may be checked with Plastigage. Be sure the bearings are smooth and clean on both sides. This applies to the bearing seats as well.

When all the cap bolts are tightened, the crankshaft must turn freely. If it does not, loosen the cap bolts one at a time and try turning the crankshaft to determine which bearing is causing drag. To remedy the condition, replace the tight bearing halves, or, if necessary, lap the crankshaft bearing journal to provide the necessary clearance.

CRANKSHAFT END PLAY, ADJUST

All Engines

Through normal wear end play will seldom become excessive but whenever new bearings are fitted, check the end play by forcing the crankshaft back to the limit of its end play with a pry bar and check the clearance with a feeler gauge between the thrust bearing flange and crankshaft cheek.

If end play is less than .003", the bearing flanges may be dressed down to obtain the desired result. End play in excess of .008" calls for the installation of new thrust bearing shells.

CRANKSHAFT OIL SEAL, REPLACE

228, 248, 270, 302, V8-324, V8-370, V6 and V12

Crankshaft rear bearing oil seal consists of two pieces of special packing. One piece is installed in the groove in the rear bearing cap and the other piece is installed in a similar groove in the cylinder block.

Position the rear bearing seal in the groove in the cylinder block. Lay an improvised mandrel, Fig. 43 in the bearing bore and strike the mandrel with a hammer to drive the seal into the groove.

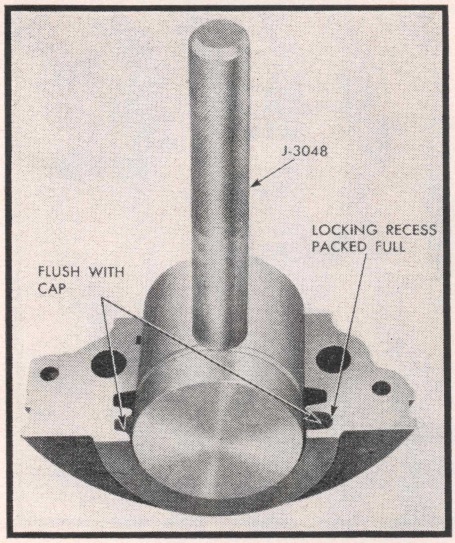

Fig. 43 Compressing oil seal in rear main bearing cap

Install the seal in the bearing cap in a similar manner. Using a sharp knife, cut off both ends of each seal which project out of the grooves. When cutting off the ends of the seals, do not leave frayed ends which would prevent proper seating of the bearing cap if the ends should extend between cap and cylinder block.

318, 360, 426, 503 Engines

The crankshaft rear oil seal for these engines consists of a leather ring held in close contact with the outer face of the flywheel flange by a spring. The spring-loaded leather seal, with the aid of the oil slinger at the rear bearing, effectively prevents leakage of oil at the rear of the crankshaft.

The seal is pressed into the retainer which is securely bolted to the rear of the crankcase. Whenever the engine is disassembled, the seal should always be renewed regardless of its condition.

The oil seal is readily accessible after the flywheel is removed. Remove the seal and retainer as a unit, then take the seal from the retainer.

Install the new seal, making sure it is square with the hole in the retainer as it is being pressed in place. A special tool consisting of two flat plates and a thrust screw is available to press the seal evenly in the retainer.

Removal, V8-288, 316, 336, 347 Engines

1. Drain oil and remove pan.
2. Remove oil pump and pump drive shaft.
3. Remove oil baffle and cylinder block-to-oil baffle tube (lower oil level indicator tube).
4. Remove transmission.
5. Remove rear center main bearing cap and upper half of its bearing shell. *This will eliminate danger of damaging thrust surfaces of bearing and will also allow crankshaft to be lowered more easily.*
6. Remove rear main bearing cap and loosen remaining bearing caps sufficiently to allow crankshaft to be lowered approximately 3/8" at the rear.
7. With crankshaft lowered to provide clearance, remove upper half of rear main bearing oil seal.

Installation

1. Install seal in cap with one end flush with cap, using a suitable hammer and seal compressor.
2. Remove seal from cap and install in block by slipping it up over crankshaft into seal cavity of block. Insert end which was flush with cap first.
3. Install rear main bearing cap with bearing shell and tighten to 95 lb. ft. torque to pull crankshaft up into place against seal.
4. Take off cap and trim both ends of seal flush with block.
5. Install a new seal in the cap, pack and trim as shown in Fig. 43.
6. Install cap with bearing shell and tighten to 120 lb. ft. torque.
7. Remove bearing cap again and inspect the split line between cap and block to be certain that none of the seal material has been compressed between the two. If it has, scrape it off to insure proper seating of metal surfaces.
8. Reinstall cap and tighten to 120 lb. ft. torque.
9. Reinstall center main bearing and cap and torque to 95 lb. ft.
10. Reinstall other parts removed.

OIL PAN, REPLACE

V6, V12 and In Line 6's

Drain the oil, remove the oil pan attaching screws and lower the pan.

V8-288, 316, 336, 347 Engines

Drain the oil from the pan. Disconnect the exhaust crossover pipe from both manifolds and exhaust pipe. Remove pipe by shifting it around to a position where it will come out without forcing.

Remove the two rear oil pan screws which retain the flywheel housing front shield to the cylinder block. Remove the four screws which retain the shield to the flywheel housing and remove the shield.

Remove flywheel housing lower cover. Loosen crankcase ventilator outlet pipe brace clamp and swing the brace out of the way. Remove the attaching screws and drop the pan.

Reverse the foregoing procedure to install the pan. However, the rear main bearing cap gasket should be removed from its groove in the cap, the groove cleaned thoroughly and a new gasket installed. Apply gasket cement to the groove before installing the gasket.

V8-324 & 370 Engines

To remove the pan take off the starting motor and exhaust crossover pipe (if used). Remove the attaching screws and lower the pan.

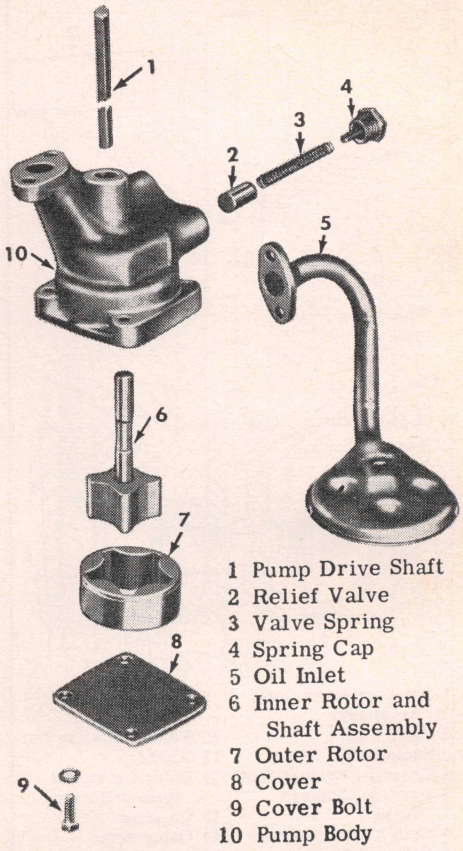

Fig. 43A Oil pump on V6-305 and V6-351 engines

OIL PUMP REPAIRS

V6-305, V6-351

After removing the oil pan, remove oil inlet pipe and screen from pump. Remove two bolts attaching oil pump to cylinder block, then remove pump and drive shaft. Disassemble pump as suggested by Fig. 43A, then inspect parts as follows:

1. Inspect ends of drive shaft which engage distributor and oil pump shafts. Replace shaft if excessively worn or damaged.
2. Check fit of inner rotor shaft in body. If excessive wear is indicated at either shaft or body, replace worn parts.
3. Place outer rotor in body and insert inner rotor and shaft in operating position. Check clearance between outer rotor and body and clearance between edge of inner rotor lobe and outer rotor with feeler gauge; if clearance exceeds .006", replace worn parts.
4. With rotors in pump body, place straightedge across rotors and body; then with feeler gauge measure clearance between rotors and straightedge, which should be .0011-.0034".
5. Use straightedge to check rotor side of pump cover for flatness. Also look for grooves and other evidence of wear on cover. Replace cover if not in good condition.

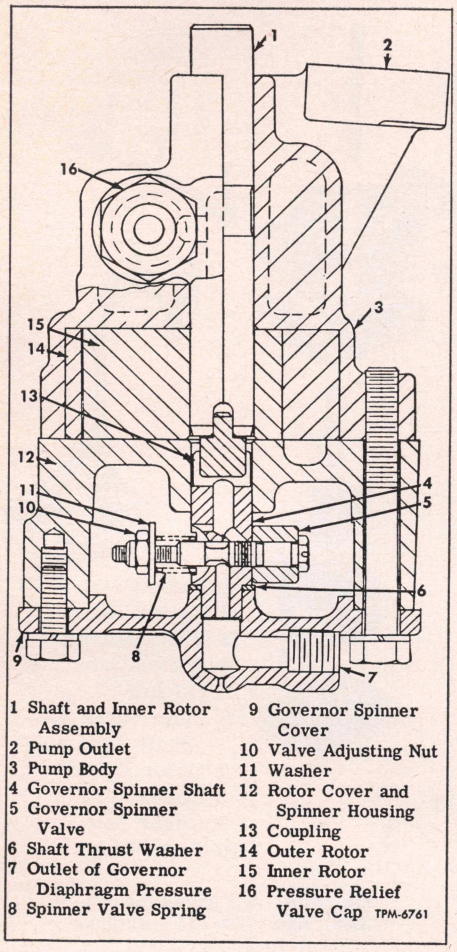

Fig. 43B Oil pump and governor spinner valve. V6-401, 478, V12-702 engines

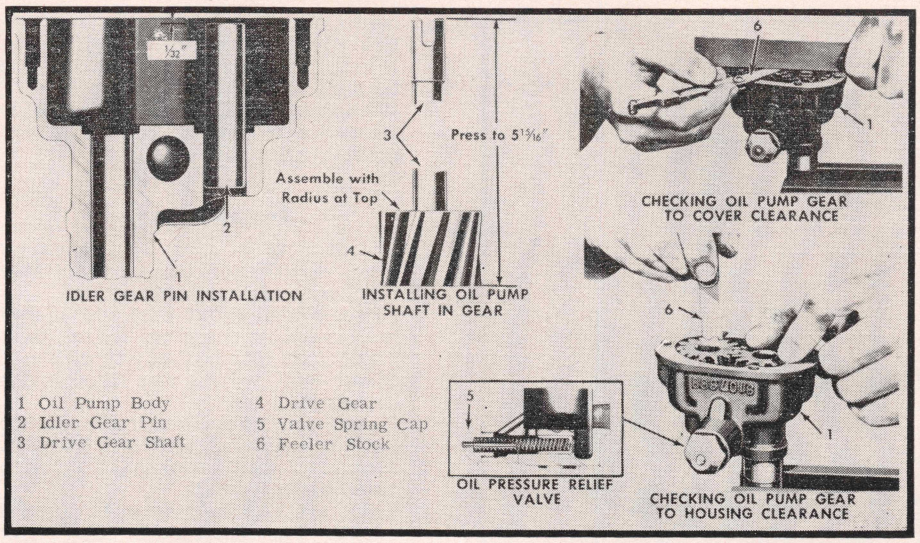

Fig. 44 Oil pump service details. 228, 248, 270, 302 engines

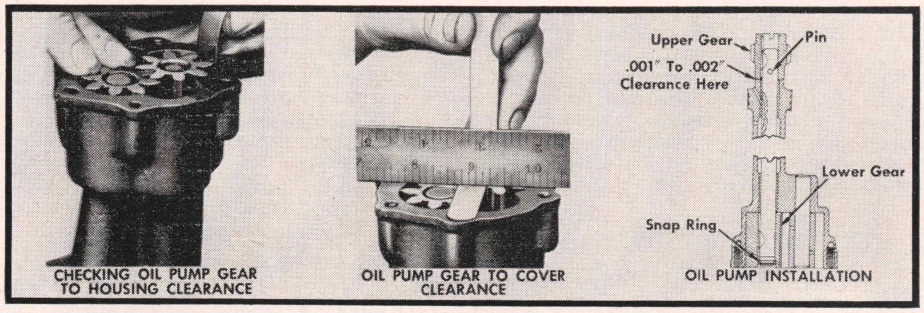

Fig. 45 Oil pump service details. 318, 360, 426, 503 engines

6. Relief valve spring should have 14.7 to 16.3 lbs pressure when compressed to 1.69". Spring free length should be 2.72".

V6-401, 478, V12-702

After removing the oil pan and oil pump, disassemble the pump as follows, referring to Fig. 43B.

Remove bolts that secure spinner valve cover, rotor cover and spinner housing to pump body and separate parts. Remove outer rotor and shaft and inner rotor from pump body. Remove relief valve spring cap, then remove spring and valve.

Inspection of Parts — Inner rotor and shaft assembly and outer rotor are furnished for service in matched sets. With rotors in pump body, place a straightedge across rotors and body and measure clearance with feeler gauge. Clearance should be .0011-.0064".

Use feeler gauge to check rotor side of rotor cover and spinner housing for flatness. Also look for grooves and other evidence of wear on pump cover.

Clean relief valve parts and check fit of valve in bore of pump. Valve must slide into bore smoothly.

Check fit of spinner valve shaft in cover and spinner valve housing in

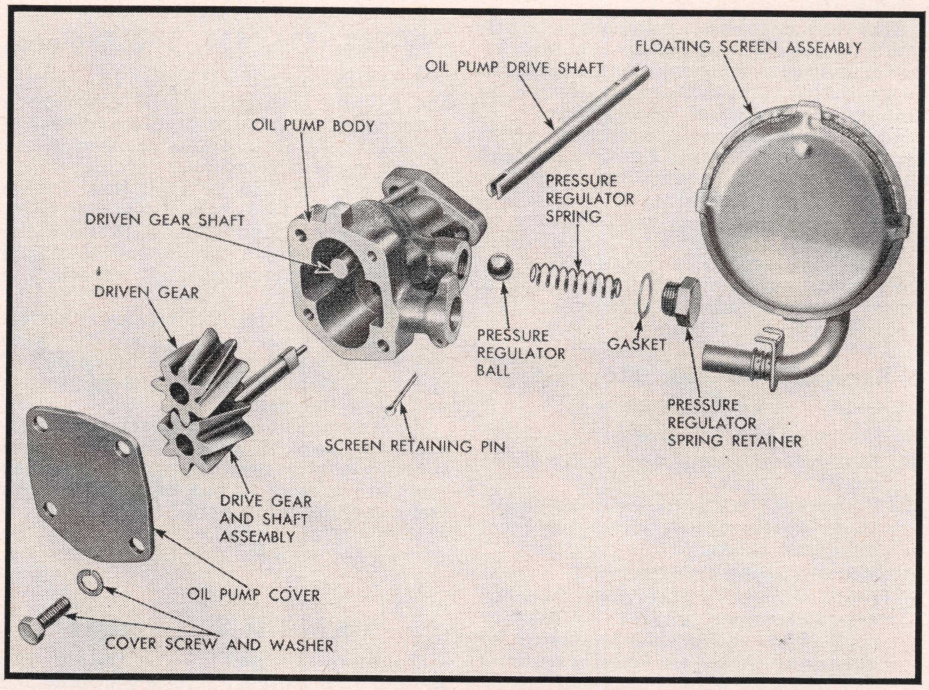

Fig. 46 Oil pump. V8-288, 316, 336, 347 engines

cover. If excessive clearance is evident, replace parts as necessary. Inspect thrust washer for wear. Clean passages through spinner shaft and passages including bleed hole in spinner cover.

Soak spinner valve and shaft in solvent, then note fit of valve in shaft. It should be possible to push valve endwise, and spring should move valve to closed position. If valve sticks or appears to be loose in shaft, obtain a new preadjusted valve assembly for use when reassembling pump unit *Since special equipment is required for testing spinner valve operation, the valve adjustment should not be disturbed.*

Assembling Pump and Spinner Valve—

1. Install pressure relief valve parts in pump body in following order: valve, spring and spring cap. Tighten cap securely.
2. Lubricate shaft and inner rotor with engine oil and insert shaft into pump body.
3. Install outer rotor in body, then try turning inner rotor and shaft. Shaft must rotate without drag for six or more revolutions.
4. Install rotor cover and spinner housing and retain with two short self-locking bolts.
5. With oil pump inverted, drop coupling into slot in end of pump shaft. Set spinner valve and shaft in place at coupling, then place thrust washer on shaft and install governor spinner cover.

Six-Cyl. Engines

Conventional gear type oil pumps are used in these engines. After removing the oil pan, the pump is accessible. In servicing the pump, follow the suggestions illustrated in Figs. 44 and 45.

Before removing the oil pump on 308 and larger engines, turn the engine over to bring No. 1 piston up to the firing position, noting the position of the distributor rotor. Do not disturb the distributor position while the pump is off the engine.

Before installing the pump on 308 and larger engines, see that the distributor is still in the No. 1 firing position. After the pump is installed, reset the ignition timing.

V8-288 & 316 Engines

Remove oil pan. While holding pump in place, remove attaching screws. Lower the pump away from the block with one hand while removing the oil pump drive shaft with the other.

Remove oil screen and pressure regulator parts. Detach cover from pump body and take out gears, Fig. 46.

Examine all parts for damage and assemble. Do not attempt to change oil pressure by varying length of pressure regulator spring.

To install, position drive shaft in distributor and oil pump drive gear. Place pump in position in the block, indexing the drive shaft with pump drive gear shaft. Install attaching screws with lock washers and tighten securely.

Removal and installation of pump does not affect distributor timing since the oil pump and distributor drive gear are mounted on the distributor shaft.

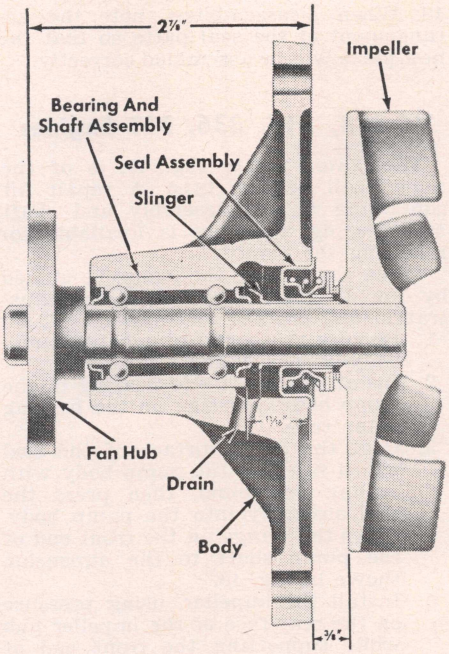

Fig. 46A Light duty water pump. V6-305 and V6-351 engines

V8-324 & 370 Engines

The positive gear type oil pump is attached to the rear main bearing cap by three bolts and can be removed without disturbing any of the drive mechanism.

To disassemble the pump, release lock wire and remove screen. Take off the oil screen shroud and remove the snap ring from the extension shaft coupling. Remove the oil pump cover and take out the gears. Remove oil pressure regulator nut, spring and valve.

WATER PUMP, REPLACE

228, 248, 270, 302 Engines

1. Drain cooling system.
2. Remove fan belt.
3. If engine is equipped with air compressor, loosen idler pulley mounting bolt to permit belt removal. Remove belt and idler pulley bracket.
4. Remove heater, by-pass fittings, or air compressor water lines (if used) from thermostat housing and water pump.
5. Remove hose from water outlet and from water pump inlet.
6. Remove thermostat housing.
7. Unfasten and remove water pump and fan. *The bolt with the screwdriver slot cannot be removed from pump until pulley has been removed.* In some cases the pump may be removed easier if the fan blades are taken off the pump before removing the pump from the engine.
8. Reverse the foregoing to install the pump.

318, 360, 426, 503 Engines

1. Drain cooling system.
2. Remove fan blades and spacer (if used). If truck is equipped with a fan shroud, place blades in shroud.
3. If air compressor is used, loosen swivel bolt nut at bottom of air compressor, then remove cap screw in slotted support which attaches support to pump.
4. Move compressor toward engine and remove drive belt.
5. Loosen cap screw in slotted arm at generator. Loosen pivot bolts at bottom of generator support bracket, then remove cap screw which attaches adjusting arm to water pump.
6. Swing generator toward engine and remove drive belts.
7. Loosen clamps on by-pass hose.
8. Disconnect inlet tube at water pump and discard gasket. Disconnect heater hose (if used).
9. Unfasten and remove water pump from engine block.
10. Reverse the foregoing procedure to install the pump.

V8-288, 316, 336, 347 Engines

To remove the pump, drain the cooling system. Remove fan belt, fan and pulley. Unfasten the pump from the block and lift it off.

Install the pump in the reverse order. When pump is installed, drain hole will be at the bottom.

V8-324 & 370 Engines

To remove the pump take off the fan and pulley. Unfasten the pump from the block and lift it off.

When installing the pump, one side of the pump bearing housing gasket should be coated with gasket cement. The four bearing housing bolt threads should be dipped in a suitable sealer.

WATER PUMP REPAIRS

V6 and V12 Engines

Light Duty Water Pump, Fig. 46A— When disassembled, clean and inspect pump body and impeller. Shaft and bearing assembly and seal must be replaced whenever pump is disassembled. Surface contacted by seal on impeller hub must be smooth and flat. To assemble pump, first be sure bore through pump body is clean and free from burrs.

1. Install shaft and bearing assembly in pump body, pressing on bearing outer race. Proper location of bearing and shaft is indicated in Fig. 46A. Measure from rear face of body to bearing as shown ($\frac{11}{16}$").
2. Coat outer surface of seal which fits into pump body with sealing compound, then press seal into body.
3. Press flange on front end of pump shaft to the dimension shown (2⅞").
4. Install impeller on rear end of pump shaft, using pressure on rear face of impeller hub while supporting front end of shaft. Locate impeller so a space of ⅜" exists between impeller and pump body.

Heavy Duty Water Pump, Fig. 46B— When disassembled, clean and inspect pulley and impeller. Use new seal and shaft and bearing assembly when reassembling pump. If surface contacted by

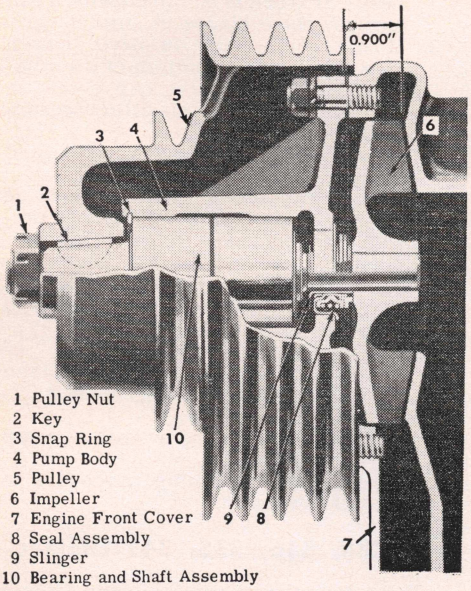

Fig. 46B Heavy duty pump. V6-401, 478, V12-702 engines

seal at impeller hub is not smooth and flat, install new impeller. To assemble pump, proceed as follows:

1. Support pump body at mounting flange and press on bearing outer race to install bearing and shaft assembly. *Press bearing into body only far enough to permit installation of snap ring.* Front edge of bearing to be $3\frac{11}{16}$" from rear face of body flange.
2. Install snap ring in groove in body. Coat outer surface of seal which fits into pump body with sealing compound, then press seal firmly into body.
3. Support front end of pump shaft and press impeller onto rear end of shaft to .900" dimension shown in Fig. 46B. Measure from outer edge of impeller blade to surface of body flange.
4. Install key in slot in shaft. Install pulley and retain with self-locking nut.

228, 248, 270, 302 Engines

The pump used on these engines, Fig. 47, is of the sealed ball bearing type packed with lubricant at the time of manufacture. When disassembling, carefully note the arrangement of the seal parts so that correct assembly may be assured.

Never soak the shaft and bearing assembly in cleaning solvent because it will dissolve the lubricant. To clean the shaft and bearing, merely moisten a cloth in cleaning fluid and wipe away any surplus lubricant or other foreign matter.

Be sure the face of the housing against which the seal washer turns is smooth and free of scores.

318, 360, 426, 503 Engines

The pumps used on these engines are of the removable ball bearing type, Fig. 48. When disassembling, note the arrangement of the seal parts so that the new parts will be assembled correctly.

V8-288, 316, 336, 347 Engines

The water pump, Fig. 49, is of the sealed ball bearing type. A repair kit containing a seal assembly and shaft and bearing assembly is available for repairing the pump.

When assembling the pump, be guided by the dimensions shown in the illustration and proceed as follows:

1. Be sure the bore through the pump body is smooth and clean.
2. Install the shaft and bearing in the pump body, pressing on the bearing outer race.
3. Coat the outer surface of the seal which fits into the pump body with sealing compound, then press the seal assembly into the pump body.
4. Press the flange on the front end of the pump shaft to the dimension shown in Fig. 49.
5. Install the impeller, using pressure on the rear face of the impeller hub while supporting the front end of the shaft. Locate the impeller as shown in the illustration.

V8-324 & 370 Engines

The water pump double row bearing has one large groove in the center and two smaller grooves toward one end. The end with the two smaller grooves must always be assembled into the pump housing first. This end of the bearing shaft will then be at the impeller end of the pump.

To assemble the pump, press the seal into the housing. Press the bearing into the housing until the bearing seats on shoulder in housing. Install the bearing retainer spring at the front end of the housing. Support the impeller and press the bearing shaft through the impeller until the bottom edge of the vanes are 13/16" from the machined face at edge of housing.

RADIATOR, REPLACE

Conventional Models 1000 Thru 5000

1. Unfasten fan shroud (if used) from radiator. Position shroud back over fan blade.
2. Disconnect hoses at radiator. If necessary, remove hoses and hose connection pipes.
3. Unfasten radiator from its support and lift out radiator.

Models P1500 and P2500

1. Jack up and block front of vehicle approximately 10" from floor. Radiator with its support is removed as a unit as follows:
2. Remove grille and stone shield.
3. Remove capscrew which attaches frame bracket to radiator support at each side.
4. Inside vehicle under dash, remove closure paneling and disconnect radiator filler tube.

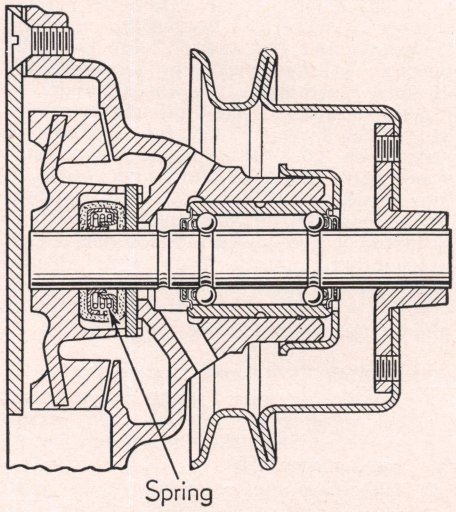

Fig. 47 Sealed ball bearing type water pump. 228, 248, 270, 302 engines

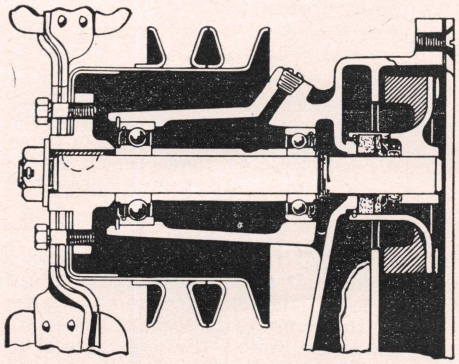

Fig. 48 Typical removable ball bearing type water pump. 318, 360, 426, 503 engines

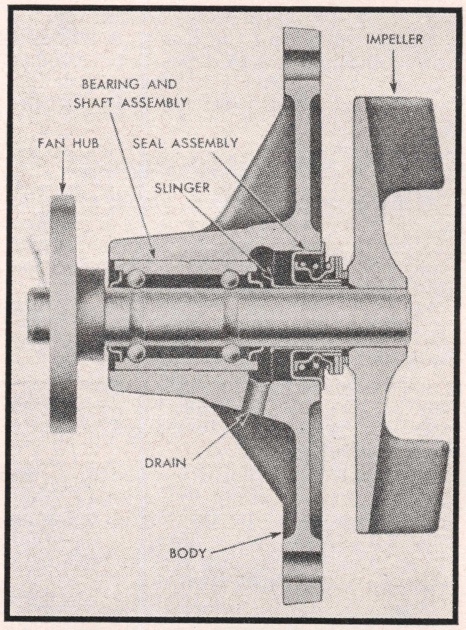

Fig. 49 Water pump. V8-288, 316, 336, 347 engines

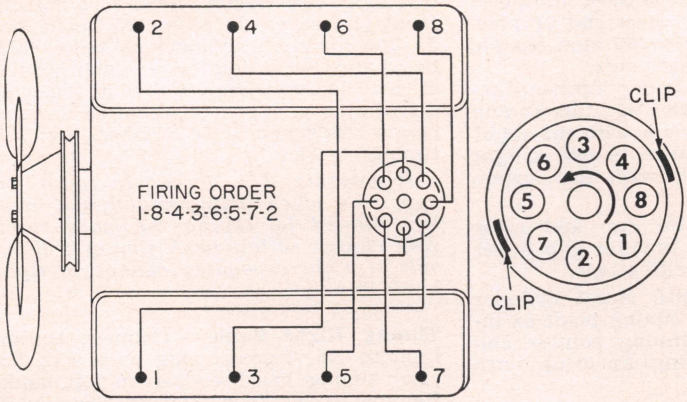

Fig. 50 Ignition details. V8-288, 316, 336, 347 engines

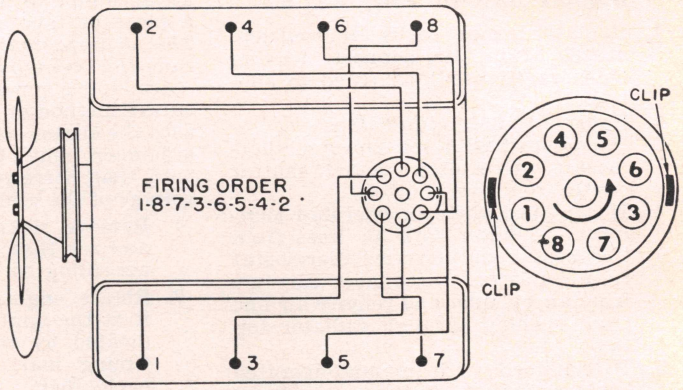

Fig. 51 Ignition details. V8-324, 370 engines

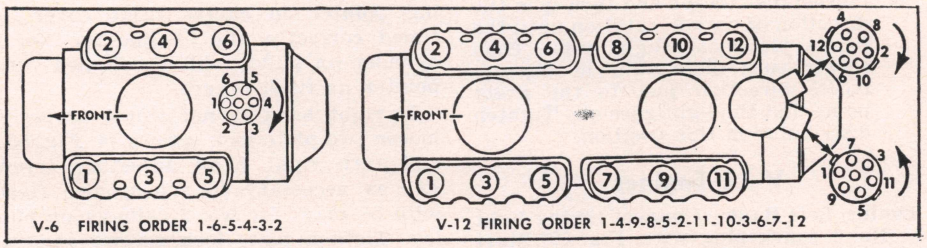

Fig. 52 Ignition details. V6 and V12 engines

5. Remove two nuts and springs from radiator support hold-down U-bolt. Push U-bolt up through frame crossmember.
6. With aid of an assistant, carefully lower radiator with support forward of front crossmember.
7. When installing, tighten support U-bolt nuts until springs are compressed to a length of $1\frac{1}{16}''$.

"B" Models 4000 and 5000

1. Remove hood center and side panels as a unit.
2. Remove radiator support top diagonal rod. *Do not move inner nut at radiator end of rod which will assure proper alignment when reinstalled.*
3. Disconnect and remove radiator hoses and connecting tube.
4. Unfasten fan shroud from radiator. Position shroud rearward and to right to clear air compressor (if equipped).
5. With an assistant or a hoist to retain radiator safely, unfasten radiator from support and lift out radiator.

"L" Models

1. Tilt cab forward, then remove or position engine controls over radiator to one side to permit removal of radiator.
2. Disconnect upper and lower hoses at radiator.
3. Detach radiator side flange from radiator support.
4. Move radiator forward and carefully raise it from vehicle.

Models 100 to 500

1. Remove water hoses.
2. On diesel models, disconnect air supply lines at radiator shutter thermostat.
3. Unhook wiring harness from clips on radiator support crossbar.
4. Remove radiator upper baffle extension.
5. Remove radiator support crossbar.
6. Unfasten radiator support from its mounting and lift it out. On diesel models, remove fan shroud.
7. Reverse procedure to install.

Models 520 to 980, Conventional

1. Remove hood and grille.
2. Disconnect wiring at right-hand junction block.
3. Unclip loom from radiator shell.
4. If equipped with air-operated shutters, disconnect air feed line at shutter thermostat. If equipped with manual shutters, disconnect cable and conduit from trunnion and clamp at radiator.
5. Remove radiator tie rod and radiator-to-dash brace rods.
6. Unfasten radiator from its support.
7. Remove water hoses.
8. Remove radiator with shell and shutters as a unit from the chassis. Note number of shims (if any) used at support U-bolt.
9. Install in reverse order, being sure to replace shims found at support U-bolt.

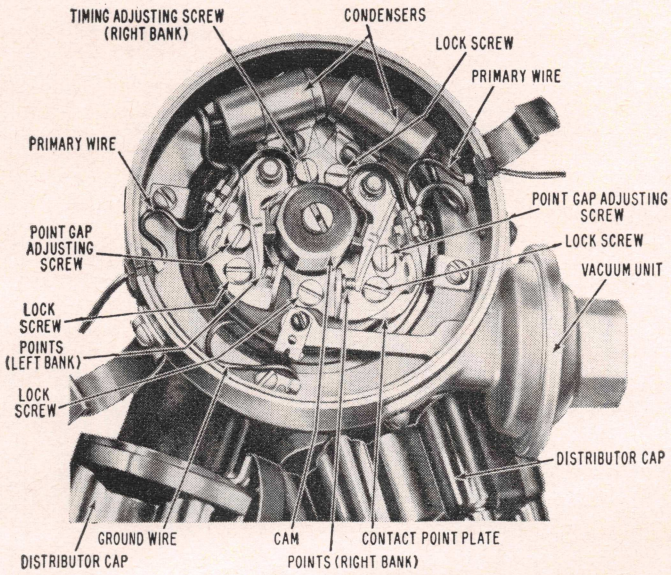

Fig. 53 V12 ignition distributor with cover removed

Models 520 to 980, C.O.E.

1. Radiator is most easily removed separately from its support, leaving shutters (if used) attached to support.
2. Remove radiator top baffle.
3. If equipped with self-powered thermostat type shutter, detach shutter control rod from shutter.
4. If equipped with air-operated shutters, disconnect both air lines from thermostat and unscrew thermostat from radiator. Disconnect air line from air cylinder and remove air line from opening through radiator top tank.
5. If equipped with manual-operated shutter, detach shutter control rod from shutter. Disconnect cable and conduit from trunnion and clamp at radiator.
6. On all models, remove water hoses and radiator outlet elbow.
7. Remove radiator support crossbar.
8. Remove fan shroud (if used).
9. Lift radiator from vehicle.
10. Reverse procedure to install.

IGNITION TIMING

All Except V-12's

If a timing light is to be used to set ignition timing, disconnect the vacuum advance pipe to the carburetor and place a piece of tape over open end of pipe. *This is important as carburetor trouble can affect timing adjustments.*

Lacking a power timing light, an accurate method of setting ignition timing with the engine stopped is with the aid of a jumper light. Be sure to use a light bulb that corresponds with the system voltage of the vehicle.

1. Remove distributor cap and rotor and see that the breaker gap is set according to specifications.
2. Rotate engine until No. 1 cylinder it at the ignition timing point as indicated by the timing pointer and timing mark being lined up with each other.
3. Connect the jumper light between distributor ignition terminal and ground.
4. Turn on ignition switch.
5. Loosen distributor and turn it in the direction of normal rotation until the points just close (light out). Then slowly turn distributor in the opposite direction just to the exact point that the light goes on. Tighten distributor in this position.

V-12 Engines

Timing Left Bank—Connect timing light to No. 1 spark plug wire, Fig. 52. Start engine and run at idling speed while directing light beam toward pointer in front end cover. If correctly timed, the 5° line for No. 1 cylinder on pulley will be aligned with pointer as flash occurs. If not, loosen clamp screw at base of distributor and turn distributor as necessary to synchronize flashes with 5° timing mark.

Important: The foregoing must be done first when timing engine and must be followed by timing the right bank. Any change in left bank timing will result in a corresponding change in right bank timing.

Timing Right Bank — Connect timing light to No. 2 spark plug wire, Fig. 52, after timing has been set on left bank. Remove cover from top of distributor to expose distributor points and adjusting screws, Fig. 53.

Start engine and run at idle speed while directing light beam toward timing pointer on engine front cover. If timed correctly, the 5° line for No. 2 cylinder on pulley will be aligned with pointer as flash occurs.

If right bank is not timed properly, loosen two plate lock screws (4, Fig. 53) and turn right bank adjusting screw (2) as necessary to synchronize flash with 5° mark for No. 2 cylinder on pulley. Tighten plate lock screws and install distributor cover.

Carburetor & Governor Section

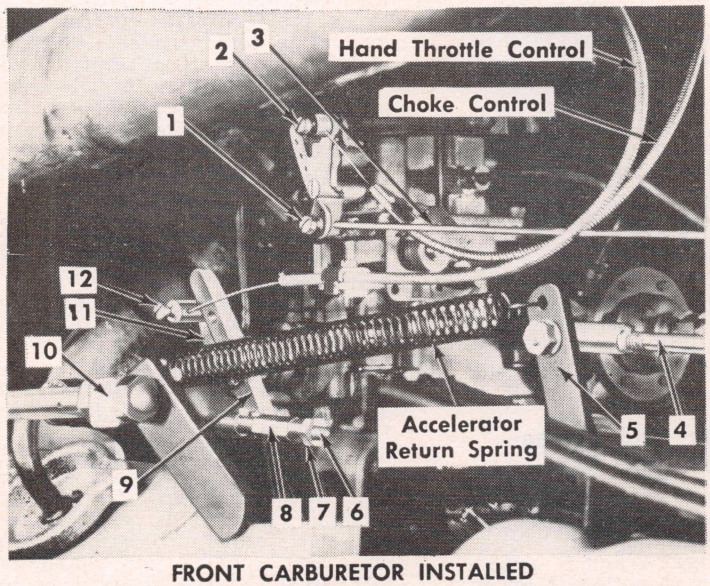

FRONT CARBURETOR INSTALLED

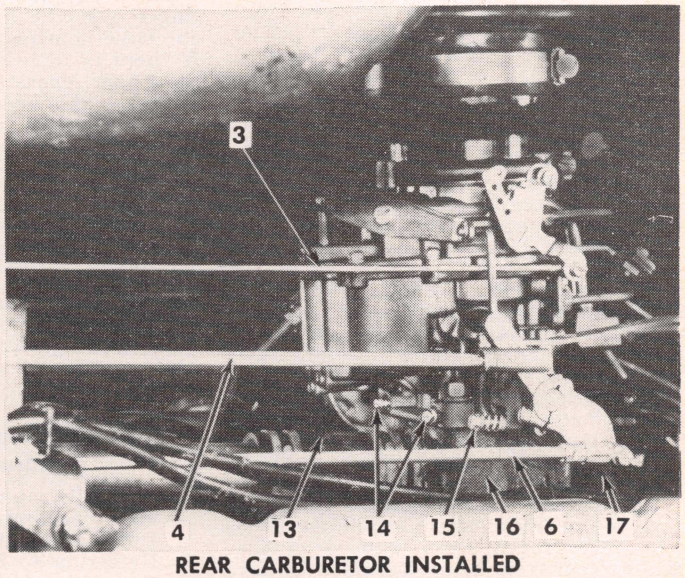

REAR CARBURETOR INSTALLED

"L" MODEL VEHICLES

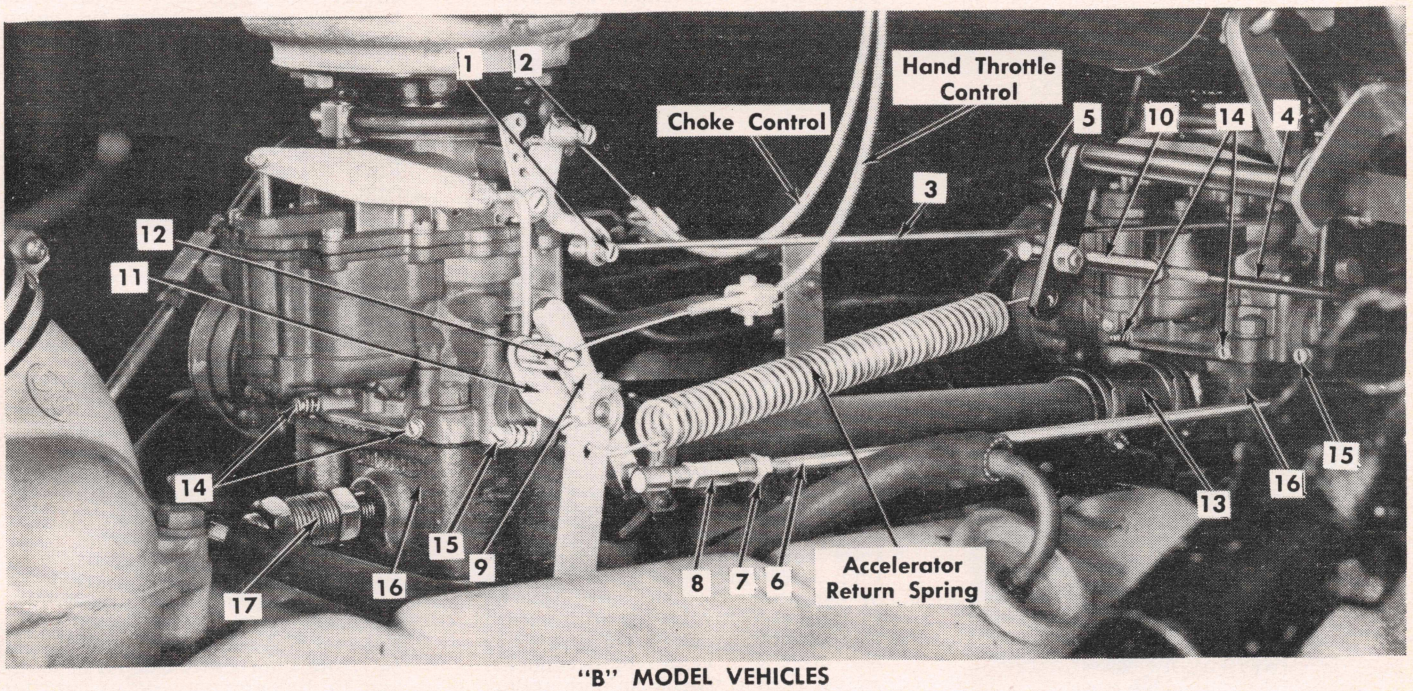

"B" MODEL VEHICLES

1 Clamp Screw (Choke Link)
2 Clamp Screw (Choke Control)
3 Choke Interconnecting Link
4 Accelerator Control Rod Assy.
5 Accelerator Idler Lever Assy.
6 Throttle Interconnecting Link Assy.
7 Lock Nut
8 Hex Turnbuckle
9 Throttle Shaft Lever
10 Accelerator Linkage Adjustment Point
11 Hand Throttle Lever
12 Clamp Screw (Hand Throttle)
13 Balance Tube Hose
14 Idle Mixture Screw
15 Idle Stop Screw
16 Carburetor Spacer
17 Crankcase Ventilator Valve Assy.

Fig. A Carburetor and linkage adjustments on V12 engines

Performance Complaints

Flooding, stumble on acceleration or other performance complaints are in many instances caused by the presence of dirt, water or other foreign matter in the carburetor. To aid in diagnosing the cause of the complaint, the carburetor should be carefully removed from the engine without draining the fuel from the bowl. The contents of the fuel bowl may then be examined for contamination as the carburetor is disassembled.

Check the fuel in the bowl for contamination by dirt, water, gum or other foreign matter. A magnet moved through the fuel in the bowl will pick up and identify any iron oxide dust that may have caused intake needle and seat leakage.

Inspect gasketed surfaces between body and air horn. Small nicks or burrs should be smoothed down to eliminate air or fuel leakage. On carburetors having a vacuum piston, be especially particular when inspecting the top surface of the inner wall of the bowl around the vacuum piston passage. A poor seal at this location may contribute to "cutting-out on turns" complaint.

Fill the carburetor bowl with clean fuel before installing on manifold. This will help prevent dirt trapped in the fuel system from being dislodged by the free flow of fuel as the carburetor is primed. The operation of the floats and intake needle and seats may be checked under pressure if the fuel pump is used at the bench to fill the carburetor bowl. Operate the throttle several times and visually check the discharge of the pump jets.

Poor Mileage and Engine Loading Complaints

Cases of poor mileage and engine loading on carburetors with automatic choke may be due in many instances to sluggish choke valve opening during cold driveaway, caused by insufficient vacuum in choke housing, a plugged or restricted heat pipe or inlet in choke cover. To check for this condition, have engine warm and running at slow idle. Remove choke heat pipe and hold a finger over the heat inlet hole (hole is on choke housing on some carburetors). If there is little or no vacuum pull on the finger, check the choke housing for gasket leaks or plugged vacuum passages. If these are OK, check choke vacuum passages in carburetor between choke housing and manifold.

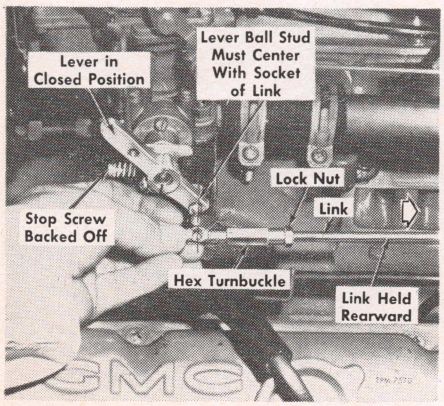

Fig. B Aligning carburetor throttle linkage on V12 engines

Dirty or Rusty Automatic Choke Housing

In cases where it is found that the interior of the choke housing is dirty, gummed or rusty while the carburetor itself is comparatively clean, look for a punctured or eroded manifold heat tube (if one is used).

V-12 Carburetor and Linkage Adjustments

1. Seat idle mixture screws lightly on each carburetor, then back off 1¼ turns as an initial setting.
2. Referring to Figs. A and B, adjust the choke linkage so that it opens and closes both choke valves simultaneously. If both choke valves will not close completely when knob is pulled outward, end of control wire conduit may not be located properly in carburetor clamp to allow full travel of choke lever upon closing.
3. Disconnect accelerator control rod (4) at accelerator idler lever (5). This will allow free movement of carburetor linkage without moving accelerator linkage.
4. Loosen clamp screw (12) which secures hand throttle control wire to front carburetor hand throttle lever (11).
5. Back out idle stop screw (15) at each carburetor to allow throttle plates to close completely.
6. Pull socket at forward end of throttle interconnecting link (6) from lower end of front carburetor throttle shaft lever (9). While holding lower end of throttle shaft lever of front carburetor rearward (throttle plates closed), force throttle link (6) rearward to place rear carburetor throttle plates in closed position. Referring to Fig. B, shorten or lengthen throttle link (6) by turning hex turnbuckle at forward end of link to align throttle lever ball stud with center of turnbuckle swivel socket. Check linkage action.
7. While holding throttle plates closed, turn idle stop screw of front carburetor inward two complete turns from the completely closed position. This is an initial setting which will permit engine to start and operate until final idle speed adjustment is made later (adjustment of stop screw at rear carburetor should be made later).
8. Connect accelerator control rod (4) to accelerator idler lever (5).
9. Press hand throttle control knob inward on control panel. At front carburetor, raise hand throttle lever (11) to just contact throttle shaft lever (9). With lever held in this position, tighten screw (12) clamping hand throttle wire to swivel of hand throttle lever (11). Check hand throttle action.
10. Make sure transmission is in neutral, start engine and run at a fast idle until engine operating temperature is reached.
11. Turn front carburetor idle stop screw (15) to slow idle (400-450 rpm).
12. Connect vacuum gauge to the ⅛" tapped hole at upper left rear side of either carburetor. Remove plug from hole to install gauge.
13. Set both idle mixture screws (14) of either carburetor together to give the highest steady manifold vacuum reading. If vacuum gauge is not available, adjust to provide the smoothest running and maximum idle speed. This can be done by turning both mixture screws in until engine begins to slow down, then back the screws off over the "high spot" until it again begins to slow down. A position midway between the two "slow downs", slightly on the rich side, will give satisfactory idle mixture setting. Repeat this procedure on the other carburetor. Final adjustment may vary slightly from these settings but should not exceed ¼ turn difference between the screws.
14. If the foregoing adjustment results in increased idle rpm, reset front carburetor idle stop screw (15) to obtain desired idle rpm, then make a final idle mixture adjustment on both carburetors.
15. When desired idle stop and mixture adjustments are obtained, adjust the rear carburetor idle stop screw to just contact stop in idle position. Screws of both carburetors should contact stop simultaneously.
16. Check accelerator linkage for free action and travel. Adjustment of accelerator linkage is accomplished by adjusting the length and travel of accelerator rods and idler lever. Carburetor throttle plates should be in full-fuel position when pedal is held ⅛" from floorboard, otherwise damage to linkage may occur, or full throttle opening may not be obtained. Adjustment of linkage can be made at point (10). Shorten or lengthen rods as necessary.

HOLLEY NOTES

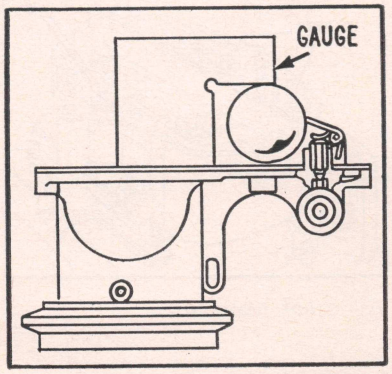

Fig. ①—Measured from flange surface of air horn to bottom of float (not soldered seam).

②—Three holes in pump link. Middle hole for average conditions, outer hole (long stroke) for cold weather, and inner hole (short stroke) for hot weather.

③—Measured from top surface of bowl to surface of fuel.

④—See carburetor text for data on this electric choke.

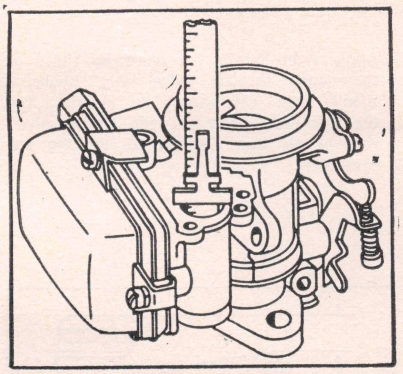

Fig. ⑤—Level of fuel to outer surface of main body, measured through economizer hole.

HOLLEY CARBURETOR ADJUSTMENTS

Year	Engine	Carb. Model	Fuel Level	Float Level	Pump Stroke	Automatic Choke
1954–55	318, 360	852-FFG	11/16③	1 11/32①	②	None
	426, 503	852-FFG	11/16③	1 11/32①	②	None
1955–56	302	AA-1	3/4③	1 1/4①	②	④
	248	1904	3/4⑤	⑤	⑥	None
	324	852-FFG	5/8③	1 1/4①	②	④
1957–59	270	1904	3/4⑤	⑤	⑥	None
	370	4000	1/2③	7/32⑦	⑥	None
	503	4150	⑨	13/16⑧	③	None
	503	885-JJG	5/8③	1 9/32⑩	②	None
	503	852-FFG	5/8③	1 1/4①	②	None
1960–63	6-270	1904	3/4⑤	⑤	⑥	None
	V6-305A	1904	11/16⑤	⑤	⑥	None

⑥—Seasonal setting. Place pump link in outer hole in throttle lever for cold weather operation; inner hole for hot weather.

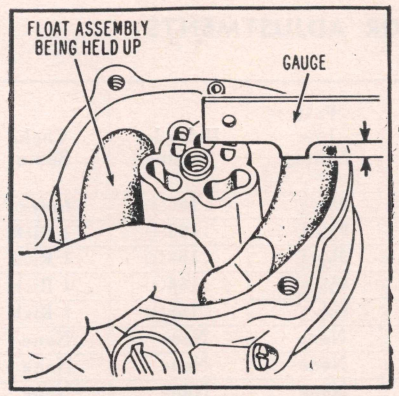

Fig. ⑦—4000 float level.

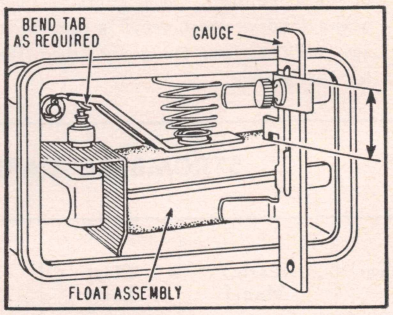

Fig. ⑧—4150 float level.

⑨—Bottom of sight plug hole.

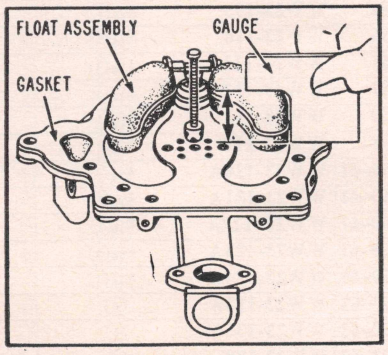

Fig. ⑩—885JJG float level.

ZENITH NOTES

Series 228, 63 Carbs.

For vehicles operating 3000 feet or higher above sea level, an adjustable jet may be used in place of the main jet lower plug. To adjust, accelerate engine speed comparable to 30-35 mph road speed, turn adjustment in until engine runs unsteadily, indicating too lean a mixture, then turn adjustment out until engine runs smoothly.

ZENITH CARBURETOR ADJUSTMENTS

Year	Engine Used	Carb. Series	Float Level	Pump Stroke	Automatic Choke
1952–54	228	228BV	1 31/64①	③	④
	248	228BV	1 31/64①	③	④
	270	228BV	1 31/64①	③	④
	228	63AW	1 5/8②	③	④
	248	63AW	1 5/8②	③	④
1954–55	426	11ADX	3/16⑤	None	None
	503	11ADX	3/16⑤	None	None
1955–56	248	63AW	1 5/8②	③	④
	248	228BV	1 31/64①	③	④
	270	228BV	1 31/64①	③	④
1957–60	270	228BV	1 31/64①	③	None
1960–61	V6-305B	228BV	1 31/64①	③	None

ZENITH NOTES
continued

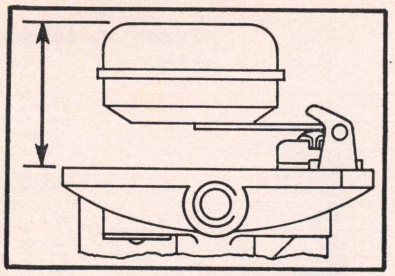

Fig. ①—228 float level.

③—Remove carburetor air horn. Hairpin cotter at top of pump piston rod can be installed in three positions. Long stroke in bottom groove (cold weather), center groove for average conditions, and top groove (short stroke) for hot weather.

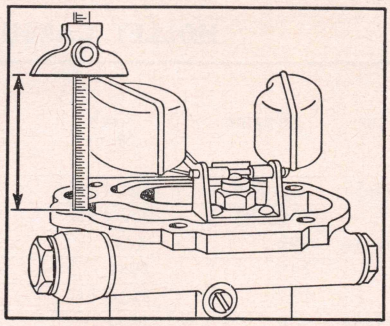

Fig. ②—63 float level.

④—See carburetor text for data on this electric choke.

⑥—Refer to Fig. ①. For carburetors without viton-tipped fuel valve 1/8"; for viton-tipped valve 5/32".

⑦—With throttle at idling position, push pump lever down with finger, then measure distance from bottom of pump rod to slot. If dimension is not correct, disconnect and bend pump rod at upper end as required.

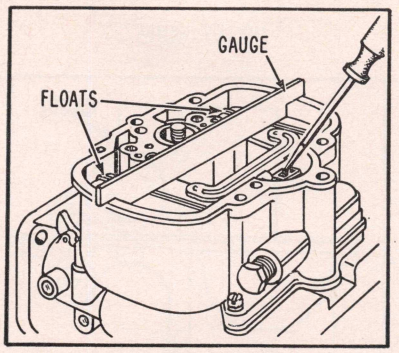

Fig. ⑤—11ADX float level.

⑧—With choke valve fully open, fast idle screw must clear cam when throttle is fully closed. If there is interference, bend link to allow cam to drop below fast idle screw with throttle plate closed and choke open. To adjust, locate fast idle screw flush with inner surface of lever, then turn screw in 7½ turns.

STROMBERG CARBURETOR ADJUSTMENTS

Year	Carb. Model	Float Level	Pump Stroke Setting	Fast Idle Setting	Unloader Setting	Choke Setting
1955	WW23-106B	3/16①	25/64②	9½③	.166④	Index
1955–56	WW23-107A	3/16①	25/64②	9½③	.166④	1 Rich
1955–56	WW23-108A	3/16①	25/64②	9½③	.166④	1 Rich
1956	WW23-109	3/16①	25/64②	9½③	.166④	1 Rich
1956	WW23-110	3/16①	25/64②	9½③	.166④	1 Rich
1957	WW23-111	3/16①	13/64②	None	None	None
1957	WW23-112	3/16①	13/64②	None	None	None
1957	WW23-113	3/16①	17/64②	None	None	None
1958	WW23-116	3/16①	17/64②	None	None	None
1960–61	WW23-120A	3/16①	1/4⑤	None	None	None
1960–61	WW23-121A	3/16①	1/4⑤	None	None	None
1960–61	WW23-122A	3/16①	1/4⑤	None	None	None
1960–61	WW23-123A	3/16①	1/4⑤	None	None	None
1960–61	WW23-124A	3/16①	1/4⑤	None	None	None
1962–63	WW23-133A	⑥	15/16②	None	None	None
1962–63	WW23-135A	⑥	15/16②	None	None	None
1962–63	WW23-138	⑥	15/16②	None	None	None
1962–63	WW23-139	⑥	15/16②	None	None	None
1962–63	WW23-142	⑥	15/16②	None	None	None
1962–63	WW23-144	⑥	1/16⑦	⑧	None	None

④—Apply light closing pressure to choke valve, then open throttle valve fully. Choke valve should open just enough to insert a rod of the thickness listed between choke valve and wall of air horn. Adjust by bending ear of cam lever.

STROMBERG NOTES

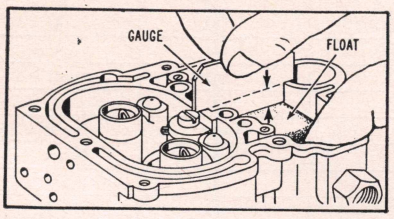

Fig. ①—WW float level.

②—From closed to wide open position. Bend pump rod to adjust.

③—With throttle valves fully closed, turn throttle stop screw in just to the point of contact with throttle shaft lever. Then turn stop screw in the number of turns listed to open throttle valves. With choke valve closed, insert a $\frac{1}{16}$" drill rod between ear on contact lever and first step of fast idle cam. Adjust by bending cam contact ear.

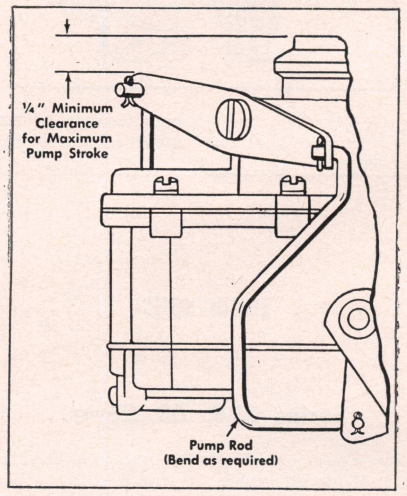

Fig. ⑤—With choke valve held open and throttle valves full closed, distance between top of pump link and top of air horn should be as specified. Setting is gauged with pump rod in outer hole of throttle lever.

CARBURETOR GOVERNOR

King-Seeley Type

This governor, Fig. 1, is mounted between the carburetor and intake manifold and automatically governs the maximum speed at which the engine may be operated.

The gas mixture rushing from the carburetor through the governor throat strikes the offset throttle valve and tends to draw it closed. This action is opposed by a governor spring which is attached to the valve shaft through a cam ribbon and cam. By adjusting the pull of this spring, the governor valve may be made to remain open, and then closed at a predetermined engine speed. Adjustment of the spring pull is accomplished by changing the number of coils operating.

Governor Adjustment

All governors are calibrated and adjusted in assembly to insure accurate control of the maximum engine speed of the model vehicle for which it is intended. However, there will be occasions when minor adjustments are required to satisfy local conditions where the truck is operating.

To adjust a governor for higher speed, turn the adjusting cap counter-clockwise or to the left; for lower speeds turn the cap to the right or clockwise. One turn on the adjusting screw will change the speed 300-400 rpm or between 4 and 5 mph.

When a more sensitive regulation is desired or if the governor is too sensitive and inclined to surge, correct the adjustment as follows by means of the calibrating nut shown at "A," Fig. 2.

If Governor is too Sensitive—If the governor is too sensitive or on the point of surging, remove the adjusting cap and hexagonal shaft assembly and place the special hollow wrench (A-24283) in position on nut "A". Insert the special adjusting wrench (A-25264) through this wrench and turn the main adjusting screw "B" to the right one turn. (These wrenches are available at King-Seeley Distributors.) With the hollow wrench in the slot of nut "A" turn this nut to the right about ¼ turn. The main adjusting screw "B" must be kept from turning while nut "A" is adjusted.

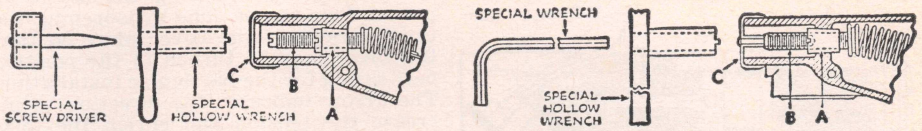

Fig. 2 King-Seeley governor adjustments

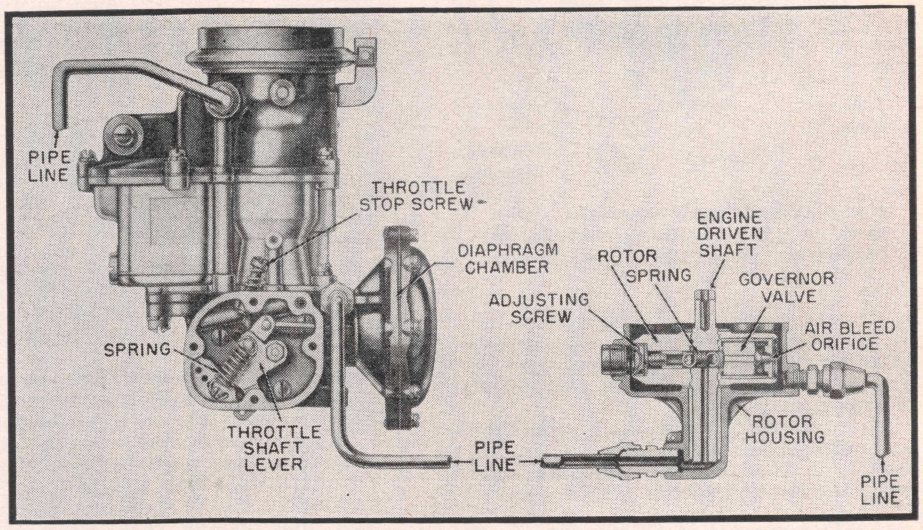

Fig. 3 Holley 1174 governor

Holley Model 1174

Used with Holley carburetors, this governor, Fig. 3, is a vacuum controlled device featuring all the advantages of a mechanical governor without lengthy and complicated linkage. Should it become necessary to make any changes, proceed as follows:

To adjust the governor cut-off speed, remove the seal from the screw on the side of the governor housing and remove the screw. Rotate the engine until the end of the governor rotor, which carries the adjusting screw, is in line with the hole from which the screw was removed. Turn the adjusting screw clockwise to increase or counter-clockwise to decrease governed speed.

Whenever the governor has been disassembled and serviced, after reassembling turn the adjusting screw clockwise until it stops, then turn it counter-clockwise three full turns. Final adjustment is made after the governor has been assembled to the engine.

The vacuum adjusting screw regulates the rpm spread between the governor full load cut-off speed and the no-load engine speed. Turning the screw clockwise will decrease the rpm spread. Turning it counter-clockwise will increase the spread. Changing the position of the screw will change the average governor speed and this should be corrected by the rotor adjusting screw.

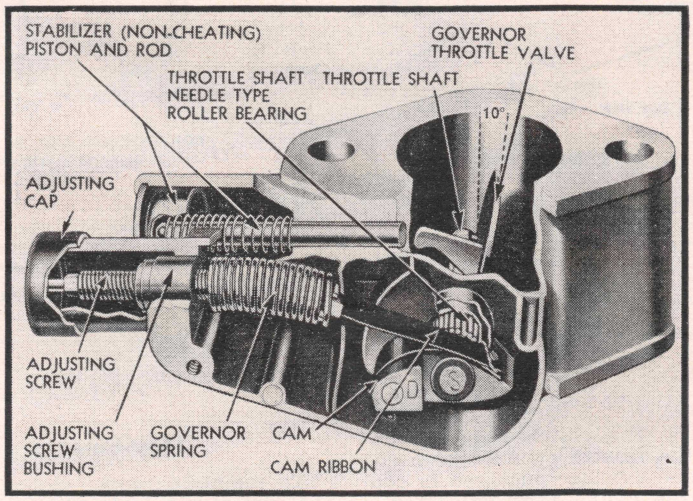

Fig. 1 King-Seeley governor

AUTOMATIC CHOKE

Electric Type

Used on some Holley and Zenith carburetors with Hydra-Matic, this type choke, Fig. 4, controls the opening and closing of the air shutter (choke) during the entire range of engine operation. It is directly connected to the air shutter shaft which assures positive action and accurate control under various operating temperatures.

Manifold vacuum is used to partially open the air shutter after the initial firing of the engine, and heat is used on the

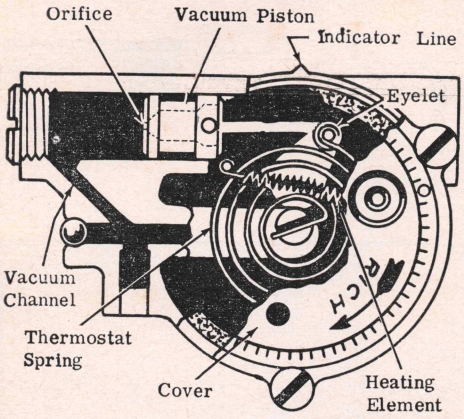

Fig. 4 Electric type automatic choke used on 1955-56 Holley and Zenith carburetors (down-draft type shown)

thermostat spring to control the amount of opening during warming up period. Heat for the thermostat is provided by an electric element in the thermostat chamber.

The electrical connection from the automatic choke should be to the ignition switch so that current will flow only when the ignition switch is turned on.

Thermostat Adjustment

It may be necessary in some cases to increase or decrease the tension of the thermostat so as to provide smooth engine performance during the warm-up period. This can be done by loosening the three screws of the cover plate so that the cover may be turned to the position best suited for the particular installation. The arrow indicates the direction to increase the tension and enrich the mixture. To examine and check the thermostat, proceed as follows:

1. Remove cover plate and allow the thermostat to cool or warm until it has reached a temperature of 70°. *This is very important and should be done in a room having a temperature of 70°.*
2. When the temperature reaches 70°, the inside of the eyelet at the end of the thermostat coil spring should coincide with the "O" mark on the outside of the cover, Fig. 5, which is the original setting made at the factory.
3. If the "O" mark does not coincide with the eyelet at this temperature, compensate the differential (number of notches) when setting the thermostat later.
4. To adjust the thermostat, place cover on case so the eyelet is in position over lever pin with no tension on the thermostat and with the air shutter in wide open position. The "O" mark on cover will be 3 to 4 graduations to the right of the indicator line on the case. Move the cover to bring the "O" mark up to the indicator line.
5. Turn cover 15 notches in direction of the arrow.

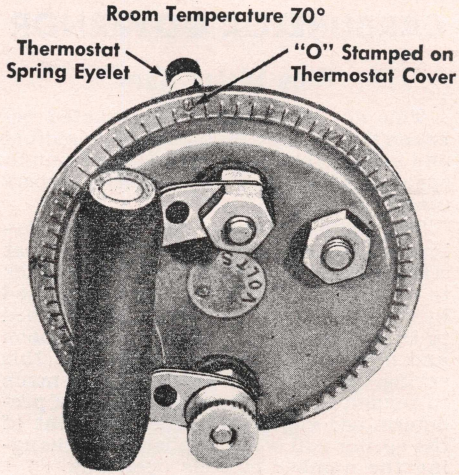

Fig. 5 Eyelet aligned with "O" mark on cover

Service Note

If it is impossible to maintain a room temperature of 70°, provide for the difference by allowing one graduation on thermostat cover for each 5-degrees variation in temperature. For example, if the temperature is 60°, the eyelet on the thermostat spring will coincide with the second graduation to the left of the "O" mark. If the temperature is 80°, the eyelet will coincide with the second graduation to the right of the "O" mark.

Clutch Section

CLUTCH PEDAL, ADJUST

Linkage Type

If clutch pedal free travel is less than ¾", turn forward adjusting nut toward front of adjusting rod until free travel of 1" is obtained. Tighten rear nut to lock adjustment. Turn nuts in opposite direction to decrease free pedal travel after installing new clutch parts.

Additional adjustment can be obtained if necessary by changing the length of the clutch pull rod. The adjustable yoke at the front end of the pull rod can be repositioned as required. Tighten yoke nut firmly after making adjustment.

HYDRAULIC CLUTCH CONTROLS

1960-63

This system, Fig. 1, utilizes hydraulic pressure as a means of transmitting clutch pedal movement to the clutch release mechanism. The system consists of a pedal-operated master cylinder and a slave cylinder, interconnected with hydraulic lines. The clutch pedal is connected to the master cylinder push rod and the slave cylinder push rod is connected to the clutch throwout lever.

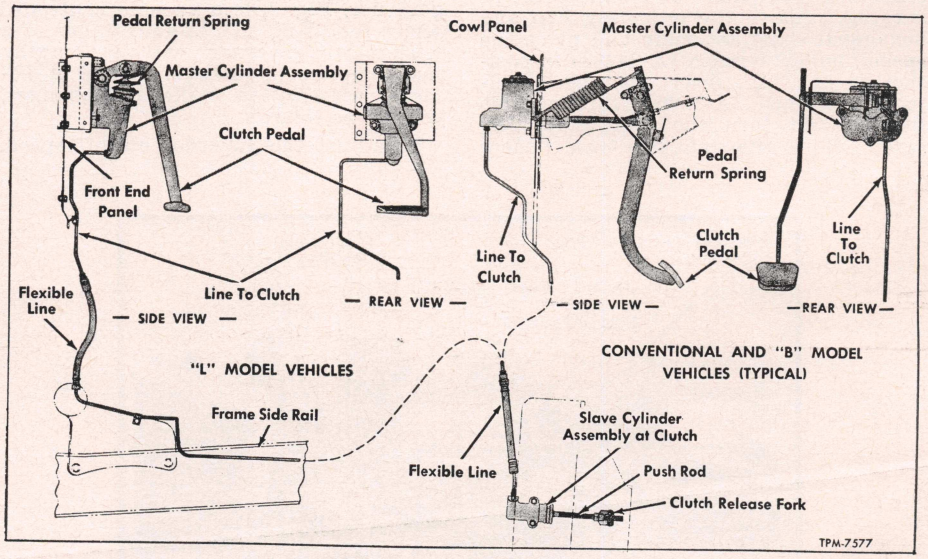

Fig. 1 Hydraulic clutch control system

Maintenance

To maintain proper clutch operation, the system should be checked and serv-

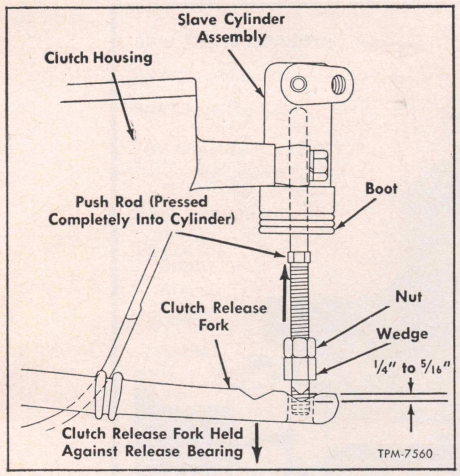

Fig. 2 Slave cylinder push rod adjustment

iced periodically as follows:

1. Maintain proper level of hydraulic fluid in master cylinder. At least once a year drain and flush entire clutch system and refill with new fluid.
2. Inspect entire clutch system regularly for fluid leakage. Leakage must be corrected immediately.
3. Make sure return spring at slave cylinder is not weak or broken.
4. Check and adjust if necessary the clutch pedal linkage as outlined below.

Clutch Control Linkage, Adjust

Two adjustments are required to obtain proper clutch control operation: Master cylinder push rod and slave cylinder push rod.

The purpose of the master cylinder push rod is to make sure the piston is resting all the way back against the piston stop with the end of the push rod barely contacting the piston. If the push rod is adjusted too long, the piston may never return far enough to clear the compensating port in the cylinder. This seals the line and the result is the same as riding the clutch all the time. If the push rod is too short, the pedal must be depressed too far before clutch disengages.

The slave cylinder push rod adjustment obtains the specified distance between the tip of the wedge at end of push rod and bottom of V-slot at end of clutch release fork when cylinder is not pressurized and release fork and bearing are held just in contact with clutch release levers. Clearance between these two points should measure ¼″ to $\frac{5}{16}$″, Fig. 2.

A slight reduction in pedal free travel at high engine rpm is normal; it is the result of centrifugal action on the clutch release lever weights. Do not change adjustment to obtain a definite free pedal travel dimension.

Before making adjustments, the hydraulic system must be free of air and the master cylinder must be filled to ½″ below filler opening.

Master Cylinder Push Rod, Adjust

Before making adjustment, pull master cylinder boot back on push rod. Visually check to see that piston is firmly seated against piston stop. If it isn't, push rod is too long and should be shortened.

Conventional and "B" Models — Loosen lock nut on master cylinder push rod and turn hex portion of push rod as necessary to provide 0 to ⅛″ free travel before push rod contacts master cylinder piston. Tighten lock nut on push rod.

On early production 1960 vehicles, an eccentric bolt was used to attach push rod to pedal. On these vehicles, the adjustment must be made by turning the eccentric bolt.

Model SP5000 — From underneath the vehicle, loosen nut on eccentric bolt, Fig. 3, which attaches pedal to master cylinder push rod. Turn eccentric bolt to obtain ⅛″ (measured at pedal pad) before push rod contacts master cylinder piston. Hold eccentric bolt in this position while tightening lock nut.

Slave Cylinder Push Rod, Adjust

1. Disconnect clutch release fork retracting spring at side of clutch. *Do not apply pressure on clutch pedal while spring is disconnected.*
2. Bottom slave cylinder push rod and piston by pushing slave cylinder push rod toward front of engine as far as it will go.
3. Pull clutch release fork toward rear end of engine until clutch release bearing just contacts pressure plate release levers.
4. Referring to Fig. 3, measure clearance between bottom of V-slot in release fork and pointed tip of wedge on slave cylinder push rod. Clearance should measure ¼″ to $\frac{5}{16}$″. If necessary, adjust by turning adjusting nut at rear of wedge. Adjusting nut is the self-locking type. After making adjustment, connect clutch release fork return spring.

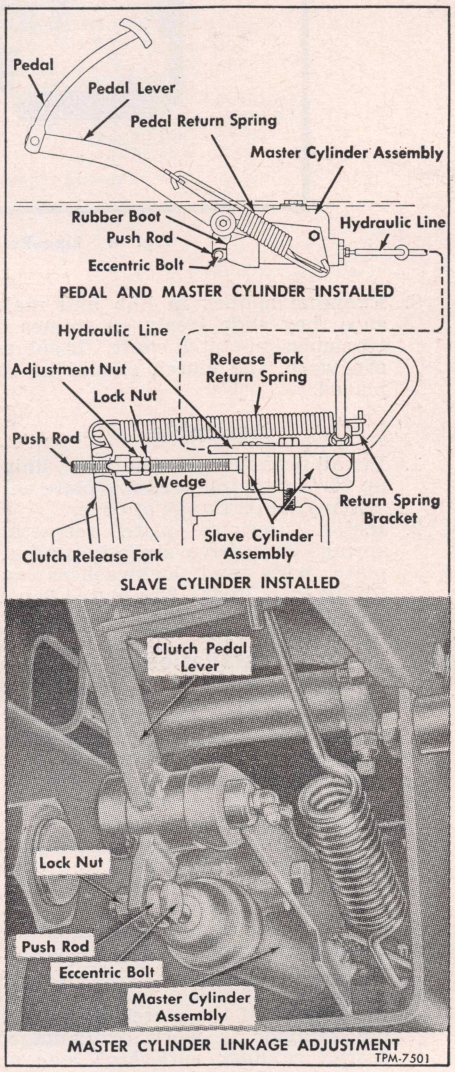

Fig. 3 Hydraulic clutch control linkage. Model SP5000

Bleeding System

The need for bleeding air from the system is generally indicated by a springy, spongy pedal action. The presence of air in the system is the result of low fluid level in the main cylinder, or if some part of the system has been opened. A bleeder valve is provided at the slave cylinder alongside of clutch.

The clutch master cylinder is accessible under the hood on conventional and "B" models, inside the cab and under dash on "L" models, and through the access door on "SP" models.

The plain end of bleeder hose can be slipped over end of bleeder valve. And the system can be bled by either the pressure or manual method in the same manner as when bleeding hydraulic brakes.

DIAPHRAGM SPRING CLUTCH

Removal

1. Remove transmission.
2. Remove clutch throwout bearing from fork.
3. Remove lock nut from adjusting link and remove clutch fork by pressing it away from ball mounting with a screwdriver until fork snaps loose from ball.
4. Install a suitable pilot tool to support clutch during removal.
5. Loosen clutch attaching bolts one turn at a time to prevent distortion of clutch cover until diaphragm spring is released.
6. Remove clutch pilot tool and take clutch from vehicle.

Disassemble

1. Remove three drive strap-to-pressure plate bolts and retracting springs and remove pressure plate from clutch cover. *When disassembling, note position of "O" marks on pressure plate and cover. These marks must be aligned when assembled to maintain balance.*
2. The clutch diaphragm spring and two pivot rings are riveted to the clutch cover. Spring, ring and cover should be inspected for excessive wear or damage and if there is a de-

fect, it is necessary to replace the complete cover assembly.

Inspection

1. Wash all parts except throwout bearing in cleaning solvent. *The throwout bearing is permanently packed with lubricant and should not be soaked in cleaning solvent as this may dissolve the lubricant.*
2. Inspect pressure plate and flywheel for scores on the contact surfaces.
3. Check drive straps for looseness at the clutch cover rivets and for evidence of looseness at the pressure plate bolt holes.
4. Check throwout bearing for roughness and for free fit on sleeve of transmission clutch gear bearing retainer.
5. Check run-out of transmission pilot hole in clutch housing by removing a flywheel bolt and installing a dial indicator. Run-out should not be more than .008".
6. Check fit of ball in clutch fork. This fit should be snug without end play.
7. Inspect clutch disc for worn, loose or oil soaked facings, broken springs, loose or riding rivets.

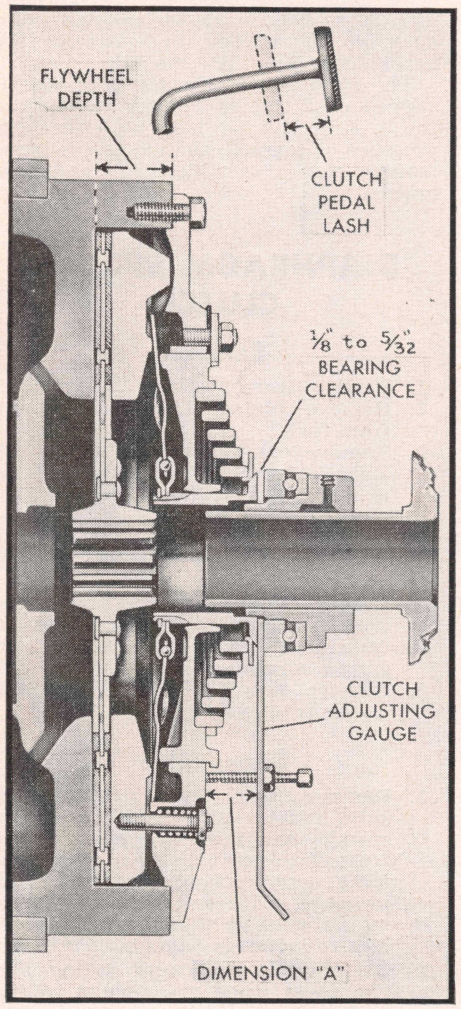

Fig. 5 Adjusting points on Lipe-Rollway ML clutch

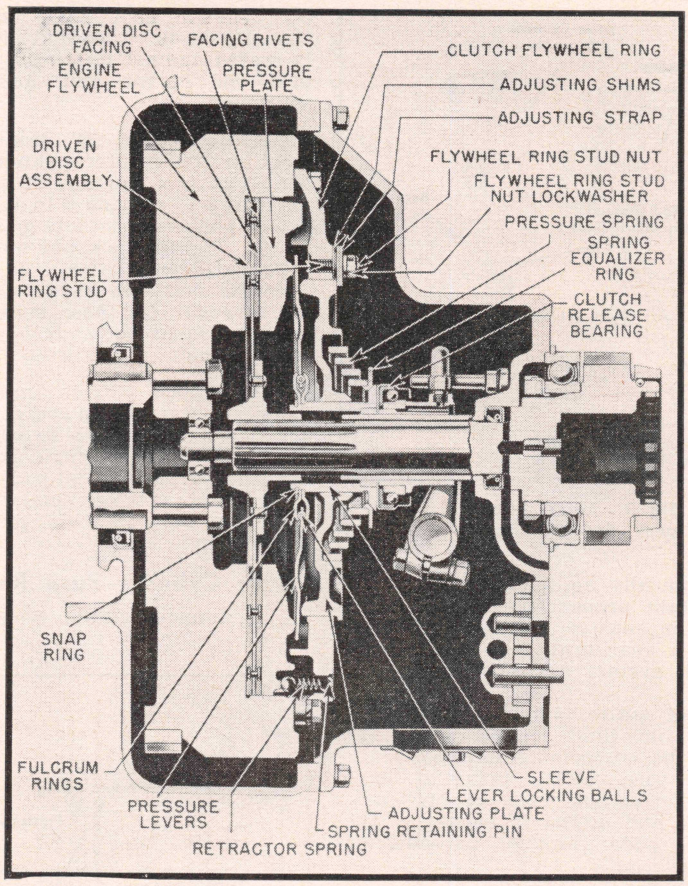

Fig. 4 Lipe-Rollway Type ML clutch

8. Examine splines in hub and make sure they slide freely on splines of transmission clutch shaft. If splines are worn, the clutch should be replaced.

Assemble

1. Install pressure plate in cover, lining up "O" mark [on pressure plate with "O" mark] on flange of cover.
2. Install pressure plate retracting springs and drive strap-to-pressure plate bolts and lockwashers and torque to 11 lb. ft. The clutch is now ready to be installed.

Installation

1. Hand crank engine until "X" mark on flywheel is at the bottom.
2. Install clutch assembly, supporting it with a suitable pilot tool.
3. Turn clutch assembly until "X" mark on clutch cover flange lines up with "X" mark on flywheel.
4. Install attaching bolts and tighten each one a turn at a time to prevent distorting the cover as the spring pressure is taken up.
5. Remove the clutch piloting tool.
6. Pack clutch fork ball seat with a small amount of high melting point grease and install a new retainer in the groove of the clutch fork if the old retainer is worn or damaged. *Install retainer with high side up, away from bottom of ball socket and with open end of retainer on the horizontal.*
7. Replace clutch fork on fork ball in clutch housing by snapping it onto the ball.
8. Lubricate recess on inside of throwout bearing collar and coat throwout fork groove with a small amount of graphite grease.
9. Install throwout bearing to the throwout fork.
10. Install the transmission.

LIPE-ROLLWAY TYPE ML

This clutch, Fig. 4, is a single plate, dry disc type in which pressure on the driven disc is provided by a heavy spiral spring acting through 20 interlocked levers.

Clutch Adjustment

The original setting of the clutch provides for 1½" free movement of the clutch pedal. As the facings wear the clutch sleeve moves toward the clutch release bearing, reducing the clearance and automatically cutting down on the free travel of the clutch pedal. When this travel drops to ½", the clutch should be readjusted.

Never wait for the clutch to start slipping before adjusting it. It may then be too late to make an adjustment. Clutch facings quickly disintergrate once they become burned through slippage, and both facings and pressure plate are short lived thereafter.

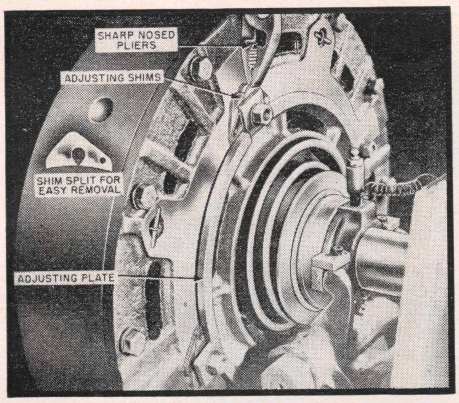

Fig. 6 Removing shims to establish Dimension "A". Lipe-Rollway ML clutch

Do not adjust the clutch pedal linkage until the clutch has been adjusted to the correct Dimension "A", Fig. 5. The correct dimension "A" for the clutches used are as follows: *Clutches may be identified by the manufacturer's number stamped on a name plate or on the cover or flywheel ring.*

Clutch No.	Dimension "A"	Shims Req.①
120- 1-314	$1\frac{1}{16}''$	6
130- 1-117	$1\frac{1}{16}''$	8
130-41-487	$1\frac{1}{16}''$	8
140- 1-116	$1\frac{3}{16}''$	8
140-41-483	$1\frac{3}{16}''$	8
150- 1-316	$1\frac{3}{16}''$	7
150-41-486	$1\frac{3}{16}''$	8

① Removal of one shim, .015″ thick is equivalent to reducing Dimension "A" by $\frac{3}{32}''$. The number of shims listed for each clutch should be placed under each strap when overhauling the clutch.

1. To adjust the clutch, block the clutch pedal in the depressed position. This is important, otherwise the straps and studs may become bent.
2. Back off adjusting nuts five full turns.
3. Remove pedal block. This will allow the adjusting plate to move out of contact with the adjusting shims.
4. Remove a sufficient number of shims to obtain Dimension "A". It is usually sufficient to remove only one shim from each stud, Fig. 6, then checking Dimension "A" before removing more. *Be sure no portion of the shim is torn and remains under the flange of the adjusting plate and that an equal number of shims remain under each strap.*
5. Reblock the clutch pedal. This moves the adjusting plate into contact with the adjusting shims. Then tighten each adjusting strap nut firmly.
6. Recheck Dimension "A".
7. After correct Dimension "A" has been established, adjust the vehicle clutch release linkage so as to obtain proper clutch release bearing clearance of $\frac{1}{8}''$ to $\frac{3}{32}''$ as indicated in Fig. 7.

Clutch Driven Disc, Replace

1. After removing the transmission, remove the cap screws holding the clutch to the flywheel and remove the clutch and driven disc.
2. Remove the flywheel ring stud nuts and adjusting straps one at a time and place the correct number of shims (see table above) under each strap.
3. Examine flywheel, making sure friction face is clean, smooth and dry.
4. Check release bearing and pilot bearing to make sure they are in good condition. Both these bearings are factory sealed and require no further lubrication.
5. Install a new driven disc and bolt the clutch to the flywheel, using a spare splined shaft to align the disc. When bolting the flywheel, screw in each bolt until it just contacts the cover plate, then gradually tighten alternate bolts until the clutch is drawn up evenly against the flywheel. Tighten remaining clutch-to-flywheel bolts.
6. After clutch is installed, check for proper release. Adjust clutch and pedal linkage as outlined above.

Pressure Plate, Replace

A pressure plate dished in excess of .015″ or badly scored should be replaced with a new part. After removing the transmission and the clutch from the flywheel, proceed as follows:

1. Place clutch on arbor press with pressure plate down and compress spring as far as possible.
2. Remove four retractor springs after first removing pins.
3. Slowly release arbor press, allowing clutch spring to return to normal position.

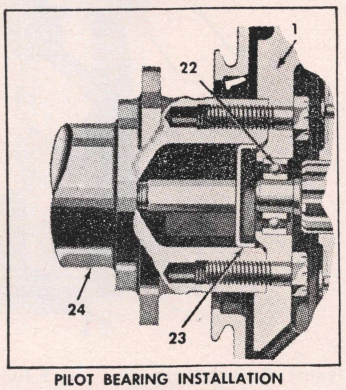

PILOT BEARING INSTALLATION ON DIESEL ENGINE

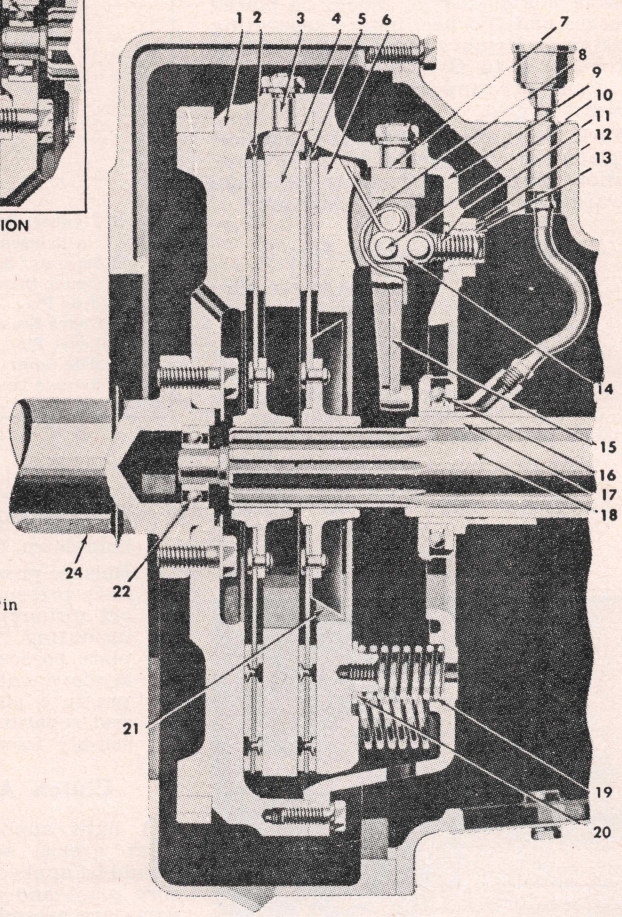

1 Flywheel
2 Forward Driven Disc
3 Intermediate Plate Drive Pin
4 Intermediate Plate
5 Rear Driven Disc
6 Pressure Plate
7 Pressure Plate Drive Pin
8 Retracting Spring
9 Clutch Cover
10 Link Pin
11 Eye Bolt
12 Lock Nut
13 Adjusting Nut
14 Link
15 Clutch Finger
16 Release Bearing
17 Main Drive Gear Bearing Cap
18 Main Drive Gear
19 Pressure Spring
20 Insulating Washer
21 Deflector
22 Pilot Bearing
23 Baffle
24 Crankshaft

Fig. 8 Lipe-Rollway 14" dual disc clutch

4. Holding clutch assembly together by hand, turn it over and carefully lift off pressure plate.
5. Install new pressure plate, turn clutch assembly over and compress in arbor press.
6. See that retractor springs are in place and install pins.
7. Remove clutch from press and reinstall on flywheel.

LIPE-ROLLWAY DUAL DISC CLUTCH

Clutch Pedal Adjust

If free movement of the clutch pedal is less than 1½", change the length of the linkage between the idler shaft inner lever and throwout shaft lever. Make sure lock nuts are securely tightened against adjusting nut or yoke after completing adjustment.

Clutch Removal

After removing the transmission, install three ⅜-16 x 2½" hold-down bolts with flat washers through holes in clutch cover. Pressure plate bosses are tapped to receive hold-down bolts.

Since it is possible to assemble the clutch on the flywheel in more than one position, match marks should be placed on cover and flywheel before separating these parts. Remove capscrews attaching clutch cover to flywheel and take off cover and pressure plate assembly and rear driven disc.

Mark intermediate shaft and flywheel so plate can be reinstalled in original position. Remove intermediate plate and forward driven disc from flywheel.

Clutch Disassemble, Fig. 8

Whenever visual inspection of pressure plate, release levers and related parts indicates excessive wear, need for machining or replacement of worn parts, it is necessary to disassemble the clutch cover. A straight-edge and feeler gauge can be used to check for warpage of pressure plate and intermediate plate.

1. Place assembly on arbor press, using blocks as necessary to support clutch at pressure plate surface. Compress assembly to relieve spring pressure. Then remove lock nuts and hold-down bolts.
2. Release press slowly to gradually relieve pressure on springs. Lift cover off springs and remove springs and insulating washers from pressure plate bosses.
3. Remove cotter pins from lever-to-pressure plate pins, withdraw pins and separate lever and eye-bolt assembly from pressure plate.

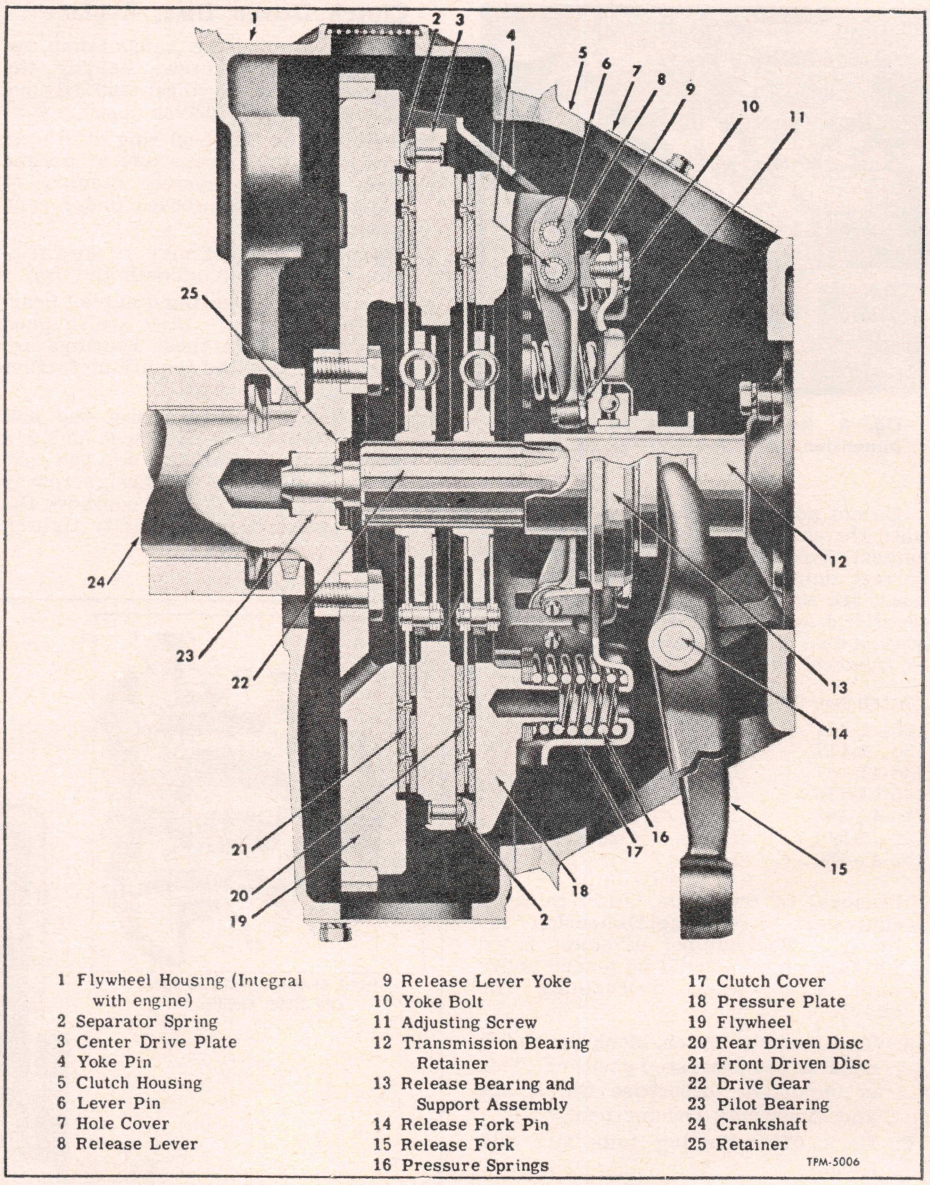

Fig. 9 Long 11" dual disc clutch

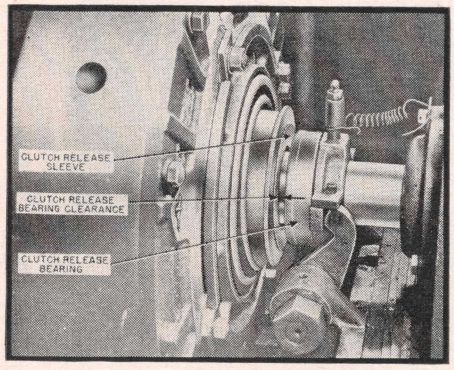

Fig. 7 Clearance between release sleeve and release bearing should be ⅛" to 3/32". Lipe-Rollway ML clutch

Clutch Assemble, Fig. 8

A light application of high melting point grease such as Lubriplate 320 should be applied at driving lugs on pressure plate and at release lever pins as parts are assembled.

1. Make up three assemblies of release lever, links, pins and eye-bolts. Screw adjusting nut into eye-bolt so that three or four inner threads are visible at nut.
2. Locate release lever assemblies and retracting springs at pressure plate, then drive pressure plate pin in with cotter pin hole parallel to pressure plate. Install cotter pin.
3. Lay pressure plate and release lever assembly on blocks or spacers on arbor press bed. Place any necessary shims or spacing washers (required if intermediate plate or pressure plate was ground) on spring bosses, then install insulating washers and springs. Use 15 springs for use with 6-71 engine; with 4-71 or 503 engine, use 12 springs, omitting the center spring in each group.
4. Locate "0" marks on outer edge of cover and pressure plate. With "0" marks adjacent, lower cover into place over pressure plate and springs, making sure springs enter seats in cover. Lay a bar across cover and turn press ram down against bar.

5. Insert guide bolts (1½-20 x 3") through holes in cover and thread bolts into adjusting nuts. Use bolts to guide adjusting nuts through holes in cover as cover is forced down with press. Remove guide bolts and install lock nut on each adjusting nut. *Final adjustment of release levers is made after clutch is assembled to flywheel.*
6. Install three hold-down bolts (⅜-16 x 2½") with flat washers through clutch cover and thread into tapped spring bosses in pressure plate.
7. Remove assembly from press and install on flywheel.

Clutch Install

1. Lubricate and install pilot bearing. Apply a small amount of Lubriplate 320 in pilot bearing cavity in crankshaft; also coat transmission drive gear splines and driving lugs on intermediate plate with same lubricant.
2. Place forward driven disc at flywheel with stamped "Flywheel Side" next to flywheel. Referring to match marks made during removal, position intermediate plate at flywheel with drive lugs engaging drive pins in flywheel.
3. Place rear driven disc against intermediate plate with deflector to rear, away from intermediate plate. Insert a suitable aligning arbor through driven discs and into pilot bearing to support discs while installing cover assembly.
4. Set clutch cover assembly against flywheel with match marks indexed. Install cover to flywheel bolts. Try withdrawing aligning arbor from time to time as cover bolts are tightened to assure that arbor fits freely in splines.
5. Remove three hold-down bolts. Then, using a straightedge across cover and a measuring scale, turn adjusting nut to position the lever thrust button one inch from straightedge. Make adjustment at each lever and tighten lock nuts. Recheck to see that all release levers are identically adjusted.
6. Assemble release mechanism at clutch housing. Spring must hold release bearing support in contact with yoke and parts must operate freely. Grease cup at outer side of housing must be turned down to provide lubrication at release bearing and at surface of drive gear bearing retainer.
7. Install transmission and adjust clutch pedal for free play.

LONG DUAL DISC CLUTCH

Clutch Pedal Adjust

If free movement of the clutch pedal is less than 1½" turn the adjusting nut on fork adjusting rod as necessary to provide 1½" free pedal travel. Make sure jam nuts hold spring against release fork with sufficient tension to seat fork firmly against adjusting nut.

Clutch Removal

1. After removing transmission, mark edge of clutch cover plate and adjacent boss on flywheel.
2. Turn flywheel so two clutch cover bolts are at top. Loosen bolts a few turns but do not remove until other four bolts have been loosened. Turn flywheel as necessary to allow use of socket wrench to loosen remaining bolts.
3. When spring pressure is completely relieved, remove bolts and lift off clutch cover, rear driven disc, center drive plate and front driven disc.

Clutch Disassemble, Fig. 9

1. Place cover on press bed with pressure plate supported on ⅜" blocks or spacers. Place a bar across top of cover and apply pressure to compress clutch springs to relieve strain on yoke bolts.
2. Mark pressure plate and cover so parts can be assembled in original position. Remove three bolts and washers, then release press slowly. Remove bar from cover, lift off cover and remove springs.

Clutch Assemble

Reverse the disassembly procedure to reassemble the clutch. A small quantity of Lubriplate 320 should be applied on lever pin bearings and on driving lugs of pressure plate as these parts are assembled.

If pressure plate and/or center drive plate have been ground thinner, shims equal to the amount of material ground off must be installed under each pressure spring. Shims can be made to same diameters as insulator washers.

Release Levers Adjust

Using a special spacer plate or ground gauge blocks in place of center drive plate and driven discs, mount clutch cover on flywheel. Spacer plate or blocks must be 1.317" thick. When blocks are used, space them evenly under cover and use at least six of them.

With cover and flywheel bolts firmly tightened, measure distance from rear face of cover to crown of adjusting screws. Turn lever adjusting screws to obtain $\frac{11}{16}$" between top of screw to a straightedge held across cover.

When correct adjustment on all screws is obtained, remove cover and stake a portion of release lever at each side of screw while supporting screw head on solid metal surface.

Clutch Install

1. Apply a small amount of lubricant on pilot bearing. Apply Lubriplate 320 sparingly to drive lugs on center drive plate.
2. Place front driven disc, center drive plate and rear driven disc at flywheel.
3. Insert a suitable aligning arbor through driven discs and into pilot bearing to properly locate driven discs.
4. Locate pressure plate and cover on flywheel with alignment marks (made during removal) indexed. Start two cover bolts with lock washers at top where there is sufficient clearance to allow use of wrench. Turn flywheel to bring another pair of cover bolt holes to top and start screws. Do not fully tighten bolts until all have been started.
5. As cover bolts are tightened, try withdrawing aligning arbor from time to time to assure free fit of arbor in driven disc splines.
6. Complete installation and adjust clutch linkage.

Manual Shift Transmission Section

For Clark, Fuller, New Process, Spicer and Warner transmissions used on GMC trucks, see the "name" chapter for service procedures and lubricant capacities

TRANSMISSION, REPLACE

3-Speed

1. Remove transmission rear support (if used) and disconnect propeller shaft from transmission.
2. Disconnect transmission control rods from levers at transmission.
3. Disconnect speedometer shaft at rear of transmission case.
4. Remove clutch housing underpan to gain access to the transmission lower mounting bolts.
5. Remove upper and lower mounting bolts, replacing guide pins in the upper holes.
6. Pull transmission straight back and out.
7. Install in the reverse order, using guide pins in the upper mounting holes to keep the transmission in alignment with the clutch housing during installation.

4 & 5 Speed Light & Medium Duty

1. Remove access cover from cab floor.
2. On C.O.E. models, remove bellows and transmission control tower.
3. Disconnect speedometer shaft at rear of transmission case.
4. Disconnect transmission rear support (if used).
5. Disconnect propeller shaft.
6. On conventional models, remove hand brake lever and linkage at transmission.

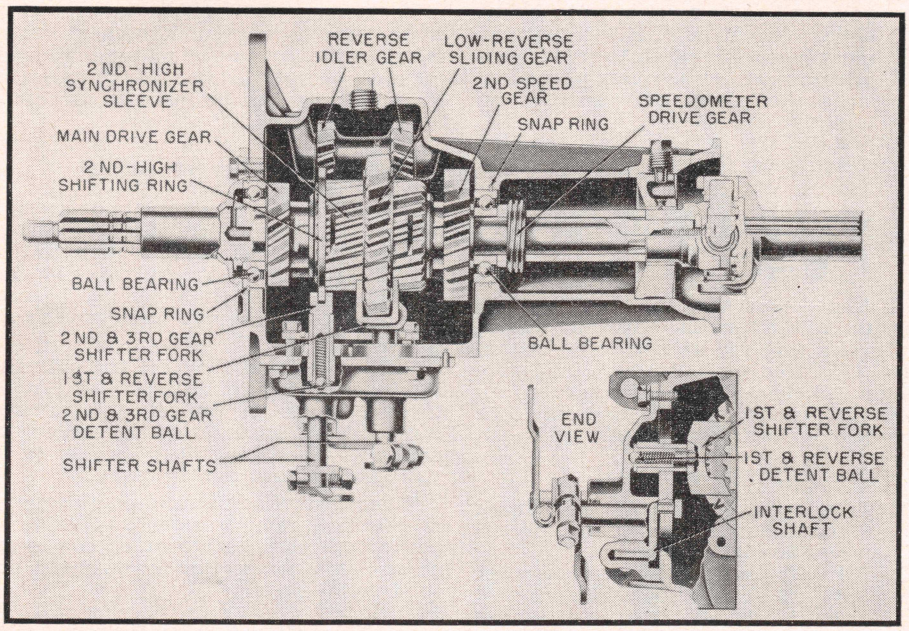

Fig. 1 GMC light duty three-speed transmission. 1952-54

7. Disconnect transmission strut rod (if used).
8. Remove clutch housing underpan.
9. Remove the two top transmission mounting bolts and replace with guide pins.
10. Remove lower mounting bolts.
11. With jack under transmission, move unit straight back and out.
12. Install in reverse order.

All Heavy Duty

The procedure to remove the transmission from the above model trucks is dependent generally upon the type of cab, type of body, and lifting equipment available in the shop. Operations other than those included in this procedure may be necessary if the vehicle has special equipment such as power take-off and controls.

The required operations will be obvious upon visual inspection of the vehicle. Therefore, the following instructions should be used as a guide in replacing a transmission.

1. Inside cab, remove seals and/or cover plates from floor above transmission.
2. If gearshift lever tower is removable, remove it. Some C.O.E. models have the gearshift lever clamped to a stub lever at the transmission cover. In such instances gearshift lever may be removed from stub lever instead of removing the complete tower assembly.
3. Remove hand brake lever and bracket when those items are mounted on the transmission cover. On some models it is necessary to detach the auxiliary transmission control lever bracket which is mounted on the main transmission.
4. Disconnect propeller shaft at flange at rear of transmission. If a separate auxiliary transmission is used, it may be necessary to remove the complete propeller shaft between the transmission and auxiliary unit to provide sufficient clearance to move transmission away from engine. On long wheelbase trucks with propeller shaft center bearing, remove center bearing bolts to allow movement of propeller shafts to provide clearance.
5. Disconnect clutch control linkage and, except when an auxiliary transmission is used, disconnect speedometer cable housing from connector on mainshaft rear bearing cap. Disconnect engine ground strap if attached to transmission case or clutch housing.
6. Disconnect strut rod from rear of transmission.
7. Drain lubricant from transmission and if power take-off is used, remove unit and controls.
8. Inspect to determine if other equipment or brackets must be removed to permit removal of transmission. On some trucks the exhaust pipe or support brackets must be removed.
9. *On trucks equipped with Fuller transmissions, the air pressure must be exhausted from the air system and the air line must be disconnected from the pressure regulator valve before transmission can be removed. Also the feed wire to the circuit switch must be disconnected.*
10. Place transmission dolly or jack under transmission and adjust to carry weight of transmission. Then remove the rear support (if used). If there is sufficient clearance, the rear support may remain on transmission during removal. However, it will be necessary to disconnect support from brackets at frame
11. Remove bolts which attach clutch housing to flywheel housing and move transmission straight back from the engine, using care to keep the main drive gear shaft in alignment with the clutch disc hub.
12. If the transmission is to be disassembled, remove the clutch release mechanism and remove the hand brake mechanism and rear support members if these parts are installed at the rear of the transmission.
13. Reverse the foregoing procedure to install the transmission.

GMC 3 SPEED LIGHT DUTY UNIT, 1952-54

Disassemble

To disassemble the transmission, refer to Figs. 1 and 2 and proceed as follows:

1. Remove cover and shifter assembly.
2. Place transmission in two gears at once to lock the mainshaft and remove the universal joint or yoke retaining cap screw and lockwasher. Slide yoke off mainshaft.
3. Remove clutch gear retainer.
4. Install special clutch gear and bearing puller, Fig. 3, by screwing the threaded sleeve (left-hand thread) on the clutch gear shaft. Turning the puller handle will remove the gear and bearing without damage to the mainshaft pilot bearing.
5. Remove the two groups of roller bearings (14 and 24) from inside of clutch gear.
6. Remove hex head pipe plug from top of rear bearing retainer. On ¾ ton models, remove four capscrews retaining, rear bearing support to housing. Using a hook type puller, pull transmission rear bearing support out of rear of transmission housing.
7. Remove universal joint spacer, speedometer drive gear and drive gear spacer. On ¾ ton models an oil slinger is mounted between the spacer and the universal joint.
8. Turn the yoke of the mainshaft removing and replacing tool, Fig. 4, back on the threads and screw the adapter on the puller shaft, then install the puller shaft into the threaded end of the mainshaft. Bolt the yoke of the tool to the transmission case. *Turn front synchronizer ring so that the lugs line up with the slots in the mainshaft helical spline.*

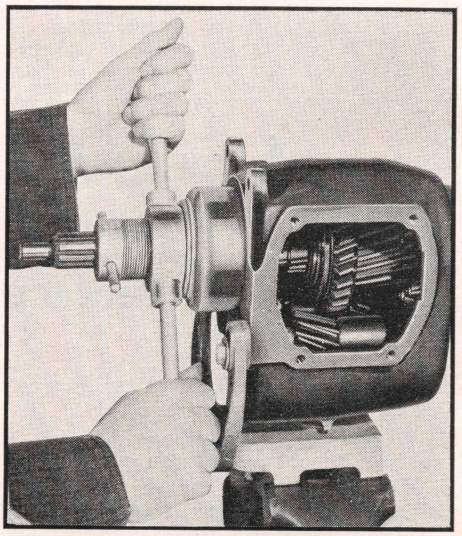

Fig. 3 Removing main drive gear and bearing with puller

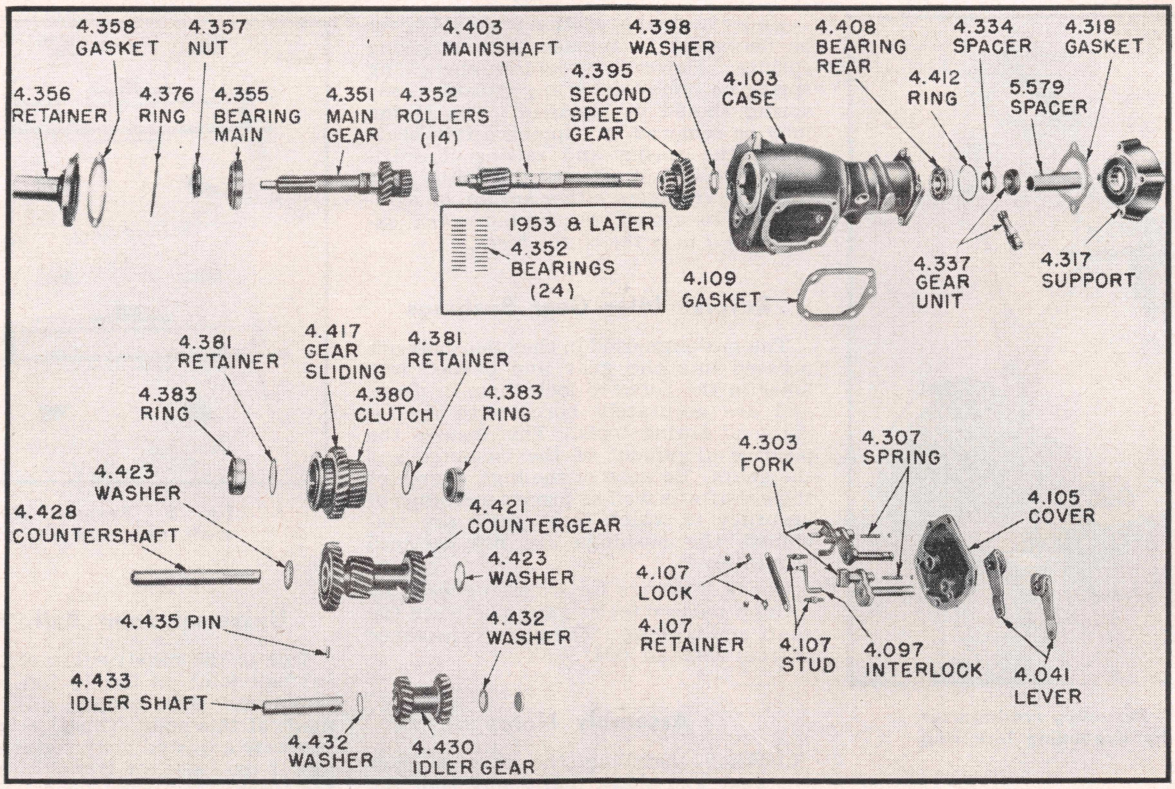

Fig. 2 GMC light duty three-speed transmission. 1952-54

9. While holding puller shaft handle, turn puller handle clockwise to force the mainshaft out of the rear bearing. Disassemble the puller from the mainshaft and the transmission case and remove mainshaft from transmission through front of case.
10. Shift second speed gear into clutch sleeve. Remove clutch sleeve assembly, first and reverse sliding gear and second speed gear from case as a unit. Remove second speed gear thrust washer from case.
11. Expand rear bearing lock ring into case, Fig. 5, with the special expanding tool shown. This raises the lock ring from the groove in the bearing and the bearing may be removed by lightly tapping the outer race toward the inside of the case. *It is necessary to remove the rear bearing before attempting to remove the countergear.*
12. Remove the countershaft by driving from the rear to the front of the case, using a brass drift. Remove the countergear, and the front and rear thrust washers and needle bearings from the bottom of the case. *It is necessary to remove the countergear before removing the reverse idler shaft, otherwise the idler shaft will strike the countergear.*
13. Drive out the reverse idler shaft expanding plug from inside of the case. A hook-nosed punch or drift will be found most suitable for this job.
14. Drive the idler shaft lock pin into the shaft. *This pin is shorter in length than the diameter of the shaft so that the shaft may be slipped out when the pin is driven in. Do not turn the shaft while removing as the lock pin may drop down between the idler shaft bushings.*
15. Remove reverse idler shaft and thrust washer.

Clutch Gear Bearing, Replace

Mount the clutch gear in a vise and remove the bearing retainer nut and oil slinger, using a spanner wrench of the type shown in Fig. 6. The retaining nut and oil slinger is a one piece steel casting

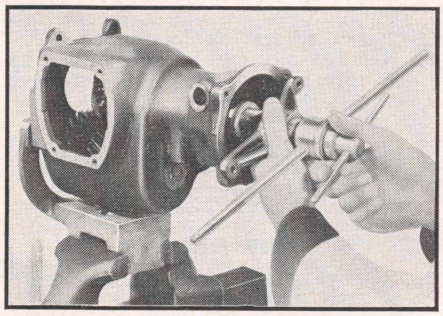

Fig. 4 Removing mainshaft with puller

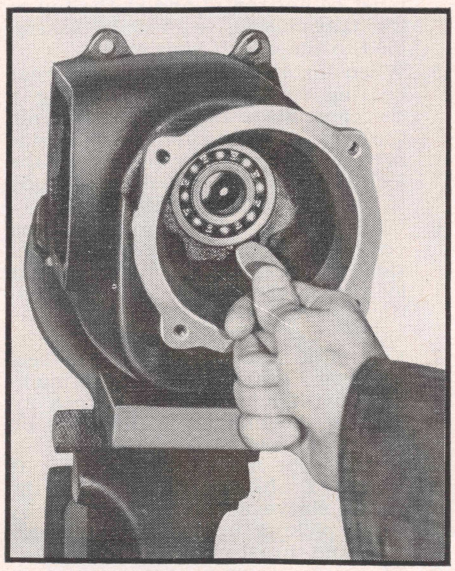

Fig. 5 Removing mainshaft rear bearing by expanding lock ring with tool as shown

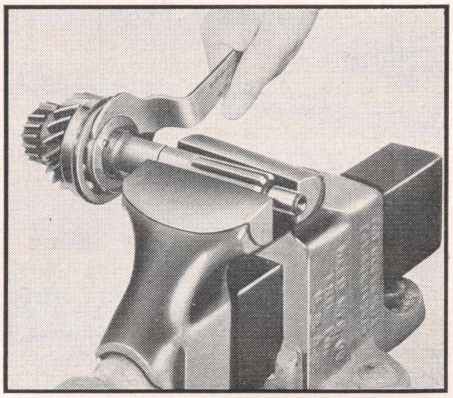

Fig. 6 Removing clutch gear retaining ring and oil slinger

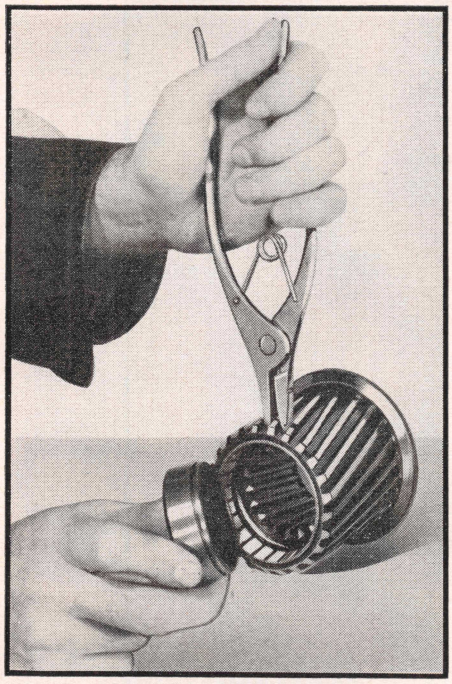

Fig. 7 Removing synchronizer ring by expanding lock ring

machined with a left-hand thread and is locked in place on the clutch gear shaft by being staked in the hole provided for that purpose.

Mount the gear and bearing on an arbor press and press the shaft out of the bearing.

Clutch Sleeve, Disassembly

1. Remove the second speed gear.
2. Remove sliding gear.
3. Turn synchronizer ring in clutch sleeve until ends of ring retainer can be seen through slot in clutch sleeve.
4. Using snap ring pliers, expand retainer into counterbore in clutch sleeve, Fig. 7, and slip out the ring.
5. Check synchronizer cones for wear or for being loose in clutch sleeve. If cones are damaged in any way, it will be necessary to replace the clutch sleeve assembly and both synchronizer rings.

Synchronizer Rings

Inspect the synchronizer rings for smoothness. Place the synchronizer rings in the cones and check with thumbs to see that rings do not rock. Excessive rocking indicates a poor fit between the rings and cone, which will not permit proper synchronizing of gears during shifting.

Synchronizer Energizing Spring

When examining these springs, notice that one of the ends is slightly offset. Each spring must be assembled in its groove in the clutch gear and second speed gear with the offset or locking end between the third and fourth teeth of either of the two banks of teeth on these gears, thus keeping the spring from turning in its groove.

Under normal operation it should never be necessary to replace the energizing springs. However, should an energizing spring be removed for any reason, a new spring should be installed. The spring may be removed by slipping a thin blade under the spring and raising it sufficiently to slide it off over the clutch gear teeth. *In replacing either spring, be careful not to distort the spring when expanding it over the clutch teeth.*

Reverse Idler Gear Bushings

The bushings used in the idler gear are pressed into the gear and peened into holes in the bores to lock them in place, and are accurately bored with special diamond boring tools. This insures the positive alignment of the bushings and the gears. Because of the high degree of their shafts as well as proper meshings of accuracy to which these parts are machined, the bushings are not serviced separately.

Check bushings for excessive wear by using a narrow feeler gauge between the shaft and bushing. The proper clearance is from .002″ to .004″.

Assembly Notes

1. When installing the reverse idler gear and shaft, make sure that the lock pin hole in the shaft lines up with the hole in the case at the same angle, Fig. 8.
2. Use a new idler shaft lock pin, coat the pin with Permatex and drive it in approximately $\frac{1}{16}$″ beyond flush with the case. Peen the hole slightly. The lock pin must be a tight fit in the case to prevent oil leaks.
3. Install a new idler shaft expansion plug in the case.
4. The flat on the forward end of the countershaft engages the clutch housing when the transmission is installed in the chassis and keeps the countershaft from turning. This flat must be horizontal and at the top or the transmission cannot be assembled to the clutch housing.
5. When installing the mainshaft rear bearing, first install the lock ring in the case. Start the bearing in from the rear, making sure the wide side is to the front of the case and use the lock ring expanding tool (see Fig. 5) to expand the ring in the case.
6. Using a brass drift, tap the bearing on the outer race until it passes inside the lock ring. Then remove the lock ring expanding tool and continue to tap the bearing until the lock ring seats in the bearing groove.
7. For initial lubrication, coat the second speed bearing area of the mainshaft with lubricant. And when installing the mainshaft, the lugs on the front synchronizer must slide through the slots in the mainshaft spline. Push the shaft into the clutch sleeve as far as possible by hand, picking up the second speed gear and thrust washer.
8. The proper seating of the mainshaft may be determined by checking the end play of the second speed gear which should be approximately .010″.

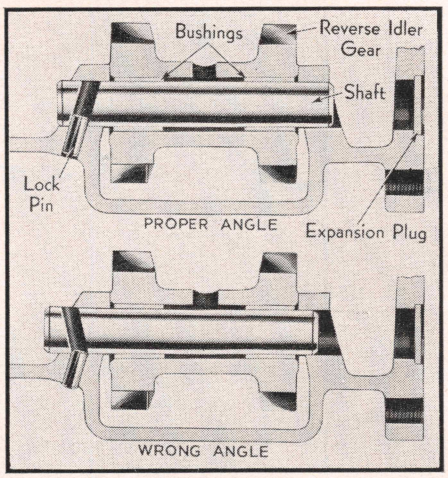

Fig. 8 Reverse idler shaft, gear and lock pin

Universal Joint Ball, Adjust

Due to the construction of the universal ball joint on the ½ ton truck, it is important that proper adjustment be made at this point. This type joint, if improperly adjusted, may result in oil leakage if too loose, or transmission noise if too tight.

Whenever the universal joint is split for any service operation, or should a leak develop at this point, the adjustment should be performed with the ball joint collar oil seal (cork) removed. Attempted adjustment with this cork seal in place, whether it be a new or old seal, will give a false adjustment.

1. Remove universal joint ball from torque tube.
2. Wash universal ball thoroughly in cleaning solvent, then inspect it for roughness. If ball is rough, smooth up with fine emery paper, or if deeply scored, replace.
3. Using four new universal ball collar shims as a starting point, install universal ball and collar. Tighten attaching bolts 8 to 12 lb. ft. torque. *Do not install cork oil seal at this time.*
4. With attaching bolts tight, place both hands on the universal ball or on the housing assembly close to the ball. If the assembly can be moved and is a snug fit, the torque ball is properly adjusted. If the ball or housing cannot be moved by hand or is too loose, remove the ball collar attaching bolts and remove shims to tighten or add shims to loosen until proper adjustment is secured.
5. Remove universal ball or housing assembly, noting number of shims used for later assembly.

GMC 3 SPEED LIGHT DUTY UNIT, 1958-63

Disassemble

1. Remove side cover and gasket (refer to Figs. 9 and 10).
2. Remove main drive gear bearing retainer and, with the puller shown in

Fig. 3, remove the main drive gear and bearing.

3. Remove 24 roller rear pilot bearings, 2 washers and 14 roller front bearings.
4. Unfasten extension housing from transmission case and pull extension and mainshaft out of transmission case, leaving the synchronizer and first and reverse gear in case.
5. Remove synchronizer clutch sleeve and first and reverse gear through side opening in case.
6. Remove countershaft by driving it from front to rear of case, using a soft steel drift. Remove the countergear rollers and thrust washers.
7. Remove the countergear.
8. Drive the idler shaft lock pin into the shaft. This pin is shorter than the diameter of the shaft so the shaft may be slipped out when the pin is driven in.
9. Using a drift pin, tap rear of idler shaft to drive out plug ahead of shaft. Do not turn the shaft while removing as the lock pin may drop down between the idler gear bushings.
10. Remove reverse idler gear and thrust washers.
11. To remove the mainshaft from the extension, expand the bearing snap ring and tap the rear of the shaft with a soft hammer to bring the shaft, speedometer drive gear, second speed gear and bearing out of the extension as an assembly.

Mainshaft, Disassemble

1. Press speedometer gear off mainshaft, using suitable split plates in an arbor press.
2. Remove bearing-to-mainshaft snap ring and press bearing off shaft.
3. Remove second speed gear thrust washer, pull drive pin out of shaft and remove second speed gear.

Mainshaft, Assemble

1. Slide second speed gear on mainshaft, insert drive pin in shaft and install thrust washer against gear.
2. Install new bearing with groove in outside diameter of bearing toward second speed gear.
3. Select one of four available snap rings so end play of bearing on shaft is a maximum of .004″. This may be determined by installing successively larger rings. Use the thickest ring that will enter snap ring groove on shaft.
4. Start speedometer drive gear on shaft with chamfered inside diameter of gear toward bearing. Press gear on shaft until forward face of gear is ⅞″ from rear face of bearing.

Service Note

Service on the main drive gear bearing, clutch sleeve and synchronizer, reverse idler gear bushings and installation of the countergear and needle bearings is the same as for 1954 units.

Reassemble the transmission in the reverse order of disassembly, observing the precautions outlined in the assembly notes for 1954 insofar as they apply to the 1955 unit.

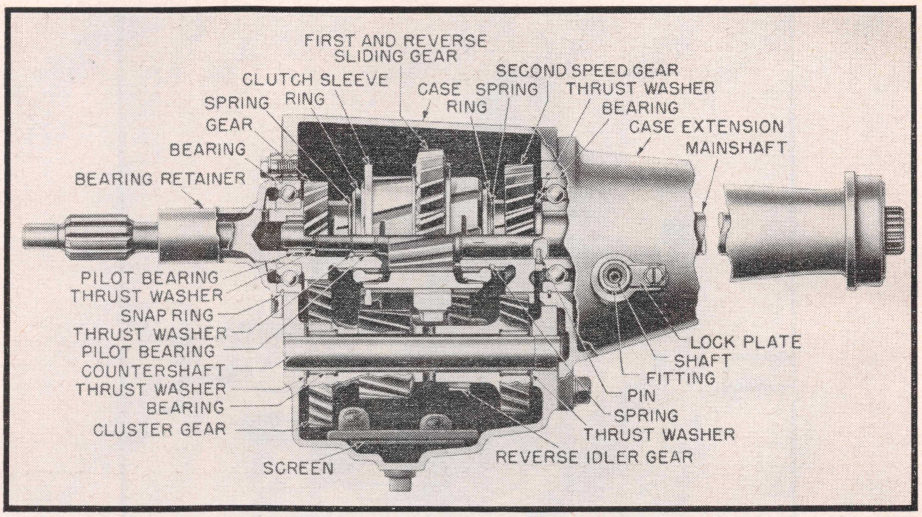

Fig. 9 GMC light duty three-speed transmission. 1955-63

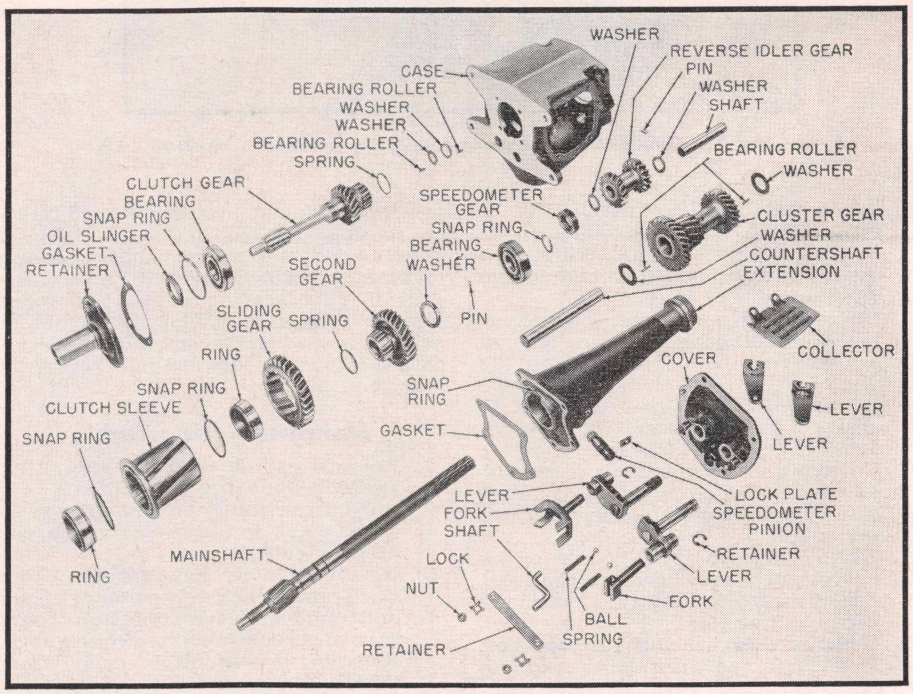

Fig. 10 GMC light duty three-speed transmission. 1955-63

GMC 4 SPEED UNIT

Synchromesh, 1952-63

Disassemble

1. Refer to Figs. 11 and 12 and remove transmission cover.
2. Remove reverse shifter lever bolt nut, screw bolt out of case and remove reverse shifter lever, spacer and flat washer.
3. Remove clutch gear bearing retainer and gasket and, with a puller, pull clutch gear from case. *Index cut-out section of clutch gear with countershaft driven gear to obtain clearance in removing clutch gear and shaft.*
4. Remove clutch gear synchronizer cone and transmission mainshaft pilot bearing roller spacer from end of mainshaft.
5. Remove speedometer driven gear from rear bearing retainer.
6. Place transmission in two gears at once to lock gears and remove universal joint flange retaining screw, lockwasher, plain washer and universal joint front flange.
7. Remove rear bearing retainer and gasket.
8. To remove mainshaft assembly the entire assembly must be pulled back to remove rear mainshaft bearing from case. Use a suitable puller (tool No. J-2667) to pull shaft and bearing out of case.
9. Remove puller from case and then move mainshaft back as far as it will go.

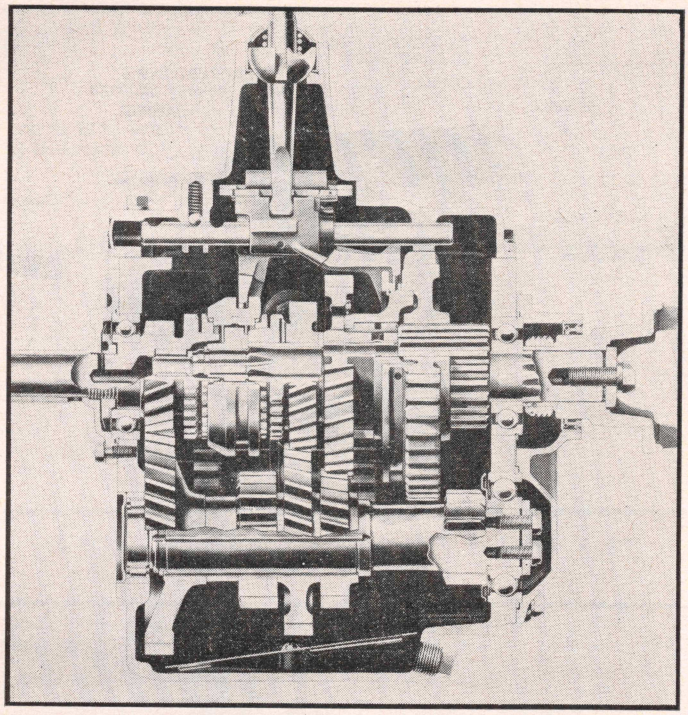

Fig. 11 GMC four-speed synchromesh transmission. 1952-63

10. Use suitable puller (tool J-1619) to remove rear bearing from mainshaft.
11. With first and second speed sliding gear forward, raise front end up and lift shaft out of case.
12. To remove reverse idler gear, drive out shaft retaining pin, using a small punch. This pin is driven into the shaft, after which the shaft may be driven out of the case from front to rear. With shaft removed, take reverse idler gear from case.
13. To remove countershaft assembly, drive a punch through the countershaft front bearing spacer and pry out spacer.
14. Drive countershaft to the rear of the case, using a brass drift on the front end of the shaft, until rear bearing is driven out of case.
15. Remove rear bearing retainer bolt lock plate, retainer bolts and retainer.
16. Using a suitable bearing puller, remove rear bearing and oil deflector from rear end of countershaft.
17. Raise front end of countershaft and lift assembly from case.
18. Remove transmission chip collector from bottom of transmission case.

Clutch Gear

Remove mainshaft pilot bearing rollers from clutch gear and take roller retainer from recess in shaft. Place clutch shaft in a vise and, with a suitable spanner wrench(tool J-2670), remove bearing retaining nut, oil slinger and oil deflector. Use an arbor press to press gear and shaft out of bearing.

To assemble, press bearing on shaft. Then install oil deflector, oil slinger and retaining nut, noting that nut is designed to fit contour of oil slinger. When installing foregoing parts, make sure oil deflector centers around retainer nut hub. Place clutch shaft in vise and tighten retainer nut securely and stake in place. Apply a small amount of grease to bearing surfaces in shaft recess. Install 18 pilot bearing rollers and roller retainer. This retainer holds bearings in position and when transmission is assembled it is pushed forward into recess by mainshaft pilot.

Mainshaft, Disassemble

1. Remove clutch hub retainer ring from pilot end of mainshaft.
2. Support assembly on sliding gear in arbor press and press mainshaft out of gear cluster.
3. Remove clutch key springs from third and fourth speed clutch hub and remove sleeve from hub, being sure to account for three clutch keys.
4. Remove synchronizer cone from third speed gear.
5. Remove bushing from third speed gear and remove gear. *Second speed thrust washer goes between third and second speed gears.*
6. Remove second speed gear from synchronizer ring lugs.
7. Remove synchronizer ring retainer and synchronizer from first speed gear.

Mainshaft, Inspect

After washing all parts, proceed as follows:

1. Inspect mainshaft for scoring or excessive wear at thrust surfaces or splines.
2. Inspect clutch hub and sleeve for excessive wear and make sure sleeve slides freely on clutch hub. Also check fit of clutch hub on mainshaft splines. The third and fourth speed clutch sleeve should slide freely on the clutch hub but the clutch hub should be a snug fit on the mainshaft splines.
3. Inspect third speed gear thrust surfaces for excessive scoring and third speed gear bushing for excessive wear. The third speed gear must be a running fit on the mainshaft bushing and the bushing should be a press fit on the shaft.
4. Check second speed thrust washer for excessive scoring.
5. Inspect second speed gear for excessive wear at the thrust face or in the bronze bushing. Check synchronizer springs for looseness or breakage. Synchronizer springs may be replaced by removing the rivets and installing a new spring with new special rivets. If bushing is worn excessively, the gear assembly must be replaced.
6. Inspect second speed gear synchronizing ring for excessive wear.
7. Inspect bronze synchronizer cone in first speed gear for excessive wear or damage. Also inspect clutch gear synchronizer cone and third speed gear synchronizer cone for excessive wear or damage.
8. First speed sliding gear must be a sliding fit on mainshaft splines.
9. Inspect all gear teeth for excessive wear.

Mainshaft, Assemble

1. Install second speed gear synchronizing ring into first speed gear and install synchronizing ring retainer. Make sure ring retainer is seated fully in snap ring groove of first speed gear, Figs. 13 and 14.
2. Install first speed sliding gear on mainshaft splines with synchronizing ring toward front of shaft.
3. Install second speed gear on shaft with synchronizer springs toward synchronizing ring in first speed gear. Position gear so two cut-out sections index with prongs on synchronizing ring.
4. Install second speed gear thrust washer.
5. Install third speed gear bushing on mainshaft until it bottoms on second gear thrust washer.
6. Check second speed gear end play which should be .009″ to .015″.
7. Install third speed gear over mainshaft bushing and place synchronizing cone on taper of third speed gear.
8. Install clutch sleeve over clutch hub with taper toward long shoulder on hub and drop the three clutch keys into position. Install clutch key springs, one on each side of clutch hub, making sure springs fit under the clutch keys to hold them out against clutch sleeve. Both springs must be installed in the same relative position to provide even tension on the clutch keys.
9. Support mainshaft assembly in an arbor press. Install clutch hub assembly with taper on clutch sleeve and long shoulder of clutch hub toward pilot on mainshaft. Then press clutch hub onto shaft until it bottoms. Make certain that slots in third speed gear synchronizing cone index with the three clutch keys in the clutch hub.

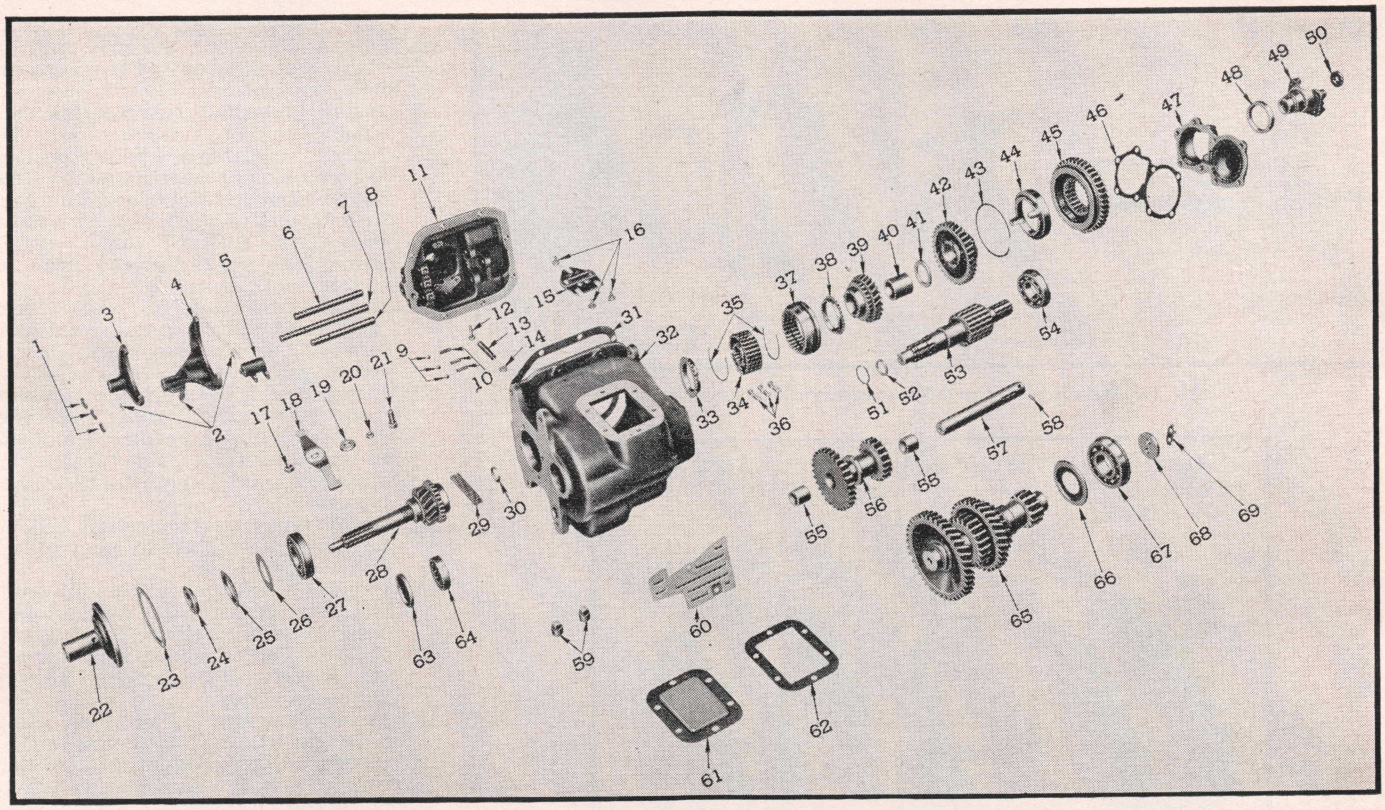

Fig. 12 GMC four-speed synchromesh transmission. 1952-63

1. Expansion plug
2. Taper pin
3. Third and fourth speed shifter yoke
4. First and second speed shifter yoke
5. Reverse shifter head
6. Third and fourth speed shifter shaft
7. First and second speed shifter shaft
8. Reverse shifter shaft
9. Yoke lock ball
10. Yoke lock ball spring
11. Transmission cover
12. Reverse shifter compression spring
13. Reverse shifter compression spring pin
14. Expansion plug
15. Shifter interlock assembly
16. Shifter interlock pin
17. Nut
18. Reverse shifter lever
19. Flat washer
20. Reverse shifter lever spacer
21. Bolt
22. Clutch gear bearing retainer
23. Gasket
24. Clutch gear bearing retainer nut
25. Clutch gear bearing oil slinger
26. Clutch gear bearing deflector
27. Clutch gear bearing
28. Clutch gear
29. Mainshaft pilot roller bearings
30. Roller bearing retainer
31. Transmission cover gasket
32. Transmission case
33. Clutch gear synchronizer cone
34. Third and fourth speed clutch hub
35. Third and fourth speed clutch key spring
36. Third and fourth speed clutch key
37. Third and fourth speed clutch sleeve
38. Third speed gear synchronizer cone
39. Third speed gear
40. Third speed gear mainshaft bushing
41. Second speed gear thrust washer
42. Second speed constant mesh gear
43. Second speed gear synchronizing ring retainer
44. Second speed gear synchronizing ring
45. First and reverse gear
46. Rear bearing retainer gasket
47. Transmission rear bearing retainer
48. Oil seal
49. Universal joint front flange
50. Flat washer
51. Third and fourth speed clutch hub retainer ring
52. Mainshaft pilot roller bearing spacer
53. Mainshaft
54. Mainshaft bearing
55. Reverse idler bushing
56. Reverse idler gear
57. Reverse idler gear shaft
58. Taper pin
59. Drain and filler plugs
60. Chip collector
61. Power take-off cover
62. Power take-off cover gasket
63. Countershaft front bearing spacer
64. Countershaft front roller bearing
65. Countershaft assembly
66. Countershaft rear bearing oil deflector
67. Countershaft rear bearing
68. Countershaft rear bearing retainer
69. Lock plate

10. Check third speed gear end play which should be .010″ to .014″.
11. Install clutch hub retainer ring. The retainer ring is a selective lock ring and should be checked carefully for proper thickness at assembly. There are four thickness rings available.

Countershaft Gears, Replace

Should it be necessary to replace any of the countershaft gears, the lock ring on the front end of the shaft should first be removed and then the assembly supported on an arbor press and the shaft pressed out of the train of gears.

When reassembling the new gears to the countershaft, the radius end of the second speed gear faces the first speed gear. The third speed gear is installed next and inasmuch as both sides of this gear are identical it may be installed either way. The reverse speed gear is installed onto the shaft next so that the chamfered end of the teeth face the counter driven gear. Only one spacer is used and that is installed between the reverse gear and counter driven gear. The counter driven gear is installed last.

When pressing the gears on the countershaft, new drive pins should be used and, after all gears are pressed into position, the round pins should be driven $\frac{1}{32}$″ below flush with shoulder on counter driven gear hub. The snap ring on the front end of the countershaft is a selective lock ring and should be checked carefully for proper thickness on assembly.

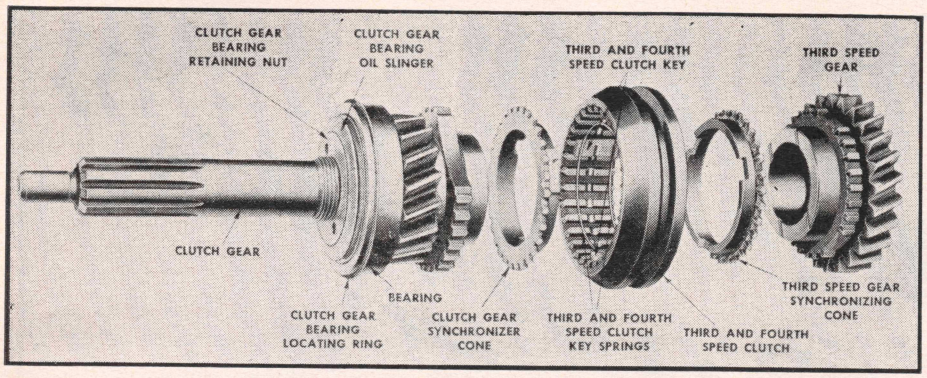

Fig. 13 Details of 3rd and 4th speed synchronizer parts

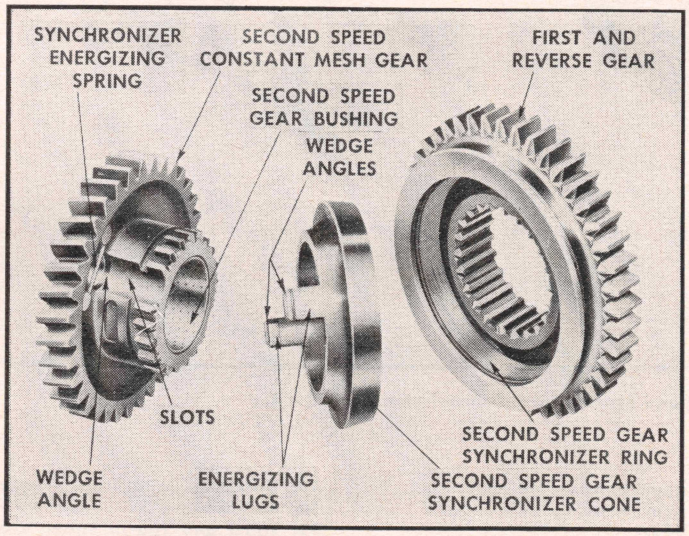

Fig. 14 Details of 2nd speed synchronizer parts

Reverse Idler Gear Bushings

If new bushings are required, press them into the gear from each end until flush with ends of gear. It is important that these bushings be staked as they are split bushings and may have a tendency to creep if not properly staked. When installed and properly staked, they must be line-reamed to size.

Transmission, Assemble

1. Install chip collector in bottom of case.
2. Assemble countergear front bearing spacer into case with its open side toward the outside and its edge flush with case.
3. Install countershaft assembly with rear bearing hub extending through rear bearing hole in case.
4. Install oil deflector and rear bearing on countershaft, using bearing retainer to drive bearing onto shaft. Lock bolts by bending tangs on lock plate.
5. Move countershaft forward into position. Rear bearing outer snap ring limits forward movement of countershaft.
6. Place reverse idler gear into position and install shaft from rear to front, being careful to have slot in shaft in a horizontal position.
7. Drive idler shaft in until hole in shaft aligns with lock pin hole in case and install lock pin.
8. Install mainshaft so that rear of shaft protrudes out of rear bearing hole in case.
9. Install mainshaft rear bearing onto shaft.
10. Install mainshaft pilot bearing spacer on mainshaft pilot. Then install clutch gear synchronizer cone to pilot end of mainshaft and move mainshaft forward until clutch sleeve clears third speed gear on countershaft assembly.
11. Index cut-out portion of clutch gear teeth to obtain clearance over countershaft driven gear and install clutch gear assembly into case.
12. Install clutch gear bearing retainer, using new gasket. Apply Permatex or other suitable sealing compound to bearing retainer bolt threads, install bolts and tighten to 15-18 foot pounds.
13. Raise front end of mainshaft and enter pilot into mainshaft pilot rollers in clutch gear.
14. Using suitable pusher tool (J-2667) install mainshaft and bearing into case. Make sure three cut-out sections of fourth speed synchronizer cone align with three clutch keys in clutch assembly.
15. Install rear bearing retainer, using new gasket. Apply Permatex or other suitable sealer to retainer bolt threads and tighten bolts to 20-25 lb. ft. torque.
16. Place reverse shifter lever into position and thread lever bolt with bolt sleeve and flat washer through lever and into case from inside out. Tighten bolt to 25-30 lb. ft. torque. Install shift lever bolt nut and tighten to 60-65 lb. ft. torque. The sleeve is used under the head of the bolt to act as a shoulder for shifter lever to pivot on.
17. Install universal joint flange with speedometer drive gear on mainshaft. Lock transmission in two gears and tighten yoke retaining cap screw to 60-65 lb. ft. torque. Install speedometer driven gear in rear bearing retainer and tighten securely.
18. Make sure all transmission gears are in neutral and, using a new gasket, install cover assembly, being sure shifting yokes slide over their proper gears and that reverse shifter lever engages the reverse shifter head. Install cover attaching screws and tighten to 20-25 lb. ft. torque.
19. Check operation of transmission in all gears to be sure there is no indication of binding in any position.

Hydra-Matic Transmission Section

For service procedures on the Hydramatic transmission, see the Hydramatic Transmission chapter

HYDRA-MATIC LINKAGE

Before making any checks or adjustments of the transmission linkage, check the performance of the engine. The transmission is often blamed for poor operation of the vehicle when the engine is not tuned to deliver maximum power.

Fig. 1 is a drawing showing a typical linkage hook-up. There are so many linkage variations and intricate hook-ups that it is impractical to illustrate and go into specific procedures for each one. However, there are only two things to remember when it becomes necessary to adjust the linkage:

1. Throttle linkage must be adjusted so that when the carburetor throttle valve (or valves) is fully closed (hot idle) the transmission throttle valve lever must be all the way toward the rear of the transmission against its internal stop.
2. Manual linkage must be so adjusted

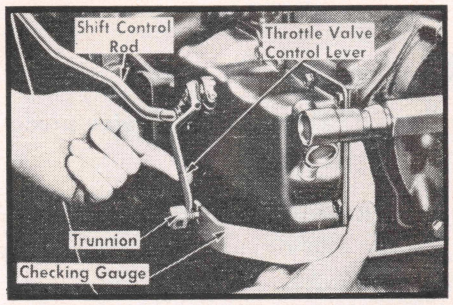

Fig. 2 Checking throttle lever position with gauge

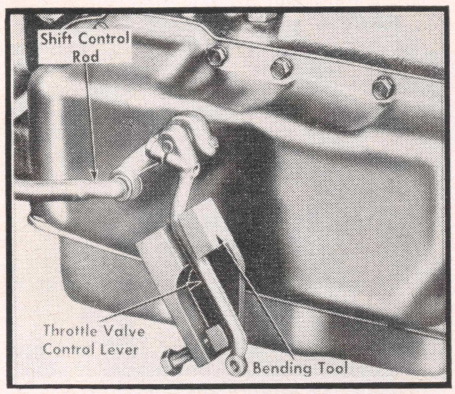

Fig. 3 Use of tool for bending throttle lever

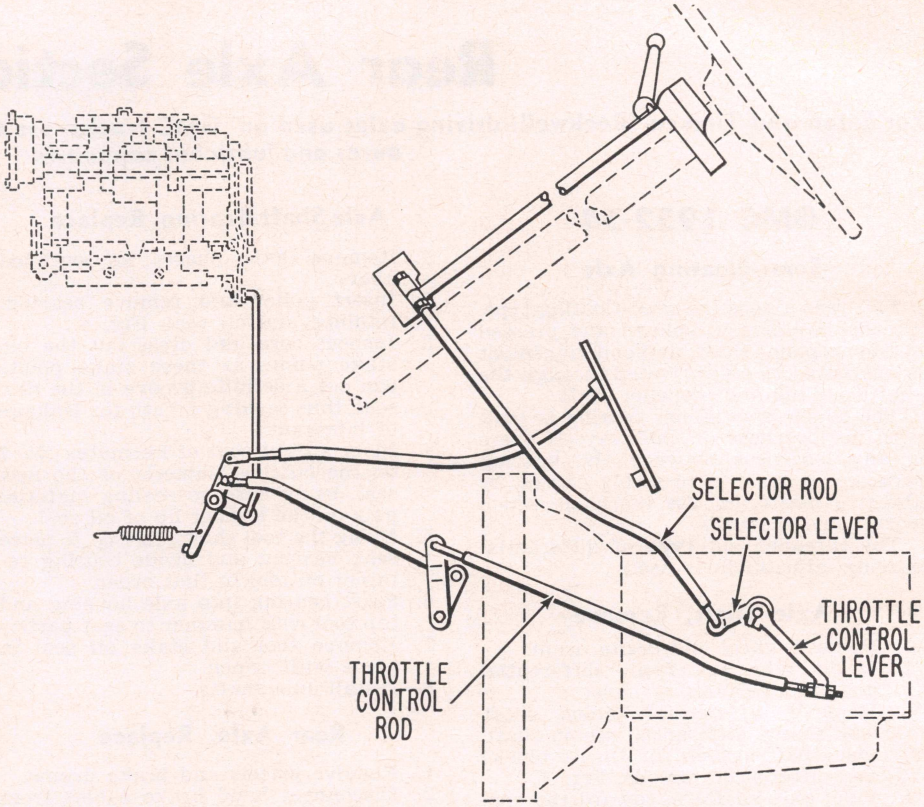

Fig. 1 Schematic drawing of a typical Hydra-Matic linkage hook-up

that the hand lever can be moved freely through all positions of the shift quadrant (from Neutral to Dr) and that the pointer is directly over the positions as they are selected.

Throttle Linkage

Before adjusting the throttle linkage it is advisable to check the alignment of the throttle lever with the throttle rod, Fig. 1. If the alignment is incorrect, bunched shifts, slippage and rough shifting can result.

There are a number of gauges made especially for this operation, one of which is shown in Fig. 2. If an adjustment cannot be made, that is, if the throttle rod cannot be lengthened or shortened to cause the carburetor throttle valve to be fully closed while the transmission throttle lever is all the way back against its stop, bend the throttle lever as required to obtain the desired result. Fig. 3 illustrates one type of bending tool made especially for this purpose. A tool of this type will successfully bend the throttle lever without causing internal damage to the transmission.

To make the adjustment, first disconnect the throttle linkage at the carburetor to relieve all tension from the rest of the linkage. Then disconnect the throttle rod from the throttle lever at the transmission. Hold the throttle lever back against its stop and adjust the throttle rod clevis or trunnion (whichever is used) so that the throttle rod can be attached to the throttle lever without moving the lever away from its stop. The throttle linkage at the carburetor can then be adjusted so that the carburetor throttle valve is fully closed (hot idle).

If a road test indicates that the shifts occur too early, shorten the rod a turn or two. If the shifts occur late lengthen the rod a turn or two. Again road test and, if necessary, alter the adjustment as required to obtain the desired result.

Manual Control Linkage, Adjust

1. Remove manual shift control rod from transmission outer lever.
2. At front end of manual shift control rod, turn both lock nuts away from trunnion.
3. Place transmission outer shift lever in "1-3" position (3rd detent from rear).
4. Place transmission selector lever against stop in "1-3" position.
5. Connect shift rod to transmission lever and lock.
6. At forward end of shift control rod, turn rear lock nut forward against trunnion finger tight. Then turn it one additional full turn. Lock the adjustment with the front lock nut.

Neutral Safety Switch, Adjust

To check the operation of the neutral safety switch, pull the secondary wire out of the center socket of the distributor cap. Place transmission selector lever in "1-4" position. If the starter operates when the ignition is turned on, adjust as follows:

Set hand brake and place selector lever in "1-4" position. Loosen safety switch bracket clamp screw. Adjust the switch bracket to a position where the starter will operate *only* when the selector lever is in neutral position. Tighten bracket clamp screw.

Rear Axle Section

For Eaton and Timken (Rockwell) driving axles used on GMC trucks, see the "name" chapters for service procedures and lubricant capacities

GMC 1952-54

Semi-Floating Axle

This rear axle is the semi-floating type. The drive pinion is splined and pressed in the propeller shaft, and end movement is prevented by a pin riveted through the shaft coupling and propeller shaft.

The double row pinion bearing is built with no looseness or end play. If there is any looseness between the bearing race and cone, it is probably caused by abrasive matter in the lubricant which wore down the balls.

The threaded nut type of differential bearing adjustment is used.

Axle Shaft, Remove

1. Remove wheel and brake drum.
2. Drain lubricant from differential and remove housing cover.
3. Remove differential pinion shaft lock screw, differential pinion shaft, axle shaft spacer (or thrust block) and differential pinions, Fig. 2.
4. Push axle shafts in toward the center of the axle and remove the "C" washers from inner ends of axle shafts.
5. Remove shafts from axle housing.

Axle Shaft, Install

1. Install gasket to flange, aligning center of three holes closest together with notch in flange. Apply heavy shellac or paint to both sides of gasket and oil deflector.
2. Install oil deflector over gasket, aligning oil pocket with notch in flange.
3. Insert six special bolts and force heads down to the deflector.
4. Peen end of shoulder on bolts into countersink around bolt holes in flange.
5. Inspect leather seal on inside of axle housing for excessive wear, damage or misplacement.
6. Slide axle shaft into place. *Use care to see that axle shaft splines do not cut leather oil seal.*
7. Place "C" washers on inner end of axle shaft. Pry shafts apart so that "C" washers are seated in counterbore in differential side gears.
8. Install differential pinions.
9. Select axle shaft spacer to give a free fit to .014" maximum clearance between ends of axle shaft and spacer, Fig. 3. *There are three sizes of axle shaft spacers available to establish this clearance.*
10. Install spacer and assemble pinion shaft, locking in place with special screw.
11. Replace axle housing cover with new gasket and refill differential.
12. Install brake drum. Make sure lug in web section of drum is aligned and extends into drain hole in axle shaft flange.

Axle Shaft Bearing, Replace

1. Remove axle shafts as outlined above.
2. Insert puller and remove bearing, retainer and oil seal, Fig. 4.
3. Inspect bore and dress out the old stake points as these stake points can cut a definite groove in the new seal, thus making a path for leakage of lubricant.
4. Place a light coat of Permatex No. 2 on the outside diameter of the new seal, being sure no sealing material gets on the leather lip of oil seal.
5. Using the tool shown in Fig. 5, place seal, bearing and inside bearing retainer on tool in that order.
6. Start bearing into axle housing and tap tool with hammer to seat parts.
7. Remove tool and stake oil seal in place with punch.
8. Install axle shafts.

Rear Axle, Replace

1. Remove wheels and brake drums.
2. Disconnect hand brake cables from cross shaft lever.
3. Disconnect hydraulic brake line from axle housing.
4. Disconnect shock absorber eye from anchor plate.
5. Remove spring "U" bolts and shock absorber attaching plate.
6. Disconnect spring shackles and drop springs.
7. Slide axle back to disconnect torque tube at front end and remove rear axle assembly from vehicle.
8. Reinstall the assembly in the reverse order of removal and bleed the hydraulic brake system.

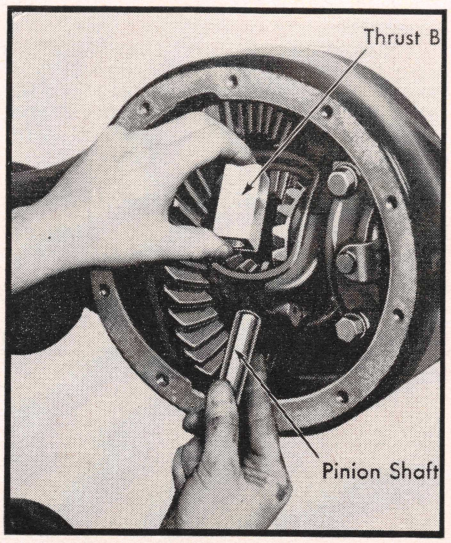

Fig. 2 Removing axle shaft spacer or thrust block

Rear Axle, Disassemble

1. Drain lubricant and remove housing cover.
2. Remove axle shafts as outlined previously.
3. Unfasten torque tube from axle housing.
4. Remove differential bearing adjusting nuts and lift out differential.
5. Remove three tapered bearing retaining screws from axle housing and tap splined end of propeller shaft, allowing shaft to slide out.
6. Remove shims from inside propeller shaft housing, noting the number and total thickness of shims removed.

Propeller Shaft & Pinion, Disassemble

1. Drill end of rivet to clear countersink into which it is upset.
2. Drive out rivet.
3. Loosen pinion bearing lock nut and separate pinion from propeller shaft, using the equipment shown in Fig. 6. This joint is a light press fit.
4. Remove pinion bearing lock nut and press bearing from pinion shaft.
5. Remove bearing lock sleeve and rear bearing lock ring.
6. Remove rear bearing oil retainer and bearing.
7. Wash all parts and inspect for wear and damage. *Any end play in the double row bearing will allow the pinion to float in and out changing the pinion depth in the ring gear. Therefore, replace this bearing if any end play exists.*

Propeller Shaft & Pinion, Assemble

1. Install rear pinion bearing on pinion shaft and lock in place with lock ring.
2. Thread pinion oil retainer over shaft with bevel of large diameter of retainer towards pinion.
3. Coat beveled surface of bearing lock sleeve with rear axle lubricant and install on shaft with beveled edge toward pinion.
4. Press double row bearing on shaft with loading slots toward pinion

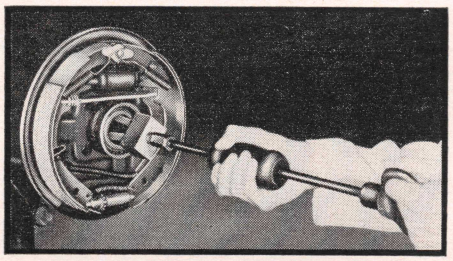

Fig. 4 Axle shaft bearing puller

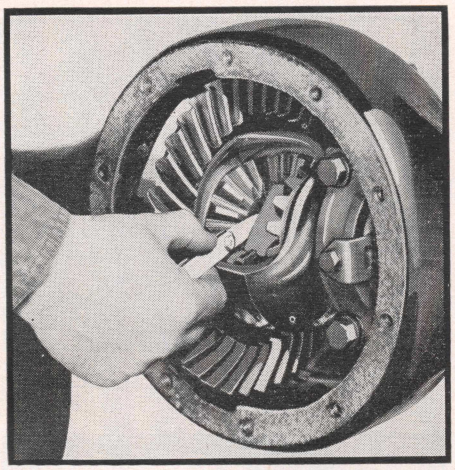

Fig. 3 Checking clearance between axle shaft and spacer

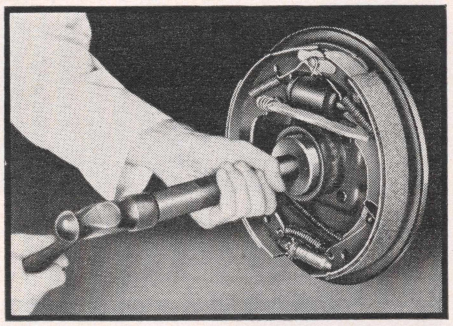

Fig. 5 Axle shaft bearing and oil seal replacer

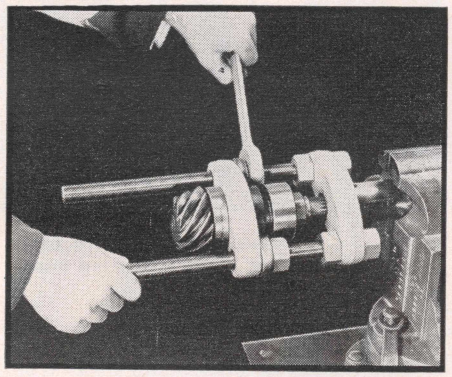

Fig. 6 Removing pinion from propeller shaft

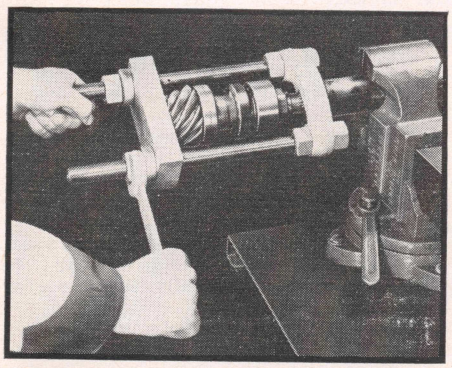

Fig. 7 Installing pinion on propeller shaft

shoulder and install bearing lock nut.

5. Install splined end of pinion shaft into propeller shaft coupling and using the tool shown in Fig. 7, press pinion into coupling until rivet hole is aligned.
6. Install and rivet both ends of a new rivet.
7. Tighten bearing lock nut to 200-240 lb. ft. torque and lock in milled slot in pinion shaft.

Differential Bearing, Replace

1. Install bearing puller, Fig. 8, making sure puller legs are fitted securely in notches in case and see that retaining yoke is tight.
2. Tighten puller screw and remove bearing.
3. Install bearing as shown in Fig. 9.

Ring Gear, Replace

1. Remove ring gear bolts.
2. Tap ring gear off case.
3. Install guide pins in every other hole in ring gear, Fig. 10. These pins can be made from ⅜"-24x1½" long capscrews with heads cut off and ends slotted.
4. Make sure back face of ring gear and face of case are free of dirt and burrs and slip gear over pilot diameter of case.
5. Install every other ring gear bolt and lock washer. Draw them up evenly and snugly so ring gear face is flush with face of case.
6. Remove guide pins and install remaining bolts.
7. Tighten all bolts to 85-95 lb. ft. torque.

Differential Carrier, Assemble

1. If original ring gear and pinion are to be used, replace same thickness of shims in propeller shaft housing counterbore that were removed. *As a means of adjusting pinion depth, shims are available in thicknesses of .012, .015, .018 and .021".*
2. If a new ring gear and pinion are used, one .018" shim should be used as a standard starting point.
3. Install propeller shaft and pinion, driving it down until bearings are seated in housing, using the spacer (J-4050) shown in Fig. 11, to provide pinion to bearing clearance.
4. Check through bearing lock screw holes to make sure lock sleeve is in position against back of front pinion bearing.
5. Install three tapered lock screws and draw them down evenly and tightly, then tighten lock screw nuts.
6. Install differential assembly in carrier and install adjusting nuts. *Carefully slide adjusting nuts alongside the bearing so that threads on nuts fit into threads in carrier.*
7. Install bearing caps, aligning marks on cap with marks on carrier.
8. Install and tighten cap screws until lock washers just flatten out.

Ring Gear & Pinion, Adjust

1. Loosen right hand adjusting nut and tighten left hand adjusting nut, using differential adjusting wrench, Fig. 12, while turning ring gear. Continue tightening left hand nut until all lash is removed, then back off the left hand nut one notch to a locking position.
2. Tighten right hand nut to force left bearing firmly into contact with left adjusting nut. Then loosen the right nut and again tighten snugly against the bearing. This position may be easily determined as the nut comes

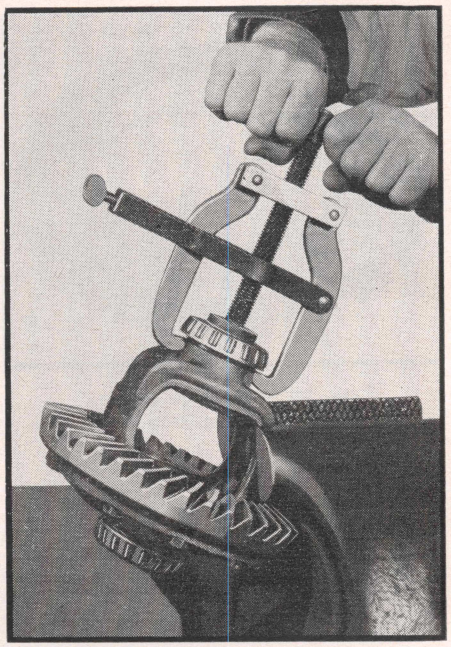

Fig. 8 Removing differential bearing

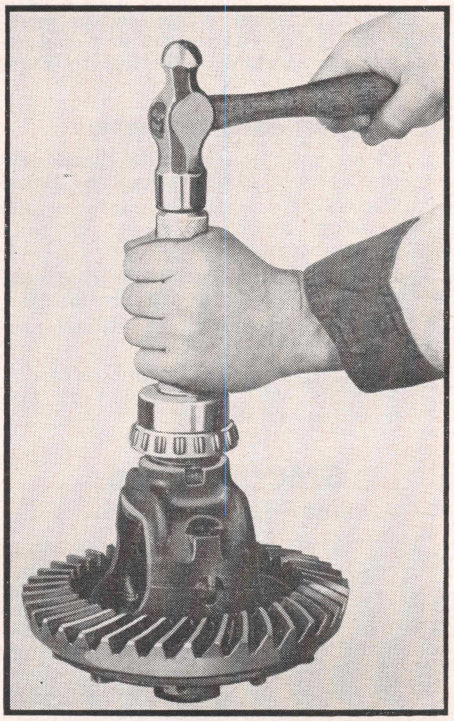

Fig. 9 Replacing differential bearings

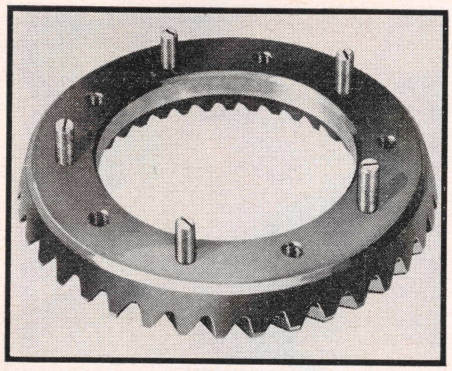

Fig. 10 Use of guide pins when installing ring gear

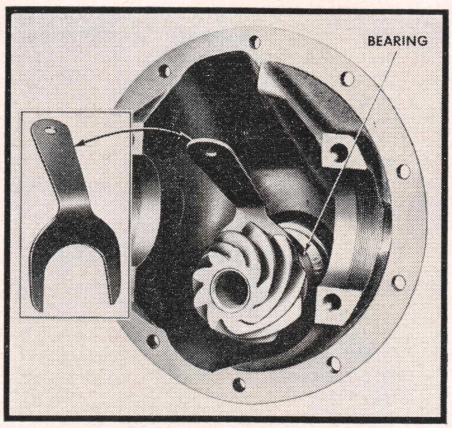

Fig. 11 Checking pinion to bearing clearance

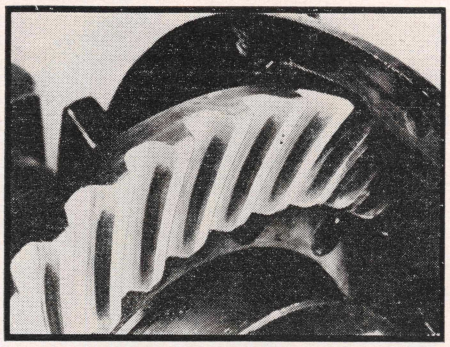

Fig. 13 Correct tooth contact

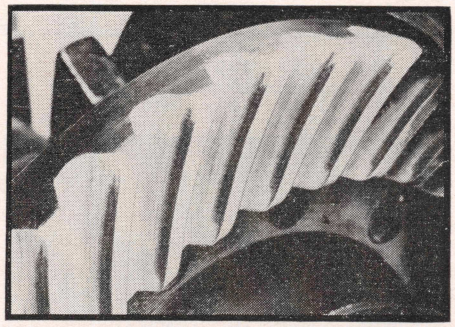

Fig. 14 High narrow contact. To correct, move pinion toward ring gear

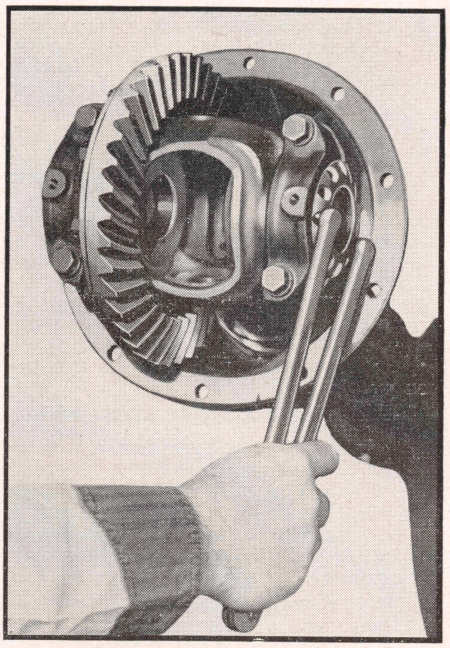

Fig. 12 Adjusting ring gear and pinion

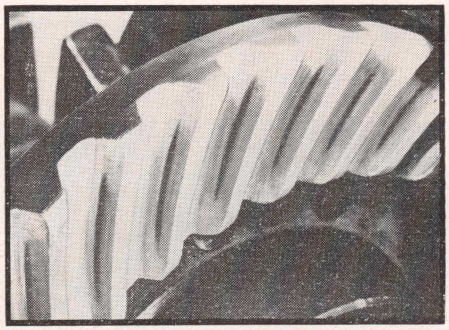

Fig. 15 Low narrow contact. To correct, move pinion away from ring gear

to a definite stop.

3. Tighten right hand nut a minimum of one additional notch to a maximum of two notches. If backlash is more than .008", loosen right hand nut and tighten left hand nut one notch. If backlash is less than .005", loosen left hand nut one notch and tighten right hand nut one notch.
4. Tighten bearing cap bolts to 115-135 lb. ft. torque. Recheck backlash and install both adjusting nut locks.

Ring Gear & Pinion Contact Pattern

Before installing the differential assembly into the rear axle housing, the tooth contact pattern should be checked. Allowable variations in the carrier or drive pinion will cause the pinion to be too far in or out even when shimmed properly. Thus, tooth contact must be tested and corrected as necessary or the gears may be noisy.

Paint the ring gear teeth with a light coating of red lead, white lead or prussian blue. Revolve the gears and observe the analyse contact, referring to Figs. 13 to 17.

Rear Axle, Assemble

1. Clean axle housing and place new gasket over carrier mounting bolts.
2. Install differential assembly in axle housing, install washers and nuts and tighten securely.
3. Lubricate hubs of differential side gears and install in differential case.
4. Install axle shafts as outlined previously.
5. Install housing cover and refill differential with approved type and quantity of lubricant.

GMC 1955-56
Semi-Floating Axle

This rear axle is of the semi-floating, hotchkiss drive type—torque tube not used. The drive pinion is of the over-hung type, mounted on preloaded taper roller bearings. Sealing the pinion shaft is accomplished at the front end by a spring-loaded leather seal bearing on the companion flange or rear universal joint rear yoke which is splined and bolted to the pinion shaft, Figs. 18, 19.

Axle Shaft, Remove

1. Remove wheels and brake drums.
2. Drain lubricant and remove housing cover.
3. Turn ring gear until pinion shaft lock screw can be reached. Remove lock screw and lock washers.
4. Remove pinion shaft and spacer (see Fig. 2).
5. Push each axle shaft in toward axle center; then remove lock from end of each shaft. Axle shafts may then be withdrawn from housing.

Bearing or Oil Seal, Replace

1. With slide hammer equipment, remove oil seal, bearing and bearing retainer.
2. Inspect and clean out housing bore and remove old stake marks. This is important as old stake points can cut groove in new seal, thus causing lubricant leaks.
3. When installing new seal, coat its outside with Permatex No. 2 or equivalent to prevent oil leak. Work soft, smooth grease into bearing rollers.
4. Install new seal, bearing and retainer.

Axle Shaft, Install

1. Note that the right shaft is longer than the left one.
2. Dip axle shaft splines in gear lubricant and insert shafts into housing. Support shafts to prevent damage to oil seals. Mesh end of shafts with side gear splines.
3. Install inner locks solidly in shaft grooves. Push shafts outward to seat inner locks fully in side gear counterbores.
4. Install pinions by placing between side gears and rolling them into place.
5. Select proper spacer by gauging be-

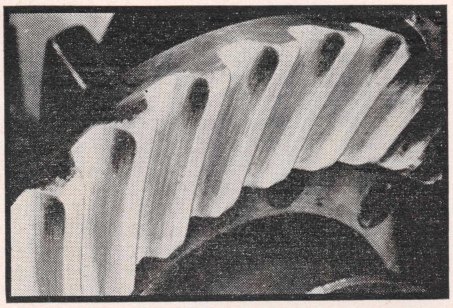

Fig. 16 Short toe contact. To correct, move ring gear away from pinion

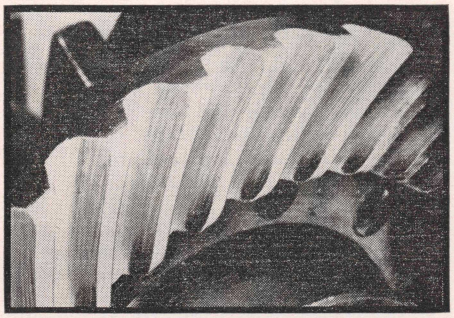

Fig. 17 Short heel contact. To correct, move ring gear toward pinion

tween axle end and spacer as shown in Fig. 3. Clearance should be .003″ to .014″. Three sizes of spacers are available.

6. Insert pinion shaft through case, pinions and spacer. Align screw hole in shaft with hole in case. Install lock screw with lock washer.
7. Install housing cover, brake drums and wheels.

Rear Axle, Replace

Major operations on this axle assembly may be performed without removing the complete assembly from the vehicle. There may be occasions, however, when it will be necessary to remove the complete assembly as a result of collision which may cause distortion of axle housing or axle shaft tubes. *The following axle housing removal, therefore, is to be used only when replacement of axle housing is necessary.*

1. Raise vehicle from floor and support with stand jacks under frame side rails.
2. Remove rear wheels.
3. Remove two trunnion bearing "U" bolts from rear universal yoke and split rear universal joint. Tape bearings to trunnion.
4. Disconnect hand brake cable at equalizer and remove cables from clamps on frame.
5. Disconnect hydraulic brake line connection at rear axle housing.
6. Disconnect shock absorber eyes from anchor plates.
7. While supporting axle housing with hydraulic jack, remove spring "U" bolts and lower axle assembly to the floor.
8. Reverse the foregoing procedure to install the axle housing, being sure to bleed the brake system when the installation is completed.

Differential Carrier, Remove

1. Remove axle shaft as outlined previously. *Axle shafts may be pulled out only far enough to clear the differential side gears.*
2. Remove trunnion bearing "U" bolts from rear universal joint and split joint.
3. Lower propeller shaft to floor.
4. Remove nuts and copper washers that retain differential carrier to axle housing.
5. Place drip pan under carrier and slightly separate carrier and housing and allow lubricant to drain out.
6. Remove differential carrier assembly.

Differential Carrier, Disassemble

1. Referring to Fig. 21, mark bearing caps and carrier for reassembly in same position.
2. Remove differential bearing caps and adjusting nuts by tapping on bosses of caps until free from dowels. *Do not use screwdriver to pry caps off as this may damage machined face of caps.*
3. Remove differential and ring gear assembly from carrier housing.
4. Remove differential pinion shaft lock screw and differential pinion shaft from differential case.
5. Remove pinions and side gears.
6. Hold companion flange from turning with a suitable holding tool and remove propeller shaft flange nut.
7. Pull flange from pinion shaft.
8. Remove pinion from carrier by tapping on front end with soft hammer.
9. Remove pinion shaft oil seal, front bearing and bearing spacer from carrier. *Some axles may have a $\frac{1}{16}$″ shim behind the spacer. This is a production item only and should be discarded.*
10. Wash all parts and examine for wear or damage.

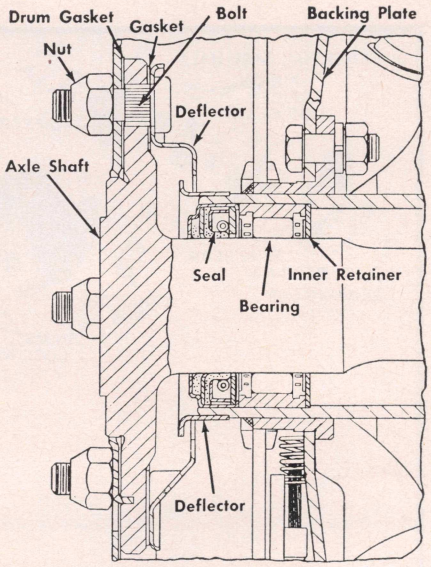

Fig. 19 Axle shaft mounting at outer end. For GMC Model H-033 axle

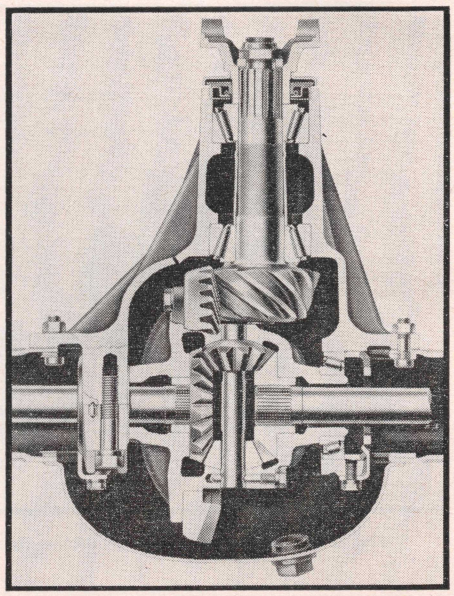

Fig. 18 Differential carrier assembly. GMC Model H-033

Pinion & Bearings, Replace

1. Using a brass drift, remove front and rear bearing outer races.
2. Install new bearing cups in carrier. Bearings seat against shoulders, Fig. 18.
3. Remove rear bearing inner cone. Note size of shim removed from between cone and gear.
4. Determine the correct shim to be placed between the pinion and rear pinion bearing inner race. This shim is installed with the three tangs toward the pinion gear face. If the original ring gear and pinion are being used in the original carrier, install the original shim or one the same size if the shim is damaged. *If a new pinion or differential carrier is being installed, note the markings on the end of the pinion gear and on the differential carrier and obtain the correct shim size to use with these parts from your supplier.*
5. Install new bearing cone, pressing cone against shim and rear face of pinion.

Ring Gear, Differential Bearings & Case, Replace

These parts are replaced in the same manner as outlined previously for the H-033 axle.

Differential, Assemble

1. Lubricate pinion bearings with hypoid lubricant and install pinion in carrier.
2. Install a new pinion bearing spacer with large end toward gear.
3. Install front pinion bearing cone on pinion shaft.

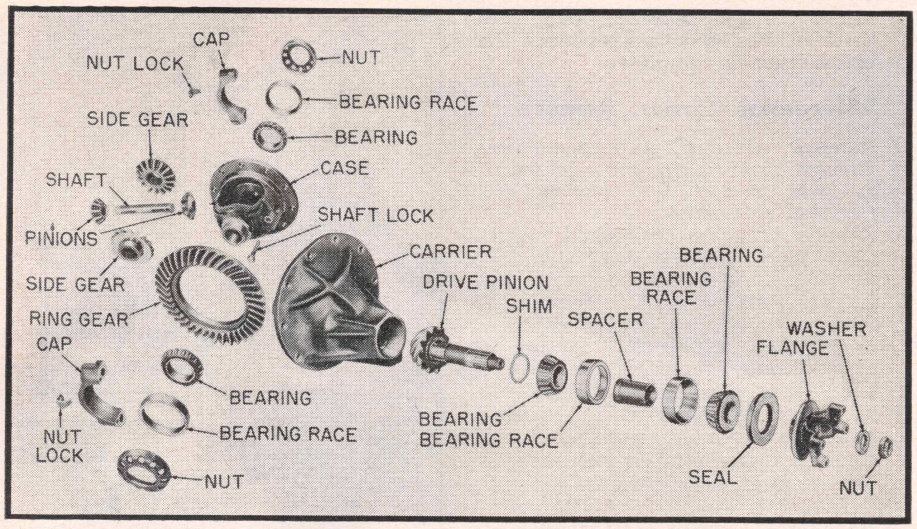

Fig. 21 Exploded view of differential carrier assembly. GMC Model H-033

4. Soak new oil seal for 10 minutes in light engine oil. Wipe outside diameter at seal and coat with a sealer such as Permatex No. 2. Install new seal with a suitable driver.
5. Install companion flange and deflector, securing with special washer and new special self-locking nut.
6. Check the pinion bearing preload with a torque wrench or with a spring scale. Tighten the flange nut until the torque required to turn the pinion with the torque wrench is 15-25 inch lbs. If a spring scale is used, it should require 1⅞ to 3⅛ lbs. to turn the pinion.
7. Install differential in carrier with outer races and adjusting nuts.
8. Install bearing caps, aligning marks on caps with marks on carrier.
9. Install and tighten cap nuts snugly.
10. Lubricate hubs of differential side gears and install in differential case.
11. Roll the differential pinions into position and install pinion shaft and lock screw.

Ring Gear & Pinion, Adjust

This procedure is preformed in the same manner as outlined previously for the 1954 H-033 axle.

Differential Carrier, Install

1. Clean axle housing and place new gasket over carrier mounting bolts.
2. Attach carrier assembly to axle housing, install new copper washers and nuts and tighten securely.
3. Connect rear universal joint.
4. Refill housing with approved type and quantity of lubricant.

GMC SINGLE SPEED

Full-Floating Axle

These rear axles, being of the full-floating type, enables easy removal of the axle shafts without removing the truck load or jacking up the rear axle.

The drive pinion is straddle mounted, being supported at the rear end by a straight roller bearing. On H-050 and H-072, Fig. 22, models, the drive pinion is supported by a tapered roller bearing composed of two inner cone and roller assemblies with a one-piece outer race for both bearings. On H-075, H-105, H-110, H-125 and H-130, Fig. 23, models, the drive pinion is supported at the front by a double-row ball bearing.

Axle Shaft, Replace

On H-050 and H-072 axles, Fig. 24, remove the bolts which attach the axle shaft flange to the wheel hub. Install two ½"-13 bolts in the threaded holes provided in the axle shaft flange. By turning these bolts alternately, the axle shaft may be easily started and then removed from the housing.

On H-075, H-105, H-110, H-125 and H-130 axles, after removing the hub cap, note the threaded hole in the center of the axle shaft flange. This hole is provided for use with a screw adapter which is to be attached to a hammer type puller. Screw the adapter in the flange and pull out the axle shaft.

Reverse the foregoing procedure to install the axle shaft. But on H-075, H-105, H-110, H-125 and H-130 axles, Fig. 25, it may be necessary to move the truck slightly in order to align the splines on the shaft with those in the wheel hub and differential side gears.

On H-050 and H-072 axles, to prevent lubricant leaking through the axle flange bolts, a small amount of Permatex should be applied to the bolt threads. Use care in the amount of sealer applied as in too heavy an application the sealer will be squeezed out as the bolt is installed and may get between the axle shaft flange and hub and thus destroy the sealing of the flange to the gasket.

Wheel Bearings, Remove

1. Raise truck and place on stand jacks.
2. Remove wheel and axle shaft.
3. Remove hub and drum.
4. Remove inner bearing and oil seal with a suitable puller.
5. To remove outer bearing, first tap outer race to relieve tension at snap ring, then remove snap ring.
6. On H-050 and H-072 axles, press outer bearing from hub.
7. On H-075, H-105, H-110, H-125 and H-130 axles, remove the bearings by driving on the axle shaft spacer, using an end cut off an old axle shaft. This will also bring out the inner race and roller assembly.

Replace & Adjust

Install the bearings and oil seal in the reverse order of removal. Then, while turning the wheel hub, tighten the adjusting nut tight, then back it off 45°. Turn the hub by hand to make sure it turns freely. Install the adjusting nut and lock. Install and tighten the lock nut and replace the axle shaft.

Rear Axle, Replace

1. Raise vehicle from floor and support

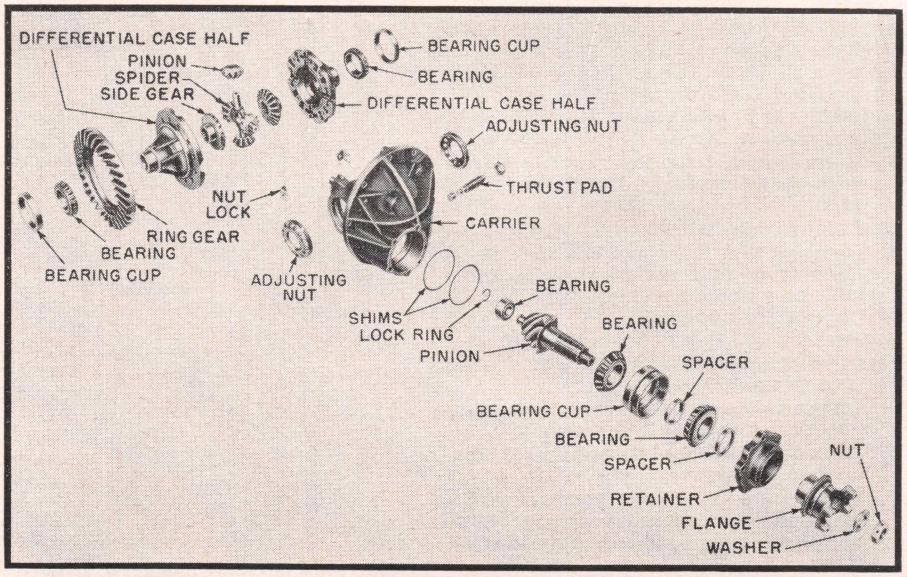

Fig. 22 Exploded view of differential carrier assembly. GMC Models H-050 and H-072

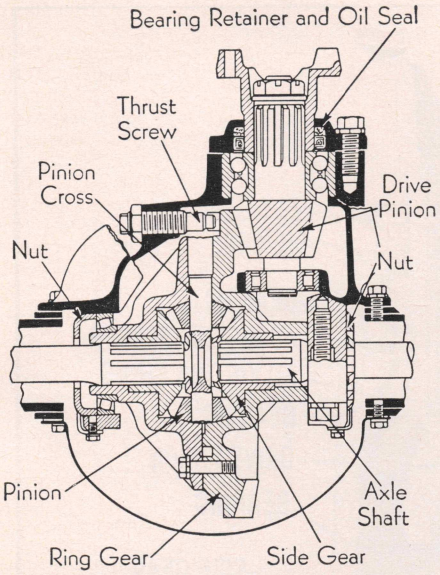

Fig. 23 Sectional view of differential carrier. GMC models H-075, H-105, H-110, H-125, H-130. This unit is similar to Fig. 22 except that ball bearings are used on the drive pinion

with stand jacks under frame side rails.
2. Remove rear wheels.
3. Remove two trunnion bearing "U" bolts from rear yoke and split rear universal joint. Tape bearings to trunnion.
4. Swing propeller shaft to one side and tie to frame side rail.
5. Disconnect hydraulic brake line connection at rear axle housing.
6. On H-050 and H-072 axles, disconnect hand brake cables from cross shaft levers and remove cables from clamps on frame.
7. On H-050 and H-072 axles, disconnect shock absorber links or eyes from anchor plates or anchor bracket.
8. On all models, while supporting axle assembly with hydraulic jack, remove spring "U" bolts and lower axle assembly to floor.
9. Reverse the foregoing procedure to install the axle assembly.

Service Note

The following operations may be performed without raising the truck or removing the axle assembly from the vehicle.

Differential Carrier, Remove

1. Drain lubricant, remove axle housing cover and axle shafts.
2. Remove two trunnion "U" bolts from rear yoke and split rear universal joint. Tape bearings to trunnion.
3. Swing propeller shaft to one side and tie to frame side rail.
4. Remove bolts which attach carrier to axle housing. Support carrier with floor jack and roll it from under truck.

Differential Carrier, Disassemble

1. Remove ring gear thrust pad.
2. Remove differential bearing caps and adjusting nuts by tapping on bosses of caps until free from dowels. *Do not use screwdriver to pry off cap as this may damage machined face of cap.*
3. Remove differential and ring gear from carrier housing.
4. Unfasten pinion bearing retainer from carrier.
5. Remove pinion from carrier, using a brass drift against the pilot end of the pinion shaft, if necessary.
6. On H-050 and H-072 axles, remove shims from inside of carrier housing, making note of the number and total thickness of shims removed.
7. Remove nut from pinion shaft.
8. Drive bearing retainer and flange from pinion shaft.

Pinion Oil Seal, Replace

Drive oil seal and packing from bearing retainer. Soak new seal and packing in engine oil to provide initial lubrication. Install felt packing in bottom of bearing retainer recess and press oil seal in place. Make sure open end of leather in oil seal is toward pinion bearing.

Pinion Bearing, Replace

1. Remove rear pinion bearing snap ring and press bearing from shaft.
2. Press front pinion bearing from shaft. *On H-050 and H-072 axles, the outer race, two inner race and roller assemblies and spacer should always be installed as a group as the spacer is pre-selected to give proper pinion bearing adjustment.*
3. On H-050 and H-072 axles, press one new inner race and roller assembly on the pinion shaft, using a 2″ pipe, applying pressure against the inner race. Large diameter of bearing race should be toward pinion. Place spacer and outer race on shaft and press on other inner roller. Small diameter of this race should be toward pinion.
4. On H-075, H-105, H-110, H-125 and H-130 axles, press new double row pinion bearing on shaft, using a piece of 2″ pipe, applying pressure to inner race. This bearing must be installed so that extended portion of inner race is toward the back of pinion gear teeth.
5. On all models, press rear pinion bearing on shaft, using driver to apply pressure to inner race. Chamfered side of inner race should be toward pinion.
6. Install lock ring.

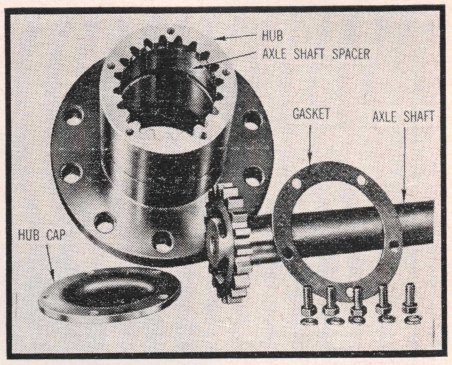

Fig. 25 Splined hub and axle shaft parts. GMC Models H-075, H-105, H-110, H-125, H-130 axles

7. Position pinion bearing retainer over hub of drive flange.
8. Install spacer on pinion shaft (H-050 and H-072 axles). On all models, install drive flange and bearing retainer with washer and nut.
9. Tighten pinion shaft nut to a torque load of 160-280 lb. ft. Lock nut with cotter pin.

Differential, Disassemble

1. Check differential case to make sure two halves are marked so they may be reassembled in the same position.
2. Remove attaching bolts and separate case from cover and remove pinion gears, spider and side gears.
3. Tap back of ring gear with soft hammer to remove gear from case.
4. Pull off differential bearings.

Differential, Assemble

1. Install differential bearings.
2. Install two guide pins to ring gear diametrically opposite each other. These pins can be made from ½″-20 x 2″ capscrews with heads cut off and slotted for use of screwdriver.
3. Start guide pins through holes in case flange and tap ring gear on case.
4. Place differential pinions on spider. Then assemble side gears and pinions to left half or cover of differential.
5. Assemble right half to left half, being sure to line up marks on both halves.
6. Install ring gear bolts and washers and tighten evenly until ring gear is flush with case flange.
7. Remove guide pins and install remaining bolts. Then tighten all bolts to 85-95 lb. ft. torque.

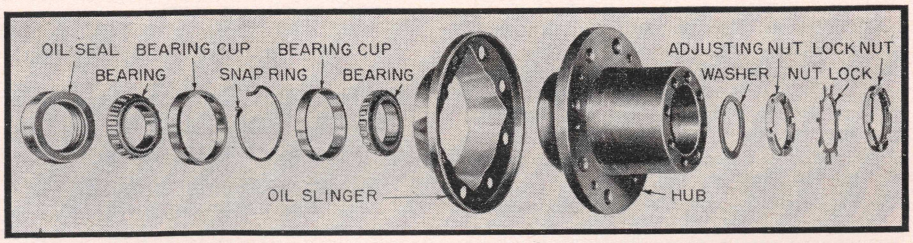

Fig. 24 Exploded view of wheel hub. GMC Models H-050 and H-072 axles

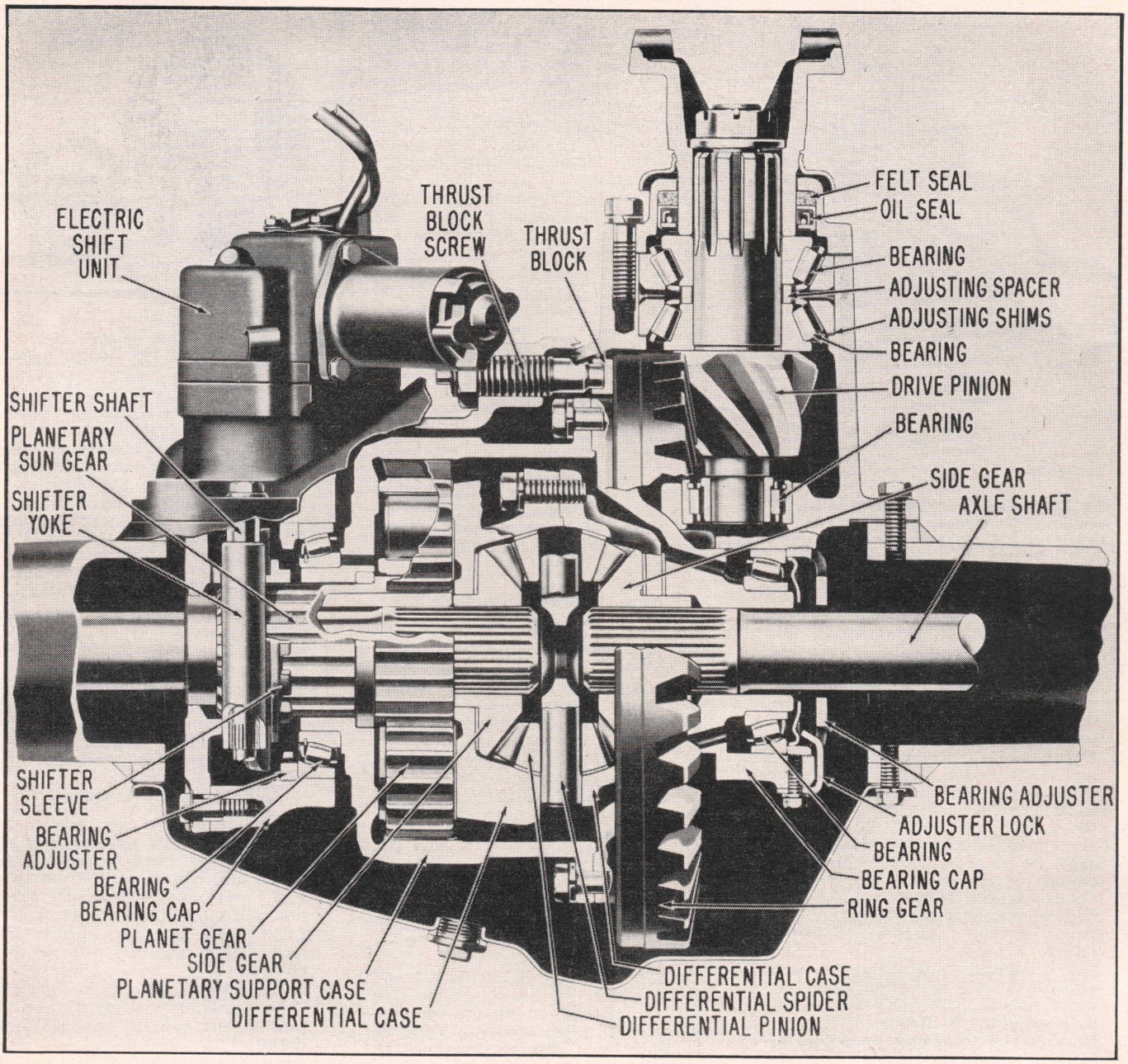

Fig. 26 GMC two-speed axle

Differential Carrier, Assemble H-050 & H-072 Axles

To facilitate adjusting of pinion depth in the ring gear, there are four shims available for service use. They are .012, .015, .018 and .021″. If the original ring gear and pinion are to be used, it is advisable to replace the same thickness of shims in the carrier housing counterbore that were removed. If a new ring gear and pinion are used, one .015 and one .018″ shim should be used as a standard starting setup.

1. Grease shims and place against bearing outer race.
2. Place new gasket on pinion bearing retainer and press pinion into carrier to avoid damaging shims.
3. Install and tighten pinion bearing retainer bolts to 85-95 lb. ft. torque.
4. Place races over differential bearing rollers.
5. Install differential into carrier and install adjusting nuts.
6. Install differential bearing caps, making sure marks on caps line up with marks on carrier.
7. Install cap bolts and tighten them until lock washers just flatten out.

Differential Carrier, Assemble H-075, H-105, H-110, H-125 & H-130 Axles

1. Install differential bearings.
2. Assemble pinion to carrier with new gasket and tighten pinion bearing bolts securely.
3. Install differential assembly in carrier and install adjusting nuts.
4. Install differential bearing caps, making sure marks on caps line up with marks on carrier.
5. Install bearing cap bolts and tighten until lock washers just flatten out.

Ring Gear & Pinion, Adjust

This adjustment is accomplished in the same manner as outlined for 1954 ½ ton rear axle.

Ring Gear Thrust Pad, Adjust

Inspect the bronze tip of ring gear thrust pad and replace if worn. Install the thrust pad and tighten the screw until the bronze tip engages the back of the ring gear while rotating the gear. Back off the screw 1/12 of a turn and

tighten lock nut. Make sure the screw does not turn during the locking process. This adjustment provides .005 to .007" clearance between ring gear and thrust pad.

GMC 2 SPEED AXLE

This axle, Fig. 26, is a planetary type which is shifted by the driver as operating conditions require. Movement of the control valve shift lever causes the shift chamber at the axle housing to select the desired speed range. The axle shafts and differential carrier can be removed for repair without removing the axle assembly from the vehicle.

Disassemble

1. Remove axle shafts.
2. Place jack under carrier and remove carrier-to-housing cap screws.
3. Break carrier loose with mallet and work it out of housing.
4. Place carrier in repair stand.
5. Remove anchor from carrier.
6. Remove shifter assembly.
7. Drive out shifter yoke shaft.
8. Slide shifter yoke and sleeve to the left, removing sleeve and yoke from end of sun gear.
9. Remove differential bearing adjusting lock from each side.
10. Remove oil trough.
11. Remove thrust screw and pad.
12. Remove differential bearing caps and adjusters.
13. Remove differential and planet assembly from housing.
14. Mark ring gear and both halves of planetary support case by marking lines on case and gear.
15. Remove drive gear from planetary support case and cover.
16. Lift off planet support case.
17. Remove thrust washer used between planet cover and differential.

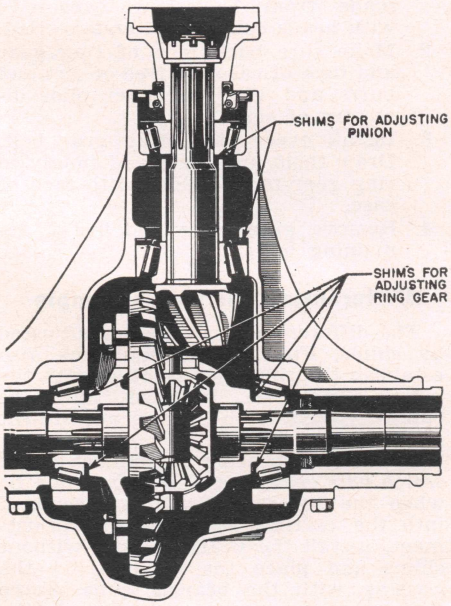

Fig. 27 Spicer semi-floating axle showing adjusting points

18. Remove sun gear and four planet gears.
19. Mark or tag all gears so they can be reassembled exactly as removed.
20. Separate differential case halves. Case halves and spider are stamped on all four sides with matching numbers to assist in assembly.
21. Remove side gears and thrust washers from each case half.
22. Remove differential side bearings.
23. Loosen bolts attaching pinion bearing oil seal retainer to carrier. As bolts are loosened they will contact deflector flange on U-joint flange.
24. Tap universal joint yoke with mallet, driving pinion, bearings, and retainer assembly gradually from carrier housing while continuing to loosen attaching bolts.
25. Remove shims from carrier housing and note the amount required in back of the double thrust bearing.
26. Remove rear pinion bearing from carrier housing.
27. Separate U-joint yoke from pinion.
28. Remove pinion bearing oil seal retainer and seal from yoke.
29. Press off double thrust bearing.

Reassembly

Before axle is reassembled, make sure that all oil passages are thoroughly clean. Apply a thin coating of differential lubricant to all thrust and bearing surfaces to prevent scoring of parts when vehicle is first placed in service.

Pinion Assembly

1. Press bearing inner race on pinion.
2. Press double row thrust bearing on pinion.
3. Install pinion rear bearing in differential carrier.
4. Install original shim pack in carrier. Grease shims thoroughly. If original ring gear and pinion are reinstalled, use shims that were removed. If new gears are used, start with one .015" and .018" shim (total .022").
5. Position retaining cap screws and lock washers in oil seal retainer and install retainer on propeller shaft yoke.
6. Install new washer and nut and tighten securely.
7. Install pinion assembly into carrier and tap on yoke nut until cap screws can be started. Tighten cap screws alternately and evenly until pinion assembly is in place.

Differential and Planetary Assembly

1. Assemble differential parts into planetary half of case, then place plain half of case over assembled parts. *Be sure that all parts are assembled as indicated by marks stamped or tagged at time of disassembly. Also see that side gear with longest hub is on bevel gear side.*
2. Fasten differential case halves and tighten securely.
3. Install bearing cones at planetary support case cover.
4. Place ring gear on wood blocks with gear teeth down and install several guide pins in ring gear bolt holes. Then position planetary case cover over guide pins with marks in alignment.
5. Place a thrust washer in planetary support case cover, then install the assembled differential in case cover.
6. Install the four planet gears on differential case with long hub of gears away from case.
7. Install large planetary support case over the assembled parts with marks in alignment.
8. Fasten two halves of planetary support case and bevel gear together.

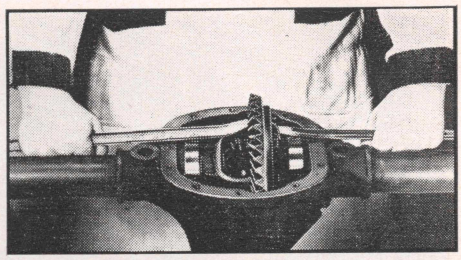

Fig. 28 Prying differential from housing. Spicer axle

Differential and Planetary Installation

1. Locate bearing races on each side, then install differential and planetary assembly in differential carrier.
2. Install differential bearing adjusting nuts on each side. See that oil baffle is in place in right adjusting nut.
3. Install differential bearing adjusting caps and dowels at each side.
4. Install cap bolts and lock washers and tighten snugly or until bearing adjusting nuts can just be turned.

Ring Gear and Pinion Adjustment

1. Loosen right hand adjusting nut and tighten left hand adjusting nut.
2. Continue tightening left adjusting nut until all backlash between ring gear and pinion is removed.
3. Back off left adjusting nut approximately two notches to a point where notch in nut is aligned with lock.
4. Tighten right adjusting nut firmly to force differential and planet assembly in solid contact with left adjusting nut. Loosen right adjusting nut until it is free of its bearing, then retighten snugly against bearing. Tighten right nut from one to two notches more to a locking position. This method provides for the proper pre-load on the bearings.
5. Mount a dial indicator on the housing and check the backlash between ring gear and pinion which should be .005" to .008". Whenever backlash is more than .008", loosen right adjusting nut one notch and tighten left nut one notch. If backlash is less than .005", loosen left nut one nut and tighten right nut one notch. When backlash has been adjusted, tighten bearing cap bolts securely. Again check backlash and then install adjuster locks.

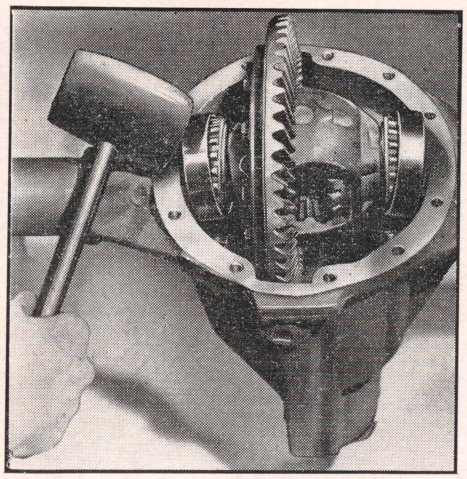

Fig. 29 Installing differential and bearing cups. Spicer axle

Checking Pinion Depth

1. Coat ring gear teeth lightly with red lead or prussian blue. Then turn the pinion several revolutions in both directions while applying pressure to ring gear to create a load.
2. Examine the pattern on the ring gear. If the pinion depth is correct, the tooth pattern will be centered on the pitch line and toward the toe of the ring gear (see the *Rear Axle Chapter* for explanation of tooth patterns).
3. If the pattern is below the pitch line the pinion is too deep and it will be necessary to remove the pinion and increase the shim thickness between the pinion bearing and differential carrier housing.
4. If the pattern is above the pitch line on the ring gear teeth, the pinion is too shallow and it will be necessary to decrease the shim thickness.
5. Checking the pinion depth will make some change in the backlash; therefore, it may be necessary to readjust the backlash.
6. Tighten the bearing cap screws, recheck backlash and install adjusting nut locks.
7. Install oil trough.

Ring Gear Thrust Pad Installation

1. Inspect the bronze tip on ring gear thrust pad and replace if worn.
2. Install thrust pad and tighten until pad contacts ring gear. Then back off 30° to obtain a clearance of .005″ to .007″. Tighten lock nut, making sure screw does not turn.

Shifter Assembly Installation

1. Install shifter yoke on sleeve and install assembled parts on sun gear.
2. Install shifter lever and shaft through adapter and housing, then into the shifter yoke, mating the two parts carefully to avoid damage to the splines. The shaft must be free to avoid binding when the shifter assembly is installed.
3. Position shift anchor at left of differential carrier with anchor knob in bushing and opposite end secured to bearing cap with cap screw and lock washer.

Differential Carrier Installation

1. With new gasket in place, place carrier on roller jack, using a suitable wood block as a support.
2. Use a long drift to align assembly and install it in axle housing.
3. Install and tighten cap screws securely.
4. Use new gasket and install electric shift units. (For service on the Electric shift unit, see the *Eaton Electric Shift section of the Rear Axles Chapter.)*

SPICER AXLE

Integral Housing Type

Inasmuch as the axle tubes are pressed into the differential carrier to form a one-piece housing, the rear axle assembly must be removed from the chassis when it becomes necessary to overhaul the unit.

Disassemble, Fig. 27

1. Remove axle shafts. Axle shafts may be pulled out only far enough to clear differential side gears.
2. Drain lubricant and remove rear cover.
3. Make sure differential side bearing caps and axle housing are marked, then remove the side bearing caps.
4. Pry differential from housing, Fig. 28.
5. Remove side bearing cups.
6. Pull off side bearing and adjusting shims, tagging the shims for identification on reassembly.
7. Unfasten ring gear from case.
8. Drive out differential pinion shaft pin and pull out the shaft, pinions and side gears.
9. Hold companion flange from turning and remove flange nut.
10. Pull flange from pinion shaft.
11. Remove pinion from carrier by tapping on front end with soft hammer.
12. Remove pinion shaft bearing oil seal and bearings from carrier, keeping separate the shim pack at each bearing.

Pinion & Bearings, Replace

If the original ring gear and pinion are being used in the original carrier, use the original shim packs at each bearing, Fig. 27. If a new pinion or differential carrier is installed, note the markings on the end of the pinion gear and on the differential carrier to obtain the correct thickness of shimming to be used with these parts from your supplier. The shims behind the rear bearing establish the correct pinion depth.

1. Press the rear pinion bearing cup in the housing with the proper thickness of shims. Press the rear pinion bearing on the shaft.
2. Install the front bearing cup and shims, and front bearing.
3. Install the companion flange and, while holding the flange from turning, tighten the nut to a torque load of 200-220 lb. ft.
4. Check the pinion bearing pre-load with a spring scale and heavy cord wrapped around the companion flange. Pull on the spring scale. The torque required to rotate the pinion is 10-30 inch lbs. If not within these limits, add or remove shims from behind the front bearing to obtain the proper pre-load.
5. Remove the companion flange and install a new oil seal (well soaked). Reinstall the companion flange and tighten the nut to a torque load of 200-220 lb. ft.

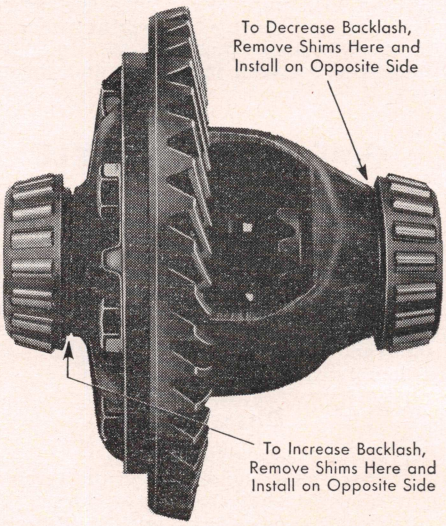

Fig. 30 Method of correcting backlash between ring gear and pinion. Spicer axle

Ring Gear, Replace

1. Install guide pins in every other hole in the ring gear. These pins can be made from 1½″ long capscrews with heads cut off and ends slotted.
2. Make sure back face of ring gear and face of case are free of dirt and burrs and slip gear over pilot diameter of case.
3. Install every other ring gear bolt. Draw them up evenly and snugly so ring gear face is flush with face of case.
4. Remove guide pins and install remaining bolts.

Differential Carrier, Assemble

The differential bearings are adjusted by shims, Fig. 27. These shims also establish the ring gear position with the pinion. Therefore, backlash must be checked whenever a bearing adjustment is made.

The correct bearing adjustment is one which will provide a .015-.020″ pinch fit when the differential unit is assembled into the carrier. To make the adjustment, install the bearing cones without shims and place the assembly in the housing with the bearing cups. Force the unit to one side and check the clearance between the bearing cup and differential case with a feeler gauge.

When the clearance is determined, select shims of this amount plus .015-.020″ extra to establish the proper pre-load.

Remove the differential bearings again and divide the shims into two packs of equal thickness and install on each side and replace the bearings. Reinstall the unit in the carrier. This operation is made easier by cocking the bearing cups slightly when the differential is placed in the housing and then tapping them lightly with a mallet, Fig. 29. However, when installing the differential in the housing, be sure the ring gear teeth mesh with the pinion teeth before tapping the bearings in place.

After the bearing cups are firmly in place, install the bearing caps. The bearing caps and gasket surface of the housing are marked with a horizontal numeral and on the other side by a vertical numeral. The position of the numerals should correspond when reinstalling the bearing caps.

Ring Gear & Pinion Backlash, Adjust

Mount a backlash gauge indicator on the carrier and start checking for the correct backlash between the ring gear and pinion. If the backlash is not within the limits of .004″ to .009″, it will be necessary to change the arrangement of the shims back of the bearings. Make corrections in backlash according to Fig. 30, bearing in mind that shims removed from one side must be installed on the opposite side so that the total shim thickness of the right and left side will remain unchanged, and the bearing adjustment undisturbed.

Gear Tooth Contact Pattern

Allowable variations in the carrier or drive pinion may cause the pinion to be too far in or out even when shimmed properly. Thus, the tooth contact must be tested and corrected as necessary or the gears may be noisy.

Paint the ring gear teeth with a light coating of red lead, white lead or prussian blue. Revolve the gears and observe the contact, referring to Figs. 13 to 17.

Air Suspension

DESCRIPTION

Models 550 to 860

The air suspension system, Fig. 1, basically is made up of air chambers, air bellows, height control valves, radius rods and shock absorbers. Suspension supports and air beams provide means of connecting the suspension system to the axles. Operation of the system is completely automatic, maintaining a constant ride-height regardless of load.

Air Chambers & Bellows

The tubular front axle has a two-compartment center section that provides a separate chamber for bellows at each end of the front axle. Two air beams act as separate chambers for the bellows directly beneath the frame side rails at each end of the rear axle.

Four air bellows are mounted at the front axle, two each under each frame side rail. Larger bellows are mounted at the rear axle also under the frame side rails. Two bellows are mounted at the single rear axle, four at tandem axles. These bellows are held at the top and bottom by bead rings.

Height Control Valves

Air pressure in the air chambers controls the spring rate. This pressure is automatically varied in proportion to vehicle load. Four height control valves, two at front axle and two at rear axle, maintain constant vehicle height for all load conditions. The valves operate independently, levelling the vehicle to compensate for an unevenly distributed load. Height control valve operating arms are connected to the axles by adjustable links.

Radius Rods

Radius rods at the front and rear axles transmit driving and braking forces from axle to frame. A lateral radius rod at each axle controls the lateral position of the axles under the vehicle. A stabilizer bar attached to the frame side rails and rear axle controls vehicle sway. All linkage is rubber mounted and needs no lubrication.

OPERATION

Compressed air, metered into the air suspension system by the height control valves, is taken from the air tank. The pressure regulating valve, however, allows removal of air from the tank only when pressure in the tank is above 65 psi. The height control valves are actuated by the relative movement between the frame and axles. As the frame settles toward the axles under increased load, valve arms linked to the axles are moved upward. As the arms operate the valves, a sufficient volume of air is admitted to each set of bellows to raise the frame to normal ride height.

The distance between the axle and frame will increase as load is removed. The height control valves, in this case, will exhaust air from the bellows in proportion to the decrease in load.

The height control valves are designed to operate only when the load is increased or decreased. These valves do not respond to rapid relative motion between axles and frame such as that caused by road irregularities.

Each air chamber with bellows attached forms a single compartment for compressed air. The bellows serve as a flexible connection between the frame and axles. Flexing of the air bellows results in alternate increase and decrease in the air volume within the compartment. This action absorbs road shocks in the same manner as an inflated rubber tire cushions shock caused by road roughness.

Shock absorbers are double-acting, aircraft type. Mounted at both ends of each axle, these shock absorbers control axle rebound and further cushion the ride. Radius rods maintain the position of each axle against lateral, longitudinal and torsional movement.

CAUTIONS

Working Clearance

Before work is done from a creeper under the vehicle, blocks should be placed

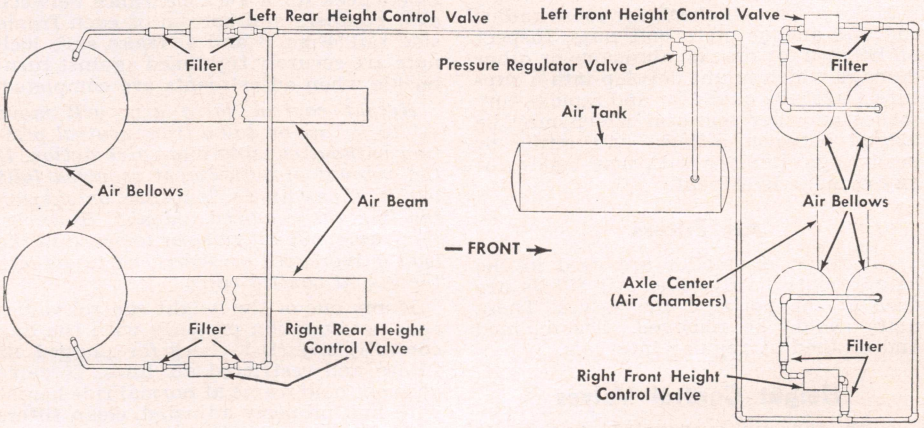

Fig. 1 Typical air suspension system

between the axle and frame to provide proper clearance and avoid possible injury.

Lifting Vehicle

When towing or using hoist do not raise truck and permit the axle to hang unsupported. Air pressure will be exhausted from the suspension system and the weight of the axle hanging on deflated bellows may damage bellows. To avoid possible damage, chain the axle to the frame.

Air Beams

Avoid drilling holes in the air beams or front axle center. Do not strike these parts with a heavy hammer as air leaks may result.

No Lubricant

Periodic use of lubricant of any kind on radius rod and air beam rubber bushings is unnecessary. Keep surface of bellows free from oil and grease. When installing bushings in radius rods or air beams, however, a vegetable oil base rubber lubricant can be used on rubber bushing surfaces to help work bushing into position.

MAINTENANCE

Air Tanks

Air tanks must be drained at regular intervals to keep air system as free from moisture as possible.

Air Leakage Test

With the main air system at normal operating pressure (100-105 psi) coat all air suspension system air line connections and bellows mountings with a solution of soap and water. Air leakage will produce soap bubbles. No leakage is permissible.

Leakage at an air line connection can sometimes be stopped by tightening the connection. When an air line connected with a rubber sleeve is used, replace rubber sleeve. If tightening the bellows bead ring bolts does not stop leakage at the bellows mounting, remove, inspect and, if necessary, replace bellows.

Mounting and Bellows Inspection

Make a wrench check for loose radius rod and anchor plate bolt nuts. Inspect all bellows for cracks, abrasions or other damage which might develop into a rupture. Carefully check for and remove tiny stones or other material which may be lodged between bellows and girdle or bead rings. Replace with new bellows if any damage is evident.

Air Filters

Air filter assemblies are used in the height control valve line. Air filters are used at the ports of the valves. These units should be removed, disassembled and cleaned at regular intervals.

Height Control Valves

With the air suspension system at operating pressure of 100-105 psi, the correct normal ride height is determined by measuring the clearance between the axles and frame at points indicated in Figs. 2, 3 and 4. If necessary, adjust the length of the valve arm link to obtain proper clearance. Lengthen the link to increase clearance, and shorten the link to decrease clearance.

At the front axle, check for a 7″ clearance between air bellows support brackets and bellows top plates, Fig. 2. At rear axle, check for a 2¾″ clearance between axle bumpers and bottom of each frame side rail, Figs. 3 and 4. Make sure lock nuts are securely tightened against turnbuckle when adjustments are completed.

Height control valve arm will move $\frac{3}{16}$″ to ¼″ up or down from neutral position without causing any valve action. If the amount of adjustment required falls within these limits, lengthen or shorten the link the required amount. However, the frame will not raise or lower until the load is increased or decreased to actuate the height control valve.

If any one of the height control valves does not function properly with the link correctly adjusted, check for clogged air filters and restricted air lines. If valve does not hold frame at normal ride height with link properly adjusted, clean filters and with no restrictions in the air lines, the height control valve should be removed and overhauled or replaced with a new or rebuilt unit.

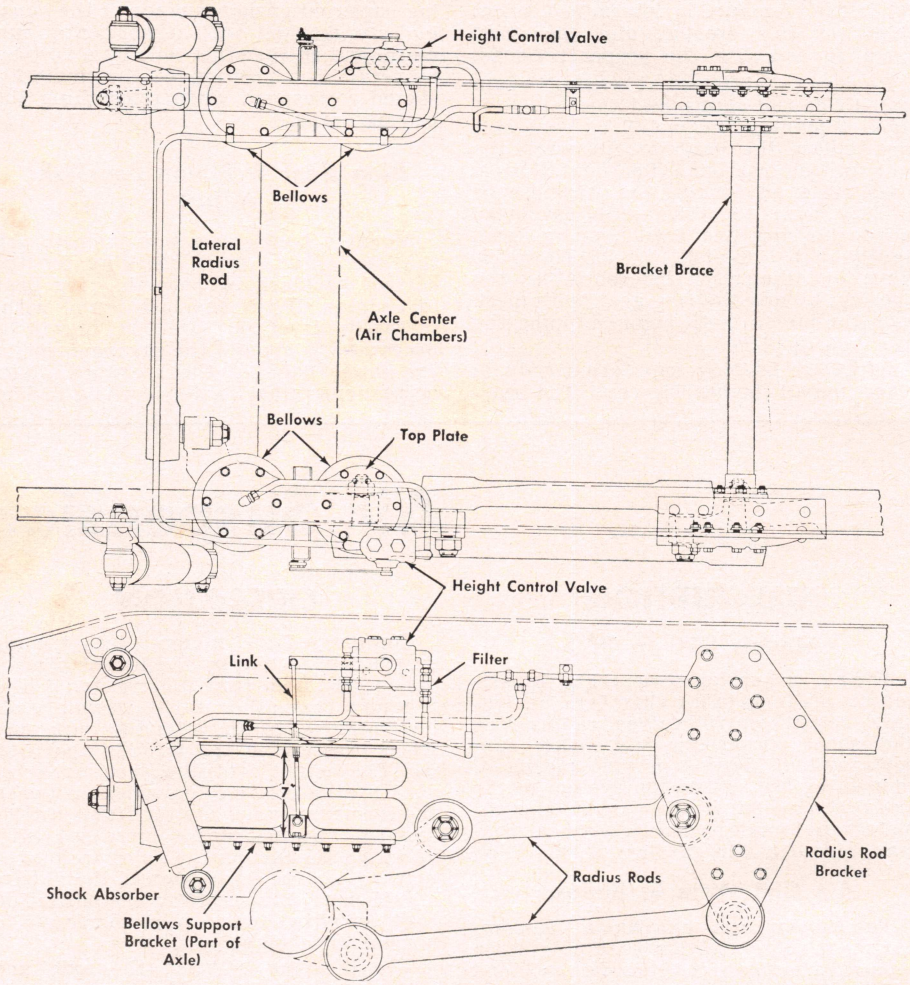

Fig. 2 Typical front air suspension installation

FRONT AXLE

Removal, Fig. 2

1. Block rear wheels to prevent vehicle from rolling. Chain axle to frame. Lift frame with jacks to relieve load from suspension and to provide clearance. Securely block frame in raised position.
2. Lower jacks until frame rests on blocks. Jack up front axle and remove chains.
3. Remove wheels. Disconnect air hoses from brake chambers.
4. Release compressed air from supply system by opening drain cock in air tank.
5. Disconnect drag link from steering arm. On models equipped with power steering, disconnect ends of power cylinder from tie rod and axle, leaving cylinder hoses connected.
6. Disconnect height control valve links from brackets on axle. Pull down on valve arm to release compressed air from chambers and bellows.
7. Disconnect upper, lower and lateral radius rods at axle.
8. Remove nuts from bolts attaching

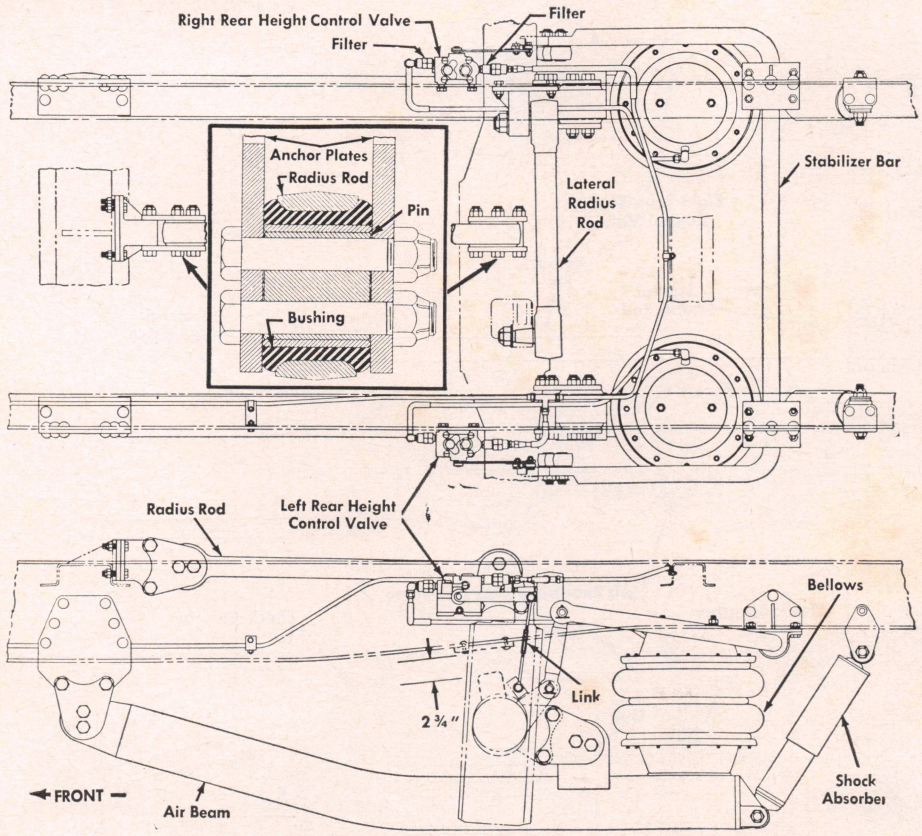

Fig. 3 Typical single rear axle air suspension installation

air bellows lower bead rings to support bracktes on axle.

9. Remove shock absorbers. Lower jacks under axle until bellows bead ring bolts clear bellows bracket and axle clears underside of vehicle. Carefully pull jacks and axle assembly from under vehicle.

Installation

1. If bellows were removed from top plates, install bellows before axle is positioned under vehicle. See that mating surfaces on bellows, bead rings, top plates and support brackets are clean and smooth. Insert bellows bead ring bolts through top plates and attach with nuts and washers. The two long bolts also attach top plate to frame side rail. The stop extension on top plates should be toward front of vehicle. Tighten nuts alternately to draw bead ring evenly against top plates. Tighten bead ring nuts to a torque of 9-14 lb. ft.
2. Clean all dirt, grease or paint out of tapered holes in radius rod brackets. All surfaces contacted by rubber bushings must be clean and dry.
3. Clean surface of bellows support brackets. Support axle with jacks.
4. Carefully move jacks and axle into position under vehicle. Position bellows support brackets directly under bellows. Raise axle at each end until bellows bead ring bolts can be in serted through brackets. Install nuts and washers on bead ring bolts and tighten alternately to draw bead rings evenly against bracket surface. Tighten nuts to 9-14 lb. ft. torque.
5. Connect radius rods and shock absorbers.
6. With axle in normal ride height position, Fig. 2, connect height control valve links to brackets. Adjust links, if necessary, to permit free installation of link bolts without moving height control valve arms out of neutral position.
7. Connect drag link and steering arm.
8. On models equipped with power steering, connect power cylinder to tie rod and axle. Locate tie rod clamp as follows: With wheels turned to extreme right against wheel stops (extreme left on V8 "F" models) and piston rod contracted, position clamp on tie rod. Dimension used to locate clamp on tie rod depends on type of cylinder used. When cylinder has uniform diameter throughout length, position tie rod clamp to provide 5¾" dimension between end of power cylinder head and outer end of piston rod socket. The other type cylinder has a small diameter neck toward the head end of the cylinder. With this cylinder, position clamp to provide 4 11/16" dimension between end of power cylinder head and outer end of piston rod socket. With power cylinder parallel to axle, tighten clamp bolts to 60-65 lb. ft. torque.
9. Connect hoses to brake chambers and install wheels.
10. Raise vehicle and remove blocks from beneath frame. Lower vehicle to floor and remove jacks.
11. Build up pressure in system to normal 100-105 psi. Allow a few minutes for suspension system pressure to build up, then recheck ride height clearance. When installation is completed, make air leak test with soapy water.

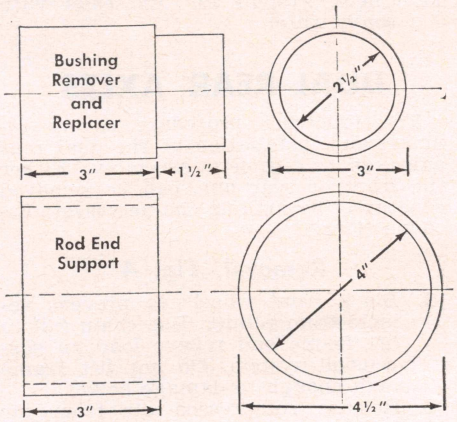

Fig. 5 Dimensions of tools for replacing radius rod or air beam bushings

SINGLE REAR AXLE

Removal, Fig. 3

1. Block front wheels to prevent vehicle from rolling. Jack up frame far enough to relieve load on suspension system. Place blocks or solid supports under frame ahead of air beam frame brackets.
2. Release compressed air from air brake system by opening drain cock at air tank. Disconnect air brake hoses at each brake chamber.
3. Disconnect propeller shaft at axle.
4. Remove shock absorbers.
5. Disconnect height control valve links and stabilizer bar links from axle. Pull down on both valve arms to release compressed air from beams and bellows. Disconnect air line at both bellows upper supports.
6. Unfasten rear bellows upper support from frame side rails.
7. Disconnect axle end of radius rod. At top of axle, disconnect both ends of lateral radius rod.
8. Position jack under axle to prevent axle tipping and causing personal injury. Disconnect air beams at frame brackets and at axle.
9. Roll axle assembly from beneath vehicle. Raise frame for additional clearance, if necessary.

Installation

1. Roll axle into position under vehicle.
2. Install air beams and bolt loosely at axle and frame brackets. Clean all dirt, grease or paint from radius rod pins and tapered holes in lateral radius rod brackets. Install radius rod.
3. Raise or lower axle to 2¾" dimension between axle bumpers and frame side rails. Maintain this dimension while tightening anchor

Fig. 4 Typical dual rear axle air suspension installation

plate lock nuts to a torque of 180-220 lb. ft. Then tighten lateral radius rod lock nuts to a torque of 400-450 lb. ft.

4. Install shock absorbers. Connect stabilizer bar link to axle.
5. With axle in normal ride height position, Fig. 3, connect height control valve links to brackets. Adjust links if necessary to permit free installation of link bolts without moving height control valve arms out of neutral position.
6. Insert bellows upper support bolts in holes in frame side rails. With each support evenly seated against underside of frame side rail, install washers and nuts and tighten securely.
7. Connect propeller shaft.
8. Connect air line to each bellows upper support. Connect air brake hoses at each brake chamber.
9. Raise vehicle and remove blocks from beneath frame. Lower vehicle to floor and remove jacks.
10. Build up air pressure to the normal 100-105 psi operating pressure. Allow a few minutes for pressure to build up, then recheck riding height clearance.
11. Check system for air leaks with soapy water.

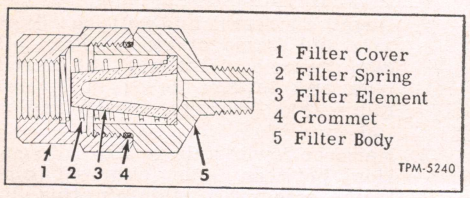

Fig. 6 Air filter assembly

DUAL REAR AXLES

The following procedure covers removal and installation of the dual rear axles as a complete assembly. Either the front or rear unit can be removed separately by making the necessary disconnections.

Removal, Fig. 4

1. Block front wheels to prevent vehicle from rolling. Use chain fall to lift frame and relieve load on suspension system. Do not lift frame high enough to damage bellows.
2. Release compressed air from air brake system by opening drain cock at air tank.
3. Disconnect propeller shaft from rear axle front unit.
4. Disconnect air lines from brake chambers and from differential lock.
5. Disconnect height control valve links. Pull down on both valve arms to release compressed air from beams and bellows.
6. Disconnect air lines at both front bellows upper supports.
7. Remove shock absorbers.
8. Disconnect stabilizer bar link from axle.
9. Remove two nuts attaching each bellows upper support to frame.
10. Remove two bolts from axle end of lateral radius rod at each axle. Disconnect each lateral radius rod from frame bracket.
11. Remove radius rod between rear axle front unit and frame crossmember.
12. Remove two radius rods between rear axle front unit and radius rod frame brackets.
13. Raise frame to provide clearance for removing dual rear axle assembly. Block frame side rails securely at rear of radius rod frame brackets.
14. Roll axle unit from under vehicle.
15. If necessary to separate axles, support each axle to keep axles in an upright position. Disconnect air beams and radius rod.

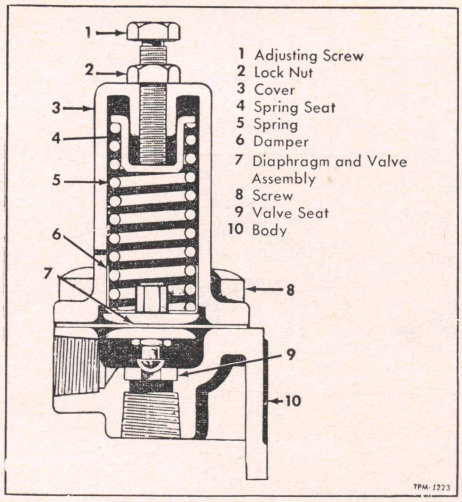

Fig. 7 Pressure regulating valve

Installation

1. If removed, install four air bellows and upper brackets on air beams. Align front and rear axle and attach air beams and radius rod. *Bolt unit together loosely.*
2. Roll dual axle assembly into place under vehicle frame. Remove blocks from under frame and lower frame to normal position.
3. Install upper radius rod between rear axle front unit and frame cross-member.
4. Install two radius rods between axle and radius rod frame brackets.
5. Clean all dirt, grease and paint from rod pins and tapered holes in lateral radius rod frame brackets. Install radius rod at each axle.
6. Raise or lower axle to 2¾″ dimension between axle bumpers and frame side rails, Fig. 4. Maintain this dimension while tightening anchor plate lock nuts to 180-200 lb. ft. torque. Tighten lateral radius rod lock nuts at frame bracket only to 400-450 lb. ft. Tighten lateral radius rod axle bracket bolt nuts securely. Install lock wires in heads of all cap screws which thread into welded nuts or tapped holes in axle housing.
7. Insert bellows upper support bolts in holes in frame side rails. With each support evenly seated against underside of frame side rail, install two lock washers and nuts and tighten securely.
8. While holding the 2¾″ dimension between frame and axle bumpers, connect height control valve links to brackets. Adjust links if necessary to permit free installation of link bolts without moving height control valve arms out of neutral position.
9. Connect propeller shaft, install shock absorbers and connect stabilizer bar link.
10. Connect air brake lines at each brake chamber. Connect air line to each bellows front upper support. Connect differential lock air line at rear axle front unit.
11. Build up air pressure in system to normal operating pressure (100-105 psi). Allow a few minutes for pressure to build-up, then recheck ride height clearance.
12. Check system for air leaks with soapy water.

RADIUS RODS

To remove radius rods, raise frame just far enough to remove load from suspension system. Block frame securely. When difficulty is encountered in removing tapered pin, use a suitable wedge tool.

When installing radius rods, clean all dirt, grease or paint from rod pins and tapered holes in mounting brackets. Before final tightening of radius rod and air beam anchor plate bolts and nuts, obtain correct clearance dimensions as shown in Figs. 2, 3 and 4. If connections are tightened without first obtaining this clearance, a torsional preload will be imposed on rubber bushings when the frame assumes normal height relative to axles.

When it becomes necessary to replace radius rod bushings, a press and tools made to the dimensions shown in Fig. 5 should be used.

AIR BELLOWS

Removal

1. Support frame with wood blocks.
2. Place 2¾″ blocks between rear axle bumpers and frame side rails.
3. Place 7″ blocks between front axle bellows supports and top plates.
4. If compressed air has been exhausted due to leakage, frame should be raised and blocked to facilitate replacing bellows.
5. If system is pressurized, disconnect height control valve link and pull valve arm down to exhaust compressed air from air chamber and bellows. *Do not disturb height control valve adjustment.*
6. Separate bead rings from support bracket and top late at front axle or from upper and lower support flanges at rear axle.

Installation

Examine bellows inside and out for evidence of cracks, punctures, deterioration or chafing. Replace with new bellows if any damage is evident. Bead rings and girdle ring can be removed from defective bellows and installed on new bellows. Clamping surfaces of bead rings must be clean and smooth. When installing bead rings on bellows, holes in upper and lower rings must be aligned so that no twist will be imposed on bellows during installation. *Undercoating material, if used, should be kept off surface of bellows, as this material could eventually cause air leaks.*

After bellows is installed, build up pressure in system to normal operating pressure. Remove blocks at axles. Check for leakage at upper and lower bellows mounting with soapy water. Any leakage evidenced by the appearance of bubbles should be corrected.

AIR FILTERS

Air filters, Fig. 6, are used at inlet and outlet ports of front and rear height

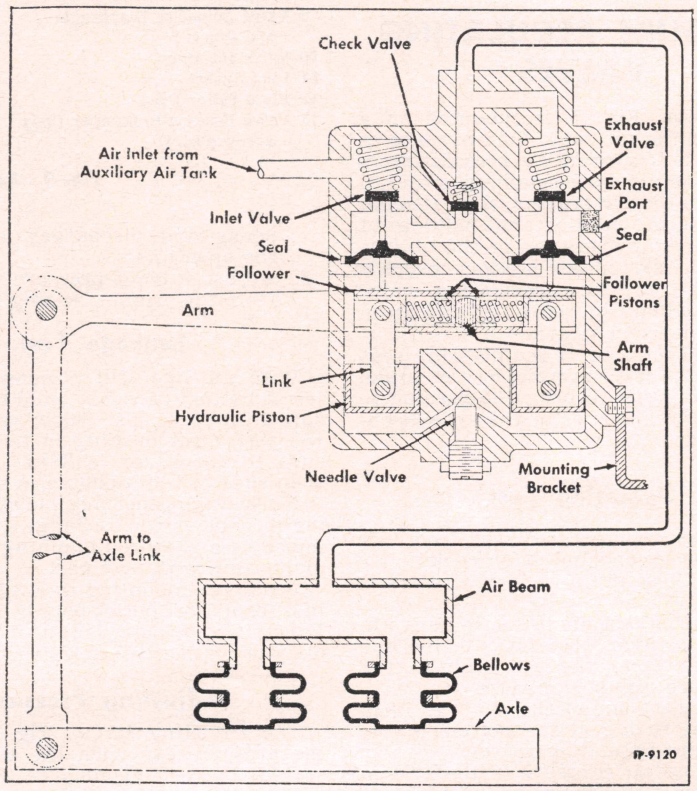

Fig. 8 Schematic diagram of height control valve

control valves. Any foreign matter carried by air being exhausted from air chamber is trapped before air enters height control valve. Air filters should be removed and serviced at regular intervals. Clogged air strainers will retard flow of compressed air into and out of suspension system.

Removal

1. Securely support frame with wood blocks. Place 2¾″ blocks between rear axle bumpers and frame side rails. Place 7″ blocks between front axle bellows supports and top plates.
2. Exhaust compressed air from air tank by opening drain cock.
3. Disconnect height control valve link at valve and pull down arm to exhaust compressed air from bellows and air chamber. Do not disturb link adjustment.
4. Disconnect air lines from elbows or connectors at filter assemblies. Unscrew air filters from control valve bodies or from elbow in control valve body. Remove connector bodies or elbows from air filters.

Assemble and Install

After cleaning all parts, blow dry with compressed air. Blow air through bronze filter from inside of cone. Discard old grommet and use a new one when assembling. Coat new grommet with Lubriplate or equivalent. Use Permatex No. 3 sparingly on all male threads, *but not on the first two threads*. After installation is completed, build up pressure in the system and check for air leaks.

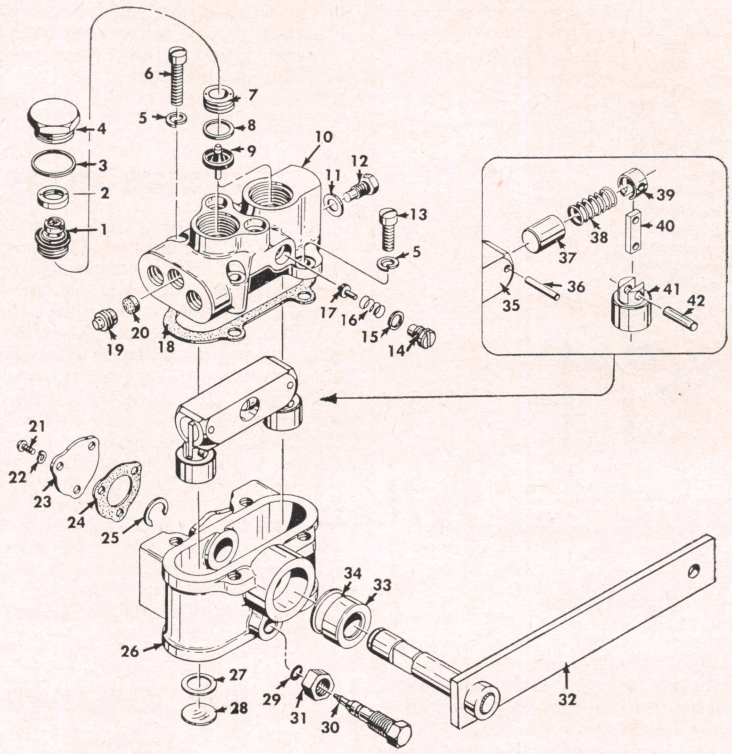

1 Control Valve Assembly
2 Control Valve Lock Nut
3 Cover Nut Gasket
4 Control Valve Cover Nut
5 Lock Washer
6 Valve Housing to Damper Body Screw (Long)
7 Diaphragm Retaining Lock Nut
8 Diaphragm Retaining Washer
9 Valve Actuating Diaphragm and Plunger
10 Valve Housing
11 Plug Gasket
12 Fluid Filler Plug
13 Valve Housing to Damper Body Screw (Short)
14 Check Valve Cover Nut
15 Cover Nut Gasket
16 Check Valve Spring
17 Check Valve
18 Valve Housing to Damper Body Gasket
19 Exhaust Silencer Retainer
20 Exhaust Silencer
21 End Cover Screw
22 Lock Washer
23 Shaft End Cover
24 End Cover Gasket
25 Shaft Retaining Ring
26 Damper Body
27 Expansion Plug Gasket
28 Expansion Plug
29 Needle Valve "O" Ring Seal
30 Needle Valve
31 Needle Valve Lock Nut
32 Actuating Arm and Shaft
33 Shaft Seal
34 Seal Gasket
35 Cam Follower Beam
36 Beam to Link Pivot Pin
37 Cam Follower Tappet
38 Tappet Spring
39 Tappet Spring Retainer
40 Beam to Piston Link
41 Damper Piston
42 Link to Piston Pivot Pin

Fig. 9 Exploded view of height control valve

PRESSURE REGULATING VALVES

This valve, Fig. 7, is mounted on a bracket at the air tank. One purpose of this valve is to prevent air pressure from entering the air suspension system until pressure in the air brake system reaches 65 psi. This provides a rapid build-up of air pressure for operation of the brakes. When brake system air pressure exceeds 65 psi, the pressure regulating valve opens and allows pressure to build up in the air suspension system.

A second purpose of the pressure regulating valve is to prevent loss of brake system air pressure below 65 psi due to leakage in air lines or in the air suspension system.

Operating Test

1. Exhaust compressed air from air system by opening drain cock at air tank. Close drain cock when tank is empty.
2. Connect a test air pressure gauge in brake system, preferably in the line leading from the air tank to the pressure regulating valve.
3. Disconnect one of the air lines from the tee fitting at the bottom of the pressure regulating valve.
4. Build up air pressure in the system and note the pressure on the test gauge at the same time the valve opens and discharges air through the open line.
5. Adjust valve if pressure varies 5 psi from the original setting (65 psi).

Leakage Test

With air line still disconnected from tee at bottom of valve, build up air pressure to a point just below valve setting (65 psi). Coat opening in tee with soap suds to check for leakage. Also apply soap suds to vent opening in valve cover.

No leakage is permissible at vent opening in valve cover. Leakage at this point indicates a ruptured diaphragm. Replace diaphragm with new part.

Leakage amounting to a 3-inch bubble in 3 seconds at outlet port is permissible. Excessive leakage is an indication of dirty or worn valve or valve seat.

Adjusting Pressure

The adjusting screw, Fig. 7, controls the pressure at which the valve is unseated. The setting may be increased or decreasd by turning the screw after loosening the lock nut.

HEIGHT CONTROL VALVE

Before disconnecting any height control valve air lines, securely support the frame. Place blocks between the bellows supports and top plates at the front axle and between the axle bumpers and frame at the rear axle. Exhaust compressed air from the air supply system by opening the drain cock at the air tank. After the above precautions have been taken, remove any valve as follows:

Removal

Disconnect the valve link from the valve arm. Pull the arm downward to release compressed air from the bellows and air chamber (front) or air beam (rear). Disconnect air lines at valve. Then unfasten and remove valve. Remove air filters and elbows from valve for installation on the replacement unit.

Installation

Before installing a height control valve, see that all air line fittings are

clean and undamaged. Replace connector rubber sleeves if damaged. Absolute cleanliness is essential when installing height control valves. Dirt and thread sealing compound must be kept out of valves. Even minute particles of foreign matter may become lodged on check valve or control valves seats and seriously affect operation of the suspension system.

When installing a valve, apply Permatex No. 3 on the male threads of fittings, *but not on the first two threads.* After the valve is installed, build up pressure in the system and test for leaks with soapy water.

Valve Service

Height control valves, Figs. 8 and 9, meter air into and out of the air suspension system. These valves must be precision built and accurately calibrated. Parts must be carefully handled and assembled and valves must be accurately adjusted to insure proper operation. Special tools must be used. Improper tools may break off chips that could lodge between valves and seats. Chips, dirt or other foreign matter are most generally the cause of improper valve operation. It is strongly recommended, therefore, that faulty valves be exchanged for new or rebuilt units.

Front End & Steering Gear Section

TORSION BAR SUSPENSION

Series 1000 Thru 3000

As shown in Fig. 1, the front end of each torsion bar is supported by a steel tube in the lower control arm. The hexagon end of the torsion bar engages a hexagon section at the center of the tube. The rear end of the torsion bar is supported in an adjustable anchor connected to a special crossmember. Shims used between control arm shaft spacers and frame bracket provide for adjustment of caster and camber.

Series 3500 Thru 5000

As shown in Fig. 2, the front end of each torsion bar is supported in the upper control arm. The hexagon end of the torsion bar engages a hexagon section at the center of the control arm. The rear end of each torsion bar is supported in a fixed bracket attached to the frame side rail. Shims between brackets and frame provide for camber adjustment. Notches in the lower control arm shaft and in the plate welded to the crossmember provide adjustment for caster.

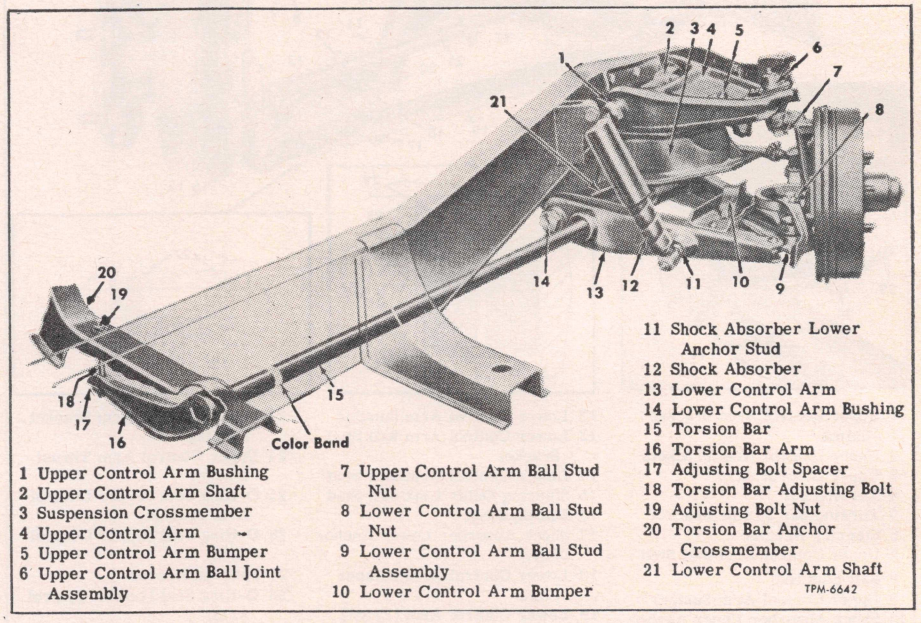

Fig. 1 Torsion bar suspension. Series 1000 thru 3000

VEHICLE CURB HEIGHT, ADJUST

Vehicle curb height should be checked and corrected if necessary to obtain the dimensions shown in Fig. 3 before making caster and camber adjustments. This measurement is taken from the bottom edge of the crossmember to top outer flange of lower bumper bracket at centerline of spindle.

On Series 1000 thru 3000, curb height adjustment may be made by adjusting the torsion bar anchor bolt.

On Series 3500 thru 5000, no adjustment is provided, as specified curb height will be obtained by installation of the proper torsion bar.

CASTER & CAMBER, ADJUST

Series 1000 Thru 3000

Caster and camber adjustments are made by means of shims between upper control arm spacer and the bracket attached to the frame. Shims may be changed at either front or rear bolt to change caster or at both points equally to change camber.

To enable more accurate settings, adjustments are based on a .0299″ shim. It is advisable to use .0598″ or .1196″ of shimming where possible to reduce the number of shims that have to be handled. The shim pack should not exceed ⅝″ (twenty-one .0299″ shims).

The total difference in shims between front and rear bolts should not exceed $\frac{21}{64}$″ (eleven .0299″ shims).

For caster changes, one .0299″ shim added to rear bolt changes caster a minus 24′ and camber a minus 1′. One .0299″ shim removed from rear bolt changes caster a plus 24′ and camber a minus 2′.

For camber changes, one .0299″ shim added or removed from both bolts changes camber plus or minus 10′ 38″. To adjust, proceed as follows:

1. Check and adjust curb height of vehicle.
2. Determine present caster and camber setting of one wheel.
3. Add or remove shims as suggested above.
4. After shims have been changed, check result.
5. Repeat on opposite wheel.

Series 3500 Thru 5000

Caster Adjustment

1. Check caster to determine amount of shim changes required.
2. Mark location of control arm shaft with reference to notched attaching plate, Fig. 2 (inset).
3. Loosen four shaft-to-crossmember bolts to free shaft from notches in attaching plates.
4. Move shaft rearward to decrease caster or forward to increase caster. Moving shaft one notch changes caster approximately ½°.
5. Tighten bolts and recheck adjustment.

Camber Adjustment

1. Check camber to determine amount of change required.
2. Remove two upper bolts and nuts

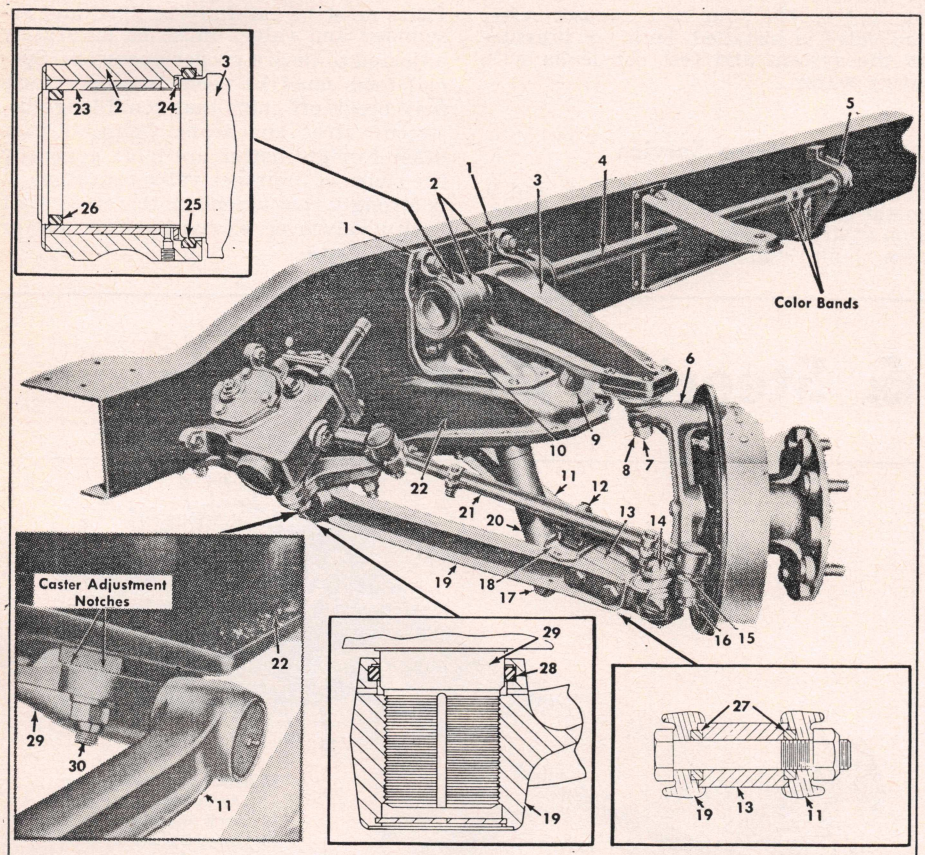

1 Upper Control Arm Bracket Shims
2 Upper Control Arm Brackets
3 Upper Control Arm
4 Torsion Bar
5 Torsion Bar Frame Bracket
6 Steering Knuckle
7 Upper Control Arm Ball Stud
8 Ball Stud Nut
9 Upper Control Arm Bumper
10 Shock Absorber Upper Anchor Pin
11 Lower Control Arm (Rear)
12 Lower Control Arm Bumper
13 Lower Control Arm Ball Stud Bracket
14 Lower Control Arm Ball Stud
15 Steering Outer Link Ball Stud
16 Ball Stud Nut
17 Shock Absorber Lower Anchor Pin
18 Lower Control Arm Bumper Plate
19 Lower Control Arm (Front)
20 Shock Absorber
21 Steering Outer Link
22 Suspension Crossmember
23 Upper Control Arm Bracket Bushing
24 Upper Control Arm Thrust Washer
25 O-Ring Seal (Upper Control Arm Bracket)
26 O-Ring Seal (Upper Control Arm)
27 Spacing Sleeves
28 O-Ring Seal (Lower Control Arm)
29 Lower Control Arm Shaft
30 Lower Control Arm Shaft Bolt

Fig. 2 Torsion bar suspension. Series 3500 thru 5000

attaching control arm brackets to frame and loosen two lower nuts.
3. From inside frame, remove and discard (if present) two countersunk clutch head screws at each bracket.
4. Lift vehicle at front crossmember until control arm bracket can be pried away from support.
5. Insert or remove shim at both bolts equally as required. The addition of a shim at both bolts increases camber about ½°.

TOE-IN, ADJUST

All Series

Toe-in is adjusted by loosening the clamp bolts at each end of steering outer links and turning each link to decrease or increase its length as necessary to obtain correct toe-in. Tighten clamp bolts securely after adjustment is made.

TORSION BARS, REPLACE

Torsion bars for different load ratings and for various truck models are identified by colored bands and by overall length. The right-hand bars have one color band and left-hand bars have two color bands. Color bands are located near rear end of bars and also serve to identify front and rear ends. It is imperative that both torsion bars on a vehicle have the same colored markings. Exercise caution in handling torsion bars to prevent nicks or scratches, since stress concentrations and corrosion can lead to failure of the bar in operation.

Removal, 1000 Thru 3000

1. Referring to Fig. 1, remove upper control arm bumper.
2. Remove shock absorber lower anchor stud.
3. Raise vehicle with wheel suspended and support frame with upper control arm resting on crossmember.
4. Unscrew nut on adjusting bolt to unwind torsion bar, then remove torsion bar arm from rear end of torsion bar.
5. Pull torsion bar rearward out of lower control arm tube and remove from vehicle.

Installation, 1000 Thru 3000

1. Front end of frame must be blocked up with upper control arm resting on crossmember.
2. Install front end of torsion bar into rear side of torsion bar tube in lower control arm. Slide bar forward until it stops against dimple in tube. This locates fore and aft position of bar.
3. Place spacer on torsion bar adjusting bolt, insert bolt through torsion bar anchor crossmember and start nut on bolt. Thread nut on bolt until bolt engages about half the threads in nut.
4. Place torsion bar arm on rear end of bar with hook on inner end of arm engaging adjusting bolt; spacer must be below arm. Position arm on torsion bar so rear face of arm is flush with rear end of bar within plus or minus $\frac{3}{32}$"; this is to prevent failure of bar due to stress developing if front corners of hex ride on edges of hex on bar. Partially tighten nut on adjusting bolt.
5. Remove blocking from under frame and lower vehicle to floor.
6. Secure shock absorber lower anchor stud.
7. Install upper control arm bumper.
8. Tighten nut on torsion bar adjusting bolt on each side until vehicle assumes nominal curb height shown in Fig. 3.
9. Measure distance from outer ends of front bumper to floor. Distance at both ends must be equal within ¼".
10. Check and if necessary adjust wheel alignment.

Removal, 3500 Thru 5000

1. Referring to Fig. 2, remove upper control arm bumper.
2. Remove shock absorber lower anchor pin.
3. Remove outer link ball stud from steering knuckle arm.
4. Jack up vehicle with wheels suspended until control arm rests on crossmember to remove load from torsion bar. Place jack under frame or crossmember and block vehicle securely after raising.
5. Using a long, thin punch, drive torsion bar lock pin frame bracket and discard pin, using a new one upon reassembly.
6. On long wheelbase models having sufficient distance between torsion bar frame bracket and rear spring frame bracket, move torsion bar rearward and remove through frame bracket.
7. On short wheelbase vehicles, move torsion bar rearward until front end is clear of upper control arm. Place blocking under lower control arm and tire, and have an assistant hold wheel to prevent it from tipping out-

ward when upper control arm is disconnected from frame. Unfasten upper control arm brackets from frame, noting number of shims under each bracket so the same shims can be installed on reassembly. Lift upper control arm and brackets to permit moving torsion bar forward.

8. Move bar forward until rear end is clear of frame bracket, then manipulate bar as necessary to remove vehicle.

Installation, 3500 Thru 5000

1. On long wheelbase vehicles, insert front end of torsion bar through frame bracket from rear side, then move bar forward. Guide front end of bar through upper control arm as rear end engages frame bracket. Lock pin notch in hex portion of rear end of bar must index with lock pin hole in frame bracket. Drive new pin into hole until flush with top of bracket.
2. On short wheelbase models, lift upper control arm and bracket assembly to permit inserting rear end of torsion bar through frame bracket. Move bar rearward until front end will clear upper control arm rear bracket. Attach upper control arm brackets to frame, being sure to use the same shims that were removed under each bracket. Tighten nuts on control arm bracket bolts. Remove blocking from under lower control arm and tire. Align lock pin notch in bar with hole in frame bracket, then move bar forward, guiding front end into upper control arm. Drive new lock pin into hole until flush with top of bracket.
3. Remove blocking and lower vehicle to floor.
4. Install upper control arm bumper and shock absorber lower anchor pin.
5. Connect steering outer link ball stud.
6. Check wheel alignment.

FRONT SUSPENSION SERVICE 1000 THRU 3000

Lower Ball Joint

1. To check the lower ball joint for wear, support weight of vehicle on tires.
2. Using outside micrometer or caliper, measure distance from bottom of lube fitting at bottom of ball joint to top of ball stud and record the dimension. Repeat at lower ball joint at opposite side of vehicle.
   Support vehicle weight at outer end of each lower control arm so that wheels are clear of floor; then repeat measurement as outlined above.
3. If the difference in loaded and unloaded dimensions on either side is greater than $\frac{3}{32}$", the joint is excessively worn and both lower ball joints should be replaced.
4. If the above measurements do not indicate any reason for ball joint replacement, test the torque tightness of the stud nut at each side of the vehicle as follows:
5. Clean dirt from area and check for looseness of stud in steering knuckle.
6. If looseness is not evident, remove cotter pin and mark stud and nut with a punch to identify their relative positions.
7. Loosen stud nut, then retighten to original position and observe torque reading. If less than 45 ft lbs torque is required to return nut to its original position, stud was probably loose in steering knuckle and replacement of ball joint is recommended.
8. If replacement of ball joint is required, remove control arm and replace joint, tightening stud nut to a torque of 175-200 ft lbs.

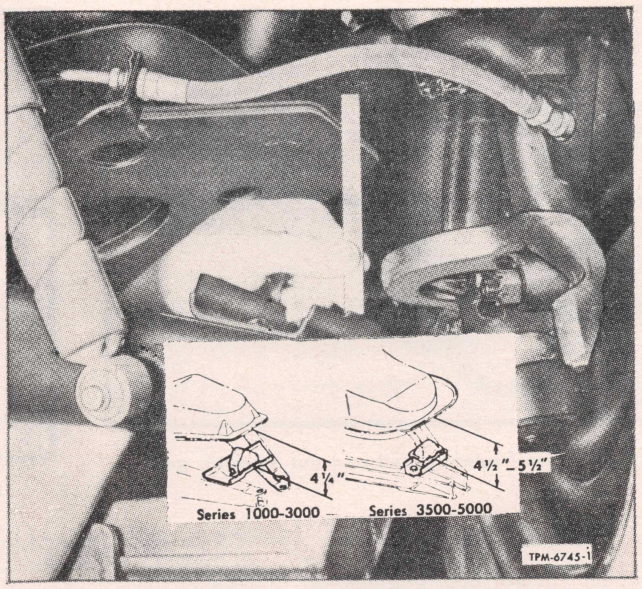

Fig. 3 Measuring vehicle curb height

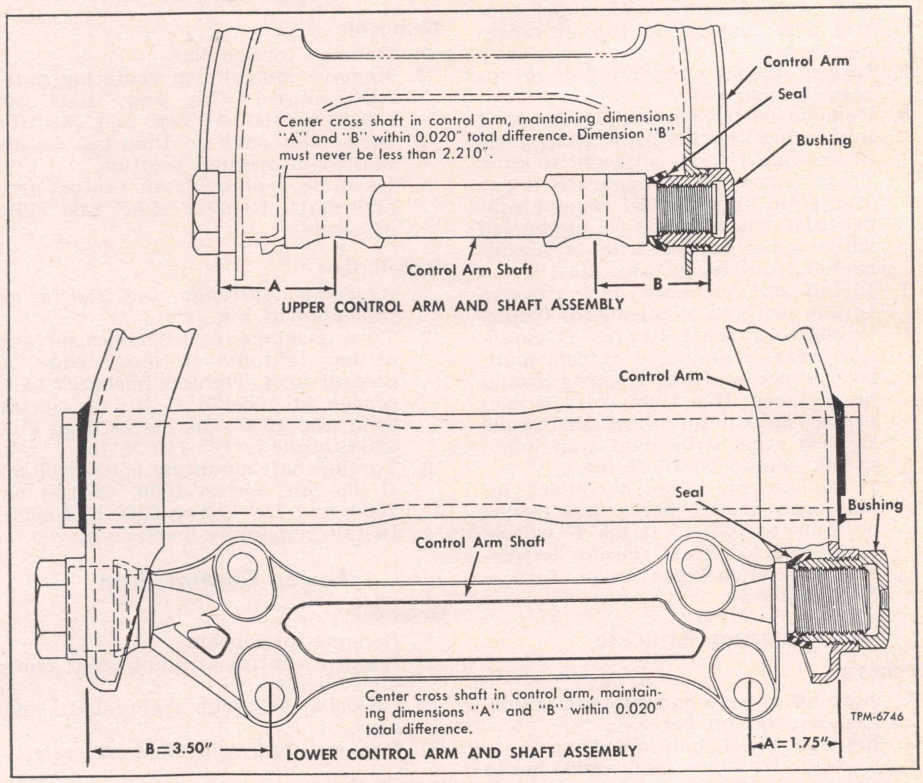

Fig. 4 Position of control arm shafts. 1960 Series 1000 thru 3000

Upper Ball Joint

1. The ball joint can be checked for wear by checking the torque re-

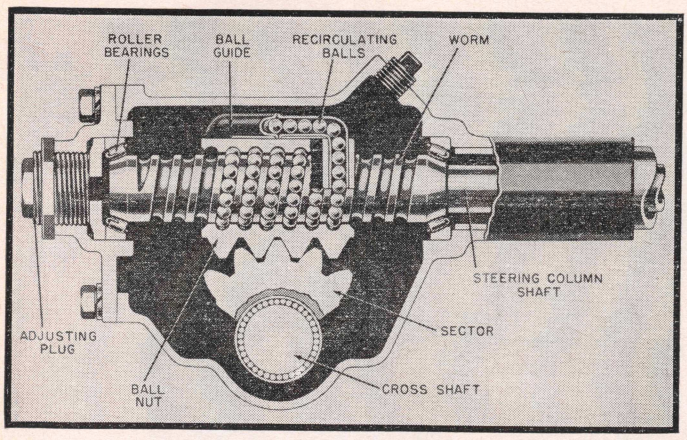

Fig. 5 Saginaw recirculating ball and nut steering gear

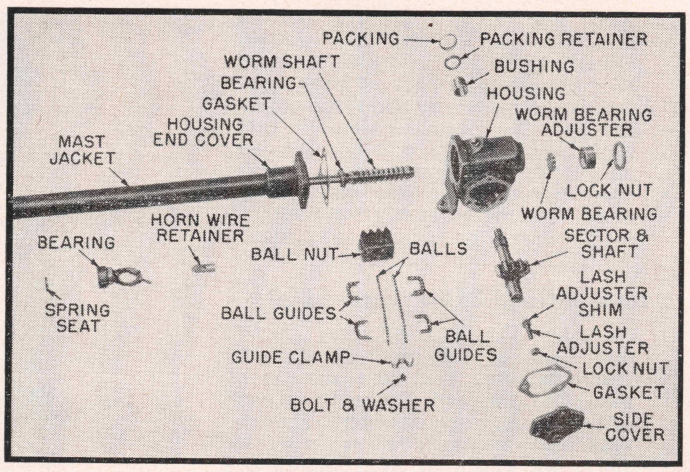

Fig. 6 Layout of a Saginaw ball and nut steering gear

quired to rotate the ball stud as follows:

2. Remove upper control arm bumper.
3. Remove shock absorber lower anchor stud.
4. Raise vehicle with wheel suspended and support frame with upper control arm resting on top of crossmember.
5. Loosen nut on adjusting bolt to unwind torsion bar.
6. Remove cotter pin and loosen stud in steering knuckle by striking sides of knuckle at flats adjacent to stud. Then remove nut, separate upper stud from knuckle and remove rubber seal (wheel must be supported while upper control arm is disconnected from top of knuckle).
7. Install nut on stud and measure torque required to turn stud. Torque should be at least 2 ft lbs. If excessive wear is indicated at this joint, both upper and lower joints should be replaced. If a tight joint is suspected, maximum allowable torque to turn stud, with joint well lubricated, should be 15 ft lbs.
8. If replacement is not necessary, install and attach parts and torque stud nut to 100-135 ft lbs. *It will be necessary to adjust tension on torsion bar as outlined under Torsion Bar, Replace.*

Steering Knuckle

Removal

1. Jack up vehicle and support frame.
2. Remove torsion bar.
3. Remove wheel, hub and drum.
4. Remove backing plate and brake shoes.
5. Remove nut from upper ball stud.
6. Remove nut from lower ball stud.
7. Drive lower ball stud out of steering knuckle and remove knuckle from upper ball stud.

Installation

1. Install new seal over upper and lower ball studs.
2. Position steering knuckle over upper ball stud and install nut.
3. Lift lower control arm, guiding ball stud through lower end of knuckle and install nut on stud.
4. Tighten upper stud nut to a torque of 175-200 ft lbs and lower stud nut to 100-135 ft lbs and install cotter pins.
5. Install remaining parts removed.

Upper Control Arm

Removal

1. Remove torsion bar.
2. Remove control arm mounting nuts.
3. Lift control arm and shaft off mounting bolts. Tag and identify each shim pack so they can be installed in original position.
4. Unscrew bushing from control arm and shaft. Remove shaft and slide off seals.

Installation

1. Assemble bushings and shafts as indicated in Fig. 4.
2. Turn bushings in until inner surface of hex bottoms on outer edge of control arm. Tighten bushings to a torque of 105-120 ft lbs on Series 1000 and 1500. On Series 2500 and 3000 torque is 125-140 ft. lbs.
3. Torque shaft mounting bolts to 60-80 ft lbs on Series 1000, 90-120 on 1500, and 130-170 on 2500 and 3000.
4. Install remaining parts removed.

Lower Control Arm

Removal

1. Remove torsion bar.
2. Remove control arm and shaft from crossmember.
3. Unscrew bushings from shaft and arm.
4. Remove shaft and slide off seals.

Installation

1. Install new seal over each end of control arm.
2. Install shaft in arm. Lubricate inner threads of bushings and thread bushings onto shaft and into control arm. Turn shaft until it is centered in control arm as indicated in Fig. 4. Then turn bushings in until inner surface of hex bottoms on outer edge of arm.
3. Tighten bushings to a torque of 125-140 on Series 1000 and 1500. On 2500 and 3000 torque is 145-160 ft lbs. Check shaft for free rotation.
4. Install control arm and shaft and tighten mounting bolts to a torque of 90-115 ft lbs on 1000 and 1500 and 145-185 on 2500 and 3000.
5. Install remaining parts removed.

FRONT SUSPENSION SERVICE 3500 THRU 5000

Upper Ball Joint

Check the condition of upper ball joints in the same manner outlined for *lower* ball joint on 1000-3000 models.

Lower Ball Joint

Check condition of lower ball joint in the same manner outlined for the *upper* ball joint on 1000-3000 models. However, the torque required to turn the stud should be at least 5 ft lbs. And if a tight joint is suspected, maximum allowable torque, with joint well lubricated, should be 20 ft lbs.

Steering Knuckle

1. Remove upper control arm bumper plate and bumper.
2. Remove shock absorber lower anchor pin.
3. Remove tie rod ball stud from steering knuckle.
4. Raise vehicle with wheels suspended until upper control arm rests on top of crossmember to remove load from torsion bar. Place jack under frame or crossmember and block vehicle securely after raising.
5. Remove wheel, hub and drum.
6. Remove brake shoes. Disconnect flexible brake lines at brake backing plate or at brake chamber (air brakes). If equipped with air brakes, remove brake chamber and slack adjuster. Remove backing plate from knuckle.
7. Remove nuts from upper and lower ball studs.
8. Drive lower ball stud out of knuckle and remove knuckle from upper ball stud.
9. Installation is accomplished in the reverse order of removal.

Lower Control Arm

1. Perform Steps 1 to 4 under *Steering Knuckle.*
2. Mark lower control arm snaft and notched plate welded to crossmember so shaft can be installed exactly in the same position.
3. Unfasten and remove lower control arm and shaft from crossmember.
4. Remove lower control arm bumper plate and bumper.
5. Remove lower ball stud and bracket and spacing sleeves from control arm.
6. Unscrew control arms from shaft and remove O-ring seal from groove in inner side of each arm.
7. Installation is accomplished in the reverse order of removal. However, thread the control arms on the shaft until the threads bottom, and back off each arm a minimum of ⅛ turn; then back off an additional amount as necessary for both arms to point in the same direction.

Upper Control Arm

1. Perform Steps 1 to 4 under *Steering Knuckle.*
2. Drive torsion bar lock pin out of frame bracket, using a long, thin punch.
3. Move torsion bar rearward until front end is clear of upper control arm rear bracket.
4. Remove upper control arm and brackets, noting the number of shims used under each bracket so the same shims can be installed at assembly.
5. Slide brackets off control arm.
6. Remove O-ring seals from grooves in outer ends of control arm and inside brackets, and remove thrust washers from bores of brackets.
7. Installation is accomplished in reverse order of removal.

SAGINAW BALL & NUT STEERING GEAR

1952-63

The steering gear, Figs. 5 and 6, is the recirculating ball type. The principal working arrangement consists of a "ball nut" connected to the steering worm and in mesh with the sector gear. Precision finished helical grooves inside the ball nut match helical grooves in the worm, and it is in these grooves that ball bearings roll around as the steering wheel is turned.

There are two complete ball circuits within the ball nut. To keep the balls from running out of the end of either circuit, the nut is equipped with two tubular ball guides, each of which deflects the balls away from their helical path at one end of their travel, guides them diagonally across the back of the nut and returns them to their helical path between the ball nut and the worm at the other end of their travel.

The balls constitute a thread between the worm and ball nut so that when the worm is turned, the nut moves along the worm as with an ordinary screw thread.

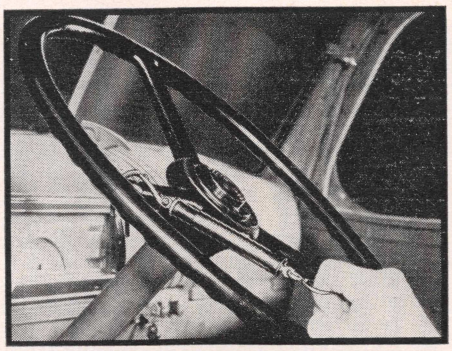

Fig. 7 Checking load on steering gear with spring scale at steering wheel rim

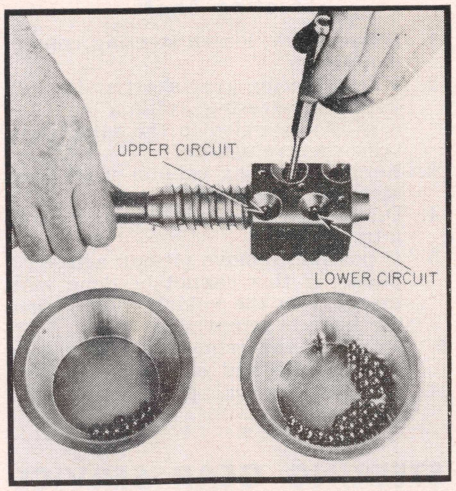

Fig. 8 Filling ball circuits in nut

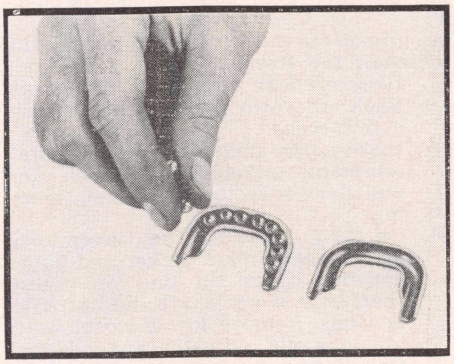

Fig. 9 Filling ball guides

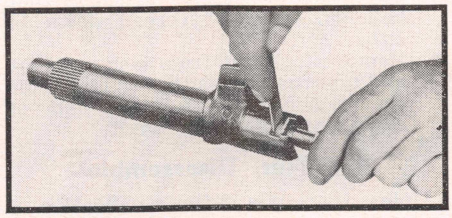

Fig. 10 Checking lash adjuster end clearance

STEERING GEAR ADJUSTMENTS

1952-59

There are only two adjustments to be made on this gear and the following procedure must be made step-by-step in the order given.

1. Disconnect drag link from pitman arm.
2. Loosen the sector shaft lock nut and turn the adjusting screw a few turns counter-clockwise, Fig. 6. This removes from the worm bearings the load imposed by close meshing of rack and sector teeth. Turn steering gear gently in one direction until stopped by gear, then turn it back one turn.
3. With a spring scale, Fig. 7, measure the pull at the rim of the wheel which is required to keep the wheel in motion. This should be between 1 and 1½ lbs. up to model 470 and 1½ to 2 lbs. on larger models. If the pull necessary to move the wheel does not lie between these limits, adjustment of worm bearings is necessary.
4. To adjust worm bearings. loosen the worm shaft lock nut and turn the worm bearing thrust screw until there is no perceptible end play in worm. Check pull at wheel rim, readjusting if necessary to obtain proper pull. Tighten lock nut and recheck pull as it must be within proper limits after lock nut is tightened.
5. After proper adjustment of worm is obtained and all mounting bolts securely tightened, adjust cross shaft lash adjuster as follows:
6. First turn steering wheel gently from one stop to the other, carefully counting total number of turns. Then turn wheel back half way to center position. Mark wheel at top or bottom center with a piece of tape.
7. Turn lash adjuster clockwise to take out all lash in gear teeth and tighten lock nut.
8. Check pull at wheel rim with spring scale as before, taking highest reading on scale as wheel is turned through center position. This should be between 2 and 2½ lbs. on models up to 470 and 2½ to 3 lbs. on larger models.
9. Readjust if necessary to obtain proper pull. Tighten lock nut and recheck pull as it must be within proper limits after lock nut is tightened.
10. Connect drag link to pitman arm.

1960-63 With One Piece Steering Shaft

To adjust worm bearings, loosen lock nut and turn worm bearing adjuster screw clockwise until all lash is removed. Using spring scale hooked to steering wheel rim, check amount of pull required to keep wheel moving. Reading on scale should be 1½ to 2 lbs. Turn adjuster screw as necessary to obtain correct adjustment.

To adjust pitman shaft lash, place steering wheel in its exact straight ahead position. Turn lash adjuster screw

clockwise to remove all lash. When all lash has been removed tighten lash adjuster lock nut to 25-35 ft lbs. Greatest pull when wheel is pulled through center position is 2¾ to 3¼ lbs.

1960-63 With Two Piece Steering Shaft

Proper adjustment of worm bearings is obtained by adding or removing shims between steering gear housing and end or top cover. Drain lube from gear housing. Remove top or end cover and shim pack. Discard one thin shim and reinstall cover with remaining shims. Check steering wheel rim pull with spring scale attached to rim. Reading on scale should be 1½ to 2 lbs. Add or remove shims as required to obtain proper adjustment.

Pitman shaft adjustment is accomplished in the same manner outlined above for P1500 models.

STEERING GEAR, REPLACE

1952-59 (Except C.O.E.)

1. Disconnect horn wire and remove wire retainer from steering mast jacket.
2. Remove horn button and steering wheel.
3. Remove seat cushion except on Forward Control models.
4. Unfasten mast jacket from instrument panel.
5. On ½ and ¾ ton, disconnect gear shift upper control shaft support from mast jacket. Separate upper control shaft from lower shaft by removing lower bolt from shaft clamp.
6. Unfasten and slide toe board grommet and seal up on mast jacket and remove toe board plate.
7. On Forward Control models, hoist front end of vehicle and remove mast jacket opening cover located underneath vehicle.
8. On ½ and ¾ ton, unfasten gearshift control housing from mast jacket.
9. Unfasten gear housing from frame.
10. On Forward Control models, gear can now be moved forward, down and out of vehicle.
11. On all other models, unfasten and move left fender skirt out of the way.
12. Slide steering gear slightly upward toward toe board, then rotate until attaching flange is up. Raise slightly and lift gear out over fender.
13. Reverse the foregoing procedure to install the gear.

1952-59 C.O.E.

1. Remove steering wheel and disconnect dash mounting bracket.
2. Remove left hand floor pan and steering column grommet.
3. Disconnect horn wire.
4. Remove signal switch bowl.
5. Remove fender skirt.
6. Remove pitman arm.
7. Unfasten gear from frame.
8. Move gear back to clear radiator grill. Then drop gear down through fender skirt opening, pulling steering column through opening in floor.
9. Reverse above procedure to install gear.

1960-63 Models With One Piece Steering Shaft

1. Remove steering wheel with puller.
2. Remove spring and insulator from top of steering shaft.
3. Disconnect all control linkage, horn parts and mounting brackets attached to steering column.
4. Disconnect steering linkage from pitman arm; then remove pitman arm with puller. On some models it may be impossible to remove the pitman arm until steering gear is removed from vehicle.
5. Unfasten steering gear housing from frame and remove.
6. Reverse removal procedure to install.

1960-63 With Two Piece Steering Shaft

1. If necessary, loosen steering column mountings.
2. Mark steering gear shaft and clamp yoke on steering column so they can be assembled in the same position when reinstalled.
3. Remove steering column shaft from steering gear shaft.
4. Disconnect steering linkage from pitman arm.
5. If possible remove pitman arm with puller. If this cannot be done with the gear in the vehicle, do it when the gear is removed.
6. Unfasten and remove steering gear from frame and out of vehicle.
7. Reverse removal procedure to install gear.

STEERING GEAR SERVICE

Disassemble

As with any ball or roller bearing unit, the steering gear parts must be kept free of dirt. Clean paper or cloth should be spread on the bench before starting to repair the steering gear.

1. Back off lash adjuster a few turns.
2. Back off worm bearing thrust screw a few turns.
3. Place a pan under assembly to catch lubricant, unfasten side cover and pull it with sector shaft from housing.
4. On ½, ¾, 1 and 1½ ton conventional models, slide mast jacket and upper housing cover up and off worm shaft. Lift worm shaft and nut from housing. Remove lower worm bearing lock nut adjuster and bearing.
5. On Forward Control and larger models, remove housing end cover and lower worm bearing. Draw worm shaft and nut from housing. Lay assembly flat on bench so that ball nut will not thread down to either end.
6. Remove lock nut from lash adjuster and unscrew lash adjuster from side cover. Slide lash adjuster out of slot in end of sector shaft.

Ball Nut, Disassemble

Unless there is a definite indication of binding or tightness when the ball nut is rotated on the worm, the ball nut need not be disassembled.

1. Remove screw (or screws) and clamp retaining ball guides in nut. Draw guides out of nut.
2. Turn nut upside down and rotate worm shaft back and forth until all balls have dropped out of nut into a clean pan. With all balls removed, pull nut endwise off shaft.

Inspection

With all parts cleaned and dry, use a magnifying glass to inspect roller bearings, cones, worm and nut grooves, and the surface of all balls for indentations. Also check for any signs of chipping or breakdown of surfaces.

Inspect sector shaft for wear and check fit of shaft in housing bushing.

Inspect fit of pilot on end of sector shaft in its bushing in side cover. If this bushing is worn, a new side cover and bushing assembly should be installed as it is impractical to replace this bushing in the field.

Check ball guides for any damage at the ends where they deflect or pick the balls from their helical path. Any damaged guides should be replaced.

Ball Nut, Assemble

1. Place worm shaft flat on bench and slip nut over worm. Align grooves in worm and nut by sighting through ball guide holes.
2. Evenly divide the number of balls and place them in separate pans, Fig. 8.
3. Drop the balls from one pan into one of the guide holes while turning the worm gradually away from that hole. Continue until the ball circuit is full. In cases where the balls are stopped by the end of the worm, hold down those balls already dropped into the nut with the blunt end of a clean rod or punch, Fig. 8, and turn the worm in the reverse direction a few turns. It may be necessary to work the worm back and forth, holding the balls down first in one hole then the other to close up the spaces between the balls and fill the circuit completely and solidly.
4. Lay one half of the ball guide on the bench and fill the guide with balls, Fig. 9. Close this half of guide with the other half. Hold the two halves together and plug each open end with vaseline so balls will not drop out while installing guide.
5. Push guide in holes of nut. If the guide does not push all the way down easily, tap it lightly into place.
6. Fill second ball guide in same manner.
7. Assemble ball guide clamp to nut, being sure to use lock washers under clamp screws and tighten screws.
8. Check assembly by rotating nut on worm to see that it moves freely. If there is any "stickiness" in the motion of the nut, some slight damage to the ends of the ball guides may have been overlooked.

Steering Gear, Assemble

The threads of the adjuster cap, side cover bolts and lash adjuster should be coated with a suitable sealer such as

Permatex No. 2. The compound should not be applied to female threads, and extreme care should be exercised in applying this compound to the bearing adjuster cap, as the compound must be kept away from the bearing race.

1. On light duty conventional models, place worm shaft and nut into housing and place upper roller bearing over worm shaft. Place new end cover gasket over end of worm shaft, making sure horn wire is through opening in mast jacket and slide housing end cover with mast jacket over worm shaft and assemble to housing. Install lower roller bearing, worm bearing adjuster and lock nut in lower end of housing.
2. On Forward Control, medium and heavy duty models, place upper worm bearing over worm shaft. Then, after making sure horn wire is through its opening in housing, place worm shaft and nut in housing. Back worm bearing adjuster out of housing end cover a few turns. Install lower roller bearing and assemble lower end cover to housing, using a new gasket.
3. On all models, assemble lash adjuster with shim in slot in end of sector shaft. Check end clearance which should not be greater than .002″, Fig. 10. Various thickness shims are available to obtain this clearance.
4. Start sector shaft pilot into bushing in side cover. Then, using screw driver through hole in cover turn lash adjuster to the left (counterclockwise) to pull pilot into its bushing as far as it will go.
5. Rotate worm shaft by hand until ball nut is in center of its travel, so that the center tooth of sector enters center tooth space of nut.
6. With new gasket in place, push side cover with sector shaft in place. After making sure there is some lash between rack and sector teeth, tighten side cover bolts.

INTERNATIONAL DIESEL ENGINES

INDEX OF SERVICE OPERATIONS

PAGE NO.

ENGINE

Camshaft and Bearings 763
Crankshaft Rear Seals 763
Cylinder Head 761
Description 756
Engine, Replace 761
Main Bearings 763
Oil Cooler 764
Oil Pump 764
Oil Pump Support 764
Pistons and Cylinders 763
Piston Pins 763
Piston Rings 763
Pistons and Rods, Assemble 763
Rocker Arms 762
Rod Bearings 763
Specifications 756
Timing Gear Cover 762
Timing Gears 762
Valves, Adjust 762
Valves, Grind 762
Valve Guides 762
Valve Lifters 762
Valves, Remove 762
Valve Seat Inserts 762
Valve Springs 762
Water Pump 764

FUEL SYSTEM

Adjustments, Pump on Engine 760
Electrical Shut-Off Device 760
Injection Pump 756
Injection Pump Operation 756
Injection Pump, Replace 760
Injection Pump Timing 760
Nozzle Testing 760
Venting Fuel System 760

TROUBLE SHOOTING

Engine Idles Poorly 759
Engine Smokes Black 759
Engine Smokes Blue 759
Engine Starts Hard 759
Engine Starts and Stops 759
Engine Won't Develop Full Power or Speed 759
Erratic Engine Operation 759
Fuel Delivered from Transfer Pump but not to Nozzles 758
Fuel Knock 760
Fuel Not Reaching Pump 758
Fuel Reaching Nozzles But Engine Won't Start 759

GENERAL SPECIFICATIONS

Engine Model	Bore & Stroke	Brake H.P. @ R.P.M.	Torque, Ft. Lbs. @ R.P.M.	Firing Order	Compression Pressure Cranking Speed	Idle Speed No Load	Governed Speed		Oil Pan Capacity Refill Quarts
							No Load R.P.M.	Full Load R.P.M.	
D-301	3.8125 x 4.390	110 @ 3000	230 @ 1600	153624	350–400	500–550	3250	3000	9

VALVE SPECIFICATIONS

Engine Model	Valve Lash		Valve Face Angle	Valve Stem Diameter	Valve Stem Clearance	Valve Guide Inside Diameter	Valve Springs			Valve Timing	
	Hot	Cold					Free Length	Test Length	Test Pressure Lbs.	Intake Opens BTDC	Exhaust Closes ATDC
D-301	.027	.030	45°	.3715–.3725	.0015–.004	.3740–.3755	$2\frac{7}{16}$	$1\frac{19}{32}$	150	12°	15°

PISTONS, PINS, RINGS, CRANKSHAFT & BEARINGS

Engine Model	Piston Clearance	Piston Pin Diameter	Ring End Gap①			Rod Bearings		Main Bearings			
			Compression		Oil	Shaft Diameter	Bearing Clearance	Shaft Diameter	Bearing Clearance	Thrust On Bear. No.	Shaft End Play
			Top	2nd							
D-301	.004–.0056	1.1248	.025	.018	.023	2.373–2.374	.0009–.0034	2.748–2.749	.0012–.0042	3	.005–.013

①—Fit rings in tapered bores for clearance listed in tightest portion of ring travel area.

ENGINE TIGHTENING SPECIFICATIONS★

★Torque specifications are for clean and lightly lubricated threads only. Dry or dirty threads produce increased friction which prevents accurate measurement of tightness.

Engine Model	Cyl. Head Ft. Lbs.	Exh. Man. Ft. Lbs.	Conn. Rod Ft. Lbs.	Main Bear. Cap. Ft. Lbs.	Flywheel to Crankshaft Ft. Lbs.	Crankshaft End Nut Ft. Lbs.	Camshaft End Nut Ft. Lbs.	Nozzle Body Bolts Ft. Lbs.	Nozzle Fitting Ft. Lbs.	Injection Pump Drive Shaft Nut Ft. Lbs.	Injection Pipe Connector Screw (Pump End) Ft. Lbs.
D-301	110–120	20–25	45–55	75–85	55–65	90–100	110–120	20–25	60–70	35–40	23–27

ENGINE DESCRIPTION

The D-301 engine is a six-cylinder in line, valve-in head, four cycle diesel. It is of conventional International design except that it uses a direct fuel injection system. The fuel system consists of the fuel lines, fuel filters, and injection pump, injection nozzles and lines, Figs. 1 to 4.

Fuel Injection Pump

The Roosa fuel injection pump, Fig. 5, is a single cylinder, opposed plunger, inlet metering, distributor type pump. The main components are the drive shaft, distributing rotor, transfer pump, pumping plungers, internal cam ring, hydraulic head, end plate, governor, solenoid shut-off, and speed advance mechanism.

The rotating members revolve around a common axis and are the drive shaft, distributor rotor (containing the plungers and governor) and the transfer pump.

The driving member is the drive shaft that engages the distributor rotor by means of a tang-in-slot that revolves the rotor in the hydraulic head. The drive end of the rotor has a diametric bore containing two opposed plungers. The opposite end of the rotor serves as the transfer pump rotor.

The speed advance mechanism provides for fuel injection at the most desirable time for various engine speeds.

Injection Pump Operation

Governor—The variable speed governor is mounted on the drive end of the distributor rotor. The action of the weights in their retainer is transmitted through a sleeve to the governor arm and through a linkage to the metering valve. The governed engine speed is the speed at which the force of the governor weights and the force of the governor spring is balanced on the governor arm. The pressure of the spring on the governor arm can be varied, thus providing variable governed engine speed. The light

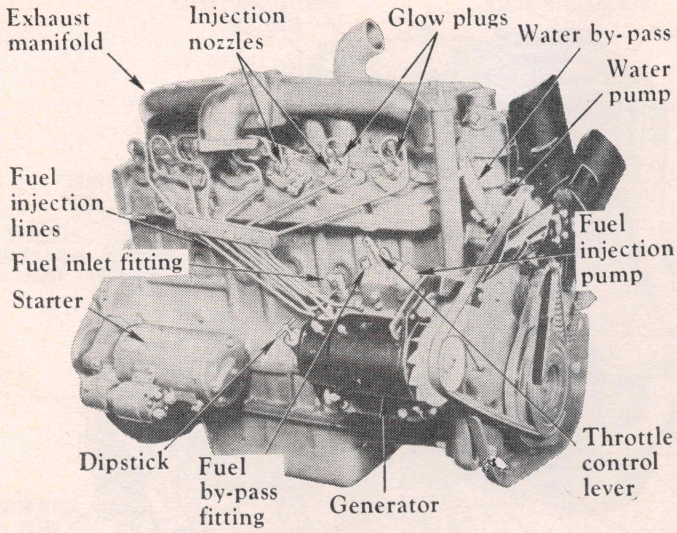

Fig. 1 Right front view of D-301 diesel engine

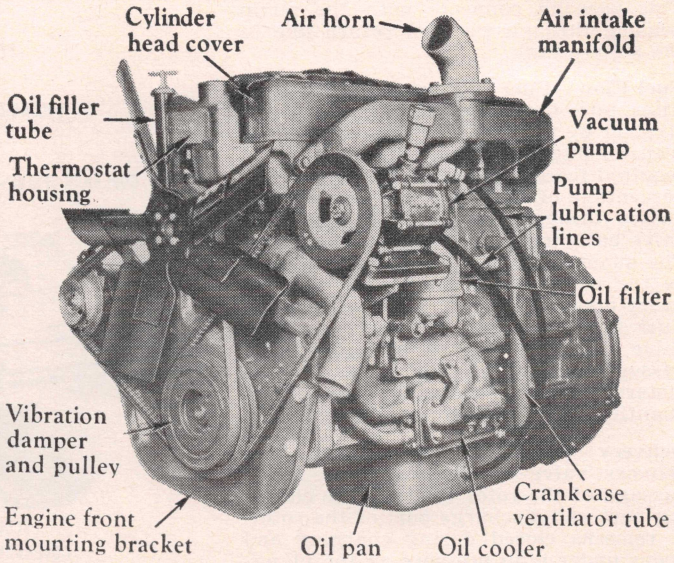

Fig. 2 Left front view of D-301 diesel engine

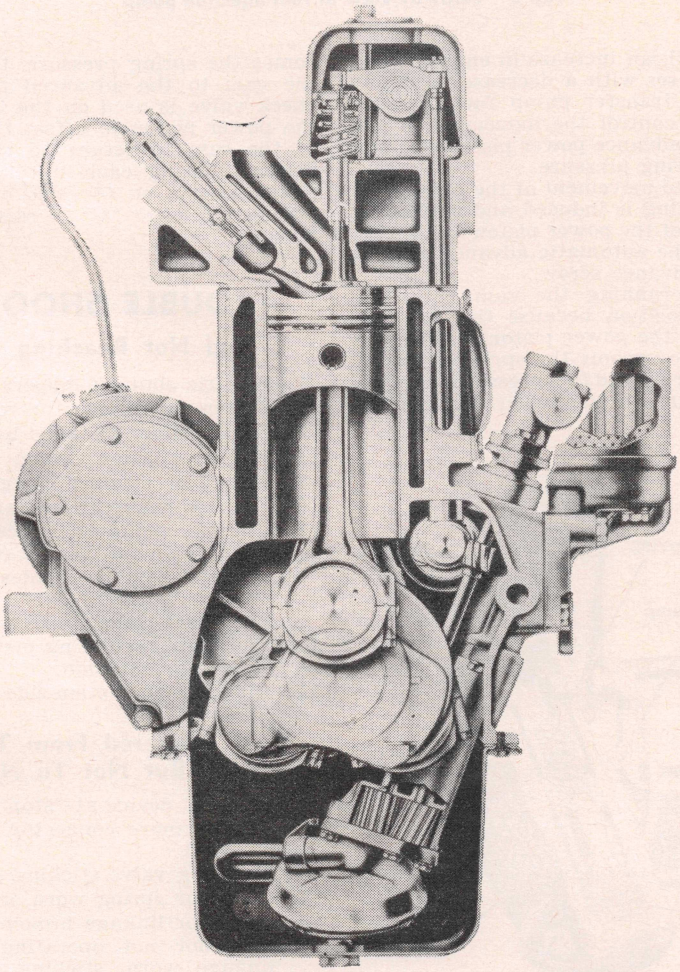

Fig. 3 Cross sectional view of D-301 diesel engine

idle spring provides sensitive governor action at low engine speeds. A governor linkage hook that is connected to the metering valve is actuated by the governor arm.

Rotor—The drive end of the rotor has a bore containing two plungers. The plungers are moved toward each other simultaneously through shoes and rollers actuated by a six-lobe internal cam ring. The shoe, which provides a large bearing surface for the roller, is carried in guide slots in the rotor.

The rotor shaft rotates with a very close fit in the hydraulic head. A passage through the center of the rotor shaft connects the pumping cylinder with one charging port and one discharge port. The hydraulic head in which the rotor shaft turns has six charging ports and six discharge ports.

Transfer Pump—A positive displacement, vane type fuel transfer pump is at the end of the rotor shaft. Fuel pressure developed by the fuel transfer pump is controlled by a pressure regulator valve in the pump end plate. A passage at the top of the transfer pump facilitates removal of air introduced in the system.

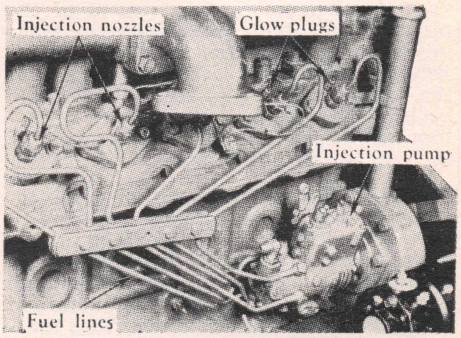

Fig. 4 Major components of diesel fuel system

This passage connects with the pump housing through the fuel return line to the supply tank.

Fuel Flow—Fuel is drawn from the final filter into the pump through the inlet strainer by the fuel transfer pump. The transfer pump capacity exceeds the fuel required for injection; therefore, a large percentage of fuel from the pump is by-passed through the pressure regulating valve back to the inlet side of the pump. The quantity of fuel by-passed increases as the pump speed increases. The delivery pressure also increases with speed. Fuel not by-passed by the regulating valve passes through a hydraulic head passage to the metering valve. Fuel is metered by the metering valve in a quantity determined by engine demand.

Delivery Valve—A displacement type delivery valve is located in the drive passage of the rotor between the charging port and discharge port of the rotor. It remains closed during charging and opens under high pressure as the plungers are forced together.

End Plate—The end plate has three basic functions: 1) to provide passage for fuel and to cover and absorb end thrust of the transfer pump; 2) to house the pressure regulator valve and, 3) to house the priming by-pass spring which permits fuel to by-pass the transfer pump during hand priming, Fig. 6.

Governed Speed (High Idle)—When the engine is operating at no load governed speed, the quantity of fuel delivered is controlled by governor action on the metering valve. Leaf spring adjustment has no effect under this condition.

Part Load and Full Load—As load is progressively applied, the governor action on the metering valve continues to control the quantity of fuel delivered until engine rpm drops to rated load speed. At this point the governor has opened the metering valve sufficiently for complete plunger charging. Any further movement of the metering valve does not increase the fuel delivery. The maximum amount of fuel that can be injected at any full load speed is controlled by the roller or leaf spring adjustment.

Overload—As the engine speed continues to drop from rated load, the charge of fuel is great enough to force the plungers outward far enough during each charging cycle to bring the roller shoes into contact with the leaf spring. This prevents further outward movement of the plungers and, therefore, limits the maximum amount of fuel that can be injected. From this it can be seen that the maximum amount of fuel that can be injected during any overload operation below peak torque is controlled by the leaf spring adjustment.

Speed Advance—The injection pump incorporates a speed advance mechanism that provides for fuel injection at the most desirable time for various engine speeds. In addition it allows the engine to be started with injection retarded (from full advance position). This feature greatly aids in starting.

Since transfer pump fuel pressure increases with an increase in engine speed and decreases with a decrease in engine speed, the transfer pump fuel pressure is used to control the movement of the automatic advance power piston working against spring pressure.

Controlled movement of the cam in the pump housing is induced and limited by the action of the power piston and spring piston of the automatic advance against the cam advance screw.

During cranking the cam is in the retarded position because the force of the fuel on the power piston is not great enough to overcome the spring pressure. As engine rpm and fuel pressure increase, fuel pressure on the power piston overcomes the spring pressure, thus moving the cam to the advanced position. A check valve is used on the inlet side of the power piston to offset the tendency of the cam to return to the retarded position during each injection. *Power piston side is on the side of the pump having the letter "C" in raised print on housing.*

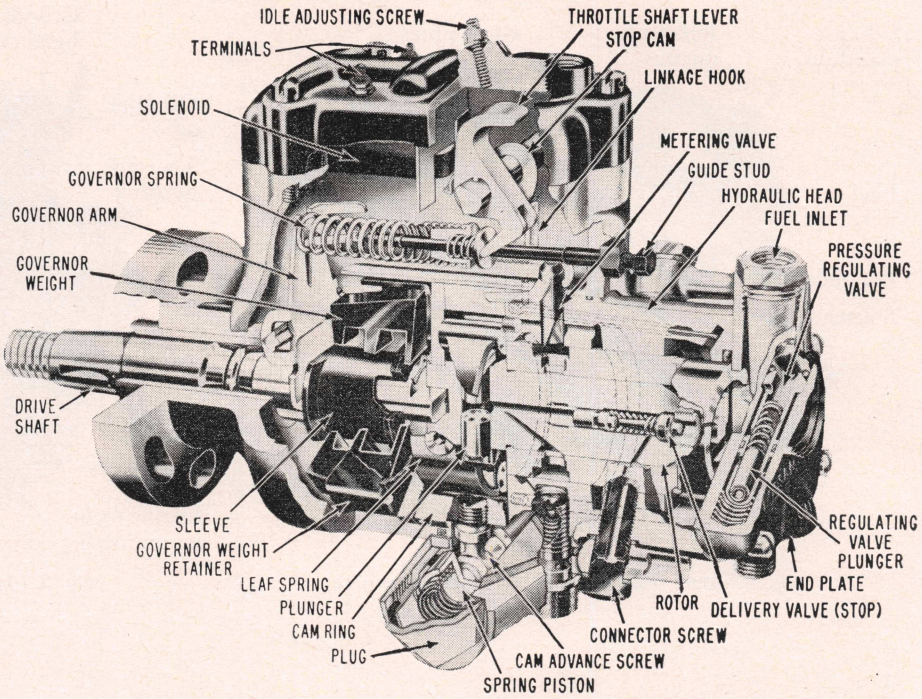

Fig. 5 Cutaway view of fuel injection pump

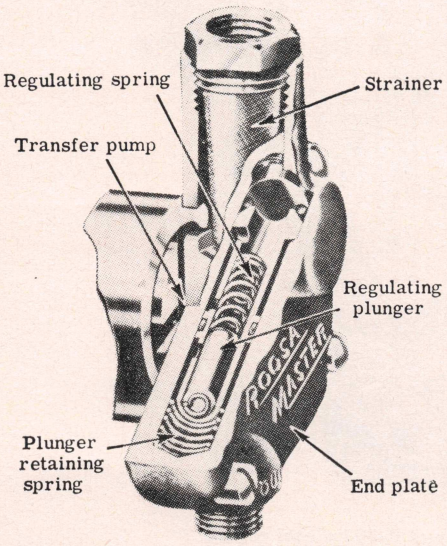

Fig. 6 Cutaway view of end plate assembly

TROUBLE SHOOTING

Fuel Not Reaching Pump

1. Electric shut-off inoperative.
2. Seizure of distributor rotor.
3. Hand primer installed backwards.
4. Engine rotation wrong.
5. Filters or strainer clogged.
6. Fuel too heavy at low temperature.
7. Transfer pump liner locating pin in wrong hole for correct rotation.
8. Transfer pump blades worn or broken.
9. Fuel lines clogged or restricted.
10. End plate regulating piston sticking in "prime" position.
11. Air leaks on suction side of system.

Fuel Delivered From Transfer Pump But Not To Nozzles

1. Shut-off device at "stop".
2. One or more connector screws obstructed.
3. Metering valve sticking or closed.
4. Governor spring worn or broken.
5. Governor linkage broken.
6. Governor not operating; parts or linkage worn, sticking or binding, or incorrectly assembled.
7. Metering valve incorrectly assembled.
8. Fuel lines clogged or restricted.

9. Cam backwards in housing.
10. Cam roller shoes sticking.
11. Plunger missing.
12. Plungers sticking.
13. Passage from transfer pump to metering valve clogged with foreign matter.
14. Rotors badly scored.

Fuel Reaching Nozzles But Engine Won't Start

1. Cranking speed too low.
2. Engine engaged with load.
3. Pump timed incorrectly to engine.
4. Throttle arm travel not sufficient.
5. Intake air temperature low.
6. Water in fuel.
7. Worn advance pistons (incorrect cam position).
8. Injection pipes leaking or connected to wrong cylinders.
9. Cam, shoes or rollers worn.
10. Maximum fuel setting at low limit or too low.
11. Excessive fuel leakage past plungers (worn or badly scored).
12. Shut-off device interfering with governor linkage.
13. Automatic advance faulty or not operating.
14. Nozzles faulty or sticking.
15. Fuel too heavy at low temperature.
16. Rotor badly scored.
17. Poor engine compression.
18. Lube oil too heavy at low temperature.
19. Low cetane fuel.

Engine Starts Hard

1. Engine engaged with load.
2. Cranking speed too low.
3. Intake air temperature low.
4. Pump timed incorrectly to engine.
5. One or more connector screws obstructed.
6. Fuel lines clogged or restricted.
7. Air leaks on suction side of system.
8. Filters or strainer clogged.
9. Fuel too heavy at low temperature.
10. Lube oil too heavy at low temperature.
11. Water in fuel.
12. Poor engine compression.
13. Low cetane fuel.
14. Transfer pump blades worn or broken.
15. End plate regulating piston sticking in "prime" position.
16. Transfer pump faulty (pressure too low).
17. Shut-off device interfering with governor linkage.
18. Metering valve sticking or closed.
19. Governor linkage out of adjustment.
20. Governor not operating; parts or linkage worn, sticking or binding, or incorrectly assembled.
21. Maximum fuel setting at low limit or too low.
22. Cam, shoes or rollers worn.
23. Plungers sticking.
24. Excessive fuel leakage past plungers (worn or badly scored).
25. Wrong advance pistons (incorrect cam position).
26. Automatic advance faulty or not operating.
27. Rotor delivery valve screw loose or leaking.
28. Nozzles faulty or sticking.
29. Engine valves faulty or out of adjustment.
30. Rotor badly scored.
31. Advance unit incorrectly adjusted.

Engine Starts and Stops

1. Fuel lines clogged or restricted.
2. Water in fuel.
3. Air intake restricted.
4. Return oil line restricted.
5. Engine overheating.
6. Filters or strainer clogged.
7. Air leaks on suction side of system.
8. Metering valve sticking or closed.
9. Transfer pump blades worn or broken.
10. Cam roller shoes sticking.
11. Plungers sticking.
12. Advance unit incorrectly adjusted.

Erratic Engine Operation: Surge, Misfiring, Poor Governor Regulation

1. Injection pipes leaking or connected to wrong engine cylinders.
2. Fuel lines clogged or restricted.
3. Filters or strainer clogged.
4. Pump timed incorrectly to engine.
5. Water in fuel.
6. Low cetane fuel.
7. Pump housing not full of fuel.
8. Air leaks on suction side of system.
9. Nozzles faulty or sticking.
10. Engine valves faulty or out of adjustment.
11. Wrong advance pistons (incorrect cam position).
12. Automatic advance faulty or not operating.
13. Metering valve sticking or closed.
14. Governor not operating; parts or linkage worn, binding or sticking, or incorrectly assembled.
15. Governor spring worn or broken.
16. Governor linkage out of adjustment.
17. Governor sleeve binding on drive shaft.
18. Governor spring rate too low.
19. Transfer pump blades worn or broken.
20. Transfer pump faulty (pressure too low).
21. End plate regulating piston sticking.
22. Rotor delivery valve screw loose or leaking.
23. Cam roller shoes sticking.
24. Tang drive worn in excess of .008".
25. Plungers sticking.
26. Advance unit incorrectly adjusted.

Engine Idles Poorly

1. Water in fuel.
2. Pump housing not full of fuel.
3. Air leaks on suction side of system.
4. Pump timed incorrectly to engine.
5. Transfer pump blades worn or broken.
6. Governor not operating; parts or linkage worn, sticking or binding, or incorrectly assembled.
7. Metering valve sticking or closed.
8. Governor linkage out of adjustment.
9. Idle spring incorrect or missing.
10. Nozzles faulty or sticking.
11. Wrong advance pistons (incorrect cam position).
12. Automatic advance faulty or not operating.
13. End plate regulating piston sticking.
14. Fuel lines clogged or restricted.
15. Low cetane fuel.
16. Governor spring wrong or broken.
17. Engine valves faulty or out of adjustment.
18. Governor linkage broken.
19. Excessive fuel leakage past plungers (worn or badly scored).
20. Plungers sticking.
21. Advance unit incorrectly adjusted.

Engine Won't Develop Full Power or Speed

1. Throttle arm travel not sufficient.
2. Shut-off device interfering with governor linkage.
3. Incorrect governor high idle adjustment.
4. Fuel lines clogged or restricted.
5. Air leaks on suction side of system.
6. Filters or strainer clogged.
7. Pump timed incorrectly to engine.
8. Return oil line restricted.
9. One or more connector screws obstructed.
10. Governor not operating; parts or linkage worn, sticking or binding, or incorrectly assembled.
11. Metering valve sticking or closed.
12. Governor linkage out of adjustment.
13. Wrong advance pistons (incorrect cam position).
14. Automatic advance faulty or not operating.
15. Transfer pump blades worn or broken.
16. Transfer pump faulty (pressure too low).
17. Maximum fuel setting at low limit or too low.
18. Cam, shoes or rollers worn.
19. Plungers sticking.
20. Excessive fuel leakage past plungers (worn or badly scored).
21. Tang drive worn in excess of .008".
22. Rotor badly scored.
23. Low cetane fuel.
24. Rotor delivery valve screw loose or leaking.
25. Water in fuel.
26. Poor engine compression.
27. Advance unit incorrectly adjusted.

Engine Smokes Black

1. Exceeding rated load.
2. Air intake restricted.
3. Engine overheating.
4. Pump timed incorrectly to engine.
5. Nozzles faulty or sticking.
6. Engine valves faulty or out of adjustment.
7. Automatic advance faulty or not operating.
8. Low cetane fuel.
9. Wrong advance pistons (incorrect cam position).
10. Poor engine compression.
11. Cam, shoes or rollers worn.
12. Maximum fuel setting too high.
13. Advance unit incorrectly adjusted.

Engine Smokes Blue

1. Engine cold.
2. Excess lube oil in air cleaner.
3. Pump timed incorrectly to engine.
4. Wrong advance pistons (incorrect cam position).
5. Automatic advance faulty or not operating.
6. Tang drive worn in excess of .008".
7. Lube oil pumping past valve guides or piston rings in engine.
8. Advance unit incorrectly adjusted.

INJECTION PUMP, REPLACE

Removal

1. Turn crankshaft so that No. 1 piston is 2° before TDC on compression stroke.
2. Clean pump of all dirt before removal.
3. Remove all fuel lines between injection pump and nozzles.
4. Disconnect fuel filter-to-pump hose. Disconnect fuel return line at pump.
5. Disconnect throttle linkage.
6. Disconnect electrical connections to solenoid terminal on pump cover.
7. Loosen two adapter plate stud nuts. *Because of limited space the top nut will have to be run off the stud as the pump is being removed from the engine.* The pump drive shaft will remain in the front plate, keyed and secured with a nut to the pump drive gear.
8. Plug fuel inlet and return openings to keep dirt out of pump and discharge ports. *If pump requires service it should be returned to an authorized International dealer.*

Installation & Timing

1. Before installing pump on engine, check condition of drive shaft oil seals and replace if necessary.
2. Note the position of the small hole drilled in the end of the pump drive shaft. Likewise note the position of the hole drilled in the end of the distributor rotor. *These holes must meet when the pump is installed correctly. If they do not meet, use a clean screwdriver and turn the rotor to align the holes.* It is assumed that the engine has not been disturbed since removing the pump.
3. Position the pump and use a suitable tool to compress and protect the seal when installing the pump. Using a "wringing" motion while pushing on the pump, lead the pump on the shaft and past the seals. *The top stud nut and washer will have to be placed on the stud before the pump is tight against the front plate because of limited space.* Before tightening the nuts, remove the timing line window cover and if the marks are not aligned, rotate the pump housing until they are aligned, then tighten the two pump stud nuts. *Do not attempt to time pump while engine is running.*
4. Install fuel lines between pump and nozzles. Be sure copper washers are in place on each side of banjo fittings.
5. Connect hose from pump to filter, and connect fuel return line.
6. If engine has been moved while pump was off, retime as follows:
7. Turn engine over until No. 1 piston is 2° before TDC on the compression stroke. The timing pointer should indicate 2° advance on pulley calibration. Be sure this setting is established before installing pump.
8. Install the pump as outlined above. To be sure the installation is correct, remove the pump gear inspection cover and note the position of the timing marks on the gear hub and sleeve. A separation of approximate $\frac{3}{32}$" between the marks will be normal. These marks should be at the "5 o'clock" position.
9. Remove the timing window from the pump. The timing line on the cam must be lined up with the line on the governor weight retainer. If the line on the governor weight retainer does not show at all, the retainer is 180° out of time. To correct, the governor weight retainer should be installed over the rotor so that the stamped mark in the retainer is lined up with the stamped mark on the rotor.

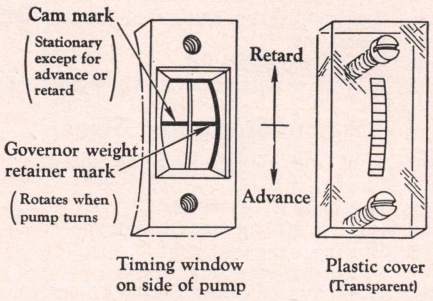

Fig. 7 View through plastic timing window

VENTING FUEL SYSTEM

Whenever the fuel pump or fuel lines have been removed the system should be vented as follows:

1. Open the vent valves on the fuel filters and hand prime the system until fuel flows from the vents; then close the valve.
2. Continue hand-priming until fuel flows from the fuel by-pass fitting in the injection pump cover; then tighten this connection.
3. Try starting the engine *but do not crank with the starting motor for more than 30 seconds at a time.* If the engine does not start, loosen the fuel pipe nuts at No 1 and No. 2 injection nozzles (use two wrenches). Crank the engine until fuel appears. Tighten the nuts and try starting the engine again. If the engine still won't start, bleed air from the other four injector lines in the same manner.

NOZZLE TESTING

Carefully clean the fuel line connections at each nozzle. Disconnect them one at a time and attach a flexible hose from a test pump to the nozzle fitting. Install a pressure gauge of at least 1500 psi on the test pump. Operate the test pump to bring the pressure rapidly up to the opening pressure (850-1050 psi). Valve seat leakage should not occur below 700 psi. This seat leakage will be indicated by a dropping off of the pressure within a short period of time.

An injection service mechanic should make prior studies, using nozzles he may have encountered in the field, and learn the pressure gauge indications for a good nozzle as compared with a nozzle which is operating poorly.

The distinctly different gauge action is easy to detect, and a mechanic can become experienced in "blind analysis" of nozzles very quickly. Proceed to test each nozzle, recording opening pressure, chatter condition, and leakage rate when pressure is brought up to within 100 psi of opening pressure. If sufficient cause is found at this point for poor performance reported, the search can end and necessary repairs made.

FUEL KNOCK

Fuel knock is often noticeable when a nozzle is leaking into the cylinder. It is a loud noise similar to a piston slap. To locate an engine fuel knock, loosen the fuel line connection (use two wrenches) at each nozzle. This will cut off fuel flow to that cylinder. If pre-ignition is the cause of the knock, the noise will cease when the faulty nozzle is disconnected.

ELECTRICAL SHUT-OFF DEVICE

Fuel is allowed to flow through the injection pump when an electrical solenoid located in the pump housing cover is energized to run. De-energizing the solenoid allows the shut down coil spring to open the shut down arm. The lower end of the arm moves a governor linkage hook, which rotates the metering valve to the closed position, cutting off the fuel.

ADJUSTMENTS, PUMP ON ENGINE

Improper timing or faulty operation of the speed advance mechanism can cause one or more of the following conditions: hard starting, misfiring at speeds between 1500 and 3000 rpm. loss of power, increased fuel consumption.

Static Injection Timing

1. With engine shut down, install the special plastic timing window, SE-1999-4, Fig. 7. Note the location of the cam timing line. *Due to variations in plastic windows, hole locations and basic pump specifications, the cam line might not be exactly behind the center window line.*
2. Turn engine over in normal direction of rotation until the timing line on the governor weight retainer aligns with the cam center line, Fig. 7. Note the timing mark on the crankshaft pulley indicated by the pointer on the front cover. *Do not attempt to time pump while engine is running.*

Maximum No Load Governed Speed

With engine running at normal operating temperature, hold the throttle lever all the way to the rear. Adjust the

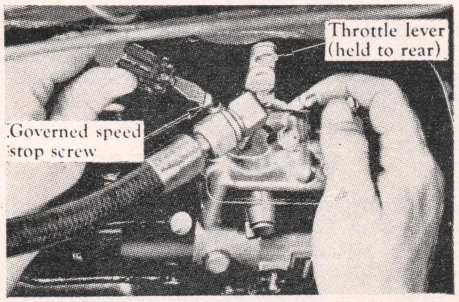

Fig. 8 Adjusting governed speed stop screw

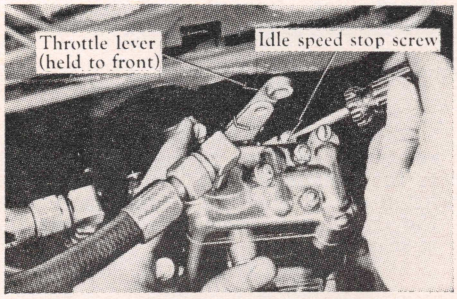

Fig. 9 Adjusting idle speed stop screw

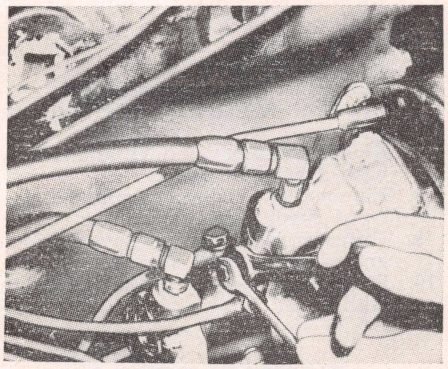

Fig. 10 Adjusting idle speed bumper

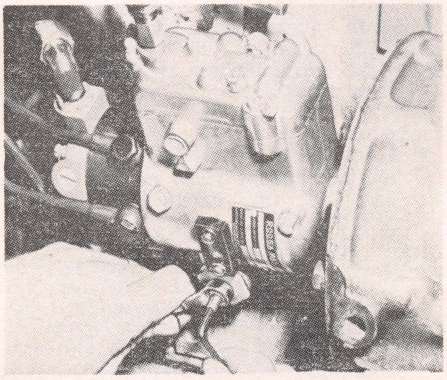

Fig. 11 Adjusting advance trimming screw

governed speed stop screw, Fig. 8, until the specified speed is obtained.

Idle Speed

With engine running at normal operating temperature, back out the guide stud as indicated in the idle bumper adjustment below. Then hold throttle lever all the way forward and adjust the idle stop screw, Fig. 9, until specified idle speed is obtained.

Idle Bumper

Idle bumper controls idle surge and prevents stall on deceleration. Adjust as follows with engine at normal operating temperature; Fig. 10.

1. Back out guide stud (bumper) so that approximately four threads show beyond lock nut.
2. Adjust idle stop screw to obtain specified rpm.
3. Turn guide stud in until speed increases 10 to 30 rpm.
4. Back guide stud out 1/12 turn and lock. With guide stud in this position, there should be a slight gap between bumper assembly and governor arm. If idle surge or stalling occurs guide stud can be adjusted "in" slightly.

Advance Unit

Before starting engine, note cam line position. This will be the retard position. Warm up engine. At 1000 rpm cam should be in retard position. Increase speed to maximum governed no load speed, at which time cam should be in full advance (lowest) position. If advance does not meet with specifications, adjust advance trimming screw, Fig. 11. Replace timing window with cover plate and gasket.

After all the foregoing checks, if the speed advance is not operating properly, check the transfer pump for low pressure. Also check for seized advance pistons, seized cam, dirt, wear or corrosion. When any of these conditions exist, the pump must be removed from the engine and serviced by an authorized International establishment.

ENGINE, REPLACE

The engine may be removed from the chassis as an assembly complete with accessories. Only the air cleaner need be removed. The transmission is separated from the engine at the flywheel housing. Drain cooling system and crankcase. Disconnect battery ground cable and tape end of terminal to prevent accidental grounding.

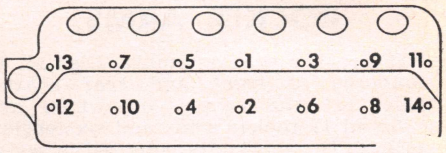

Fig. 12 Cylinder head tightening sequence

On conventional models, only the hood, fan and radiator need be removed before the engine can be lifted out of the chassis. Remove the hood hinge bracket mounting bolts from the cowl and lift off the hood. Remove upper and lower hoses. Remove fan and pulley. Unfasten and remove radiator and fan shroud.

On forward control models, it will be necessary to remove hood, fenders, shell and radiator from chassis.

Disconnect Points On Engine

1. Fuel inlet and fuel by-pass line from fuel injection pump.
2. Throttle control lever at pump.
3. Exhaust pipe at manifold.
4. Wiring harness from generator, starter, glow plug terminal, fuel shut-off terminal on pump, and temperature sending unit (all on right side of engine) and from oil pressure sending unit on left side of engine.
5. Vacuum line from vacuum pump.
6. Tachometer drive cable from oil pump shaft support on left side of engine.
7. Engine ground strap.
8. After removing engine front mountings and separating flywheel housing from engine, attach lifting rig and remove engine from chassis.

CYLINDER HEAD

Cylinder heads should be tightened in the sequence shown in Fig. 12 and to the proper torque (given in *Engine Tightening* table). Do not tighten to full torque the first time around; it is advisable to tighten to full torque in three steps.

Re-tighten the cylinder head after the engine has been operated for 50 to 100 hours. Then only those bolts below proper torque are to be tightened to specifications.

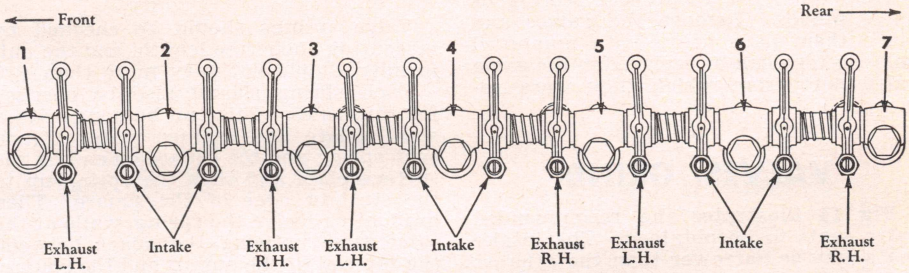

Fig. 13 Rocker arm assembly

ROCKER ARMS

The rocker arm assembly, Fig. 13, is composed of front and rear shafts, joined at the center, on which are mounted 12 rocker arms and six tension springs. The shafts are mounted in seven brackets and are prevented from turning by grooves in the ends of the shafts.

Separate the shafts and slide off the rocker arms, springs and brackets. The No. 2, 4 and 6 (front to rear) rocker arm brackets have sleeve dowels which keep the rocker arm assembly aligned. The three hold-down brackets are reamed from the bottom side so that the sleeve dowels will fit tight into the brackets. About half of the dowel is in the bracket, the remaining half fits into the head. When removing the rocker arm assembly, the dowels will remain in the hold-down brackets.

All six intake rocker arms are alike. However, there are three left-hand and three right-hand exhaust rocker arms and three different types of rocker arm brackets. Four of the rocker shaft brackets are of one type and are used in positions 2, 4, 5, and 6, Fig. 13. These brackets are drilled and reamed to accept the sleeve dowel. The bracket used in position 3 contains an enlarged bolt hole, and is used as the oil supply inlet for the rocker arm assembly.

VALVES, ADJUST

To adjust valve lash, each cylinder must be brought up to top dead center on its compression stroke when adjusting valves for that cylinder. To determine the correct position, turn the engine crankshaft until No. 1 piston is at top dead center on its compression stroke and stop when the TDC mark on crankshaft pulley is in line with the pointer on the timing case cover.

Adjust each valve to the clearance given in the *Valve Specifications* table and then, turning over the engine according to its firing order progressively, adjust the remaining valves.

After the engine has run long enough to bring it to operating temperature, recheck and, if necessary, adjust the clearances.

VALVES, REMOVE

After removing the cylinder head and rocker arm assembly, use a suitable spring compressor to compress the springs. Remove the valve locks and springs. Check the keeper grooves in the valve stems for burrs and remove any burrs with a file to prevent scoring of valve guides. Remove the valves and place them in a board with numbered holes so they can be replaced in the same valve port from which they were removed.

VALVES, GRIND

Fig. 14 illustrates the recommended valve seats to be obtained. The intake seats may be narrower than the exhaust because they are usually larger in diameter, thus providing a total seat area approximately equal to smaller exhaust valve with the wider seat. Also the less severe heat conditions do not require as large a seat area for heat dissipation purposes.

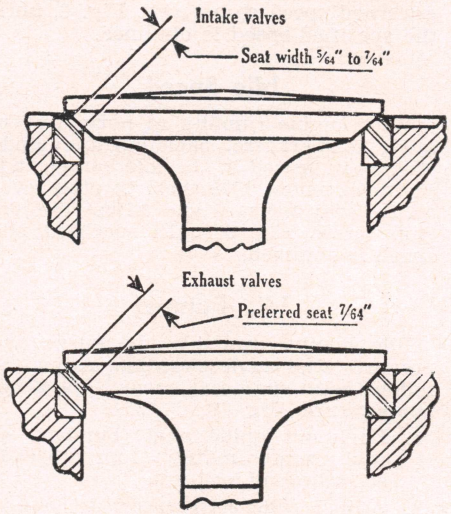

Fig. 14 Valve seat widths

There are also objections to an excessively wide seat. In city or light delivery service, a wide seat collects carbon and particles of dirt that will produce variations or loss of compression, resulting in poor idle and possibly a loss of general performance and economy.

A wide seat in severe service, operating in the presence of dirt or an excess of carbon, will produce a badly pitted seat which may be just as detrimental to valve life as a too narrow seat. Under these conditions, a seat width to the minimum limit would possibly be better. However, the source of trouble (dirt, carbon) should be eliminated, making it possible to retain the wider seat.

VALVE SEAT INSERTS

If replacement of a valve seat insert becomes necessary, it is important that the new insert be securely peened in place, using either an insert peening tool or a dull-pointed chisel, ¼" wide, to peen the cylinder head or block metal over the outer edge of the valve seat insert.

Valve seat inserts supplied for service are standard size and .030" oversize which permits a tight fit.

VALVE SPRINGS

Valve springs should be checked by measuring their free length, and the uniformity should not vary more than $\frac{1}{16}$".

Each spring should also be checked for squareness. This can be done with a steel square and surface plate. Stand each spring and the square on end on the surface plate and slide the spring up to the straight edge of the square. Then gradually revolve the spring, while at the same time noticing the space between the top coil of the spring and the square. This space should not exceed $\frac{1}{16}$"; if more, replace the spring.

Valve springs should be checked for tension with a spring tester. Any spring that does not conform to the specifications listed in the chart within 10% should be replaced.

VALVE GUIDES

Clean valve guides with a suitable cleaning tool. Then check each valve guide with a "GO and NO-GO" gauge, if available; otherwise, use a new valve to check the fit. If the "NO-GO" portion of the gauge enters, the guide must be replaced.

Clearance in excess of .006" for intake valves and .008" for exhaust valves, calls for replacement of valve guides.

New guides should be installed so that the distance from the cylinder head to the top of the guide is .938".

VALVE LIFTERS

Valve lifters or tappets are of the barrel type, operating in guide holes bored in the cylinder block. The lifters can be lifted out of the block after taking off the engine side cover and removing the push rods.

TIMING GEAR COVER

1. To remove cover, remove fan, belts and water pump.
2. Position No. 1 piston on top dead center of the compression stroke. *Remove glow plugs before cranking engine.*
3. Remove generator.
4. Remove oil cooler hoses.
5. Remove engine front support.
6. Remove crankshaft end nut and washer.
7. Remove fan drive pulley and damper with a suitable puller.
8. Remove two front oil pan bolts in front cover.
9. Unfasten and remove cover, gasket and crankshaft oil slinger.
10. Reverse foregoing procedure to install cover.

TIMING GEARS

Before removing any gears, it is advisable to check the backlash and end play of the gears to determine which, if any, require service. Backlash between injection pump gear and idler gear should be .003" to .009"; between idler gear and crankshaft gear .003" to .006"; between camshaft and crankshaft gears .003" to .006". If gears are to be removed, proceed as follows:

1. Remove injection pump gear and shaft, being careful not to drop or lose the thrust button or spring inside the button.
2. Remove injection pump.
3. When camshaft gear is removed, do not turn crankshaft without first backing off all the valve lash adjusting screws. This is to relieve the rocker arms and allow all valves to seat, thereby avoiding damage by piston up-strokes.
4. Install puller and remove camshaft gear.

5. Remove camshaft thrust plate.
6. Remove idler gear and shaft.
7. Remove crankcase front plate.
8. Remove crankshaft gear.

Installation Note

For correct valve timing, align the single punch mark space on the camshaft gear with the single punch marked tooth on the crankshaft gear, Fig. 15.

Install the idler gear, being certain to match the double punch mark space on the crankshaft gear with the double punch mark on the tooth of the idler gear. When installing the shaft, align the oil hole in the shaft with the hole in the front plate, and the locating pin with the hole in the front plate. The lower hole is the oil hole.

Install the injection pump gear, lining up the single punch mark tooth of the gear with the single punch mark space of the idler gear.

When installing the injection pump, refer to the instructions under that heading.

CAMSHAFT & BEARINGS

The camshaft is located in the crankcase on the right-hand side of the engine and is held in position by a thrust plate. The camshaft is supported along its length by four bushings. The bushings are removable and are furnished for service reamed to size.

The camshaft bearings are pressure lubricated and have oil holes drilled in them. When the bushings are installed, the oil holes must be aligned with the ones drilled in the crankcase. Slots in the camshaft permit lubricating oil travel to the valve mechanism.

PISTONS & RODS, ASSEMBLE

Pistons are assembled to the connecting rods so that when installed in the cylinders the front of the piston will be indicated by the letter "F" and the numbered side of the rod will be on the camshaft side of the engine.

PISTONS & CYLINDERS

Measure the piston skirt at right angles to the pin to determine if it is worn excessively. Each cylinder bore should be checked with an inside reading micrometer to determine taper, out-of-round or worn condition. Measure the diameter of the cylinder at the top of the piston ring travel at a right angle to the centerline of the crankshaft. Record the readings. Next, measure each bore so the gauge reading coincides with the centerline of the crankshaft. The difference between the readings is the out-of-round condition at the top of the bore.

Repeat this procedure at the bottom of the ring travel. The difference between the diameters measured at the top and bottom of the bore is the taper of the bore. Rebore cylinders if worn beyond .008", and fit new pistons to the clearance specifications given in the chart.

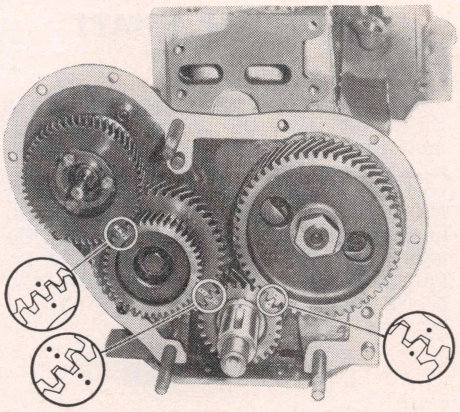

Fig. 15 Matching timing gear marks

PISTON RINGS

Always use standard size rings in cylinder bores that are standard at the bottom of the ring travel, regardless of the amount of taper in the bore. Oversizes must be determined by the measurement of the narrowest portion of the bore.

New rings should be fitted according to the instructions furnished with the ring package. Ring grooves must be clean and free from carbon and must show no perceptible wear.

PISTON PINS

To remove the piston pins, heat the piston in boiling water or a piston heater. Place the piston in a piston vise and, using a pin driving tool, drive the pin from the piston and connecting rod.

With the piston pin at room temperature (70°) and coated with clean engine oil, and the piston heated in hot water to approximately 150°, the pin can be entered into one boss of the piston by pushing with the hand. While the piston is hot, quickly and correctly position the connecting rod inside the piston, align the bushing in the rod bore with the piston holes in the piston and push the pin completely into position. Thoroughly dry the piston with compressed air. Install a retainer ring in the groove at each side of the piston to secure the pin.

ROD BEARINGS

These bearings are of the precision insert type, requiring no scraping or reaming.

When installing bearings, be sure the back of the bearing shells as well as the bearing seats in the rods are smooth and clean.

Bearing clearance may be checked with Plastigage, which is available at any auto parts jobber. Instructions for its use are furnished with the package.

Lacking Plastigage, however, use a piece of tough paper or shim stock ¾" square which measures about .0005" under the maximum allowable bearing clearance. Oil the shim on both sides and lay it in the center of the bearing. Install the assembled bearing and cap and tighten the cap bolts to normal tension.

The clearance is correct if the rod can be moved endwise when tapped lightly with a hammer. If the rod can be moved endwise by hand, clearance is too great. On the other hand, if the rod will not move when tapped lightly with a hammer, not enough clearance is present.

When using a torque wrench tighten bearing caps to the torque loads given in the table.

MAIN BEARINGS

These bearings are of the insert type, requiring no reaming or scraping. They may be removed and replaced without removing the crankshaft.

Plastigage may be used to check bearing clearances, and instructions for its use are furnished with the package.

Lacking Plastigage, an alternate method is to use a piece of tough paper or shim stock 1" square which measures about .001" under the maximum allowable bearing clearance. Oil the shim on both sides and lay it in the center of the bearing. Install the assembled bearing and cap and tighten the cap bolts to normal tension.

Rotate the crankshaft through a two-inch arc (one each way) and if it is movable with a fairly heavy drag, the clearance is correct. If there is no perceptible drag, the clearance is too great. On the other hand, if the shaft cannot be moved, not enough clearance is present.

Be sure that the bearings are smooth and clean on both sides when installed. This applies to the bearing seats as well.

When using a torque wrench, tighten bearing caps to the torque loads given in the table.

CRANKSHAFT REAR SEALS

The following procedure should be followed for proper installation of the rear main bearing cap, seal and sealing plugs:

1. With special aligner dowels in place, Fig. 16, rear main bearing cap bolts should be installed finger tight only.
2. Place seal on installer tool, Fig. 17.
3. Install oil seal over crankshaft flange with special tool and start seal into bearing cap crankcase bore. *Caution: ⅛" of seal must project back of* crankcase rear face.
4. Torque the four bearing cap bolts to recommended torque and remove the two aligner dowels.
5. Place the sealing plug installer, Fig. 18, into sealing plug and lubricate

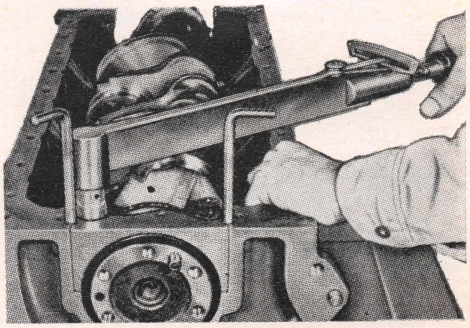

Fig. 16 Lining up rear main bearing cap by means of aligner dowels

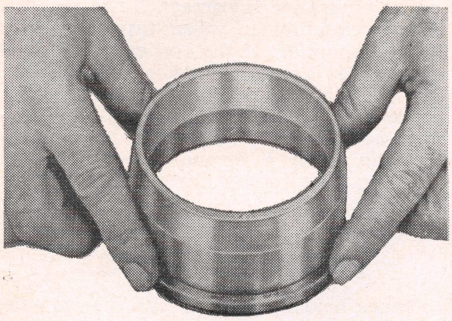

Fig. 17 Placing crankshaft rear seal on installer tool

outside of plug for ¾ of its length with quick-setting grease. *Do not allow plugs to set in free state after coating with grease.*

6. Push sealing plug into place until underside of plug flange is flat against pan rail.
7. Remove insert tool by giving half twist and then pulling out.
8. Use installing tool and press seal to its final location, Fig. 19.

OIL PUMP

A conventional gear type oil pump, located in the crankcase, is used. After removing the oil pan, the pump may be unfastened from its mounting and disassembled for repairs.

Inspect the pump gears for nicks or burrs. Inspect the bottom cover for wear and dress down on a surface plate with emery if necessary. Place the bottom cover on the pump and check the drive shaft end play. If end play is excessive (more than .006"), replace the drive and idler gears.

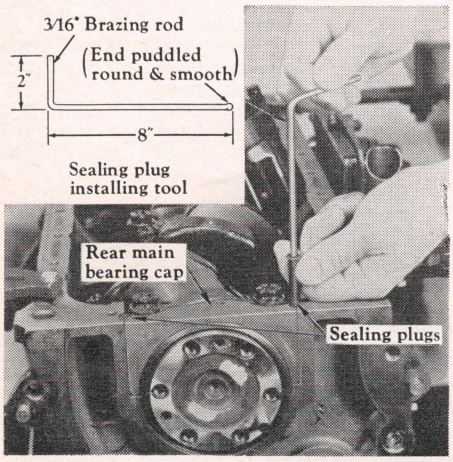

Fig. 18 Installing sealing plugs

OIL PUMP SHAFT SUPPORT

The oil pump shaft support, located on the left side of the engine, gives rigid mounting to the pump shaft and serves as a tachometer drive housing. The support will require little more than periodic maintenance. However, if excessive wear of the pinion or bushings is indicated the assembly can be disassembled and repaired. When servicing the support, refer to Fig. 20.

OIL COOLER

The oil cooler is mounted on the left side of the engine to the oil filter base. Two plugs are located in the oil manifold to allow draining the oil, and one plug is located in the bottom of the oil cooler to drain the cooler of water.

Improper care of the cooling system and lubricating oil system are the most probable reasons for poor engine oil cooler performance. When the cooler requires attention, remove and disassemble it; then immerse all parts in cleaning solvent to loosen any sludge or foreign matter. Drain and blow out any solvent and foreign matter inside the oil cooler and oil manifold. Be certain that all passages are clean and clear before reassembly.

Installation

1. Using a new gasket, secure oil cooler assembly to oil filter base.
2. Install and secure two hoses to oil cooler.
3. Install or close all cooling system and lubricating oil system drain plugs or valves, including the drain plug in the filter base.
4. Fill the cooling system.
5. Add one quart of the proper grade engine oil to the crankcase.
6. Run engine to refill filter and oil cooler.
7. Stop engine and check thoroughly for leaks. Also check crankcase oil level.

WATER PUMP

The pump used on these engines is of the sealed ball bearing type packed with lubricant at the time of assembly and requiring no further lubrication. When disassembling, carefully note the arrangement of the seal parts so that correct assembly may be assured, Fig. 21.

Never soak the shaft and bearing assembly in cleaning solvent because it will dissolve the lubricant. To clean the shaft and bearing, merely moisten a cloth with cleaning fluid and wipe away any surplus lubricant or other foreign matter.

Be sure the face of the housing against which the thrust washer turns is smooth and true. If not, smooth it up with a special water pump facing cutter.

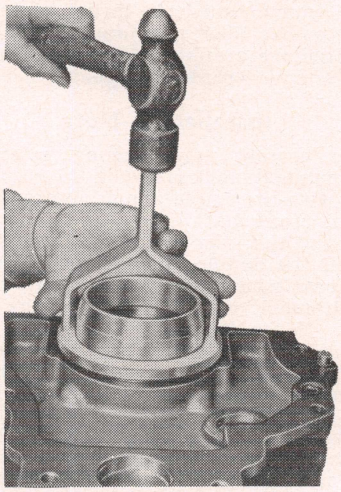

Fig. 19 Installing crankshaft rear seal

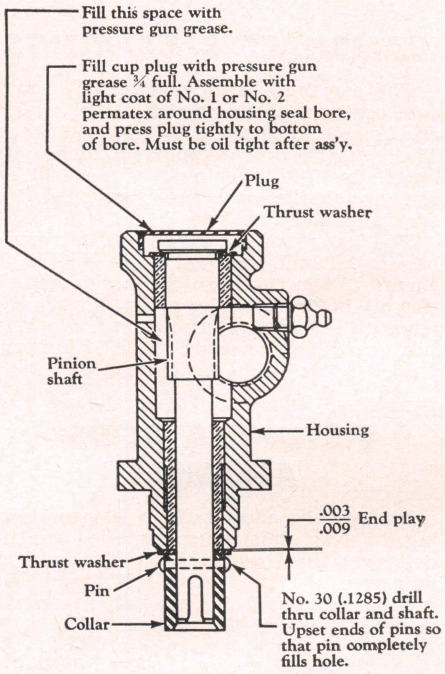

Fig. 20 Oil pump shaft support

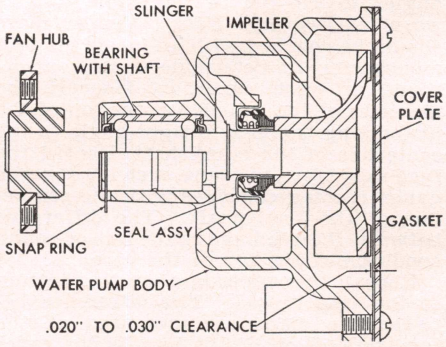

Fig. 21 Sectional view of water pump

INTERNATIONAL STANDARD TRUCKS

INDEX OF SERVICE OPERATIONS

PAGE NO.

AXLES, DRIVING
Eaton Axle Service 176
International Axles 799
Locking Differentials 169
Timken Axle Service 209

BRAKES
Adjustments 252
Air Brake System 259
Hydraulic Brake System 250
Vacuum Brake Boosters 268

CLUTCH 784

COOLING SYSTEM
Cooling System Capacity 766
Water Pump Repairs 782

ELECTRIC SYSTEM
Alternators & Regulators 37
Alternator Specifications ..... 768 and 769
Dash Gauge Service 93
Distributor Specifications 773
Distributor Service 7
Generator Specifications 771
Generator & Regulator Service 27
Ignition, Transistorized 22
Ignition Timing 782
Starting Motor Specifications 772
Starting Motor Service 65
Starter Switch Service 85

ENGINE
Camshaft & Bearings 779
Crankshaft Bearing Specifications 770

PAGE NO.

Crankshaft Oil Seal, Replace 781
Cylinder Head, Replace 775
Cylinder Sleeves 781
Engine, Replace 774
Main Bearings, Replace 781
Piston Pins, Replace 781
Piston Rings, Replace 781
Piston & Ring Specifications 770
Pistons & Rods, Remove 780
Piston & Rod, Assemble 780
Pistons, Replace 780
Rocker Arm Service 775
Rod Bearings, Replace 781
Timing Chain or Gears 779
Valves, Adjust 776
Valves, Grind 777
Valve Guides, Replace 778
Valve Lifters 779
Valves, Remove 777
Valve Rotators 777
Valve Seat Inserts 778
Valve Specifications 768
Valve Springs 778

ENGINE OILING
Crankcase Capacity 766
Crankcase Ventilation 6
Oil Pump Repairs 781

FUEL SYSTEM
Carburetor Adjustments 783
Carburetor Service Notes 782
Crankcase Ventilation 6
Fuel Pump Service 104
L.P.G. Carburetion 109

PAGE NO.

SPECIFICATIONS
Alternator & Regulator ..... 768 and 769
Carburetor Adjustment 783
Crankshaft & Bearing 770
Distributor 773
Engine Tightening Torque 769
Generator & Regulator 771
Piston, Pin & Ring 770
Starting Motor 772
Tune Up 768
Valve 768
Wheel Alignment 770

STEERING GEARS 800

TRANSFER CASES 242

TRANSMISSIONS
Clark 110
Fuller 122
International 788
Metro-Matic 300
Metro-Matic Adjustments 798
Metro-Matic Replace 799
New Process 135
Select-O-Matic 794
Spicer 141
Warner 164
Powermatic 281

TUNE UP SERVICE 2

INTERNATIONAL STANDARD TRUCKS

MODEL INDEX & ENGINE APPLICATION

ENGINE IDENTIFICATION—Engine model takes the form of a prefix to the engine serial number. For example, a V-266 engine serial number would read V-266-000000. Engine numbers are located on machined boss on cylinder block.

Truck Model	Standard Engine Make	Standard Engine Model	Oil Pan Capacity Refill Qts.	Cooling System Capacity Qts.
SCOUT & METRO-MITE MODELS				
Scout 80 (4 x 2)②	1HC	4-152	4	12
Scout 80 (4 x 4)②	1HC	4-152	4	12
CM-75 Metro-Mite	1HC	4-152	4	14
CM-80 Metro-Mite	1HC	4-152	4	14
AB & AM SERIES				
AB-120, 122	1HC	BD-220	7	15
AM-120, 122	1HC	BD-220	7	17
AM-130, 132	1HC	BD-220	7	16
AB-140, 142	1HC	BD-220	7	15
AM-150, 152	1HC	BD-220	7	17
AM-160, 162	1HC	BD-240	7	18
ACO & ACOF SERIES				
ACOF-190, 192, 195	1HC	V-401	10	46
ACO-195, 196	1HC	V-401	10	46
ACO-195 Fire Truck	1HC	V-461	10	46
ACO-200, 202, 205, 206	1HC	V-401	10	46
ACO-220, 222, 225	1HC	V-461	10	46
B, BC, BCF SERIES				
B-140, 142 (4 x 4)	1HC	V-266	6	23
B-150, 152	1HC	V-266	6	23
BC-150, 152	1HC	V-266	6	22
B-160, 162, 164, 165, 166	1HC	V-304	9	23
B-160 (4 x 4)	1HC	V-304	9	23
BC-160, 162, 164, 165	1HC	V-304	9	23
B-170, 172, 174, 175, 176	1HC	V-304	9	23
BC-170, 172, 174, 175	1HC	V-304	9	23
BC-170 (4 x 4)	1HC	V-304	9	23
BCF-170, 172	1HC	V-304	9	23
BCF-170, 172 (6 x 6)	1HC	V-304	9	23
B-180, 182, 184, 186	1HC	V-345	10	26
BC-180, 182, 184	1HC	V-345	10	26
BC-180 (4 x 4)	1HC	V-345	10	26
BCF-180, 182	1HC	V-345	10	26
BCF-180, 182 (6 x 6)	1HC	V-345	10	26
BC-1890, 1892	1HC	V-345	10	26
C, CM, CO, COF, COT SERIES				
C-100, 102	1HC	V-266	6	19
C-110, 112	1HC	V-266	6	19
CM-110, 112	1HC	4-152	4	14
C-120, 122	1HC	V-266	6	19
C-120 (4 x 4)	1HC	V-266	6	19
C-130, 132	1HC	V-266	6	19
C-150	1HC	BD-240	7	①
CO-190, 191, 192, 195	1HC	RD-372	9	39
COF-190, 191, 192, 195	1HC	RD-406	9	39
COT-195	1HC	RD-406	9	①
CO-200, 201, 202, 205	1HC	RD-406	9	39
CO-220, 221, 222, 225	1HC	RD-501	9	39

Truck Model	Standard Engine Make	Standard Engine Model	Oil Pan Capacity Refill Qts.	Cooling System Capacity Qts.
R, RF, RT SERIES				
R-185, 1856	1HC	RD-372	9	28
R-190, 191, 192, 194, 195, 196	1HC	RD-406	9	28
R-190 (4 x 4)	1HC	RD-372	9	28
RF-190, 191, 192, 195	1HC	RD-406	9	28
RF-190 (6 x 6)	1HC	RD-406	9	28
RT-195	1HC	RD-406	9	28
R-200, 201, 202, 205, 206	1HC	RD-406	9	28
R-210, 211, 212	1HC	RD-450	9	28
R-210 (4 x 4)	1HC	RD-450	9	28
RF-210, 211, 212	1HC	RD-450	9	28
RF-210 (6 x 6)	1HC	RD-450	9	28
R-220, 221, 222, 225	1HC	RD-501	9	30
V, VCO, VCOF, VCOT, VF, VT SERIES				
VCOF-190, 191, 192, 195	1HC	V-401	10	47
VF-190, 191, 192, 195	1HC	V-401	10	41
V-195, 196	1HC	V-401	10	41
VCO-195, 196	1HC	V-401	10	47
VCOT-195	1HC	V-401	10	47
VT-195	1HC	V-401	10	①
V-200, 201, 202, 205, 206	1HC	V-401	10	41
VCO-200, 201, 202, 205, 206	1HC	V-401	10	47
V-210, 211, 212	1HC	V-461	10	41
VF-210, 211, 212	1HC	V-461	10	41
V-220, 221, 222, 225	1HC	V-461	10	41
VCO-220, 221, 222, 225	1HC	V-461	10	47
VCO-405	1HC	V-461	10	49
VCOF-405	1HC	V-461	10	49
VCOT-405	1HC	V-461	10	49
SCHOOLMASTER (BUS) SERIES				
B-153	1HC	V-266	6	20
B-163	1HC	V-304	9	23
B-173	1HC	V-304	9	23
173-FC	1HC	BD-282	7	19
B-183	1HC	V-345	10	23
183-FC	1HC	BD-308	7	19
183-RE	1HC	V-345	10	①
1853-FC	1HC	RD-372	9	28
R-1853	1HC	RD-372	9	28
193-RE	1HC	V-401	10	①
1600, 1700, 1800 SERIES				
1600	1HC	V-304	9	21
1600 (4 x 4)	1HC	V-304	9	21
1603	1HC	V-304	9	21
1700	1HC	V-304	9	21
1700 (4 x 4)	1HC	V-304	9	21
F-1700	1HC	V-304	9	21
1703	1HC	V-304	9	21
1800	1HC	V-345	10	22
F-1800	1HC	V-345	10	22

MODEL INDEX & ENGINE APPLICATION continued

Truck Model	Standard Engine Make	Standard Engine Model	Oil Pan Capacity Refill Qts.	Cooling System Capacity Qts.
1803	1HC	V-345	10	22
1890	1HC	V-345	10	22
OFF HIGHWAY GASOLINE MODELS				
230 (4 x 2)	1HC	RD-501	9	28
230-V (4 x 2)	1HC	V-549	10	①
F-230 (6 x 4)	1HC	RD-501	9	28
F-230-V (6 x 4)	1HC	V-549	10	①
DIESEL MODELS				
BCF-195-D	Cummins	NH-180	①	39
BCF-195-DL	Cummins	NH-180	①	①
BCT-195-D	Cummins	NH-180	①	①
BCT-195-DL	Cummins	NH-180	①	①
RDF-190, 191, 192, 195	Cummins	C-160-B	①	①
DCO-200, 201, 202, 205	Cummins	C-175-B	①	①
RD-200, 201, 202, 205	Cummins	C-160-B	①	①
RD-210, 211, 212	Cummins	C-175-B	①	①
RDF-210-H	Cummins	NH-180	①	①
RD-220-H	Cummins	NH-180	①	①
BC-225-D	Cummins	NH-180	①	39
BC-225-DL	Cummins	NH-180	①	39
230-D (4 x 2)	Cummins	NH-180	①	①
F-230-D (6 x 4)	Cummins	NH-180	①	①
RDF-311	Cummins	NH-180	①	①
DC-400, DCF-400, DCT-400	Cummins	NH-180	①	42
D-405, DB-405	Cummins	NH-180	①	42
DCO-405, DCOF-405	Cummins	NH-180	①	42
DCOT-405, DF-405	Cummins	NH-180	①	42
DF-405, DBF-405	Cummins	NH-180	①	42
DT-405, DBT-405	Cummins	NH-180	①	42
RDF-411	Cummins	NH-180	①	

①—See Operators Manual as capacities vary between vehicles.
②—See Scout Chapter for repair data.

GENERAL ENGINE SPECIFICATIONS

Year	Engine Model	No. Cyls. & Valve Location	Bore & Stroke	Piston Displacement, Cu. In.	Compression Ratio ①	Maximum Brake H. P. @ R. P. M. ①	Maximum Torque, Lb. Ft. @ R. P. M. ①	Normal Oil Pressure, Lbs.
1961–63	4-152	4 In Head	3 7/8 x 3 7/32	152	8.19	87 @ 4400	135 @ 2400	50
1959–60	A-55	4 In Head	2 7/8 x 3 1/2	91	8.3	49 @ 4000	87 @ 2000	50
1955–63	BD-220	6 In Head	3 9/16 x 3 11/16	220	7.5	112 @ 3800	194 @ 1600	35
1955–63	BD-240	6 In Head	3 9/16 x 4.018	240	7.5	141 @ 3800	224 @ 2000	35
1955–63	BD-264	6 In Head	3 11/16 x 4 1/8	264	7.5	154 @ 3800	248 @ 2400	35
1952–56	BD-269	6 In Head	3 9/16 x 4 1/2	269	6.5	103 @ 2800	227 @ 1600	40
1953–63	BD-282	6 In Head	3 13/16 x 4 1/8	282	6.5	137 @ 3600	251 @ 1800	40
1955–63	BD-308	6 In Head	3 13/16 x 4 1/2	308	6.5	150 @ 3600	281 @ 2000	40
1952–54	RD-372	6 In Head	4 3/8 x 4 1/8	372	6.5	165 @ 3200	308 @ 1600	40
1955–63	RD-372	6 In Head	4 3/8 x 4 1/8	372	6.8	165 @ 3200	308 @ 1600	40
1952–63	RD-406	6 In Head	4 3/8 x 4 1/2	406	6.75	175 @ 3200	338 @ 1700	40
1952–63	RD-450	6 In Head	4 3/8 x 5	451	6.75	182 @ 3000	388 @ 1600	40
1955–63	RD-501	6 In Head	4 1/2 x 5 1/4	501	6.5	212 @ 3000	444 @ 1600	40
1952–55	SD-220	6 In Head	3 9/16 x 3 11/16	220	7.0	108 @ 3800	179 @ 1800	40
1952–55	SD-240	6 In Head	3 9/16 x 4.018	240	7.0	131 @ 3800	208 @ 2000	40
1959–63	V-266	8 In Head	3 5/8 x 3 7/32	266	8.4	155 @ 4400	227 @ 2800	50
1959–63	V-304	8 In Head	3 7/8 x 3 7/32	304	8.2	193 @ 4400	272 @ 2800	50
1959–63	V-345	8 In Head	3 7/8 x 3 21/32	345	8.1	197 @ 4000	309 @ 2200	50
1956–63	V-401	8 In Head	4 1/8 x 3 3/4	401	7.69	206 @ 3400	355 @ 2000	50
1956–63	V-461	8 In Head	4 1/8 x 4 5/16	461	7.21	226 @ 3200	420 @ 1600	50
1956–63	V-549	8 In Head	4 1/2 x 4 5/16	549	7.06	256 @ 3200	505 @ 2000	50

①—Current production.

TUNE UP & VALVE SPECIFICATIONS

Year	Engine Model	Firing Order	Spark Plugs		Ignition Timing		Valve Seat Angle, Degrees	Valve Clearance H-Hot. C-Cold		Valve Spring Pressure, Lb. @ In. Length
			Type⑩	Gap	Timing Mark	Location		Intake	Exhaust	
1961–63	4-152	1342		.028	5°BTC	Damper	45	Zero	Zero	188 @ 1 27/64
1959–60	A-55	1342		.025	Notch	Pulley	45	.015H	.015H	75 @ 1 17/32
1955–63	BD-220	153624	J8	.030	Dot	Flywheel	30	.025H	.025H	149 @ 1 11/16
1955–63	BD-240	153624	J8	.030	Dot	Flywheel	30	.025H	.025H	149 @ 1 11/16
1955–63	BD-264	153624	J8	.030	Dot	Flywheel	30	.025H	.025H	149 @ 1 11/16
1952–56	BD-269	153624	J7	.030	Notch	Pulley	①	.021H	.021H	111 @ 1 21/32
1952–57	BD-282	153624	J7	.030	Notch	Pulley	②	.021H⑥	.021H⑥	190 @ 1 15/32
1957–63	BD-282	153624	J7	.030	Notch	Pulley	②	.019H⑦	.019H⑦	190 @ 1 15/32
1952–57	BD-308	153624	J7	.030	Notch	Pulley	②	.021H⑥	.021H⑥	190 @ 1 15/32
1957–63	BD-308	153624	J7	.030	Notch	Pulley	②	.019H⑦	.019H⑦	190 @ 1 15/32
1952–56	RD-372	153624	J6	.030	Notch	Pulley	②	.022H	.022H	138 @ 1 45/64③
1957–63	RD-372	153624	J6	.030	Notch	Pulley	②	.025H	.025H	138 @ 1 45/64③
1952–56	RD-406	153624	J6	.030	Notch	Pulley	②	.022H	.022H	138 @ 1 45/64③
1957–63	RD-406	153624	J6	.030	Notch	Pulley	②	.025H	.025H	138 @ 1 45/64③
1952–56	RD-450	153624	J6	.030	Notch	Pulley	②	.022H	.022H	138 @ 1 45/64③
1957–63	RD-450	153624	J6	.030	Notch	Pulley	②	.025H	.025H	138 @ 1 45/64③
1955–56	RD-501	153624	J6	.030	Notch	Pulley	②	.022H	.022H	138 @ 1 45/64③
1957–63	RD-501	153624	J6	.030	Notch	Pulley	②	.025H	.025H	138 @ 1 45/64③
1952–53	SD-220	153624	J8⑧	.030	Dot	Flywheel	30	.020H	.020H	149 @ 1 11/16
1954–55	SD-220	153624	J8⑧	.030	Dot	Flywheel	30	.025H	.025H	149 @ 1 11/16
1952–53	SD-240	153624	J8⑧	.030	Dot	Flywheel	30	.020H	.020H	149 @ 1 11/16
1954–55	SD-240	153624	J8⑧	.030	Dot	Flywheel	30	.025H	.025H	149 @ 1 11/16
1959–63	V-266	18436572④	J8	.030	4°BTDC⑤	Damper	45	Zero	Zero	195 @ 1 13/32
1959–63	V-304	18436572④	J6	.030	TDC⑤	Damper	45	Zero	Zero	195 @ 1 13/32
1959–63	V-345	18436572④	J6	.030	TDC⑤	Damper	45	Zero	Zero	195 @ 1 13/32
1956–63	V-401	18736542④	⑨	⑨	5°BTDC	Damper	②	Zero	Zero	120 @ 1 21/32③
1956–63	V-461	18736542④	⑨	⑨	7°BTDC	Damper	②	Zero	Zero	120 @ 1 21/32③
1956–63	V-549	18736542④	⑨	⑨	7°BTDC	Damper	②	Zero	Zero	120 @ 1 21/32③

①—Intake 15° (silichrome valve 45°), exhaust 45°.
②—Intake 15°, exhaust 45°.
③—Outer spring.
④—Cylinder numbering (front to rear): Left bank 1–3–5–7, right bank 2–4–6–8.
⑤—Connect timing light to No. 8 spark plug.
⑥—Up to Engine No. 125000.
⑦—From Engine No. 125001 in 1957.
⑧—Long reach type H10.
⑨—Normal service J6(.030″), light service J8 (.030″), LPG models J6 (.017″).
⑩—Champion. Normal service.

DELCO-REMY ALTERNATOR SPECIFICATIONS

Model Number	Rating		Field Current Draw	Cold Output①			Brush Spring Tension Ounces	Torque Values	
	Voltage	Amperes		Amperes	Volts	Alt. R.P.M.		Pulley Nut Ft. Lbs.	Rectifiers Inch Lbs.
1117070	12	60	5.6–6.3	58	14	2500	13	50–60	200
1117078	12	60	5.6–6.3	58	14	2500	15	85–90	200
1117115	12	105	1.23–1.33	98	14	2500	13	85–90	200

①—Hot output controlled by regulator. See specification tables.

DELCO-REMY ALTERNATOR THREE-TERMINAL REGULATOR SPECIFICATIONS

Model Number	Alternator Field Ground Location	System Ground Polarity	Indicator Light Relay		Field Relay②				Voltage Regulator		
			Air Gap	Point Opening	Air Gap	Point Opening	Closing Voltage	Sealing Voltage	Air Gap	Voltage Range	Voltage Setting
9000554	External	Negative	.075	①	...	...	...	...	.075	13.6–14.2	14.0
1116895	...	...	...	...	.010	.020	7.0–9.0	11 Max.	...	...	...

①—Open at 2 volts lower than voltage regulator setting.
②—Separately mounted.

DELCO-REMY ALTERNATOR FOUR-TERMINAL REGULATOR SPECIFICATIONS

Model Number	Alternator Field Ground Location	System Ground Polarity	Field Relay			Voltage Regulator		
			Air Gap	Point Opening	Closing Voltage	Air Gap	Voltage Range	Voltage Setting
9000552	External	Negative	.014	.027	5.0–9.5	.075	13.6–14.2	14.0

ENGINE TIGHTENING SPECIFICATIONS★

★Torque specifications are for clean and lightly lubricated threads only. Dry or dirty threads produce increased friction which prevents accurate measurement of tightness.

Engine	Spark Plugs Ft. Lbs.	Cylinder Head Bolts Ft. Lbs.	Intake Manifold Ft. Lbs.	Exhaust Manifold Ft. Lbs.	Rocker Arm Shaft Bracket Ft. Lbs.	Rocker Arm Cover Ft. Lbs.	Connecting Rod Cap Bolts Ft. Lbs.	Main Bearing Cap Bolts Ft. Lbs.	Flywheel to Crankshaft Ft. Lbs.	Vibration Damper or Pulley Ft. Lbs.
4-152	28–30	75–80	40–45	40–45	75–80	....	40–45	75–80	45–55	100–110
A-55	28–30	45	....	....	....	....	35	77–80	35	....
BD-220	28–30	85–95	25–30	25–30	85–95	14–16	45–55	75–85	70–80	①
BD-240	28–30	85–95	25–30	25–30	85–95	14–16	45–55	75–85	70–80	①
BD-264	28–30	85–95	25–30	25–30	85–95	14–16	45–55	75–85	70–80	①
BD-269	28–30	100–110	25–30	25–30	100–110	14–16	60–70	100–110	90–100	①
BD-282	28–30	100–110	25–30	25–30	100–110②	14–16	65–75	100–110	90–100	①
BD-308	28–30	100–110	25–30	25–30	100–110②	14–16	65–75	100–110	90–100	①
RD-372	28–30	100–110②	25–30	25–30	25–30	....	65–75	100–110	150–160	①
RD-406	28–30	100–110②	25–30	25–30	25–30	....	65–75	100–110	150–160	①
RD-450	28–30	100–110②	25–30	25–30	25–30	....	65–75	100–110	150–160	①
RD-501	28–30	100–110②	25–30	25–30	25–30	....	65–75	100–110	150–160	①
SD-220	28–30	85–95	25–30	25–30	....	....	45–55	75–85	....	....
SD-240	28–30	85–95	25–30	25–30	....	....	45–55	75–85	....	....
V-266	28–30	90–100	40–45	40–45	....	....	45–55	75–85	45–55	100–110③
V-304	28–30	90–100	40–45	40–45	....	....	45–55	75–85	45–55	100–110③
V-345	28–30	90–100	40–45	40–45	....	....	45–55	75–85	45–55	100–110③
V-401	28–30	80–90	....	....	80–90	....	60–70	100–110	90–100	①
V-461	28–30	80–90	....	....	80–90	....	60–70	100–110	90–100	①
V-549	28–30	80–90	....	....	80–90	....	60–70	100–110	90–100	①

①—Pressed on. ②—Oil supply bolt 75-85. ③—Pulley hub bolt.

WHEEL ALIGNMENT SPECIFICATIONS

Front Axle Model①	Caster, Degrees	Camber, Degrees	Toe-In, Inch	Kingpin Inclination, Degrees
F-50	2–3	2	1/8–3/16	7 1/2
F-150	2–3	2	1/8–3/16	7 1/2
F-160	2–3	2	1/8–3/16	4
F-170	2–3	2	1/8–3/16	4
F-250	2–3	1	1/16–1/8	8
F-260	2–3	1	1/16–1/8	8
F-270	2–3	1	1/16–1/8	4
F-280	2–3	1	1/16–1/8	4
F-350	2–3	1	1/16–1/8	8
F-360	2–3	1	1/16–1/8	4
F-470	2–3	1	1/16–1/8	4
F-550	1 1/2–1 3/4	1	1/16–1/8	4
F-553	2–3	1	1/16–1/8	4
F-560	1 1/2–1 3/4	1	1/16–1/8	4
F-580	2–3	1	1/16–1/8	4
F-585	2–3	1	1/16–1/8	4
F-650	1 1/2–1 3/4	1	1/16–1/8	4
F-653	2–3	1	1/16–1/8	4
F-660	1 1/2–1 3/4	1	1/16–1/8	4
F-750	2–3	1	1/16–1/8	4
F-751	2–3	1	1/16–1/8	4
F-760	1 1/2–1 3/4	1	1/16–1/8	4
F-850	1 1/2–1 3/4	1	1/16–1/8	4
F-920	1 1/2–1 3/4	1	1/16–1/8	4
FA-1	2–3	2	1/8–3/16	4
FA-4	3	1 1/2	0–3/16	7
FA-10	2–3	2	1/8–3/16	4
FA-15	2–3	2	1/8–3/16	4

Front Axle Model①	Caster, Degrees	Camber, Degrees	Toe-In, Inch	Kingpin Inclination, Degrees
FA-20	2–3	1	1/16–1/8	4
FA-30	2–3	1	1/16–1/8	4
FA-40	2–3	1	1/16–1/8	4
FA-41	2–3	1	1/16–1/8	4
FA-48	2–3	1	1/16–1/8	4
FA-50	2–3	1	1/16–1/8	4
FA-60	2–3	1	1/16–1/8	4
FA-65	2–3	1	1/16–1/8	4
FA-68	2–3	1	1/16–1/8	4
FA-70	2–3	1	1/16–1/8	4
FA-80	2–3	1	1/16–1/8	4
FA-90	2–3	1	1/16–1/8	4
FA-91	2–3	1	1/8–3/16	4
FA-98	2–3	1	1/8–3/16	4
FA-100	2–3	1	1/16–1/8	5 1/2
FA-105	2–3	1	3/16–1/4	5 1/2
FA-110	2–3	1	1/16–1/8	5 1/2
FA-111	2–3②	1	3/16–1/4③	5 1/2
FA-112	1/2–1 1/2④	1	1/16–1/8	0
FA-113	1/2–1 1/2④	1	1/16–1/8	0
FA-115	2–3②	1	3/16–1/4③	5 1/2
FA-130	2–3	1	1/16–1/8	4
FA-132	1/2–1 1/2		1/16–1/8	8
FA-133	1/2–1 1/2		1/16–1/8	8
FA-208	2–3	1	3/16–1/4	5 1/2
FA-211	2–3	1	3/16–1/4	5 1/2
FA-215	2–3	1	3/16–1/4	5 1/2
FA-218	2–3	1	3/16–1/4	5 1/2

①—Model is given on aluminized paper plate glued in truck cab.
②—Emeryville models 1/2–1 1/2° pos.
③—Emeryville models 1/16–1/8″.
④—Center point steering 1/2–2° neg.

PISTON, PIN, RING, CRANKSHAFT & BEARING SPECIFICATIONS

Year	Engine Model	Wristpin Diameter	Piston Clearance, Inch ⑤	Ring End Gap, In. (Minimum) Comp.	Ring End Gap, In. (Minimum) Oil	Crank Pin Diameter, Inch	Rod Bearing Clearance, In.	Main Bearing Journal Diameter, In.	Main Bearing Clearance, Inch	Thrust On Bearing No.	Shaft End Play
1961–62	4-152	1.0624	.0035	.010	⑥	2.373–2.374	.0011–.0032	2.7484–2.7494	.001–.004	3	.001–.005
1959–60	A-55	.6870	.001	.008	.008	1.8759–1.8764	.001–.0025	2.0000–2.0005	.0005–.002	2	.002–.003
1955–57	BD-220	.875	③	.016⑦	①⑦	2.373–2.374	.0011–.0032	2.748–2.749	.0012–.0042	3	.005–.010
1957–63	BD-220	.875	③	.020⑧	⑥⑧	2.373–2.374	.0011–.0032	2.748–2.749	.0012–.0042	3	.005–.010
1955–57	BD-240	.875	③	.016⑨	①⑨	2.373–2.374	.0011–.0032	2.748–2.749	.0012–.0042	3	.005–.010
1957–63	BD-240	.875	③	.020⑩	⑥⑩	2.373–2.374	.0011–.0032	2.748–2.749	.0012–.0042	3	.005–.010
1955–57	BD-264	.875	③	.015⑪	①⑪	2.373–2.374	.0011–.0032	2.748–2.749	.0012–.0042	3	.005–.010
1957–63	BD-264	.875	③	.020⑫	⑥⑫	2.373–2.374	.0011–.0032	2.748–2.749	.0012–.0042	3	.005–.010
1952–56	BD-269	.919	.003	.016	①	2.122–2.123	.0007–.0032	2.7005–2.7015	.0013–.0043	4	.0055–.0145
1953–63	BD-282	.919	②	⑬	⑮	2.122–2.123	.0007–.0032	2.7005–2.7015	.0013–.0043	4	.0055–.0145
1955–63	BD-308	.919	②	⑬	⑮	2.122–2.123	.0007–.0032	2.7005–2.7015	.0013–.0043	4	.0055–.0145
1952–63	RD-372	1.109	⑭	.025	⑯	2.751–2.752	.0012–.0037	3.2495–3.2505	.0013–.0043	7	.006–.015
1952–63	RD-406	1.109	⑭	.025	⑯	2.751–2.752	.0012–.0037	3.2495–3.2505	.0013–.0043	7	.006–.015
1952–63	RD-450	1.109	④	.025	⑯	2.751–2.752	.0012–.0037	3.2495–3.2505	.0013–.0043	7	.006–.015
1955–63	RD-501	1.109	④	.020	⑯	2.751–2.752	.0012–.0037	3.2495–3.2505	.0013–.0043	7	.006–.015
1952–55	SD-220	.875	.003	.016	①	2.373–2.374	.0011–.0032	2.748–2.749	.001–.004	3	.005–.010
1952–55	SD-240	.875	.003	.016	①	2.373–2.374	.0011–.0032	2.748–2.749	.001–.004	3	.005–.010
1959–63	V-266	1.0624	.0035	.010	⑥	2.373–2.374	.0011–.0033	2.7484–2.7494	.001–.004	3	.001–.005
1959–63	V-304	1.0624	.0035	.010	⑥	2.373–2.374	.0011–.0033	2.7484–2.7494	.001–.004	3	.001–.005

PISTON, PIN, RING, CRANKSHAFT & BEARING SPECIFICATIONS continued

Year	Engine Model	Wristpin Diameter	Piston Clearance Inch ⑤	Ring End Gap, In. (Minimum) Comp.	Ring End Gap, In. (Minimum) Oil	Crank Pin Diameter, Inch	Rod Bearing Clearance, In.	Main Bearing Journal Diameter, In.	Main Bearing Clearance, Inch	Thrust On Bearing No.	Shaft End Play
1959-63	V-345	1.0624	.0035	.010	⑥	2.373-2.374	.0011-.0033	2.7484-2.7494	.001-.004	3	.001-.005
1956-63	V-401	1.312	.0035	.013	①	2.623-2.624	.0017-.0042	3.123-3.124	.0014-.0044	3	.004-.009
1956-63	V-461	1.312	.0035	.013	①	2.623-2.624	.0017-.0042	3.123-3.124	.0014-.0044	3	.004-.009
1956-63	V-549	1.312	.0035	.013	①	2.623-2.624	.0017-.0042	3.123-3.124	.0014-.0044	3	.004-.009

①—U-Flex ring - no clearance. Chrome face type .013″.
②—Top of skirt .0035, bottom of skirt .0025.
③—Top of skirt .003, bottom of skirt .002.
④—Top of skirt .004, bottom of skirt .003.
⑤—Pistons removed from above.
⑥—No gap at ring joint. Steel rail gap .015″.
⑦—Below Engine No. 456764.
⑧—Starting with Engine No. 456764 in 1957.
⑨—Below Engine No. 456787.
⑩—Starting with Engine No. 456787 in 1957.
⑪—Below Engine No. 457308.
⑫—Starting with Engine No. 457308 in 1957.
⑬—Below Engine No. 170020, .010″. Starting with Engine No. 170020, .015″.
⑭—Below Engine No. 156343; top of skirt .005″, bottom of skirt .003″. Starting with Engine No. 156343; top of skirt .0045″, bottom of skirt .002″.
⑮—Below Engine No. 170020, see ①. Starting with Engine No. 170020, .010″.
⑯—Below Engine No. 156343, see ①. Starting with Engine No. 156343, .013″.

GENERATOR & REGULATOR SPECIFICATIONS

★To polarize generator, connect jumper wire from "hot" side of battery to armature terminal of generator.

Generator						Regulator					
Gen. No. ①	Rotation and Ground Polarity ③	Brush Spring Tension, Oz.	Rated Cap. Amps.	Gen. Field Ground Location★	Field Current	Reg. No. ①	Cutout Relay: Closing Voltage	Cutout Relay: Arm. Air Gap, In.	Voltage Setting	Current Setting	Current & Voltage Regulator Armature Air Gap, Inch
1100031	C-P	28	40	External	1.87-2.00	1118830	6.4	.020	7.2	40	.075
1100337	C-N	28	25	External	1.50-1.62	1119000	12.2	.020	14.5	25	.075
1102005	C-P	28	30	External	1.48-1.62	1118839	12.2	.020	14.5	30	.075
1102034	C-N	28	30	External	1.48-1.62	1119001	12.6	.020	14.3	30	.075
1102044	C-N	28	30	External	1.48-1.62	1119003	12.2	.020	14.5	30	.075
1102169	C-N	28	20	External	1.62-1.82	1119245	12.6	.020	14.3	23	.075
1102182	C-N	28	20	External	1.62-1.82	1119245	12.6	.020	14.3	23	.075
1102191	C-N	28	30	External	1.69-1.79	1119001	12.6	.020	14.3	30	.075
1102785	C-P	28	45	External	1.87-2.00	1118828	6.3	.020	7.2	45	.075
1105008	C-P	28	50	External	1.77-1.93	1118838	12.2	.020	14.2	50	.075
1105009	C-P	28	40	External	1.77-1.93	1118886	12.2	.020	14.5	40	.075
1105876	C-N	28	25	External	1.62-1.82	1119000	12.2	.020	14.5	25	.075
1105941	C-N	28	20	External	1.54-1.67	1118902	12.2	.020	14.5	20	.075
1105946	C-N	28	25	External	1.54-1.67	1119000	12.2	.020	14.5	25	.075
1106757	C-P	20	55	External	1.70-1.95	1118832	6.3	.020	7.2	55	.075
1106758	C-P	20	45	External	1.70-1.95	1118834	6.3	.020	7.2	45	.075
1106805	CC-P	20	50	External	1.37-1.50	1118880	12.2	.020	14.2	50	.075
1106821	C-P	20	40	External	1.37-1.50	1118886	12.2	.020	14.5	40	.075
1106822	C-N	20	50	External	1.37-1.50	1119156	12.2	.020	14.2	50	.075
1106822	C-N	20	50	External	1.37-1.50	1118881	12.6	.020	14.2	50	.075
1106822	C-P	20	50	External	1.37-1.50	1118838	12.6	.020	14.2	50	.075
1106826	C-P	20	50	External	1.37-1.50	1118838	12.6	.020	14.2	50	.075
1106909	CC-P	20	50	External	1.37-1.50	1118854	6.3	.020	7.2	50	.075
1106913	C-P	20	50	External	1.37-1.50	1118854	6.3	.020	7.2	50	.075
1106976	C-P	28	55	External	1.70-1.95	1118947	6.1	.020	7.0	55	②
1106986	C-N	20	50	External	2.14-2.28	1119606	12.4	.020	14.2	50	⑤
1106987	C-N	28	35	External	2.14-2.28	1119611	12.2	.020	14.3	35	④

① Stamped on plate riveted to housing or regulator base.
② Current regulator air gap .075″, voltage regulator gap .063″.
③ C—Clockwise. CC—Counterclockwise. N—Negative. P—Positive.
④ Current regulator air gap .075″, voltage regulator gap .080″.
⑤ Current regulator air gap .075″, voltage regulator gap .067″.

STARTING MOTOR SPECIFICATIONS

Unit Part No. ①	Rotation ②	Brush Spring Tension, Ounces	No Load Test			Torque Test		
			Amperes	Volts	R. P. M.	Amperes	Volts	Torque Lb. Ft.
1107140	C	24 Min.	70	5.65	5500	550	3.25	11
1107153	C	24 Min.	70	5.65	5500	550	3.25	11
1107156	C	24 Min.	70	5.65	5500	550	3.25	11
1107168	C	24	80	5.6	5500	550	3.3	11
1107218	C	35	91	10.6	3240	395③	3.5③	
1107220	C	35	100	10.6	5100	360③	3.5③	
1107678	C	35 Min.	75	10.3	6900	435	5.8	10.5
1107679	C	40 Min.	100	10.6	5100	360	3.5	
1107680	C	40 Min.	100	10.6	5100	360	3.5	
1107689	C	35 Min.	112	10.6	3240	320	3.5	
1107709	C	35 Min.	49 Min.	10.6	6200 Min.	270 Min.	4.25	
1107710	C	35 Min.	65 Min.	10.6	3600 Min.	300 Min.	3.5	
1107742	CC	35	95	10.6	6000	360③	3.5③	
1107967	C	24 Min.	70	5.65	5500	570	3.15	13.5
1107985	C	24 Min.	80	5.67	5500	600	3.0	14
1108009	C	24 Min.	70	5.65	5500	570	3.15	13.5
1108033	C	24 Min.	80	5.67	5500	600	3.0	14
1108042	C	24 Min.	80	5.67	5500	600	3.0	14
1108051	C	24 Min.	80	5.67	5500	600	3.0	14
1108130	CC	24 Min.	70	11.3	6000	530	6.7	16
1108142	C	24 Min.	70	11.3	6000	530	6.7	16
1108153	C	24 Min.	70	11.3	6000	530	6.7	16
1108157	C	24 Min.	70	11.3	6000	530	6.7	16
1108161	C	24 Min.	70	11.3	6000	530	6.7	16
1108220	C	24 Min.	70	5.0	3500	600	3.0	22
1108221	C	24 Min.	70	5.0	3500	600	3.0	22
1108233	C	24	35	23.5	2500	265	19.1	19
1108238	C	35	72.5	23.5	3650	435③	15③	
1108813	C	36–40	115	11.6	7000	570	2.3	20
1108840	C	36–40	115	11.6	7000	570	2.3	20
1108848	C	36–40	115	11.6	7000	570	2.3	20
1108863	C	36–40	100	23.0	8000	525	3.0	32
1108871	C	36–40	100	23.0	8000	525	3.0	32
1109005	C	36–40	75	11.25	2400	700	5.0	51
1109009	C	36–40	70	5.7	2200	600	3.0	35
1109012	C	36–40	75	11.25	2400	700	5.0	51
1109015	C	36–40	70	5.7	2200	600	3.0	35
1109018	C	24 Min.	70	5.65	5500	570	3.15	13.5
1108312	C	35	80	10.6	10500	320③	4.0③	
1109715	C	36–40	100	23.0	8000	525	3.0	32
1109930	C	24 Min.	35	23.5	2500	265	19.1	19
1109941	C	24 Min.	35	23.5	2500	265	19.1	19
1113001	C	28–36	50	11.5	8000	500	3.25	22
1113039	C	28–36	50	5.7	5000	500	3.0	21
1113040	C	28–36	50	11.5	8000	500	3.25	22
1113070	C	48 Min.	50	11.5	6000	500	3.3	22
1113081	C	48 Min.	50	11.5	6000	500	3.3	22
1113098	C	48	70	11.5	7400	500	3.4	22
1113108	C	28	40	23.5	6800	250	8.0	19.5
1113109	C	28	40	23.5	6800	250	8.0	19.5
1113336	C	48 Min.	30	23.4	6000	200	6.6	20
1113456	C	28–36	50	11.5	3600	500	3.25	34
1113458	C	28–36	50	5.7	2300	500	3.0	31
1113460	C	36	35	23.5	3500	200	6.6	28
1113708	C	80	90	23.0	10700	500	3.5	26
1113709	C	80	90	23.0	10700	500	3.5	26
1113781	C	35 Min.	100	23.0	8000	500	3.0	28
1113823	C	35 Min.	100	23.0	8000	500	3.0	28
1114000	C	35 Min.	105	11.5	6000	600	2.3	19
1114089	C	80	115	11.5	7600	600	2.5	16.5

① Stamped on name plate riveted to housing. ② C—Clockwise. CC—Counterclockwise. As viewed from drive end. ③—Resistance Test.

DISTRIBUTOR SPECIFICATIONS

Unit Part No. ①	Rotation ②	Cam Angle, Degrees	Breaker Gap, In.	Condenser Capacity, Mfds.	Breaker Arm Spring Tension, Oz. ③	Centrifugal Advance Data Degrees @ R.P.M. of Dist.		Vacuum Advance Data		
						Advance Starts	Full Advance	Inches of Vacuum to Start Plunger Movement	Inches of Vacuum for Full Plunger Travel	Maximum Vacuum Advance, Dist. Degrees
1110266	C	74–76	.016	.20–.25	17–21	1 @ 350	14 @ 2100	3–5	9.5	7
1111563	C	31–37	.022	.20–.25	17–21	1 @ 300	14 @ 1350	None	None	None
1111564	CC	31–37	.022	.20–.25	17–21	1 @ 300	11 @ 1600	None	None	None
1111574	CC	31–37	.022	.20–.25	17–21	1 @ 250	15 @ 1500	None	None	None
1111813	C	31–37	.022	.20–.25	17–21	1 @ 300	11 @ 1600	None	None	None
1111868	C	31–37	.022	.20–.25	17–21	1 @ 300	11 @ 1600	None	None	None
1112276	C	31–37	.022	.20–.25	17–21	1 @ 300	14 @ 1350	None	None	None
1112279	C	31–37	.022	.20–.25	17–21	1 @ 300	14 @ 1350	None	None	None
1112288	C	31–37	.022	.20–.25	17–21	1 @ 300	14 @ 1350	None	None	None
1112293	C	31–37	.022	.20–.25	17–21	1 @ 300	14 @ 1350	None	None	None
1112302	C	31–37	.022	.20–.25	17–21	1 @ 300	14 @ 1350	None	None	None
1112308	C	31–37	.022	.20–.25	17–21	1 @ 300	14 @ 1350	None	None	None
1112309	C	31–37	.022	.20–.25	17–21	1 @ 300	14 @ 1350	None	None	None
1112321	C	31–37	.022	.20–.25	17–21	1 @ 300	14 @ 1350	None	None	None
1112322	C	31–37	.022	.20–.25	17–21	1 @ 250	10 @ 900	None	None	None
1112324	C	31–37	.022	.20–.25	17–21	1 @ 250	10 @ 900	None	None	None
1112338	C	31–37	.022	.20–.25	17–21	1 @ 300	14 @ 1350	None	None	None
1112342	C	31–37	.022	.20–.25	17–21	1 @ 300	14 @ 1350	None	None	None
1112355	CC	31–37	.022	.20–.25	17–21	1 @ 250	15 @ 1500	3–5	14	7.5
1112357	C	31–37	.022	.20–.25	17–21	1 @ 300	11 @ 1600	7–8.5	18.5	10
1112359	C	31–37	.022	.20–.25	17–21	1 @ 300	14 @ 1350	None	None	None
1112366	C	31–37	.022	.20–.25	17–21	1 @ 300	14 @ 1350	None	None	None
1112368	CC	31–37	.022	.20–.25	17–21	1 @ 250	15 @ 1500	3–5	14	7.5
1112370	C	31–37	.022	.20–.25	17–21	1 @ 300	11 @ 1600	None	None	None
1112371	C	31–37	.022	.20–.25	17–21	1 @ 300	14 @ 1350	None	None	None
1112376	C	31–37	.022	.20–.25	17–21	1 @ 300	11 @ 1600	None	None	None
1112377	C	31–37	.022	.20–.25	17–21	1 @ 300	14 @ 1350	None	None	None
1112394	CC	31–37	.022	.20–.25	17–21	1 @ 250	15 @ 1500	None	None	None
1112397	CC	31–37	.022	.20–.25	17–21	1 @ 225	14 @ 1050	None	None	None
1112398	C	31–37	.022	.20–.25	17–21	1 @ 250	10 @ 900	None	None	None
1112406	C	31–37	.022	.20–.25	17–21	1 @ 300	14 @ 1350	None	None	None
1112410	C	31–37	.022	.20–.25	17–21	1 @ 300	14 @ 1350	None	None	None
1112412	C	31–37	.022	.20–.25	17–21	1 @ 300	11 @ 1600	None	None	None
1112416	CC	31–37	.022	.20–.25	17–21	1½ @ 300	12 @ 1100	None	None	None
1112417	C	31–37	.022	.20–.25	17–21	1 @ 300	14 @ 1350	None	None	None
1112422	CC	28–35	.016	.20–.25	17–21	2 @ 300	12 @ 1100	None	None	None
1112423	C	28–35	.016	.20–.25	17–21	1 @ 300	11 @ 1600	None	None	None
1112424	C	28–35	.016	.20–.25	17–21	1 @ 225	14 @ 1050	None	None	None
1112425	C	28–35	.016	.20–.25	17–21	1 @ 350	14 @ 1350	None	None	None
1112429	C	28–35	.016	.20–.25	17–21	1 @ 300	11 @ 1600	None	None	None
1112430	C	31–37	.022	.20–.25	17–21	1 @ 300	11 @ 1600	None	None	None
1112440	CC	28–35	.016	.20–.25	17–21	1 @ 225	14 @ 1050	None	None	None
1112441	C	28–35	.016	.20–.25	17–21	1 @ 300	11 @ 1600	None	None	None
1112704	C	28–35	.016	.20–.25	17–21	1 @ 300	14 @ 1350	None	None	None
1112705	C	28–35	.016	.20–.25	17–21	1 @ 300	11 @ 1600	None	None	None
1112706	C	28–35	.016	.20–.25	17–21	1 @ 300	11 @ 1600	None	None	None
1112713	C	28–35	.016	.20–.25	17–21	1 @ 350	14 @ 1350	None	None	None
1112714	C	28–35	.016	.20–.25	17–21	1 @ 350	14 @ 1350	None	None	None
1112730	C	28–35	.016	.20–.25	17–21	1 @ 350	14 @ 1350	None	None	None

① Stamped on plate riveted to housing. ② Viewed from top. ③ Measured from center of contact.

Engine Section

ENGINE, REPLACE

LPG Warning

If the truck is equipped with LPG fuel system, be sure that the tank valves are tightly closed and all fuel exhausted from the lines before starting any repair work on the fuel system.

Any trucks of this type which have been involved in an accident should not be brought into the shop for repair until the tanks and system is checked for possible leaks.

V8 Engines

The engine is removed as an assembly complete with accessories, less the carburetor air cleaner. The transmission is separated from the engine at the flywheel housing. Drain the cooling system; drain points are located one on each side and toward the front of the cylinder block and the lower left of the radiator. Drain engine oil. Disconnect battery ground cable and tape the end of the terminal to avoid accidental grounding.

On V8-401, 461, 549, tapped holes at the rear of the intake manifold and engine front cover are provided for lifting eye bolts.

On V8-266, 304, 345, the engine lifting fixture can be attached to the intake manifold by utilizing the carburetor mounting capscrews with flat washers. *When installing the lifting fixture, the capscrews are to be installed finger tight; then tighten the capscrews one-half additional turn.*

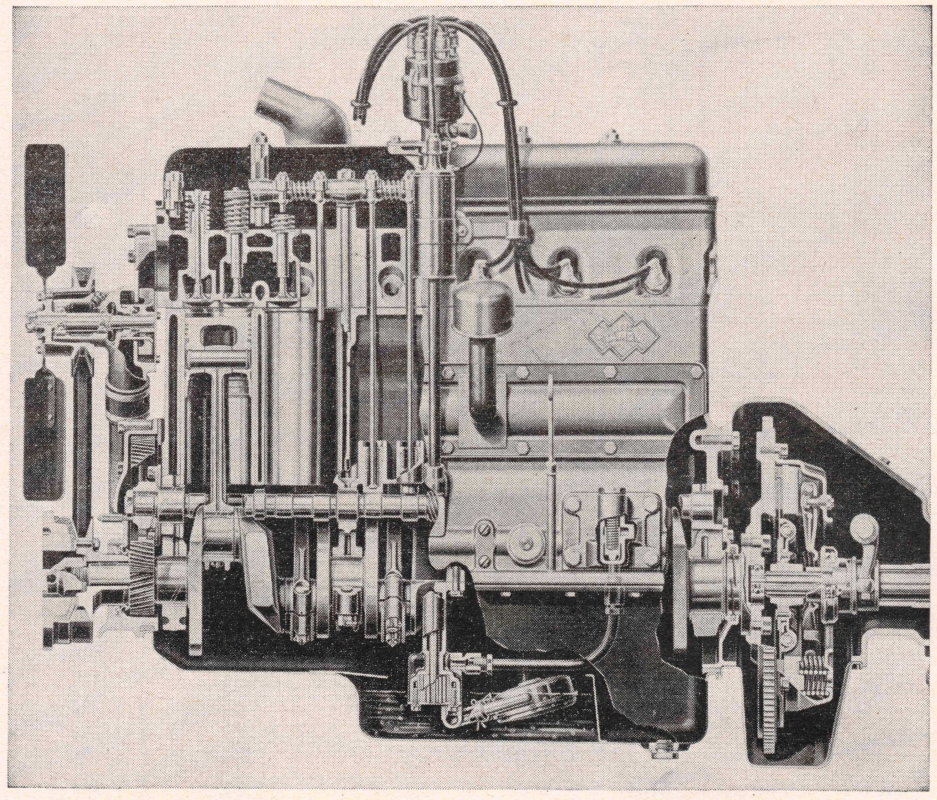

BD-269, 282, 308. Dry-Type cylinder liners used in 269 engine only

4-152 Engine

1. Drain cooling system, crankcase and disconnect battery ground cable.
2. Remove fan blade, radiator, and other parts such as radiator cross braces, heater air ducts, etc., which may interfere with engine removal.
3. Remove carburetor and engine wiring.
4. Remove fuel line from pump.
5. Disconnect exhaust pipe from manifold.
6. Install lifting fixture on engine.
7. Hoist engine enough to support it while disconnecting engine front mountings.
8. Separate engine from transmission by separating transmission from flywheel housing or flywheel housing from rear of engine.
9. Pull engine forward to clear clutch from transmission main drive gear shaft. Then tilt engine upward and remove from chassis.

A-55 Engine

To remove the engine the transmission must first be removed since the engine rear support is dependent on the transmission.

1. Place truck front end on floor jacks and remove floor panel directly over transmission.
2. Drain cooling system, disconnect both battery cables, remove radiator and heater hoses, wiring harness from engine, and engine ground strap.
3. Disconnect throttle lever and choke control from carburetor, and fuel inlet line to fuel pump.
4. Disconnect exhaust pipe from manifold.
5. Remove gearshift control rods from transmission. *It will not be necessary to disconnect fluid line from clutch operating slave cylinder if slave cylinder itself is removed from clutch operating lever on side of transmission.*
6. Disconnect speedometer cable from transmission, and forward end of propeller shaft.
7. If one is available, extend boom of floor crane through right side door of truck and fasten chain sling to bolts on top of cylinder head (air cleaner must first be removed). Adjust crane to support engine weight.
8. Place jack under transmission and remove transmission crossmember.
9. Unfasten transmission housing from engine rear plate and remove transmission from chassis.
10. Unfasten engine from front mounting brackets (8 bolts) and take engine out through side door.
11. Installation is made by reversing the removal procedure.

BD & SD Engines

After removing the transmission, the engine can be lifted from the chassis without disturbing the fender and grille assembly by using a suitable chain sling and floor crane.

1. Drain engine oil and cooling system.
2. Disconnect upper and lower hoses.
3. Remove air cleaner and disconnect vacuum pipe from manifold.
4. Disconnect coil wire, starter cable, engine ground strap, and instrument sender unit wires.
5. Disconnect fuel line at fuel pump.
6. Disconnect throttle control linkage and remove choke wire at carburetor.
7. Disconnect clutch linkage at bell housing.
8. Remove engine rear mounting bolts from both sides of engine support pads.
9. Remove engine front mounting bolts from support bracket (these are the bolts at the front cross member). The engine front bracket is removed with the engine.
10. Unfasten radiator from its mounting and lift out radiator and its support.
11. Disconnect exhaust pipe at manifold.

12. Remove engine from chassis.
13. Replace in reverse order of removal.

RD Engines

1. Drain engine oil and cooling system.
2. Disconnect upper and lower hoses.
3. Remove air cleaner.
4. Disconnect vacuum line at manifold or air line at compressor when equipped with air brakes.
5. Disconnect coil wire, starter cable, engine ground strap and instrument sender unit wires.
6. Disconnect fuel line at fuel pump.
7. Disconnect throttle control linkage and remove choke wire at carburetor.
8. Remove hood and floor boards.
9. Remove fenders and grille as a unit.
10. Unfasten and remove radiator and its support.
11. Remove engine front mounting bolts from support bracket. These are the bolts at the front cross member.
12. Support transmission with floor jack or blocking. Then remove cap screws from around bell housing.
13. Disconnect exhaust pipe from manifold.
14. Attach engine sling to front and rear right side cylinder head bolts and remove engine from chassis.
15. Reverse the foregoing to install.

CYLINDER HEAD, REPLACE

All Engines

Cylinder heads should be tightened down by starting from the center, working outward from side to side and to the ends in the sequence shown in Figs. 1 to 6. Draw the bolts down evenly, repeating the operation until all are normally tight. After running the engine to warm it up thoroughly, a final tightening should be made with a torque wrench to the torque load listed in the *Tune Up & Valve Specifications* table.

ROCKER ARM SERVICE

4-152 Engine

As shown in Fig. 6A, the rocker arm assembly consists of the shaft, shaft supports, rocker arms and spacers. The rocker arms are lubricated by oil supplied to the hollow shaft through an oil passage in one of the supports.

Formation of sludge in the oil passages of the rocker arms and shaft will restrict flow of oil to the rocker arm bushings and valves. Therefore, each time the assembly is removed, it should be disassembled and cleaned thoroughly.

When disassembling, keep parts in order to assure reassembly in their original position if in satisfactory condition.

If necessary to remove plugs from each end of shaft, drill or pierce one plug, then knock out the opposite plug with a steel rod. Working from other end, knock out other plug.

When reassembling, lubricate rocker arm bushings with engine oil. Make sure the notches at ends of rocker arm shaft are up. Be sure to position the rocker arm support having the oil feed hole so that the oil hole will index with the oil feed hole in the cylinder head (third from rear, Fig. 6B).

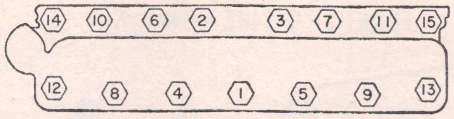

Fig. 1 Cylinder head tightening sequence. BD 220, 240, 264 and SD engines

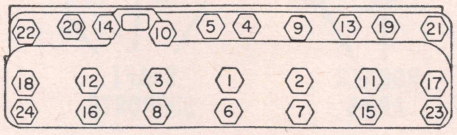

Fig. 2 Cylinder head tightening sequence. BD 269, 282, 308 engines

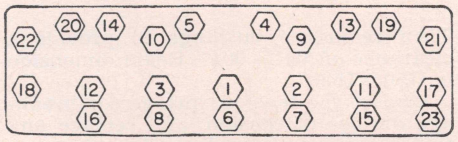

Fig. 3 Cylinder head tightenening sequence. RD engines

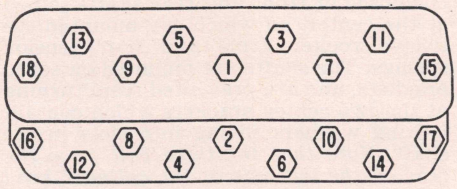

Fig. 4 Cylinder head tightening sequence. V-401, 461, 549

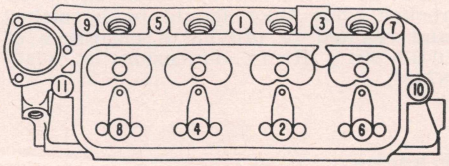

Fig. 5 Cylinder head tightening sequence. A-55 engine

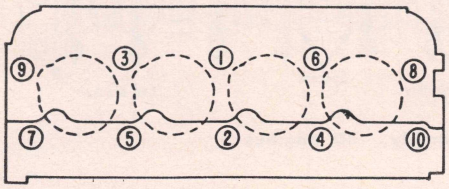

Fig. 6 Cylinder head tightening sequence. 4-152, V-266, 304, 345

Service Note

Before installing push rods in 4-152 engines, rotate the crankshaft to position the crankshaft pulley hub as shown in Fig. 6B. This is to prevent possible damage to engine parts if the hydraulic lifters have not leaked down to operating position.

A-55 Engine

When servicing the rocker arm assembly, clean the shaft thoroughly and blow out all oil passages. Remove threaded plug from end of shaft.

Inspect shaft, rocker arms and bushings for wear. Replacement bushings are available for rocker arms.

Install shaft plug, rocker arms, brackets and springs in their original positions on the shaft. Lock the shaft in position with set screw. Install plain washers, spring washers and cotter pins at each end of shaft. Coat complete assembly with engine oil.

V-266, 304, 345 Engines

When assembling the rocker arms, Fig. 7, make sure the notches at the end of the rocker arm shaft are facing upward. Also make sure the rocker arm shaft support incorporating the oil feed hole is located *third from rear on right bank and third from front on left bank.*

Rocker arm shaft assemblies are interchangeable from one bank to another. Make sure rocker arms are correctly positioned to actuate the valves. Check all push rods for straightness by rolling on a flat surface. Replace any that are bent or have loose ends.

V-401, 461, 549 Engines

The rocker arm assemblies, Fig. 8, are removed from the engine as a unit. After removing the hair pin retaining rings and spring washers from the ends of the shaft, the shafts may be stripped of arms, springs and supports. Keep parts in order so they may be replaced in their original position if in satisfactory condition. Remove plugs from ends of shafts and clean all parts thoroughly, making sure all oil passages are open.

When assembling, make sure rocker arms are correctly positioned to actuate the valves. Be sure the rocker arm end supports incorporate the dowel sleeves for alignment to cylinder head.

BD Engines

The rocker arm assembly, Fig. 9, is composed of front and rear shafts joined at the center, on which are mounted twelve rocker arms and six tension springs. The shafts are mounted on seven brackets, and are prevented from turning at the two end brackets by slots in the shaft into which the cylinder head bolts fit. *Note that the left front head bolt is drilled just above the thread with an oil hole which supplies oil to the rocker arms.*

Separate the shafts and slide rocker arms, springs and brackets from the shafts. Clean all sludge and carbon deposits from the oil holes and slots.

Inspect the valve stem contact pad surface of the rocker arm and resurface if wear is perceptible. Do not remove more than .010" of material when resurfacing.

If new bushings are required in the rocker arms, press them in and burnish them into place with a burnishing tool.

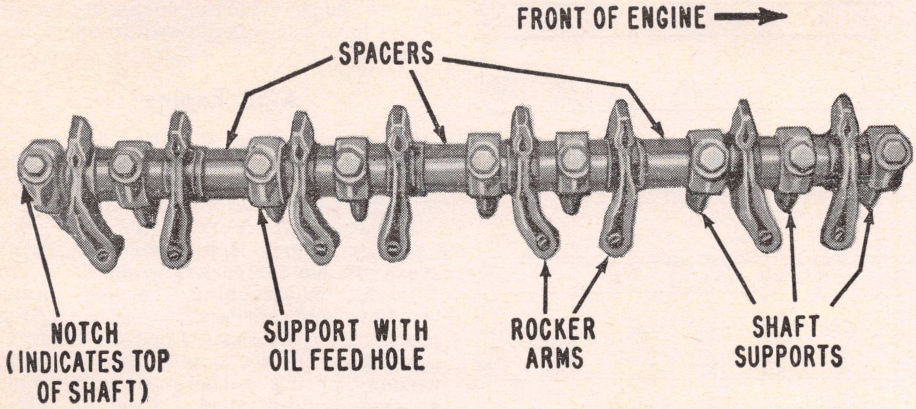

Fig. 6A Rocker arm assembly on 4-152 engine

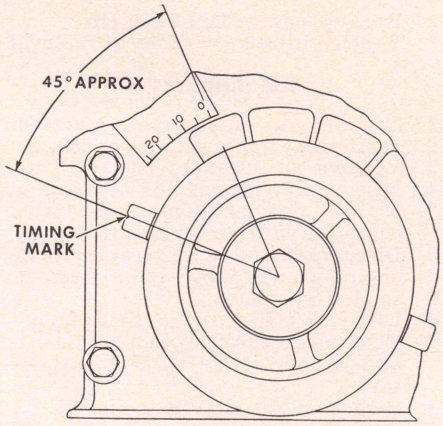

Fig. 6B Correct position of crankshaft pulley when installing push rod on 4-152 engine

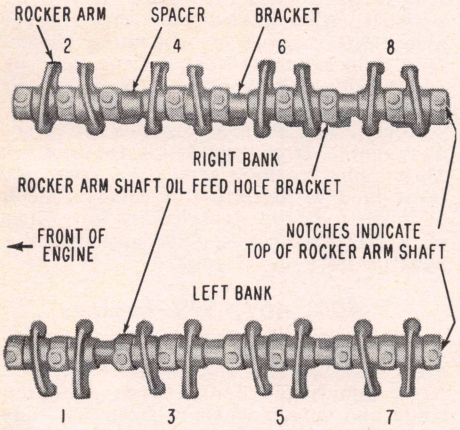

Fig. 7 Rocker arm assemblies. V-266, 304, 345

Then ream the bushings to provide a clearance of .0015-.004". Ream dimension is .7505-.7520".

Inspect the tension springs for breakage or loss of tension, and replace any that show damage or loss of tension.

RD Engines

The rocker arm assembly, Fig. 10, is composed of front and rear shafts joined at the center, on which are mounted the twelve rocker arms and four tension springs. The shafts are mounted on seven brackets, and are prevented from turning at the two center brackets which contain locking washers fitting into slots in the shaft. *Note that the third bolt from the rear on the left side of the cylinder head is drilled with an oil hole which supplies oil to the rocker arms.*

Inspect the component parts of the assembly as outlined for BD engines. And when new bushings are installed in the rocker arms they should be burnished and reamed to provide a clearance of .0015-.004". Ream dimension is .8745-8760".

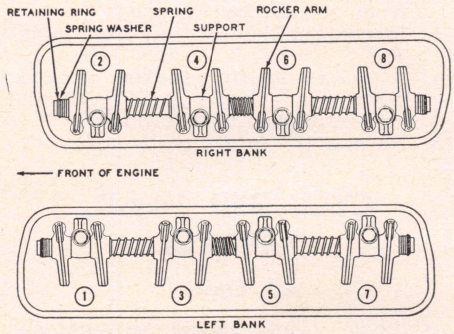

Fig. 8 Installation of rocker arms. V-401, 461, 549

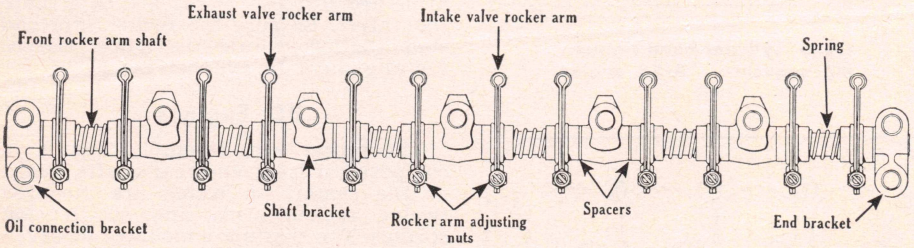

Fig. 9 Rocker arm assembly. BD engines

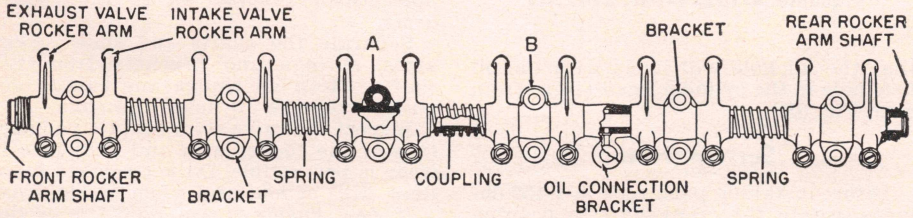

Fig. 10 Rocker arm assembly. RD engines

SD Engines

The rocker arm assembly is composed of front and rear shafts joined at the center, on which are mounted twelve rocker arms and six tension springs. The shafts are mounted in seven brackets, and are prevented from turning at the two end brackets by slots in the shaft into which the cylinder head bolts fit.

Number two, four and six rocker arm brackets have sleeve dowels which keep the rocker arm assembly aligned, Fig. 11. These three hold-down brackets are reamed from the bottom side so that the sleeve dowels will fit .0015-0035" tight in the brackets. The remaining half of the dowel is fitted .0025-.0055" loose in the cylinder head.

Inspect the component parts of the assembly as outlined for BD engines. If rocker arm bushing clearance exceeds .004", press in, burnish and ream new bushings to provide .0015-004" clearance.

VALVES, ADJUST

A-55 and 6-Cyl. Engines

To adjust valve lash, each cylinder must be brought up to top dead center on its compression stroke when adjusting valves for that cylinder. To deter-

mine the correct position, turn the engine crankshaft until No. 1 piston is at top dead center on its compression stroke and stop when the ignition mark on crankshaft pulley or flywheel is in line with the pointer on the timing case cover or flywheel housing. (Flywheel on SD, pulley on all others).

Adjust each valve to the clearance given in the *Tune Up & Valve Specifications* table and then, turning over the engine according to its firing order progressively, adjust the remaining valves.

After the engine has run long enough to bring it to operating temperature, recheck and, if necessary, adjust the clearances.

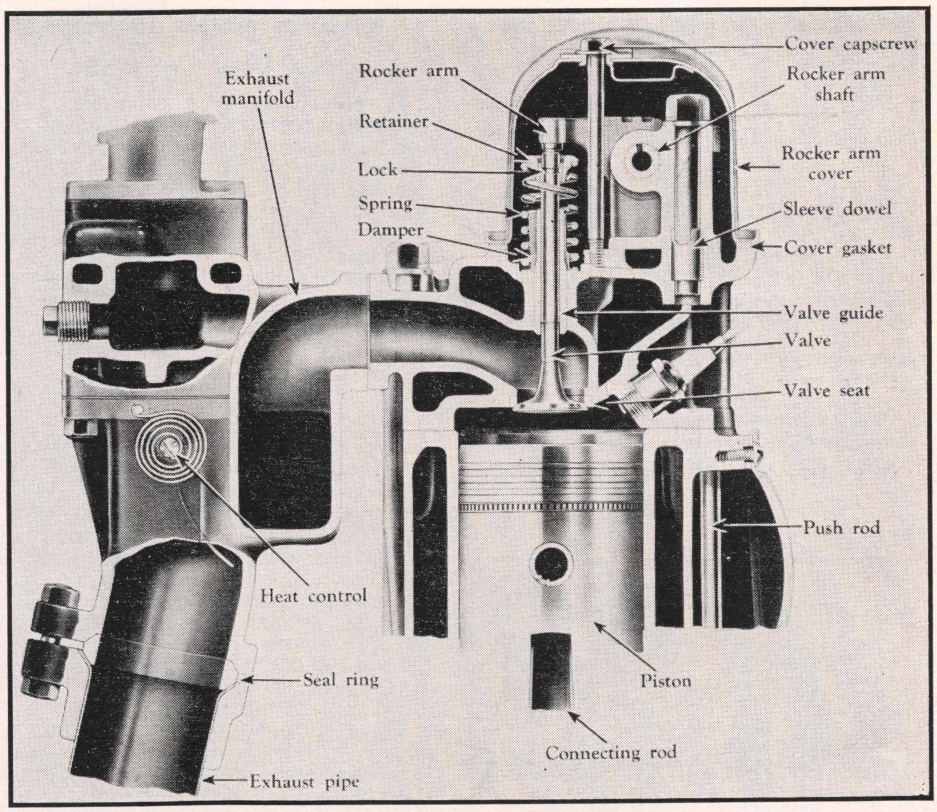

Fig. 11 Details of valve mechanism. SD engines

VALVES, REMOVE

All Engines

After removing the cylinder head and rocker arm assembly, use a suitable spring compressor to compress the springs. Remove the valve locks and springs. Check the keeper grooves in the valve stems for burrs and remove any burrs with a file to prevent scoring of valve guides. Remove the valves and place them in a board with numbered holes so they can be replaced in the same valve port from which they were removed.

VALVES, GRIND

All Engines

Fig. 12 illustrates the recommended valve seats to be obtained. The intake seats may be narrower than the exhaust because they are usually larger in diameter, thus providing a total seat area approximately equal to smaller exhaust valve with the wider seat. Also the less severe heat conditions do not require as large a seat area for heat dissipation purposes.

There are also objections to an excessively wide seat. In city or light delivery service, a wide seat collects carbon and particles of dirt that will produce variations or loss of compression, resulting in poor idle and possibly a loss of general performance and economy.

A wide seat in severe service, operating in the presence of dirt or an excess of carbon, will produce a badly pitted seat which may be just as detrimental to valve life as a too narrow seat. Under these conditions, a seat width to the minimum limit would possibly be better. However, the source of trouble (dirt, carbon) should be eliminated, making it possible to retain the wider seat.

VALVE ROTATORS

SD & RD Engines

The parts involved in the rotating mechanism are special spring seat retainer, a pair of flat halfmoon keys, a close fitting cap located on the valve stem, and a specially constructed valve stem, Fig. 13.

In order to accommodate valve expansion, the valve lash must be maintained. When camshaft rotation causes this lash or clearance to be taken up, the cap on the valve stem causes the valve keys to lower the spring retainer, removing the load of the valve springs from the valve *before* the valve is raised from its seat. A clearance of .001-.005″ on SD and .002-.006″ on RD engines should be maintained between the end face of the valve stem and cap, Fig. 9. This is the distance the spring retainer is lowered *before* the valve is moved. The slow valve rotating motion is caused by vibration of the valve, the flowing of exhaust gases around the valve head, and a slight rotating motion imparted to the valve by the valve spring.

Whenever valve work is done, check the clearance, using the special gauge shown in Fig. 14. If there is no clearance, grind off the end of the valve stem. If the clearance is too great, grind off the open end of the valve cap.

4-152 Engine

Fig. 14A illustrates the valves and related parts. Note the "Roto Cap" used with the exhaust valve.

If the special gauge is not available, a check for clearance can be made by hold-

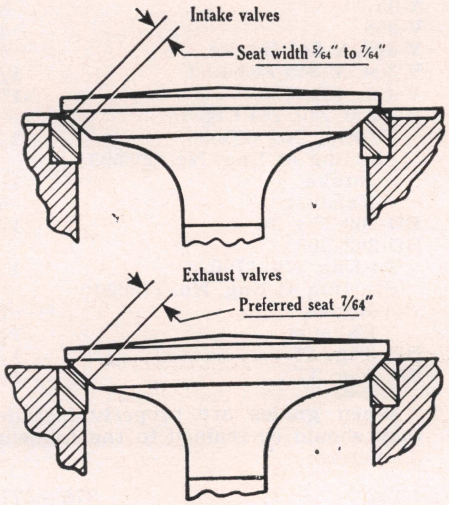

Fig. 12 Valve seat widths. All engines

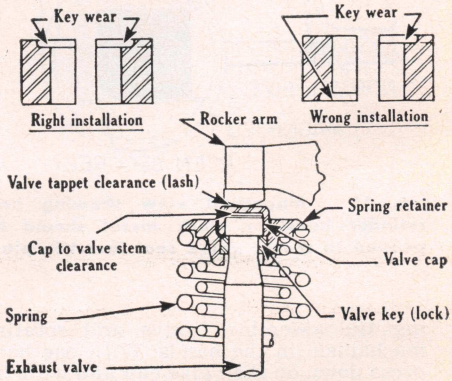

Fig. 13 Rotating exhaust valve mechanism. SD and RD engines

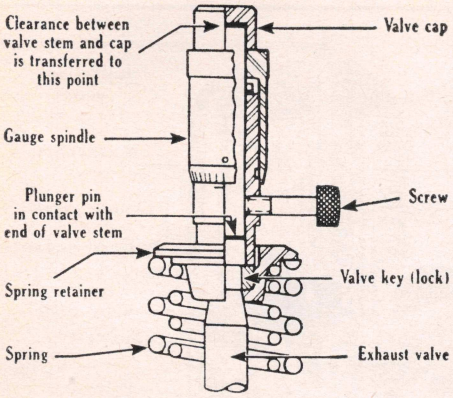

Fig. 14 Showing use of special gauge for checking clearance between valve stem and cap. SD and RD engines

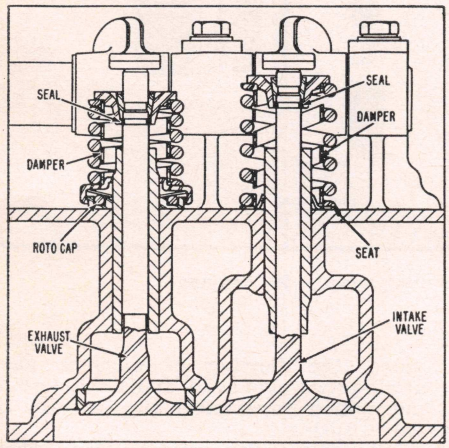

Fig. 14A Valves and related parts on 4-152 engine

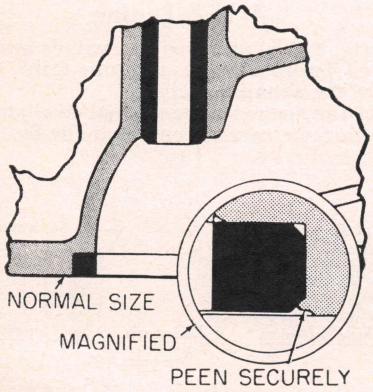

Fig. 15 Magnified view showing how cylinder head or block metal should be peened to secure valve seat insert in place

ing the assembled valve and rotating mechanism in the hands. With one hand press down on the valve cap and with the other hand turn the valve. If the valve turns readily at least it indicates that there is clearance present.

VALVE SEAT INSERTS

Not Used On A-55

If replacement of a valve seat insert becomes necessary, it is important that the new insert be securely peened in place, Fig. 15, using either an insert peening tool or a dull-pointed chisel, ¼″ wide, to peen the cylinder head or block metal over the outer edge of the valve seat insert.

Valve seat inserts supplied for service are standard size and .030″ oversize which permits a tight fit.

VALVE SPRINGS

Valve springs should be checked by measuring their free length, and the uniformity should not vary more than $\frac{1}{16}$″.

Each spring should also be checked for squareness. This can be done with a steel square and surface plate. Stand each spring and the square on end on the surface plate and slide the spring up to the straight edge of the square. Then gradually revolve the spring, while at the same time noticing the space between the top coil of the spring and the square. This space should not exceed $\frac{1}{16}$″; if more, replace the spring.

Valve springs should be checked for tension with a spring tester. Any spring that does not conform to the specifications listed in the chart within 10% should be replaced.

VALVE GUIDES, REPLACE

Clean valve guides with a suitable cleaning tool. Then check each valve guide with a "GO and NO-GO" gauge, if available; otherwise, use a new valve to check the fit. If the "NO-GO" portion of the gauge enters, the guide must be replaced.

Clearance in excess of .006″ for intake valves and .008″ for exhaust valves, calls for replacement of valve guides.

New guides should be installed so that the distance from the cylinder head to the top of the guide is as follows.

4-152 intake	$\frac{31}{32}$″
4-152 exhaust	$1\frac{3}{32}$″
A-55	⅝″
V-266	$\frac{31}{32}$″
V-304, V-345 Intake	$\frac{31}{32}$″
V-304, V-345 Exhaust	$1\frac{3}{32}$″
V-401, 461, 469	1″
BD-220, 240, 264 Fig. 16:	
To Eng. No. 605593	$1\frac{7}{32}$″
Starting at Eng. No. 605593:	
Intake	1⅛″
Exhaust	¾″
BD-269, Fig. 16	$1\frac{1}{16}$″
BD-282, 308:	
To Eng. No. 170020	$1\frac{1}{32}$″
Starting at Eng. No. 170020:	
Intake	$\frac{29}{32}$″
Exhaust	$1\frac{1}{32}$″
RD, Fig. 16	$1\frac{1}{16}$″
SD, Fig. 17	$1\frac{7}{32}$″

When guides are properly installed, they should be reamed to the following diameters:

4-152	.376 -.377
A-55	.344 -.345″
V-266, 304, 345	.374 -.3755″

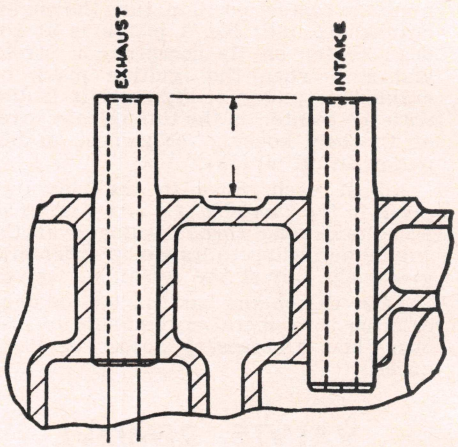

Fig. 16 Position of valve stem guides in BD and RD engines. See text for correct dimension

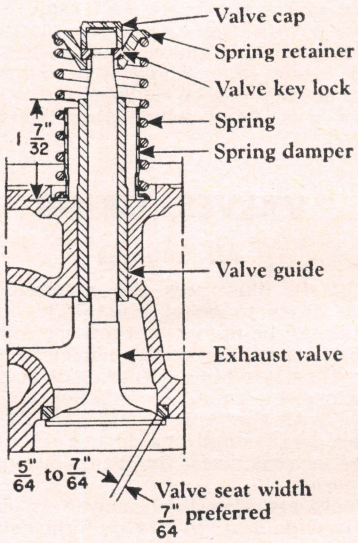

Fig. 17 Valve details. SD engines. Note dimension for installing valve guides

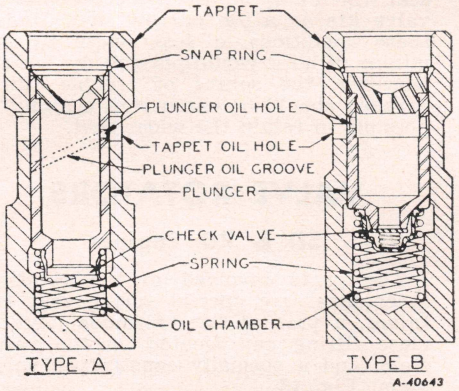

Fig. 18 Hydraulic valve lifters. V-401, 461, 549

V-401, 461, 549	.4365-.4380"
RD	.4365-.4380"
BD 220, 240, 264	.3735-.3755"
BD 269	.3435-.3455"
BD 282, 308	.3735-.3755"
SD	.3743-.3758"

VALVE LIFTERS

4-152 & V8 Engines

Hydraulic valve lifters, Figs. 18, 19, are removed from the engine as an assembly. The lifters are removed by removing the valve cover, rocker arm and shaft assembly, then lifting out the push rods. If a lifter cannot be removed due to carbon build-up, use a carburetor solvent in the lifter bore. However, if an excessive amount of solvent is used, it will be necessary to change the engine oil. The lifters are also accessible by removal of the lifter covers.

As shown in Figs. 18, 19, different designs of hydraulic lifters are used. When disassembling, do not mix the components of any lifter. Service kits of component parts are available for both types of lifters.

Servicing Hydraulic Lifters—Failure of a hydraulic lifter is generally caused by an inadequate oil supply, dirt or other foreign substance. An air leak at the intake side of the oil pump or too much oil in the engine will cause air bubbles in the oil supply to the lifters, causing them to collapse. This is a probable cause of trouble if several lifters fail to function, but air in the oil is an unlikely cause of failure of a single unit.

In servicing the lifters particular attention should be given the plunger and valve. The plunger should be checked for signs of scoring or wear, and the valve for pitting. Check the valve seat in the end of the plunger for any condition that would not allow the valve to seat perfectly. If any of the above conditions are apparent, install a new lifter assembly.

Do not disassemble a lifter in dirty surroundings or on a dirty work bench. Use clean paper on the bench and, after the lifter has been disassembled, place the loose parts in a numbered rack with the parts of each unit together. Then submerge in clean kerosene as a protection against dirt or corrosion.

With more than one lifter disassembled it is imperative to keep the parts of each lifter separate. The plunger and valve must always be fitted in the same body.

Disassemble Lifter—With a suitable tool, pry out the plunger retainer ring. Clean varnish deposits from inside the lifter body above the push rod seat. Then invert the lifter body and drop out the parts.

Cleaning Lifters—Wash all lifters in a suitable solvent that will remove all trace of varnish and carbon (paint thinner will do). Then, working on one lifter at a time and using clean lint-free cloths, thoroughly wipe off all parts. Clean the plunger and the internal and external surfaces of the body with a hard wiping action to remove any varnish residue.

To insure absolute cleanliness of a reconditioned lifter assembly, it is advisable to service one at a time, assembling it before working on the next one.

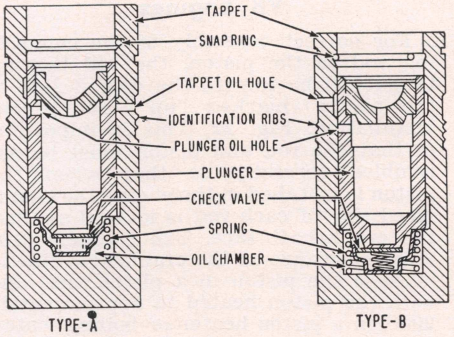

Fig. 19 Hydraulic valve lifters. V-266, 304, 345

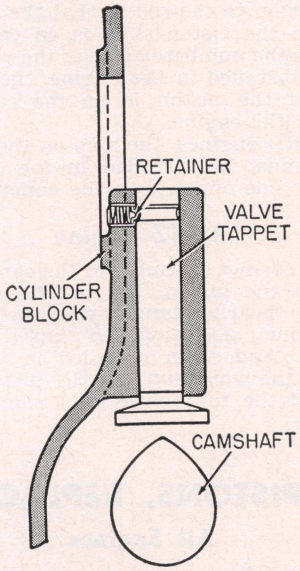

Fig. 20 Tappet and guide construction. RD engines

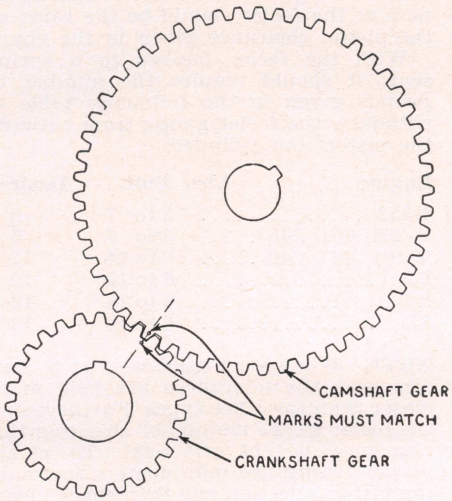

Fig. 21 Valve timing on 6-cylinder engines

Inspection—Inspect the lifter body for blow holes and scoring. Replace entire unit if body is roughly scored or grooved.

Using a magnifying glass, inspect the check valve seat for defects. Inspect the outer surface of the plunger for scratches or scores. Defects in the check valve seat or scores or scratches on the outer surface of the plunger which can be felt with the fingernail are causes for replacing the entire unit.

Replace the push rod seat if the area where the push rod contacts is rough or otherwise damaged.

Using a magnifying glass, carefully examine the check valve for nicks, imbedded material or other defects which would prevent proper seating. Even though no defects are found it is advisable to discard the old valve and use a new one when servicing a lifter.

Assembling Lifters—Rinse all parts in clean kerosene and assemble without drying. This will avoid the adherence of dust or lint if they are blown off or wiped with cloth.

Place the parts in the body in the following order: spring, valve and plunger. The plunger must slide freely in the body. Place the push rod seat on the plunger and depress these parts and install the plunger retainer in the groove in the body.

A-55, BD and SD Engines

Valve lifters or tappets are of the barrel type, operating in guide holes bored in the cylinder block. The lifters can be lifted out of the block after taking off the engine side cover and removing the push rods.

RD Engines

These lifters are of the mushroom type operating in guide holes bored in the cylinder block. To remove lifters, therefore, it is necessary to take out the camshaft and remove the lifters through the bottom of the engine.

The valve lifter bores have spring-loaded retainers in the block, Fig. 20, which are used to hold up the lifters when pulling out the camshaft. When the lifter is pushed up the retainer snaps into the groove at the top of the lifter. After the camshaft is installed, the lifters may be pushed down into position by the push rods.

TIMING GEARS OR CHAIN

When valves are correctly timed, the timing marks on the gears or sprockets should be adjacent to each other. Fig. 21 illustrates the gears on 6-cylinder engines. A chain is used only on A-55 engines.

CAMSHAFT & BEARINGS

All Engines

Camshaft bearings should be installed in sets and care must be exercised to see that the oil holes in the bearings and the oil feed holes in the block are aligned to assure adequate lubrication.

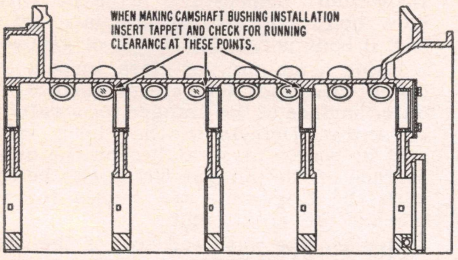

Fig. 21A Checking clearance between valve lifters and camshaft bearings. 4-152 engine

4-152 Service Note

Camshaft bushings must be installed so as to provide running clearance between valve lifters and bushings as shown in Fig. 21A.

PISTONS & RODS, REMOVE

All Engines

After removing the cylinder head and oil pan, examine the cylinder bores above the ring travel area. If the bores are worn so that a shoulder or ridge exists at this point, remove the ridge with a ridge reamer to avoid damaging rings or cracking ring lands of pistons during removal.

Remove connecting rod caps and push the pistons and rods out of the cylinders, using care to prevent rod bolts from nicking crankshaft journals.

Make sure rods and pistons are properly numbered so they can be reinstalled in their proper cylinders. It is advisable to install the caps on the rods to avoid mixing parts.

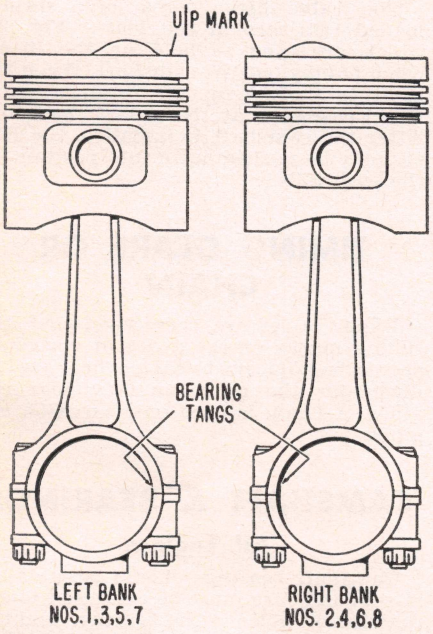

Fig. 22 Correct assembly of pistons and rods. V8 engines

PISTONS & RODS, ASSEMBLE

V8 Engines

For correct assembly of the connecting rod to the piston, the rod bearing tangs will be toward the domed side of the piston (marked "up") for proper installation, Fig. 22. This is important in that the rod and piston must be assembled correctly so that when the piston is installed in the engine the chamfered side of each rod is located against the crankshaft face. The chamfer provides clearance at the crankshaft fillet.

Place the piston in a piston vise, and with the piston heated to approximately 200°, in a piston heater or boiling water, position the rod in the piston and install the piston pin.

A-55 and 6-Cyl. Engines

On A-55, BD and SD engines, assemble the piston to the rod so that the vertical slot in the piston skirt is on the same side as the numbered side of the rod. And when installed in the engine, the slotted side of the piston is on the camshaft side of the engine.

On RD engines, the step on the piston head must be installed in the cylinder on the side opposite to the camshaft.

4-152 Engine

For correct assembly of the connecting rod to the piston, the rod bearing locators (bearing tangs) must be toward the dome side (marked "up") of the piston. And when installed in the cylinder, the word "up" on the piston goes toward the top (camshaft) side of the engine.

PISTONS, REPLACE

All Engines

When fitting a piston, wipe the cylinder wall clean with a cloth and insert the piston upside down in the bore (rings and pin removed). Use a ½″ wide feeler gauge which is long enough to extend the full length of the piston. The thickness of the feeler should be the same as the piston clearance given in the chart.

With the feeler hooked to a spring scale it should require the number of pounds given in the following table to withdraw the feeler gauge from between the piston and cylinder:

Engine	Lbs. Pull	Desired
4-152	3 to 7	5
V-266, 304, 345	3 to 7	5
V-401, 461, 549	10 to 14	12
BD	6 to 18	12
RD	6 to 18	12
SD	6 to 18	12

NOTE—When steel-band-in-skirt pistons are used, the tolerances are held much closer than for other types. Furthermore, the feeler gauge method of checking this clearance is not practical. To attain proper fitting use micrometers for making piston selection and then check clearance as follows:

1. Wipe both piston and cylinder wall with clean, dry cloth.
2. Install piston top downward into cylinder.
3. A non-knurlized piston should be fitted so that there is .0008″ to .0013″ running clearance. This clearance will permit the piston to fall slowly through the cylinder bore of its own weight.

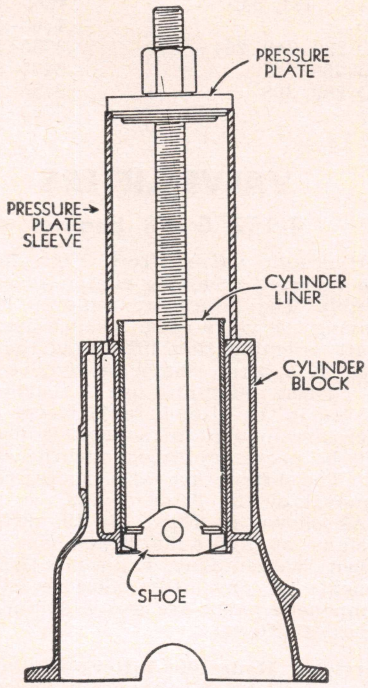

Fig. 23 Removing dry type cylinder sleeve

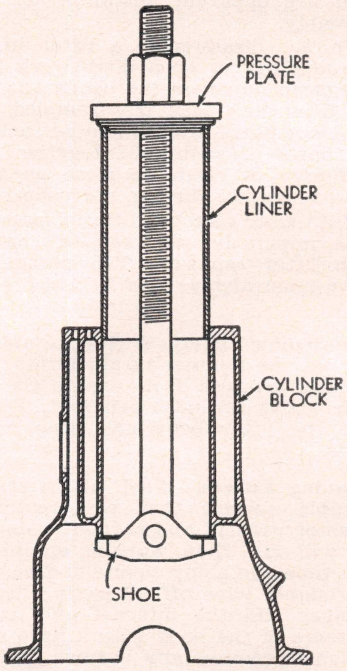

Fig. 24 Installing dry type cylinder sleeve

4. Knurlized pistons should fit slightly closer. These pistons are fitted so there is a slight drag (1 to 2 lbs.) to a light push fit in the cylinder bore.

PISTON RINGS, REPLACE

All Engines

Always use standard size rings in cylinder bores that are standard at the bottom, regardless of the amout of taper in the bore. Oversizes must be determined by the measurement of the narrowest portion of the bore.

New rings should be fitted according to the instructions furnished with the ring package. Ring grooves must be clean and free from carbon and must show no perceptible wear.

PISTON PINS, REPLACE

4-152 Engine

Piston pins are a press fit in the connecting rod. The fit should be .0006-.0012″ in the rod and .0005-.0009″ loose in the piston.

A-55 Engine

Piston pins should be a hand push fit in the piston. The fit can be checked after the rod has been assembled to the piston by holding the piston with rod in a horizontal position. The weight of the large end of the rod should not be quite enough to turn the pin in the piston. Do not ream out piston pin bosses since oversize pins are neither supplied nor permitted.

V-266, 304, 341

Piston pins are a press fit in the connecting rod. The fit should be .0002-.0009″ tight in the rod and .0003-.0007″ loose in the piston.

V-401, 461, 549 & 6-Cyl.

Piston pins are of the floating type, being free to rotate in both the rod and piston bosses. Snap rings, located in grooves in the piston bosses, prevent the pins from rubbing against the cylinder walls.

Select pins that can be installed by pushing with the palm of the hand with piston heated.

CYLINDER SLEEVES

BD-269, RD-372, 406, 450

This type sleeve is removed and installed as shown in Figs. 23 and 24.

These sleeves may be rehoned to take .005 and .010″ oversize pistons. If necessary to exceed .010″ oversize, a new sleeve and piston should be installed.

To remove a sleeve of this type, use screw with pressure plate and sleeve as shown in Fig. 23. Make sure the shoe is square under the sleeve and that the entire assembly is centered on the sleeve to be removed. Tighten the nut to pull the sleeve out of the block. Note the size marked on the outside of the sleeve and replace with the same size.

Before installing the new sleeve, thoroughly clean the bore of the block as well as the outside of the sleeve, especially under the top flange. Then coat the outside of the sleeve with a light mixture of white lead and oil to facilitate installation.

Place the sleeve in the bore and pass the shoe and screw down through the sleeve, bringing the shoe to rest against the wall of the cylinder bore, Fig. 24. Turn the shoe on an angle to obtain maximum bearing. Place the pressure plate squarely on top of the sleeve and turn the nut down to the plate.

Start the sleeve into the bore by hand pressure on the nut. Then after the sleeve is started into the bore, turn the nut with a ratchet, continuing with care until the sleeve is almost in its final position. Release the nut slightly and check to see that the shoe has not slipped and is still well supported on the cylinder boss. See that the flange is clean and then tighten the nut to draw the sleeve into its final position.

After installing the sleeve, it should be honed to remove any distortion and to size it properly for the piston to be used.

ROD BEARINGS, REPLACE

All Engines

These bearings are of the precision insert type, requiring no scraping or reaming.

When installing bearings, be sure the back of the bearing shells as well as the bearing seats in the rods are smooth and clean.

Bearing clearance may be checked with Plastigage, which is available at any auto parts jobber. Instructions for its use are furnished with the package.

Lacking Plastigage, however, use a piece of tough paper or shim stock ¾″ square which measures about .0005″ under the maximum allowable bearing clearance. Oil the shim on both sides and lay it in the center of the bearing. Install the assembled bearing and cap and tighten the cap bolts to normal tension.

The clearance is correct if the rod can be moved endwise when tapped lightly with a hammer. If the rod can be moved endwise by hand, clearance is too great. On the other hand, if the rod will not move when tapped lightly with a hammer, not enough clearance is present.

When using a torque wrench tighten bearing caps to the torque loads given in the table.

MAIN BEARINGS, REPLACE

All Engines

These bearings are of the insert type, requiring no reaming or scraping. They may be removed and replaced without removing the crankshaft.

Plastigage may be used to check bearing clearances, and instructions for its use are furnished with the package.

Lacking Plastigage, an alternate method is to use a piece of tough paper or shim stock 1″ square which measures about .001″ under the maximum allowable bearing clearance. Oil the shim on both sides and lay it in the center of the bearing. Install the assembled bearing and cap and tighten the cap bolts to normal tension.

Rotate the crankshaft through a two-inch arc (one each way) and if it is movable with a fairly heavy drag, the clearance is correct. If there is no perceptible drag, the clearance is too great. On the other hand, if the shaft cannot be moved, not enough clearance is present.

Be sure that the bearings are smooth and clean on both sides when installed. This applies to the bearing seats as well.

When using a torque wrench, tighten bearing caps to the torque loads given in the table.

CRANKSHAFT OIL SEAL, REPLACE

4-152 Engine

The rear main bearing oil seal can be replaced with the engine in the chassis by first removing the transmission, clutch and flywheel.

V8's and 6-Cyl.

Crankshaft rear bearing oil seal consists of two pieces of special packing. One piece is installed in the groove in the rear bearing cap and the other piece is installed in a similar groove in the cylinder block.

Position the rear bearing seal in the groove in the cylinder block. Lay an improvised mandrel in the bearing bore and strike the mandrel with a hammer to drive the seal into the groove. Install the seal in the bearing cap in a similar manner. Using a sharp knife, cut off both ends of each seal which project out of the grooves. When cutting off the ends of the seals, do not leave frayed ends which would prevent proper seating of the bearing cap if the ends should extend between cap and cylinder block.

OIL PUMP REPAIRS

A-55 Engine

To service the oil pump, take off the cover and tilt the pump body to take out the rotors.

Replace pump drive shaft and gear if gear teeth are chipped or worn. Make sure pump drive shaft oil passage is clear. If either outer or inner rotors are worn, both rotors as well as pump shaft must be replaced.

When reassembling note that chamfered edge of outer rotor is installed with chamfer toward base of body and away from cover. To assemble otherwise will result in pump seizure when cover is tightened down.

4-152, V8's and 6-Cyl.

Conventional gear type oil pumps, located in the crankcase, are used on all engines. After removing the oil pan, the

pump may be unfastened from its mounting and disassembled for repairs.

Inspect the pump gears for nicks or burrs. Inspect the bottom cover for wear and dress down on a surface plate with emery if necessary. Place the bottom cover on the pump and check the drive shaft end play. If end play is excessive (more than .006"), replace the drive and idler gears.

Service Note

Whenever the oil pump is removed, the distributor will have to be taken off as well in order to reinstall the pump without damage. The reason for this is that the slots in the end of the oil pump drive shafts must match the tangs on the end of the distributor drive shaft. If an attempt is made to install the pump while the distributor is in place, it will be difficult or impossible to align the slots and tangs with the result that the pump will be damaged when its mounting bolts are tightened. Be sure to retime the ignition when the oil pump and distributor are installed.

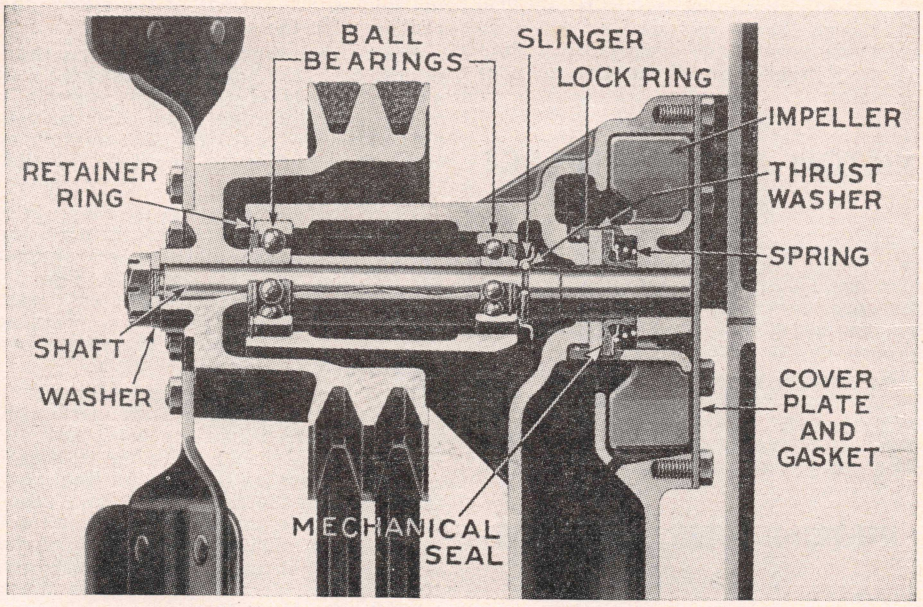

Fig. 25 Sectional view of RD engine water pump. Pumps used on V8 and BD engines are similar

WATER PUMP REPAIRS

V-401, 461, 549, BD, RD

Fig. 25 shows the pump used on RD engines. The same design is used on BD engines except that provision is made for only one fan belt. To overhaul the pump, proceed as follows:

Remove the fan pulley, being careful not to damage its flanges. Release the snap ring from the front bearing. Take off the rear cover plate. Press the shaft out of the impeller from the rear and remove the shaft and bearings as a unit. Press the shaft from the bearings, sleeve and slinger, and remove the lock rings. Release the lock ring from the impeller and take out the seal washer, seal and spring, noting carefully the arrangement of these parts so that no difficulty will be experienced when assembling.

Before assembling the pump, check the thrust face of the housing. If the surface is not smooth or true it should be smoothed up with a special water pump facing cutter.

To assemble the pump, apply a liberal amount of grease to the bearings and to the shaft between the bearings. Then install the shaft and bearings in the housing as a unit. Press the impeller and seal assembly down onto the shaft, pressing it down just flush with the end of the shaft. Complete the assembly by installing the cover plate and fan pulley.

4-152, V-266, 304, 345, A-55, SD

The pumps used on these engines are of the sealed ball bearing type packed with lubricant at the time of assembly and requiring no further lubrication. When disassembling, carefully note the arrangement of the seal parts so that correct assembly may be assured.

Never soak the shaft and bearing assembly in cleaning solvent because it will dissolve the lubricant. To clean the shaft and bearing, merely moisten a cloth with cleaning fluid and wipe away any surplus lubricant or other foreign matter.

Be sure the face of the housing against which the thrust washer turns is smooth and true. If not, smooth it up with a special water pump facing cutter.

IGNITION TIMING

If a timing light is to be used to set ignition timing, disconnect the vacuum advance pipe to the carburetor and place a piece of tape over open end of pipe. *This is important as carburetor trouble can affect timing adjustments.*

Lacking a power timing light, an accurate method of setting ignition timing with the engine stopped is with the aid of a jumper light. Be sure to use a light bulb that corresponds with the system voltage of the vehicle.

1. Remove distributor cap and rotor and see that the breaker gap is set according to specifications.
2. Rotate engine until No. 1 cylinder is at the ignition timing point as indicated by the timing pointer and and timing mark being lined up with each other.
3. Connect the jumper light between distributor ignition terminal and ground.
4. Turn on ignition switch.
5. Loosen distributor and turn it in the direction of normal rotation until the points just close (light out). Then slowly turn distributor in the opposite direction just to the exact point that the light goes on. Tighten distributor in this position.

Service Note

On V-266, 304 and 345 engines, connect timing light to No. 8 spark plug.

Carburetor Section

Performance Complaints

Flooding, stumble on acceleration or other performance complaints are in many instances caused by the presence of dirt, water or other foreign matter in the carburetor. To aid in diagnosing the cause of the complaint, the carburetor should be carefully removed from the engine without draining the fuel from the bowl. The contents of the fuel bowl may then be examined for contamination as the carburetor is disassembled.

Check the fuel in the bowl for contamination by dirt, water, gum or other foreign matter. A magnet moved through the fuel in the bowl will pick up and identify any iron oxide dust that may have caused intake needle and seat leakage.

Inspect gasketed surfaces between body and air horn. Small nicks or burrs should be smoothed down to eliminate air or fuel leakage. On carburetors having a vacuum piston, be especially particular when inspecting the top surface of the inner wall of the bowl around the vacuum piston passage. A poor seal at this location may contribute to "cutting-out on turns" complaint.

Fill the carburetor bowl with clean fuel before installing on manifold. This will help prevent dirt trapped in the fuel system from being dislodged by the free flow of fuel as the carburetor is primed. The operation of the floats and intake

needle and seats may be checked under pressure if the fuel pump is used at the bench to fill the carburetor bowl. Operate the throttle several times and visually check the discharge of the pump jets.

Poor Mileage and Engine Loading Complaints

Cases of poor mileage and engine loading on carburetors with automatic choke may be due in many instances to sluggish choke valve opening during cold drive-away, caused by insufficient vacuum in choke housing, a plugged or restricted heat pipe or inlet in choke cover. To check for this condition, have engine warm and running at slow idle. Remove choke heat pipe and hold a finger over the heat inlet hole (hole is on choke housing on some carburetors). If there is little or no vacuum pull on the finger, check the choke housing for gasket leaks or plugged vacuum passages. If these are OK, check choke vacuum passages in carburetor between choke housing and manifold.

Dirty or Rusty Automatic Choke Housing

In cases where it is found that the interior of the choke housing is dirty, gummed or rusty while the carburetor itself is comparatively clean, look for a punctured or eroded manifold heat tube (if one is used).

HOLLEY NOTES

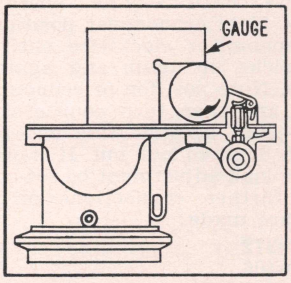

Fig.①—Float level, models 852-FFG, 2110, AA-1G.

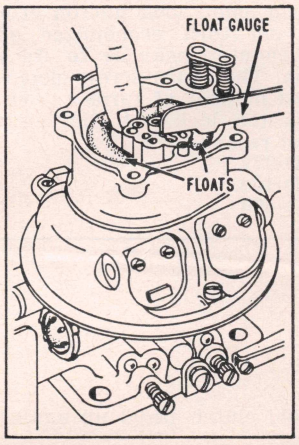

Fig.② —Float level, models 885-FFG, 2140-G.

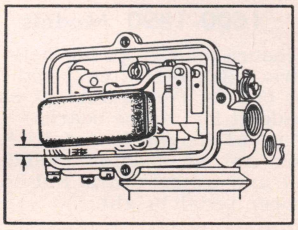

Fig.③ —Float level, model 1904. Measured from roof of float chamber to lowest point of float with carburetor inverted.

HOLLEY CARBURETOR ADJUSTMENTS

Carb. Model	Engine	Float Level	Idle Screw Turns Open	Fast Idle Setting	Dashpot Setting
AA-1G	BD-308	1¼①	1–1½	None	None
852-FFG	RD-450	1¼①	½	None	None
852-FFG	V-401	1¼①	½–¾	None	None
852-FFG	V-461	1¼①	⅞–1⅛	None	None
2140-G	RD-501	¼②	⅜–⅝	None	None
2140-G	V-549	¼②	⅜–⅝	None	None
885-FFG	RD-372	7/32②	1¼–1¾	None	None
885-FFG	RD-406	7/32②	1-1½	None	None
1904	4–152	13/64③	1	None	None
1904	BD-220	13/64③	1¼–1¾	None	.095–.105④
1904	BD-240	13/64③	1¼–1¾	None	.095–.105④
1904	BD-264	13/64③	1¼–1¾	None	.095–.105④
1904	BD-269	13/64③	1¼–1¾	None	None
1904	BD-282	13/64③	1⅜	None	None
1904	SD-220	13/64③	¾–1¼	None	None
1904	SD-240	13/64③	1⅜	None	None
2110	BD-264	1 11/32①	1¼–1¾	None	.045–.065④
2110	BD-308	1 11/32①	1–1½	None	.045–.065④
2300	V-266	⅜⑧	¾	⑥	1/16⑤
2300	V-304	⅜⑧	⅝–¾	⑤	1/16⑤
2300-G	V-304	⅜⑧	⅞	.018–.020⑦	None
2300-G	V-345	⅜⑧	1½	.018–.020⑦	None

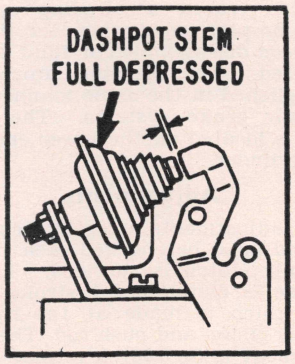

Fig.④ —Dashpot used with automatic transmission. Make sure choke valve is wide open when making this adjustment.

⑤—Loosen jam nut and rotate complete dashpot to obtain clearance listed.

⑥—Set throttle stop screw so it just touches fast idle cam at curb idle. Make this setting before adjusting idle mixture screws.

⑦—Adjust fast idle stud so there is the clearance listed between stud and fast idle cam when throttle valves are set for curb idle and choke valve fully open. Make this setting before adjusting idle mixture screws.

⑧—This is a fuel level setting. With engine running, remove sight plug from side of bowl. If fuel level is not on a line with threads at bottom of sight hole, loosen lock nut slightly (top of bowl) and turn adjusting nut as required. Turn nut clockwise to lower fuel level and vice-versa.

CENTURY LPG

RD-501, V-304, V-345, V-401, 461, 549

Idle fuel adjustment automatically gives the correct economy mixture for both full and part throttle operation. This is accomplished by the use of a connecting drag link which causes the throttle plate and metering valve to operate simultaneously. The idle fuel adjustment is made through an adjusting screw found in each end of the drag link. Either end may be used to make the adjustment. Setting the idle fuel mixture as given in the following steps will synchronize the throttle plate and the metering valve to give the correct mixture.

1. Set throttle fast idle by turning throttle stop screw in from closed throttle position 3 or 4 turns.
2. Start engine.
3. Adjust idle adjusting screw in drag link until engine runs smooth. Turn screw clockwise to enrich the mixture.
4. Turn throttle stop screw out until engine idles at 600 rpm.
5. Readjust idle adjusting screw in drag link to get highest possible engine rpm. Should it go higher than 900 rpm, readjust throttle stop screw to obtain 600 rpm. Then readjust idle screw in drag link to obtain highest engine rpm.
6. Adjust engine to 400 rpm idle by throttle stop screw.
7. Replace cotter pin in drag link to lock adjustment screw.

ENSIGN LPG, MODEL R

Carburetor Starting Adjusting Screw, Adjust

Loosen the lock nut on the starting adjusting screw and turn clockwise until it bottoms. Then turn the screw counterclockwise the required number of turns and tighten lock nut. The number of turns required for the various engines is as follows:

BD-240	5/8
BD-264	7/8
BD-282	3
BD-308	2
RD-372	2
RD-406	1
RD-450	2

Regulator Unit Idle Adjusting Screw, Adjust

Turn the idle adjusting screw on the regulator unit clockwise until it bottoms gently. Then turn the screw counterclockwise the required number of turns as follows:

BD-240	7/8
BD-264	5/8
BD-282	3/4
BD-308	1
RD-372	3/4
RD-406	2
RD-450	1 1/4

Economizer Load Adjustment, BD Engines

Loosen large lock nut and turn load adjusting screw clockwise to its extreme position. Then turn screw counterclockwise the required number of turns (see below) and tighten lock nut.

BD-240	5
BD-264	7
BD-282	4 3/4
BD-308	9 1/2

Economizer Load Adjustment, RD Engines

With engine not running, disconnect vacuum line from economizer. Then set the load adjustment as follows: Loosen large lock nut and turn entire economizer clockwise until body assembly bottoms in carburetor. Then turn body assembly counterclockwise the number of turns given below. Temporarily plug loose end of vacuum line. Start engine and, when at operating temperature, set hand throttle to approximately 2/3 of governed speed. Turn economizer assembly clockwise until engine speed drops slightly. Note economizer position. Then turn economizer clockwise until engine speed picks up again and again drops slightly. Note position of economizer assembly and then turn counterclockwise to mid-point between this and previous position. Tighten lock nut. It is necessary that the load adjustment be set correctly before further connections or adjustments are made.

RD-372	4 3/8
RD-406	5
RD-450	4 3/4

Economizer Part Throttle Adjustment, RD Engines

Loosen small lock nut on economizer cover and turn economizer adjusting screw counterclockwise to its extreme position. Then turn screw clockwise the required number of turns (given below) and tighten lock nut. Unplug vacuum line and reconnect.

RD-372	4 1/2
RD-406	4 11/16
RD-450	3 3/4

Clutch Section

HYDRAULIC CLUTCH CONTROL

Used with 13", 14", 15" Clutches; on 1600-1890 Models and CM-80 and CM-110 Models

As shown in Fig. 1, the system consists of a pedal-operated cylinder, similar to a brake master cylinder, which transmits hydraulic fluid to the slave cylinder mounted on the transmission. The slave cylinder moves the clutch release bearing to engage and disengage the clutch. Tubing and flexible hose connect the two units.

The hydraulic cylinder is filled with high grade hydraulic brake fluid. To replenish fluid, fill the reservoir to within 3/4" from the top of the filler neck.

Bleeding System

Any air trapped inside the system will eventually bleed itself to the reservoir. However, this is not accomplished immediately and takes place over an extended period of clutch pedal operation. For this reason a bleeding operation should be performed whenever the units have been disassembled or fluid lines disconnected. The bleeding procedure is accomplished in the same manner as for hydraulic brake systems. The bleeder screw is located on the lower end of the slave cylinder.

Adjustments

Two adjustments affect clutch operation and must be checked each time the hydraulic clutch is serviced. The first of these is clutch pedal stroke adjustment which is made at the hydraulic cylinder piston and push rod. The second adjustment is for clutch release bearing clearance. This adjustment is made at the upper end of the slave cylinder.

Clutch Pedal, Adjust Except 1600-1890 Models

1. With clutch pedal disconnected from hydraulic cylinder push rod, pull piston and push rod assembly its full length of stroke out of cylinder. *Be sure piston is held snugly against snap ring stop in end of cylinder.*
2. Hold clutch pedal up against pedal stop.
3. Adjust clevis yoke on end of piston push rod until yoke can be fastened to clutch pedal. Tighten jam nut on yoke. Install end pin and cotter pin.

1600-1890 Models

1. Measure clutch pedal height from lower edge of clutch pedal lever to toe boards. (measurement should be made at 90° to toe boards)
2. If pedal height is not 5 5/8", loosen lock nut on master cylinder push rod and adjust push rod to obtain proper pedal height.

Clutch Release Bearing Clearance Except CM-80, CM-110 and 1600-1890 Models

1. Remove slave cylinder push rod return spring, Fig. 2. Loosen clevis yoke lock nut on push rod. Remove cotter pin and clevis yoke end pin. Remove two hex head mounting bolts from slave cylinder body and move cylinder away from clutch re-

Fig. 1 Hydraulic clutch control. CM-80, CM-110 and 1600-1890 Models have suspended pedal

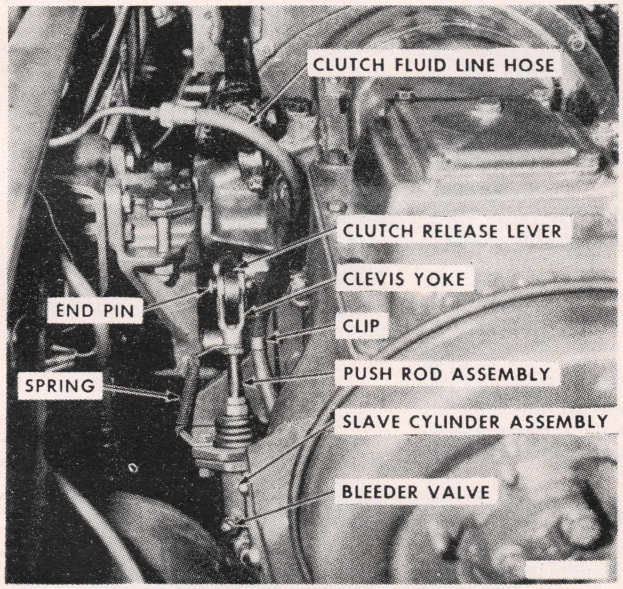

Fig. 2 Slave cylinder mounting details

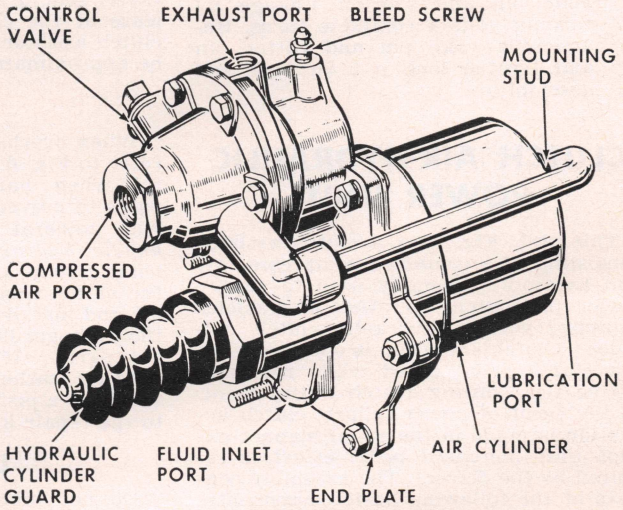

Fig. 3 Clutch air-over-hydraulic power unit (Mini-Pak)

lease lever.

2. Move clutch release lever upward until release bearing contacts clutch release levers. With push rod in released position, turn clevis yoke until yoke hole indexes with clutch release lever hole when slave cylinder mounting holes are aligned with mounting bracket holes. *Be certain that clutch release bearing is held against release levers while completing this step.*
3. After completing Step 2, turn clevis yoke on to push rod 2½ turns which provides approximately ⅛″ clutch release bearing-to-levers clearance. Tighten lock nut on push rod to keep clevis yoke from turning while reinstalling slave cylinder.
4. Reinstall slave cylinder. Connect clevis yoke and clutch release lever with end pin. Insert cotter pin. Recheck lock nut on push rod and install push rod return spring, keeping spring clips aligned.

CM-80 and CM-110

This adjustment should follow clutch pedal adjustment.

1. Depress clutch pedal until there is the feel of the release bearing contacting the clutch release levers.
2. Adjust the pedal free movement by loosening the lock nut on the slave cylinder and turning the push rod to obtain 1½″ pedal free movement.
3. Tighten lock nut and recheck pedal free movement.

1600-1890 Models

This adjustment should follow clutch pedal adjustment.

1. Loosen lock nut on clutch slave cylinder push rod. Remove cotter pin and yoke pin.
2. Move clutch release lever forward until release bearing contacts clutch release fingers. With slave cylinder push rod assembly retained in the released position (bottomed), turn yoke until yoke hole indexes with clutch release lever hole. Install yoke pin.
3. After completing step 2, remove yoke pin and shorten linkage by turning yoke 4 complete turns. Reassemble yoke pin and cotter pin and tighten lock n t on push rod assembly.

CLUTCH AIR-HYDRAULIC POWER UNIT

This unit, Fig. 3, is a clutch assistor consisting of a combined compressed air and hydraulic assembly used to supply power for clutch operation on vehicles equipped with a hydraulic clutch cylinder. Clutch actuation is obtained with low clutch pedal effort while retaining "drive feel" during clutch engagement. In the event of power failure, clutch actuation is made in the usual manner except that increased pedal effort is required by the driver. The assembly consists of the following basic components:

1. A compressed air cylinder containing an air pressure operated piston and push rod.
2. A hydraulic cylinder and piston.
3. An air pressure control valve containing a hydraulic pressure operated piston, an air pressure poppet, an atmospheric pressure poppet valve and an air pressure control diaphragm.

Operation

To disengage the clutch, the clutch pedal is depressed which forces fluid out of the clutch hydraulic cylinder under pressure into the clutch assistor hydraulic cylinder and control valve piston chamber, Fig. 4. When fluid pressure acting upon the control hydraulic piston reaches a pre-determined value, the valve poppet closes the atmospheric port and opens the air pressure port. This action admits compressed air to the air pressure side of the air cylinder, Fig. 5. The force from the air pressure applied to the air piston is transmitted through the push rod to the hydraulic piston of the clutch assistor and through the clutch push rod to the clutch release lever to disengage the clutch.

To engage the clutch, the driver gradually releases the foot pressure on the clutch pedal. As pressure is reduced in the clutch assistor hydraulic cylinder, pressure will also be reduced in the clutch assistor hydraulic cylinder and control valve chamber. The air pressure applied to the air pressure piston will also be reduced. Fluid is then returned from the clutch assistor hydraulic cylinder in accordance with release of air pressure. When foot pressure on the clutch pedal is released sufficiently to allow the control valve to close the air pressure port and reopen the atmospheric port of the clutch assistor, the clutch is fully engaged.

Adjustment

The free pedal travel will be slight (approximately ¼″) and can be compared to the free travel that is acceptable for the pedal of hydraulic brake systems. The clutch assistor should be adjusted to provide complete engaging and disengaging of the clutch when the pedal is depressed and released. An average of ½″ clutch release bearing travel should be provided for proper release of the clutch. The stroke of the clutch assistor hydraulic cylinder should be approximately $1\frac{13}{16}$″.

Repairs

When overhauling the clutch assistor, refer to Fig. 6 as a guide. Be very careful when handling hydraulic system parts to prevent their coming in contact with mineral oils or grease. *Do not handle hydraulic piston cups or seals with greasy hands.* When overhauling the clutch assistor, always use a repair kit and install all the parts contained in the kit regardless of the condition of the old parts. If replacement of the air cylinder leather piston packing is necessary, use a piston packing kit in addition to the repair kit.

Lubrication

Do not lubricate the clutch assistor until it has been permanently installed on the vehicle. This is a safeguard against lubricating oil entering the hydraulic section which might cause damage to the rubber cups and seals. The clutch assistor should be lubricated every 10,000 miles or every six months, whichever occurs first, with vacuum cylinder oil.

To lubricate, remove the ⅛″ pipe plug located in the end of the air cylinder shell and inject vacuum cylinder oil through this port until oil begins to run out, then replace pipe plug. *During lubrication, the engine should be shut off and the clutch assistor should be in the released position.*

SINGLE PLATE CLUTCHES

Removal

When removing the transmission for the purpose of gaining access to the clutch or for any other reason, extreme care should be taken to support the weight of the transmission until it is completely removed so that the main drive gear splines will clear the driven member. The reason for this is that there is the possibility of distorting the driven member which will prevent a free release of the clutch.

The 10-TT and 15-TT pressure plates are drilled and tapped so that three capscrews and washers may be inserted through the back plate to hold the clutch assembly compressed during removal.

The 11-RT, 12-RT, 13-RT and 14-RT clutches are held in a compressed position with retaining clips in place of retaining capscrews. Place a retaining clip between the back plate and pressure plate lug and loosen the back plate-to-flywheel capscrews only enough to wedge the clip in place. Turn the flywheel one-third turn and install a second clip in the same manner. Follow the same procedure for the third retaining clip. All capscrews should be backed out gradually to avoid damage to the back plate.

Install Clutch to Flywheel

Position the driven member and clutch pressure plate assembly on the flywheel, using a stub shaft to align the driven member. On RT Series clutches, install the clutch-to-flywheel retaining capscrews and tighten only to a point where the retaining clip can be removed. Turn the flywheel one-third turn and remove the remaining clips in the same manner. Tighten all retaining capscrews securely and remove the stub shaft.

The 10-TT and 15-TT clutches are installed in the same manner; however, the retaining capscrews (in place of clips) can be removed after installation is completed.

Lubrication

Easy clutch operation is dependent to a large degree on lubrication of the clutch release shaft and clutch control linkage, and the application of a thin coating of lubricant to the wearing surfaces of the clutch release sleeve.

Use a low pressure hand gun and lubricate the clutch release sleeve every 15,000 to 20,000 miles under normal conditions. For unusual "stop and go" con-

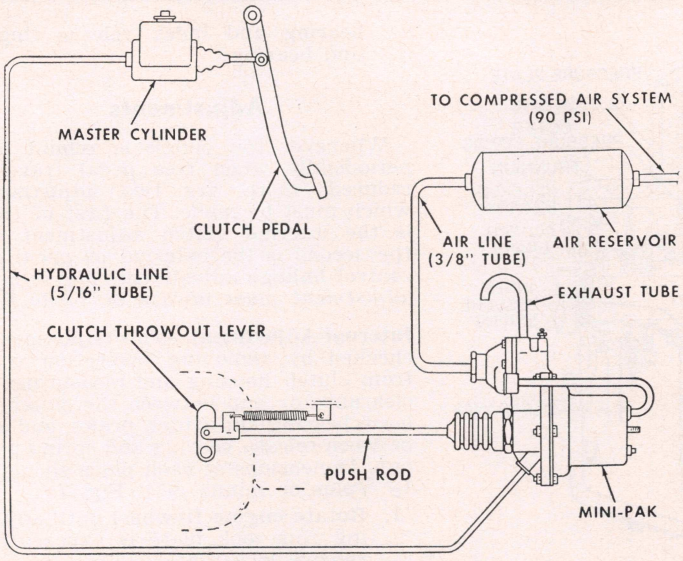

Fig. 4 Schematic diagram of typical air-hydraulic power unit

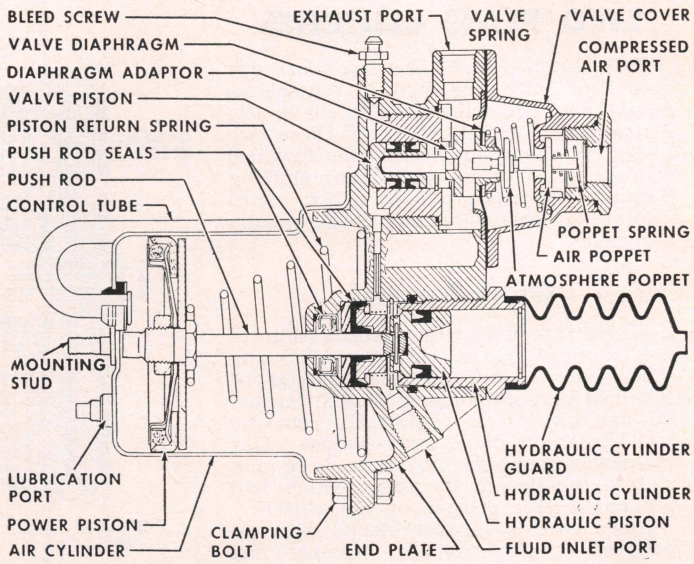

Fig. 5 Sectional view of air-hydraulic power unit

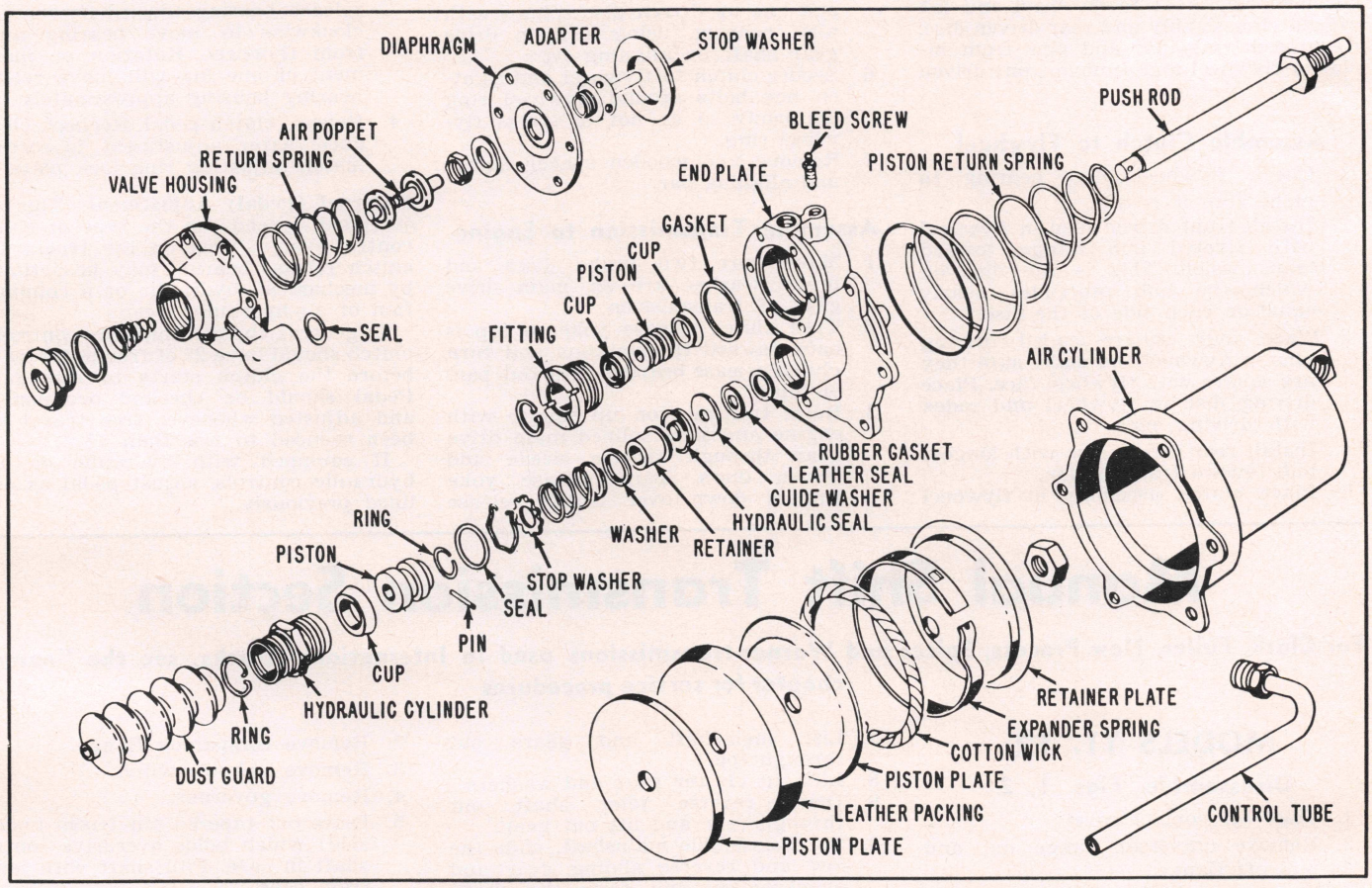

Fig. 6 Exploded view of air-hydraulic power unit

ditions, lubricate every 10,000 miles. Use lubricant similar to Lubriplate No. 110. Do not overlubricate.

Clutch Pedal, Adjust

Suspended Pedal Type—The clutch pedal should have a minimum of 2″ free movement before clutch pressure is felt. Increase or decrease clutch pedal free travel by loosening the rod lock nuts on each side of the turnbuckle. Looking down on turnbuckle, turn it counterclockwise to increase free travel or clockwise to decrease free travel. Tighten lock nuts after adjustment.

Conventional Pedal—If there is less than 2″ of free movement of the pedal, adjust the yoke on the clutch release rod as required to obtain at least 2″ of free pedal travel.

TWO PLATE CLUTCHES

This clutch, Fig. 7, is a two-plate dry disc type with the two driven plates mounted on the splined clutch shaft. The driving disc, which separates these two plates, is mounted within the flywheel on four pins. As an aid to gear shifting a clutch brake is provided, which comes into action when the clutch pedal is fully released.

Clutch Removal

When removing the transmission to gain access to the clutch or for any other reason, extreme care should be taken to support the weight of the transmission until it is completely removed and the main drive gear splines clear the driven members. Failure to do so may distort the driven members which will prevent a free release of the clutch.

Place two ¾″ spacer blocks of wood between clutch release bearing and spring plate hub. Disengage the clutch with the clutch pedal for installation of the spacer blocks.

Remove hex bolts and washers holding flywheel ring gear to flywheel and lift off clutch assembly and rear driven disc. Remove driving disc and pins from inside of flywheel and remove front driven disc.

Assemble Clutch to Flywheel

1. Check flywheel pilot bearing to make sure it is free.
2. Install front driven disc in flywheel with riveted hub flange toward transmission. This is the disc on which the hub protrudes nearly equal on each side of the disc.
3. Place four square-headed driving pins in flywheel and make sure they are square with flywheel face. Place driving disc in flywheel and index with driving pins.
4. Install rear driven disc with longest hub toward transmission.
5. Place clutch assembly in flywheel and line up driven disc splines with pilot bearing, using a main drive gear shaft or aligning bar.
6. Secure clutch to flywheel and tighten hex bolts around flywheel ring uniformly so as not to stress flywheel ring.
7. Remove two wooden spacer blocks and aligning bar.

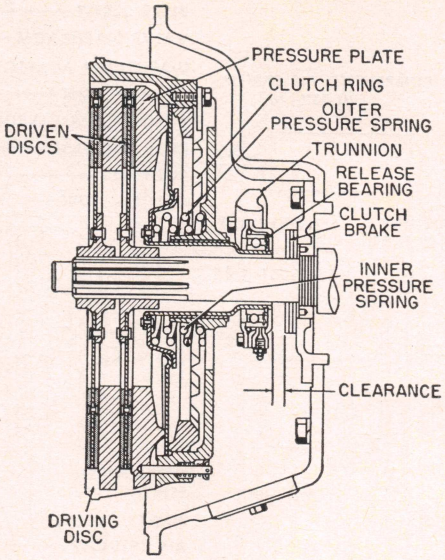

Fig. 7 Two-plate clutch

Assemble Transmission to Engine

1. Make sure two brake discs and brake washer are on main drive gear of transmission.
2. Turn clutch release yoke so top is back toward transmission and turn clutch release bearing with flat part on top.
3. Raise transmission up square with engine and slide splined main drive gear through release sleeve and driven discs. Turn release yoke fingers down over clutch release bearing and index release fingers and bearing.

Adjustments

Whenever the clutch is rebuilt, and periodically when free pedal travel is reduced, there are two adjustments which must be made. The first of these is the internal clutch adjustment and the second is the external or pedal and control linkage adjustment. *The internal adjustment must always be made first.*

Internal Adjustment—This adjustment is checked by removing inspection cover from clutch housing and measuring the clearance or gap between the clutch release bearing and clutch brake, and also between release bearing and spring plate hub. Dimensions at each place should be ½″ (plus or minus $\frac{1}{32}$″), Fig. 7.

1. Rotate engine flywheel until adjusting ring lock plate is exposed and remove lock plate.
2. Release clutch by blocking clutch pedal down in depressed position.
3. Use a pry bar to turn adjusting ring. Turn ring counterclockwise to move release bearing toward flywheel or clockwise to move bearing away from flywheel. Rotation or movement of one lug will move release bearing housing approximately $\frac{1}{32}$″.
4. Release clutch pedal. Recheck clearance. After adjustment is correct, install adjusting ring lock plate.

External (Pedal) Adjustment—This adjustment depends on the type of clutch control system used on the truck. The clutch release bearing may be actuated by mechanical, hydraulic or a combination of air-hydraulic means.

In general, the mechanically controlled clutch should have 2″ of free pedal travel before the clutch starts to disengage. Pedal should be checked occasionally and adjusted whenever free travel has been reduced to less than 1½″.

If equipped with hydraulic or air-hydraulic controls, adjust pedal as outlined previously.

Manual Shift Transmission Section

For Clark, Fuller, New Process, Spicer and Warner transmissions used in International trucks, see the "name" chapter for service procedures

MODELS T1, T2

Disassemble, Figs. 1, 2

1. Take off control cover.
2. Remove universal flange nut and pull off flange.
3. Remove speedometer driven gear and front and rear bearing retainers.
4. Drive countershaft out rearward, allowing cluster gear to lie in case.
5. Pull main drive gear out through front.
6. Remove mainshaft front pilot bearing and push mainshaft far enough to rear to permit removal of speedometer drive gear and rear bearing.
7. Lift mainshaft and gears out through top.
8. Lift out cluster gear and washers.
9. Drive reverse idler shaft out through rear and lift out gear.
10. To disassemble mainshaft, slide the low and reverse sliding gear and synchronizer unit from the shaft. Release snap ring and take off the second speed gear, bushing and thrust washer.
11. Reverse the order of the above procedure to assemble the transmission.

T2 O. D. TRANS.

Disassemble, Fig. 3

1. Drain lubricant.
2. Remove companion flange.
3. Remove lockout switch.
4. Remove governor.
5. Drive out tapered pin (from underside) which holds overdrive control shaft in case. Pull shaft with lever from case.
6. Remove screws which attach overdrive case and adapter to transmission. Tap end of output shaft lightly with a soft mallet and remove overdrive case. This prevents shaft and ring gear from being removed with case and spilling the 12 clutch rollers.
7. With case removed, slide governor and speedometer drive gear from shaft.

8. Reinstall one capscrew to hold adapter to transmission.
9. Remove shift rail adapter spring from inside of overdrive case. Pry out control shaft and ouput shaft oil seal from case. Discard seals and replace with new ones upon reassembly.
10. Remove outer snap ring, rear bearing and inner snap ring from shaft.
11. Remove output shaft and ring gear, catching 12 clutch rollers, Fig. 4.
12. Separate ring gear and output shaft by removing large snap ring.
13. Pry retaining clip that retains roller clutch assembly (free wheeling unit) to output shaft. Then remove free wheeling cam and pinion case assembly, Fig. 5. Remove retaining clip holding the two units together and separate.
14. Slide sun gear with shifting collar off end of transmission mainshaft and at the same time remove shift rail from case adapter, Fig. 6.
15. Remove two snap rings which retain shifting collar to sun gear and separate collar and gear.
16. Remove "C" washer located on shift rail between shift fork and "C" washer cup. Then slide fork, "C" washer cup and reverse lock-up spring from shift rail.
17. Unfasten solenoid from case and turn clockwise ¼ turn and remove from adapter.
18. Remove large snap ring located in adapter next to retainer plate with oil trough. These parts can then be removed as shown in Fig. 7.
19. Before further disassembly of the overdrive unit can be made, it will be necessary to partially disassemble the transmission as follows:
20. Remove transmission cover.
21. Remove main drive gear bearing retainer, noting that oil drain is located below.
22. Start main drive gear bearing out of case by tapping on outer race from inside of case. As soon as bearing is started, work it out of case by moving end of shaft from side to side.
23. Pull overdrive adapter and mainshaft toward rear of transmission case, lowering extended end of mainshaft to permit removal of synchronizer from inside of case. Remove snap ring and strip mainshaft of parts.
24. Remove large snap ring holding bearing in adapter. Pull adapter off bearing and press bearing from mainshaft.
25. Turn transmission low and reverse shift lever shaft to its forward limits. This will provide clearance for removal of reverse lockout cam.

Assemble

1. Reverse the disassembly procedure to assemble the transmission and overdrive, observing the following precautions:
2. Prior to assembling the overdrive unit, select correct thickness of snap ring that will secure (a) mainshaft

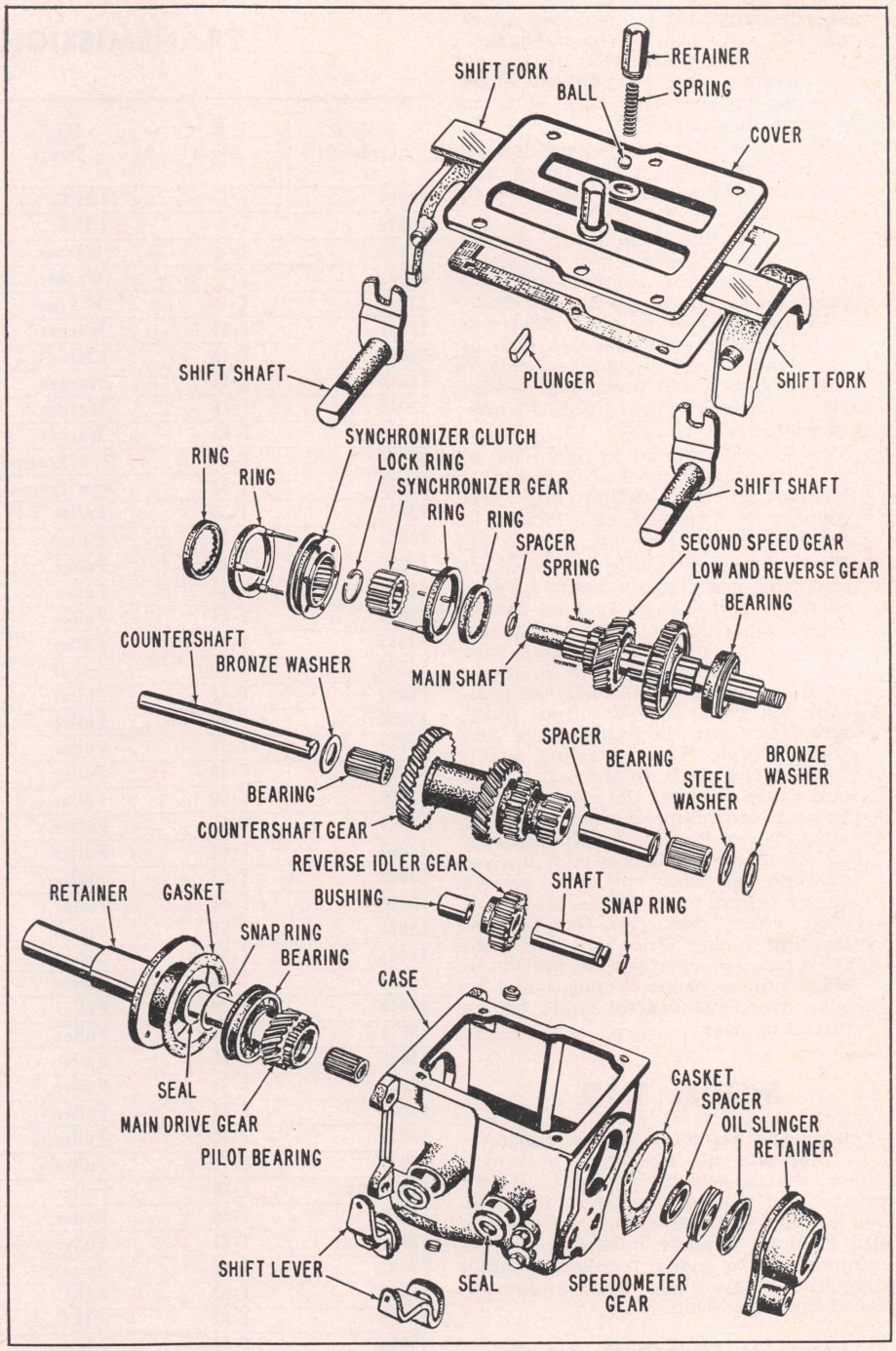

Fig. 1 Three speed transmission. Model T-1

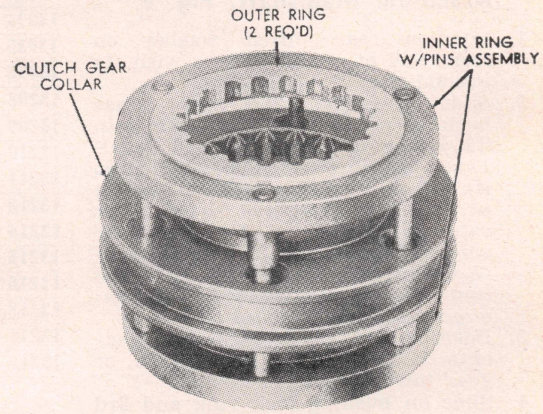

Fig. 2 On T1 and T2 transmissions the synchronizer consists of the parts shown plus the synchronizer clutch gear which is secured to the mainshaft with a snap ring

rear bearing in overdrive case adapter (b) rear bearing to mainshaft, (c) retaining plate with oil trough in adapter, and (d) output shaft bearing in overdrive case with no perceptible end play.

3. Always install new gaskets and oil seals if unit has accumulated any extensive mileage or if damaged in removal.
4. When installing sun gear control plate and blocker ring assembly, *be sure* that the blocker ring and pawl are properly positioned. Position blocker ring so that pawl will be located between the two lugs of the blocker ring. The notched side of the pawl should be positioned so that the notch faces toward top of transmission.
5. The solenoid should be installed so that opening in end of solenoid is located **to** the bottom and that plunger is engaged and locked in pawl.
6. To facilitate installing output shaft and ring gear, apply heavy grease to roller clutch cage to hold the 12 rollers in position. Then, with low gear of transmission engaged, turn cage and rollers counter-clockwise until the rollers are in their low positions on cam. Install output shaft and ring gear on pinion cage and roller clutch (free wheeling unit), turning the shaft to the left as the outer race encloses the rollers.
7. Prior to installing overdrive case to adapter, position shift rail retractor spring in case. Insert a pilot in case through retractor spring to assure spring alignment. While installing case, guide shift rail through retracting spring. Pilot will be forced from case. *Be sure* slotted portion in shift rail is properly positioned to take overdrive control shaft before installing case.

MODEL T-12

During the assembly of the transmission, lubricate all bearings, bushings, splines, shafts, selector poppet balls and springs, and the selector shift forks at their contact surfaces in the gear grooves with SAE 30 straight mineral oil. This is important to avoid possible damage when the reassembled transmission is placed into operation.

Assemble Mainshaft, Fig. 8

1. Position rear thrust washer on front end of center splines with its ground face to the front.
2. Slide on longer (2nd gear) brass bushing up to thrust washer with its engaging tangs toward front. *This bushing must be positioned so its oil hole is in line with the oil hole in the mainshaft, and so that the cutaway portion of the 3rd gear splined bushing will be over the synchronizer ball and spring when the tangs of the two bushings are engaged with the bushing lock ring.*
3. Position 2nd gear spacer and gear onto bushing with spur teeth of gear toward rear.
4. Slide on bushing lock ring and 3rd

TRANSMISSION IDENTIFICATION

I. H. C. Code ①	I. H. C. Model	Mfg's Name	Mfg's Model	No. Speeds	Oil Pints
13001	T-1	I.H.C.	T-1	3	2½
13002	T-2	I.H.C.	T-2	3	3½
13005	T-5	Warner	T-87D②	3	6
13007	T-7	Warner	T-87②	3	6
13010	T-10	Warner	T-9②	4	5½
13011	T-11	Warner	T-9②	4	5
13012	T-12	I.H.C.	T-12	4	5
13015	T-15	Warner	T-98②	4	7
13016	T-16	Warner	T-98②	4	7
13018	T-15	Warner	T-98A②	4	7
13019	T-19	New Process	540②	5	10
13022	T-22	New Process	540②	5	10
13030	T-30	Fuller	5-A-33②	5	12
13031	T-31	Fuller	5-A-330②	5	12
13032	T-32	Fuller		5	12
13033	T-33	Fuller		5	12
13034	T-34	Fuller		5	12
13035	T-35	Fuller		5	12
13040	T-40	Spicer	4652②	5	13
13041	T-41	Spicer	4753②	5	13
13050	T-50	Fuller	5-A-430②	5	19
13051	T-51	Fuller	5-A-43②	5	19
13059	T-59	Fuller	5-A-620②	5	24
13060	T-60	Fuller	5-A-620②	5	24
13061	T-61	Fuller	5-A-62②	5	24
13062	T-62	Fuller	5-C-65②	5	24
13063	T-63	Fuller	5-C-650②	5	24
13064	T-64	Fuller	5-C-650②	5	24
13065	T-65	Spicer	5652②	5	13
13066	T-66	Spicer	5753②	5	
13068	T-68	Spicer	5652②	5	13
13070	T-70	Fuller	5-C-65②	5	24
13071	T-71	Fuller	5-C-65②	5	24
13072	T-72	Fuller	5-C-65②	5	24
13073	T-73	Fuller	5-C-65②	5	26
13074	T-74	Fuller③	R-35②	7	16
13075	T-75	Fuller③	R-46②	8	17
13076	T-76	Fuller③	R-46S②	8	17
13078, 81	T-78	Fuller	5-C-65②	5	26
13080	T-80	Fuller	10CB-650②	10	31
13081	T-81	Fuller	10CB-65②	10	31
13082	T-82	Spicer	8125②	12	40
13083	T-83	I.H.C.	T-83④	5	28⑤
13085	T-85	I.H.C.	T-85④	5	32
13086	T-86	I.H.C.	T-86④	5	38
13094	T-94	I.H.C.	T-94④	5	34⑤
13095	T-95	I.H.C.	T-95④	5	32
13096	T-96	I.H.C.	T-96④	5	38
13208	T-208	Fuller	5C-720②	5	24
13209	T-209	Fuller	5C-720②	5	24
13210	T-210	Fuller	5C-720②	5	24
13211	T-211	Fuller	5C-72②	5	24
13212	T-212	Fuller	5C-72②	5	24
13214	T-214	Fuller	5W-74②	5	24
13215	T-215	Fuller	5CA-720②	5	24
13216	T-216	Fuller	5CA-720②	5	24
13217	T-217	Fuller	5CA-720②	5	24
13218	T-218	Fuller	5CA-720②	5	24
13219	T-219	Fuller	5WA-74②	5	24

Continued

TRANSMISSION IDENTIFICATION continued

I. H. C. Code①	I. H. C. Model	Mfg's Name	Mfg's Model	No. Speeds	Oil Pints
13220	T-220	Fuller	5A-1120②	5	29
13223	T-223	Spicer	6352②	5	17
13227	T-227	Fuller③	R-660②	10	
13228	T-228	Fuller③	R-63②	10	30
13230	T-230	Fuller③	R-96C②	10	36
13231	T-231	Fuller③	R-960C②	10	36
13232	T-232	Fuller③	R-1150②	10	36
13239	T-239	Fuller	10A-1120②	10	35
13240	T-240	Fuller	10B-1120②	10	35
13245	T-245	Spicer	8041②	4	16
13247	T-247	Fuller	10A-1120②	10	35
13248	T-248	Fuller	10B-1120②	10	35
13250	T-250	Spicer	8045②	4	16
13255	T-255	Fuller	8241②	4	16
13260	T-260	Spicer	8245②	4	16
13265	T-265	Spicer	8051②	5	24
13270	T-270	Spicer	8055②	5	24
13275	T-275	Spicer	8251②	5	24
13276	T-276	Spicer	8251②	5	24
13280	T-280	I.H.C.	T-280	5	24
13281	T-281	I.H.C.	T-281	5	24
13290	T-290	Spicer	6456②	5	
13294	T-294	Spicer	6458②	5	
13295	T-295	Spicer	6458②	5	
13296	T-296	Spicer	6854②	5	17
13501	AT-501	Spicer	5831②	3 Aux.	10
13510	AT-510	Fuller	2-A-45②	2 Aux.	10
13519	AT-519	Spicer	6231②	3 Aux.	8
13520	AT-520	Spicer	6231②	3 Aux.	8
13522	AT-522	Spicer	7231②	3 Aux.	8
13523	AT-523	Spicer	7231②	3 Aux.	8
13524	AT-524	Spicer	6041②	4 Aux.	8
13527	AT-527	Fuller	3-H-65②	3 Aux.	6½
13528	AT-528	Fuller	3-H-65②	3 Aux.	6½
13529	AT-529	Fuller	3-A-65②	3 Aux.	6½
13530	AT-530	Fuller	3-A-65②	3 Aux.	6½
13539	AT-539	Spicer	8031②	3 Aux.	12
13540	AT-540	Spicer	8031②	3 Aux.	12
13545	AT-545	Spicer	8341②	4 Aux.	12
13546	AT-546	Spicer	8341②	4 Aux.	12
13550	AT-550	Spicer	8345②	4 Aux.	12
13551	AT-551	Spicer	8345②	4 Aux.	12
13601	AT-601	Fuller	2A-92	2 Aux.	12
13610	AT-610	Fuller	3A-92	3 Aux.	12
13610	AT-610	Fuller	3B-92	3 Aux.	12
13620	AT-620	Fuller	3T-92	3 Aux.	24
13625	AT-625	Fuller	4M-112	4 Aux.	21
13630	AT-630	Spicer	8035②	3 Aux.	12

①—Code number is listed on Vehicle Inspection Card attached to left sun visor.
②—See the Stock Transmissions Chapter for repairs on this unit.
③—Roadranger transmission.
④—Select-O-Matic transmission.
⑤—Includes torque converter.

gear bushing, locating the tangs of both bus ings in the lock ring.

5. Insert thrust washer pin spring into hole in shaft.
6. Position 3rd gear on bushing with cone toward front.
7. Slide on front thrust washer with machined face toward gear. While holding down pin with a thin punch through hole in gear cone, push thrust washer over pin. Turn washer to allow pin to engage one of the splines, Fig. 9. Check to see that gear end play is .003″ to .005″. Select and fit a thrust washer of the required thickness to establish this end play.
8. Fit three springs and poppet balls into front synchronizer unit and install 3rd and 4th sliding sleeve on synchronizer unit.
9. Insert 3rd and 4th gear spacer into synchronizer and slide unit onto mainshaft.
10. Install three springs and poppet balls in rear synchronizer and slide 1st speed gear on synchronizer unit.
11. Slide unit together with 2nd gear spacer onto splines of shaft.
12. Press mainshaft rear bearing into its housing and fit it to the shaft with the outer flange of the housing toward the rear.
13. Install speedometer drive gear spacer on mainshaft.
14. Insert speedometer drive gear key in mainshaft groove.
15. Install speedometer drive gear.
16. Install lockwasher and nut on mainshaft.

Assemble Countershaft

1. Insert snap ring into innermost groove in gear cluster.
2. Insert countershaft in vertical position in a vise with notched end down. Coat shaft lightly with chassis lube. Then position bearing ring over shaft and against vise jaws. Position needle rollers around shaft and install a second bearing ring.
3. Slide gear unit over shaft and bearing with large gear downward.
4. Remove shaft from vise, push bearing up against snap ring and secure in position with second snap ring.
5. Install outer needle roller bearing and retaining snap ring.
6. Slide countershaft bearing spacer into gear unit from rear end. Install rear needle roller bearing and secure with snap ring.
7. Temporarily install countershaft, cluster gear and thrust washers in case, using aligning tool as shown in Fig. 10. Then check end play of unit which should be .001″ to .003″. Select a rear thrust washer of the required thickness to establish this end play. Then remove shaft and thrust washers and allow gear unit to rest in bottom of case.

Assemble Main Drive Gear

1. Install bearing on main drive gear with its snap ring furthest from gear. Install lockwasher, tighten retaining nut and bend over locking tab.

2. Place main drive gear assembly into front of case, making sure snap ring rests against case.
3. Coat bore of main drive gear with chassis lube and install 18 needle bearings.

Assemble Transmission

1. Insert assembled mainshaft from rear. There is a dowel in rear bearing housing and this can be located with aid of gasket fitted between case and extension before housing is pressed into rear of case.
2. Press rear bearing housing into case, at the same time entering the mainshaft into the main drive gear pilot bearings.
3. Install countershaft through gear unit and thrust washers, using aligning tool shown in Fig. 10. Line up notched portion at front end of shaft with locating groove in front cover.
4. Insert 1st and 2nd speed shift with ball and spring held in position with aid of pilot bar, Fig. 11.
5. Insert 3rd and 4th shift fork with ball and spring also held in position with pilot bar.
6. Tap 3rd and 4th speed shift bar with

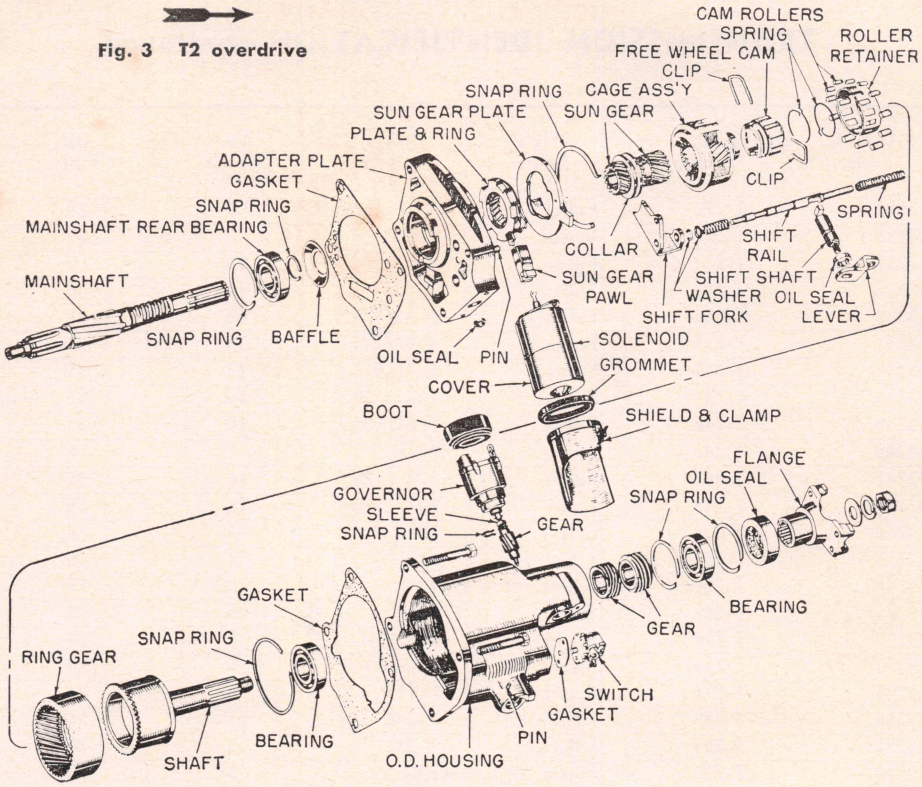

Fig. 3 T2 overdrive

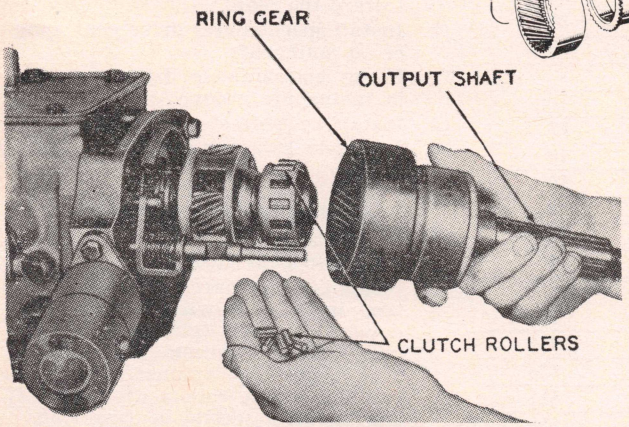

Fig 4. Removing output shaft and ring gear

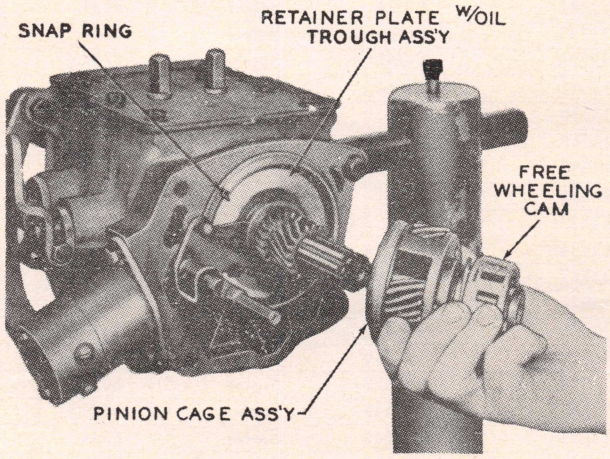

Fig. 5 Removing free wheeling shaft and pinion cage

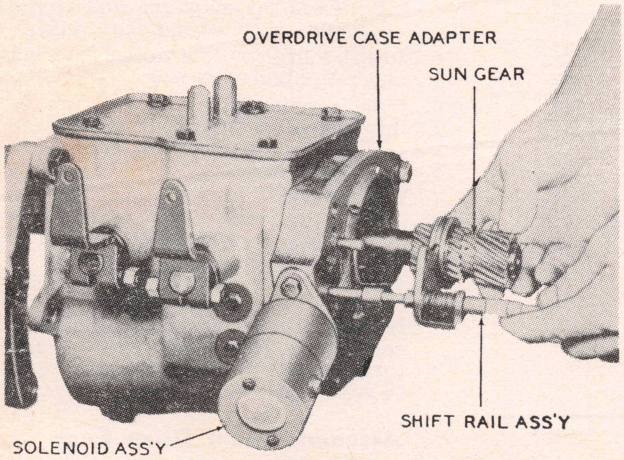

Fig. 6 Removing sun gear and shift rail

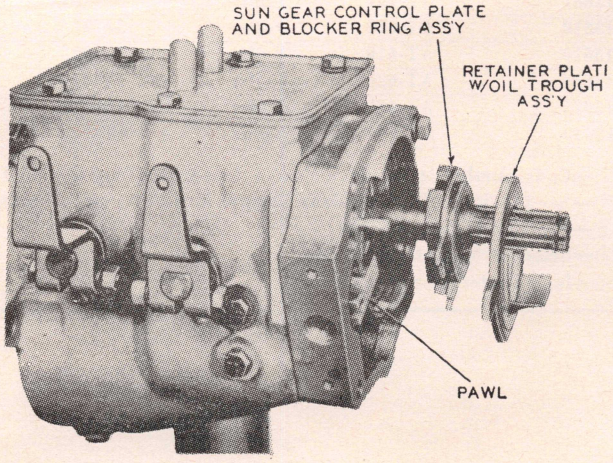

Fig. 7 Removing retainer plate, pawl, and sun gear control plate

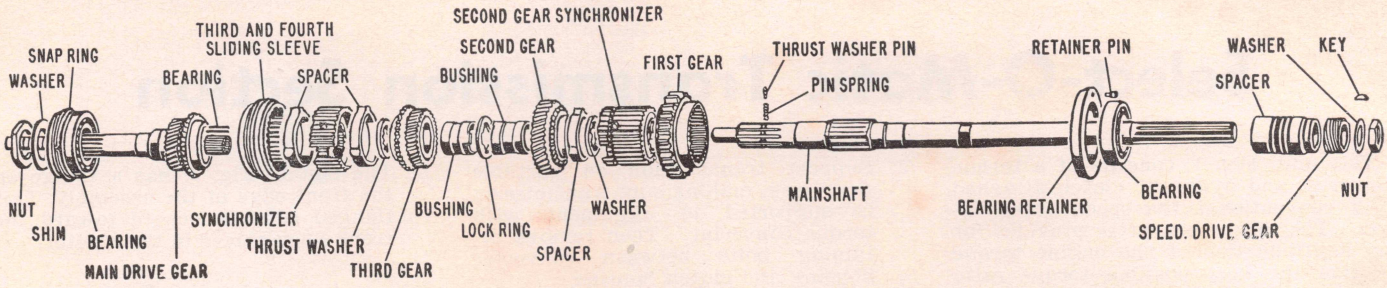

Fig. 8 Main drive line of T-12 transmission

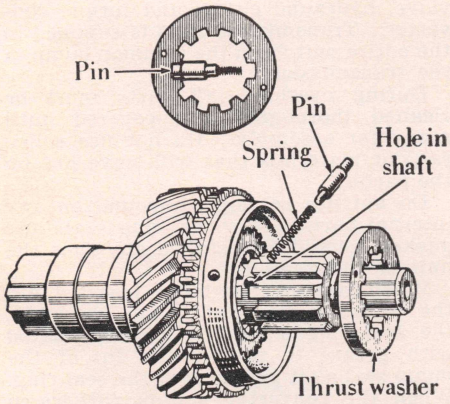

Fig. 9 Installation of front thrust washer over locating pin on mainshaft. Model T-12

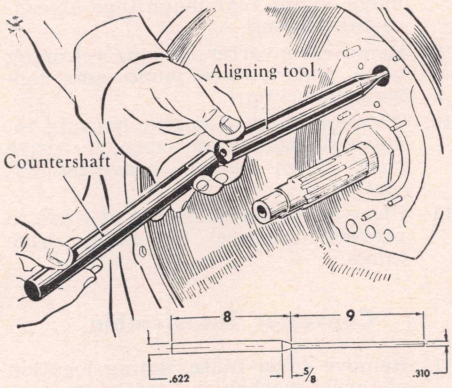

Fig. 10 Aligning tool used as pilot when installing countershaft. Make tool to dimensions shown. Model T-12

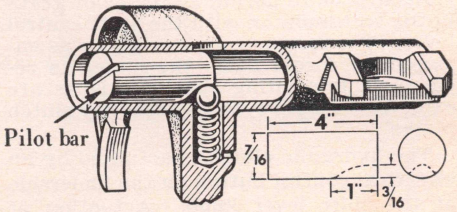

Fig. 11 Preloading shift fork ball and spring with pilot bar shown. Make pilot bar to dimensions shown. Model T-12

its slotted end toward rear of case, removing pilot bar.

7. Repeat same operation with 1st and 2nd speed shift fork and bar. This shaft has three grooves at its rear end.
8. Install reverse gear and shaft into case and secure shaft with set screw and lockwasher.
9. Install reverse gear shift fork, spring, ball and shift bar. This bar has two grooves at its rear end.
10. Position shift bar locating strip in rear of case.
11. Position speed change fork on speed change shaft and install lock pin, lockwasher and nut.
12. Position operating lever in speed change fork and install fulcrum pin. Tighten pin until lever is just snug between fork jaws and then back off 1/6 turn before securing pin with washer and nut. This lever should be free but without side movement. Position spacer washer over end of speed change shaft and install shaft into case.
13. Install inner lever on selector cross shaft and secure with taper pin. Position cross shaft with lever in case.
14. At the same time that shafts are placed in case, the change speed gate should be threaded over levers and entire assembly installed in case as a unit. The gate is located in position by its rounded ends in the machined recesses of side cover.
15. Install speedometer drive gear on mainshaft.
16. Install extension housing and new gasket on case.
17. Install side cover and new gasket.
18. Position new felt washers and oil seals to selector and speed change cross shaft.
19. Install main drive gear bearing shims and install front cover with new gasket, making sure bearing snap ring is held against transmission case.
20. Install clutch withdrawal lever, renewing the rubber dust cover if necessary.
21. Install selector shaft outer lever and secure with nut, washer and lock pin.
22. Install speed change shaft outer lever with nut, washer and lock pin.

Select-O-Matic Transmission Section

This unit, Fig. 1, consists of a torque converter and hydraulic clutch attached to a conventional five-speed transmission. The torque converter provides for the multiplication of the engine torque to give the best possible torque ratio for the various driving conditions encountered in starting, acceleration and high speed operation. The hydraulic clutch provides the break in the drive line between the torque converter and transmission to permit a change of gears in the transmission with the shift control lever. The torque converter dampens engagement forces when the clutch is reengaged, preventing shock loads as are experienced with typical direct dry clutch plates.

The hydraulic clutch is actuated by an electrical control button on the underside of the shift lever knob. Actuation of the button grounds the electrical circuit containing the solenoid valve, opens the valve and releases the oil pressure in the clutch assembly. This action frees the driven member, thereby releasing the drive line torque.

Transmission and Converter, Replace

1. Drain transmission and converter.
2. Remove gearshift lever, leaving control cover in place. After lever is removed, seal lever opening to prevent entry of dirt.
3. Disconnect solenoid control wire.
4. Disconnect propeller shaft at rear of transmission.
5. Support transmission on portable floor jack, making sure transmission is supported in alignment with torque converter. Then remove retaining bolts between converter housing and clutch housing.
6. Separate transmission from converter.
7. Remove clutch assembly, Fig. 2.
8. Support rear end of engine and remove engine rear mountings at converter housing.
9. Remove converter housing retaining bolts and remove pump and converter housing.
10. Through front of engine housing remove six bolts from converter drive plate. Then remove converter assembly.
11. Place converter on blocks of wood to prevent damage to pump drive tangs.

Converter Disassemble

1. Remove cover plate, noting location of thrust washer and seal ring.
2. Lift turbine from pump.
3. Remove reactor (stator), noting that the thick section of the blades are up.
4. Disassemble reactor unit. Remove bearing, clutch inner race and clutch assembly. Note that the reactor blade unit rotates in a clockwise direction when the clutch inner race is held stationary with the thick section of the reactor blades up.
5. The clutch, Fig. 3, has a flange on the front edge of the assembly. This flanged edge is located toward the front when placed in the reactor.

Inspection of Parts

Unless the units are free of dirt, operating difficulties might be expected since any dirt present in the assembly will circulate through the oil pump, solenoid valve, hydraulic clutch and torque converter. Transmission fluid is supplied to the entire unit from the common sump in the transmission.

During overhaul, all parts must be cleaned thoroughly and covered until ready for assembly. Do not use soiled rags or materials that will leave lint on the parts.

Do not use sealing compound on any internal parts. New "O" ring seals and gaskets should be installed any time the unit is disassembled.

When the converter hub is inserted into the collector ring and pump assembly, the seal ring should be heavily coated with grease to protect the lip of the pump seal as it passes over the seal ring. When the converter hub is withdrawn from the collector ring the lip of the seal will be damaged by the seal ring and for this reason must always be replaced.

Converter, Assemble

1. Place reactor on rear bearing.
2. Insert clutch in reactor unit with flange on clutch towards thicker section of blades, Fig. 3.
3. Insert inner race with turning motion in counterclockwise direction. Snap ring located in race must be up. Use wood blocks when tapping bearings in place.
4. Place reactor in pump. Note that reactor must rotate clockwise with reactor race held stationary.
5. Install turbine in pump.
6. Place new seals in cover plate.
7. Place thrust washer in cover plate, oil groove up. Use light coating of grease to hold washer in place.
8. Install cover plate on pump. Position drain holes in converter so they clear drive plate. Tighten bolts alternately across bolt circle to a torque of 15-18 lb. ft.

Pump, Disassemble

1. Remove solenoid and control valve from pump, Fig. 4. Use new seals when reassembling pump. Tighten bolts to a torque of 10-12 lb. ft.
2. Separate pump from collector ring.
3. Disassemble pump, Fig. 5.
4. The pressure regulator plunger parts are removed by extracting the roll pin from the pump housing. These parts can be removed for cleaning purposes, Fig. 6. The spring should be replaced if it does not measure 1.272". Examine the valve or plunger for wear or scored surface. Replace

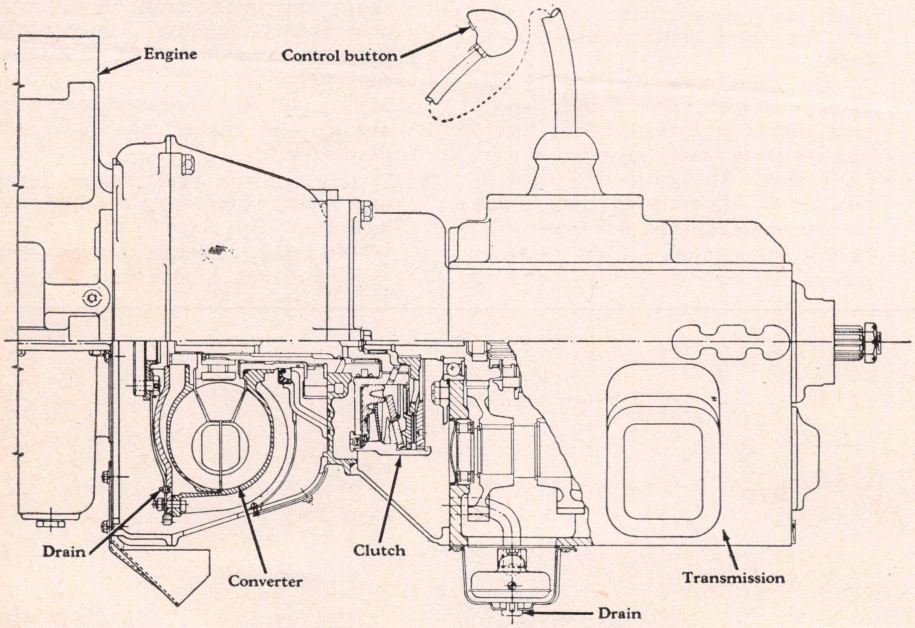

Fig. 1 Sectional view of torque converter and hydraulic clutch attached to transmission

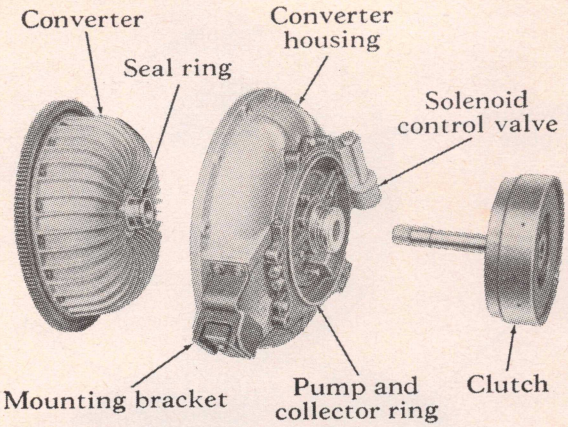

Fig. 2 Rear view of separated converter units

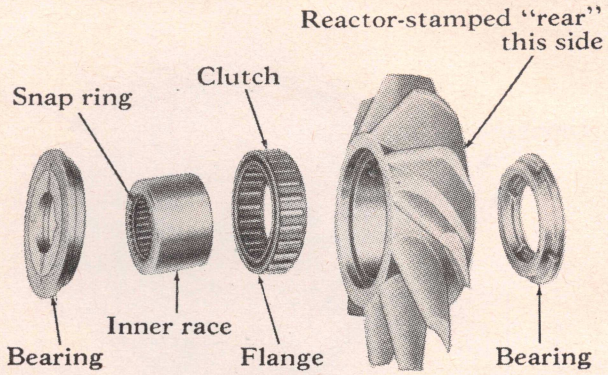

Fig. 3 Stator (or reactor) components

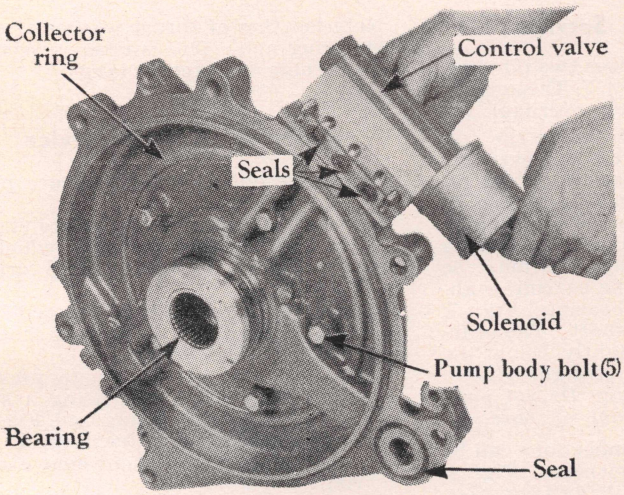

Fig. 4 Removing clutch control valve from collector ring. Note location of "O" ring seals

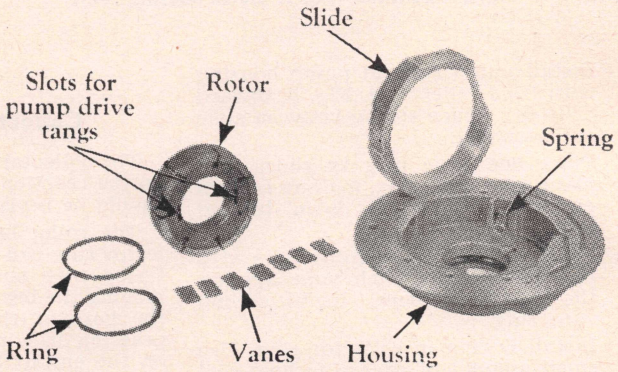

Fig. 5 Layout of pump parts

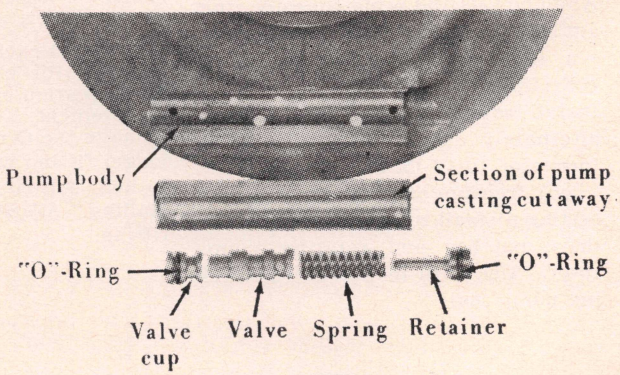

Fig. 6 Pressure regulator valve components

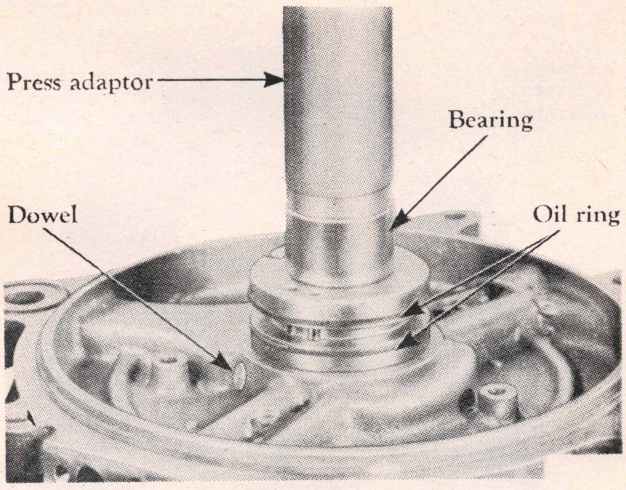

Fig. 7 Pressing bearing into reaction shaft. The dowel shown secures shaft to casting and is not to be removed

pump housing if valve is rough or in any way damaged. A scored plunger would indicate damage to the plunger bore in the pump housing. The O ring is installed on the spring seat or retainer.

Pump, Assemble

1. Press new pump seal to its seat in housing.
2. Install pressure regulator valve parts, Fig. 6. The roll pin secures these parts in pump housing.

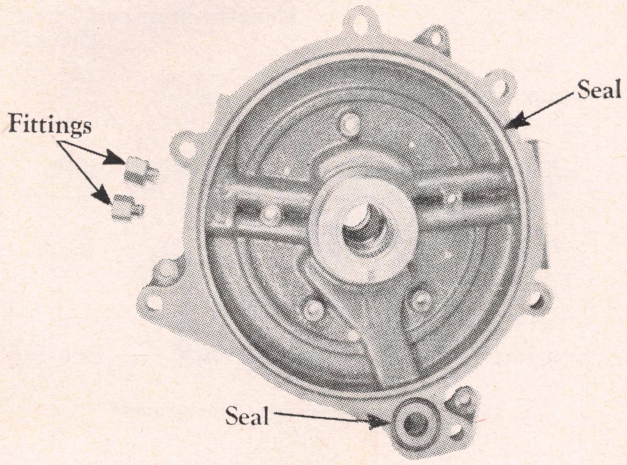

Fig. 8 Collector ring-to-clutch housing seals

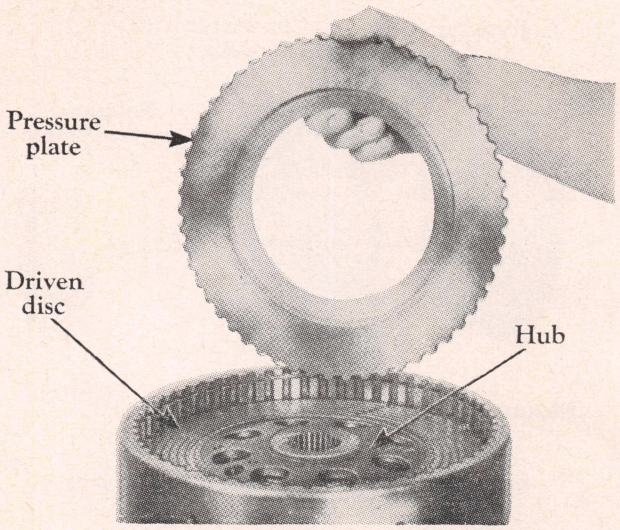

Fig. 9 Outer pressure plate removed

3. Install pump slide in pump housing with fluid relief hole, Fig. 5, toward housing. Place spring between slide and housing.
4. Place one vane ring in slide, then place rotor over ring, making certain pump drive slots are "down" toward seal.
5. Place pump vanes in rotor slots with polished edge of each vane against the slide inside bore. Install second vane ring.
6. Install O ring in collector ring. Use small amount of grease to hold seal in position.
7. With pump assembly facing "up", lower collector ring and reaction shaft down into pump assembly. Align dowels and bring collector ring against pump carefully. Make sure seal has not fallen from groove in collector ring.
8. Install retaining bolts and tighten alternately across bolt circle to a torque of 10-12 lb. ft.
9. Check freedom of pump rotor by inserting a small rod carefully in rotor drive notches and rotating pump rotor. Use care to prevent damaging pump seal.

Collector Ring Service

The collector ring utilizes two oil rings on the reaction shaft, Fig. 7. These rings should be replaced at each overhaul.

The roller bearing located in the collector ring can be removed. However, extreme care must be observed when removing the bearing to prevent damage to the bore of the reaction shaft. When pressing in a new bearing the lettering on the end of the bearing race must be up. Make certain that the bearing is absolutely clean. Press bearing, Fig. 7, flush to face of reaction shaft. The bearing must be flush or slightly below the face of the shaft. Use a straight edge to check the bearing location. *Do not push bearing hard into bottom of bore.*

The heat exchanger connections can be removed for cleaning purposes, Fig. 8. Note location of longer fitting for proper replacement. Also be careful not to damage the O ring seal at the end of the longer fitting when replacing. Use grease to help slip rings over threads when installing. Washers are used under each fitting.

Note location of thrust washer at converter ring hub. This washer is secured from turning by internal tangs.

Converter Clutch Service

1. Remove outer clutch pressure plate snap ring.
2. Lift out pressure plate. Note undercut face of pressure plate which is reassembled towards clutch driven disc, Fig. 9.
3. Remove clutch driven disc and hub. The longer hub section of hub is towards clutch shaft.
4. Support clutch in press to prevent damage to shaft and, using a suitable spring compressing tool, Fig. 10, remove spring load from spring retainer snap ring. Then remove snap ring.
5. Release press pressure and remove spring retainer, spring and inner pressure plate. Note that the pressure plate return spring is installed "dished side down".
6. Lift out clutch release lever assembly. Note location of rolled edge

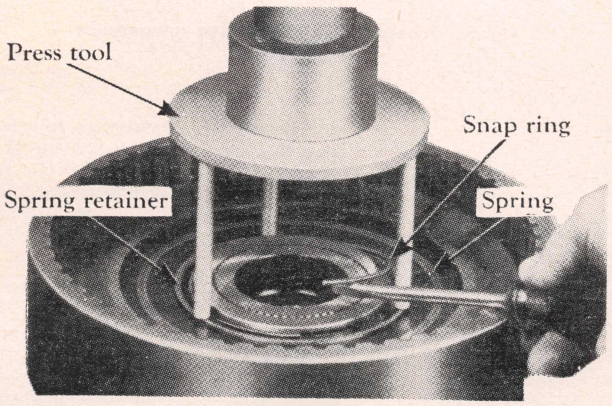

Fig. 10 Removing spring retainer snap ring

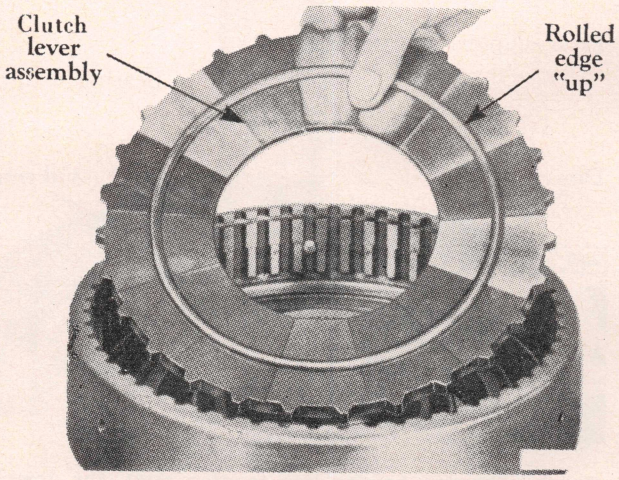

Fig. 11 Clutch lever removal

of release lever retainer ring. The rolled edge is facing "up".

7. Remove clutch baffle plate retainer snap ring.
8. Remove baffle plate and piston return spring. Piston return spring is installed "dished side up".
9. Lift out piston assembly.
10. Remove piston oil seal ring from clutch drum hub and remove piston ring.
11. The mainshaft pilot bearing can be removed using a hooked tool working around the diameter of the bearing race to prevent binding. Remove thrust bearing and thrust washer.
12. When installing pilot bearing, be sure thrust washer is placed in bottom bore first. The thrust bearing follows, and then the pilot (roller) bearing. Press pilot bearing 1/16″ beyond face of clutch drum hub with bearing identification mark "up".
13. Reassembly of the clutch is the reverse of disassembly.

Checking Fluid Level

1. Run engine at idle speed until normal operating temperature is reached.
2. With shift lever in neutral, add fluid to bring level up to Full mark on gauge.
3. Check fluid on gauge immediately after stopping engine. This permits more accurate fluid level measurement.
4. Use only Automatic Transmission Fluid.

Changing Fluid

1. Drain fluid every 15,000 miles.
2. Run engine until it reaches normal operating temperature.
3. Stop engine, remove transmission fluid pan drain plug on the bottom of the transmission and drain.
4. Rotate converter until one drain plug appears at the lower opening of the converter housing. Loosen this plug so it acts as a vent. Then rotate the converter 180° and remove the other drain plug.
5. After draining, install and tighten all drain plugs.
6. Pour specified amount of fluid (see Transmission Index chart) in transmission.
7. Start engine and run it at idle for one minute to transfer the fluid from the transmission to the converter.
8. With engine still idling and shift lever in neutral, slowly add enough Automatic Transmission Fluid to bring the level up to the Full mark.

SELECT-O-MATIC TRANSMISSIONS

Models T-85, T-86, T-95, T-96

1. Remove shift lever housing.
2. Remove transmission companion flange with puller.
3. Remove mainshaft rear bearing cap.
4. Remove speedometer drive gear or spacer.

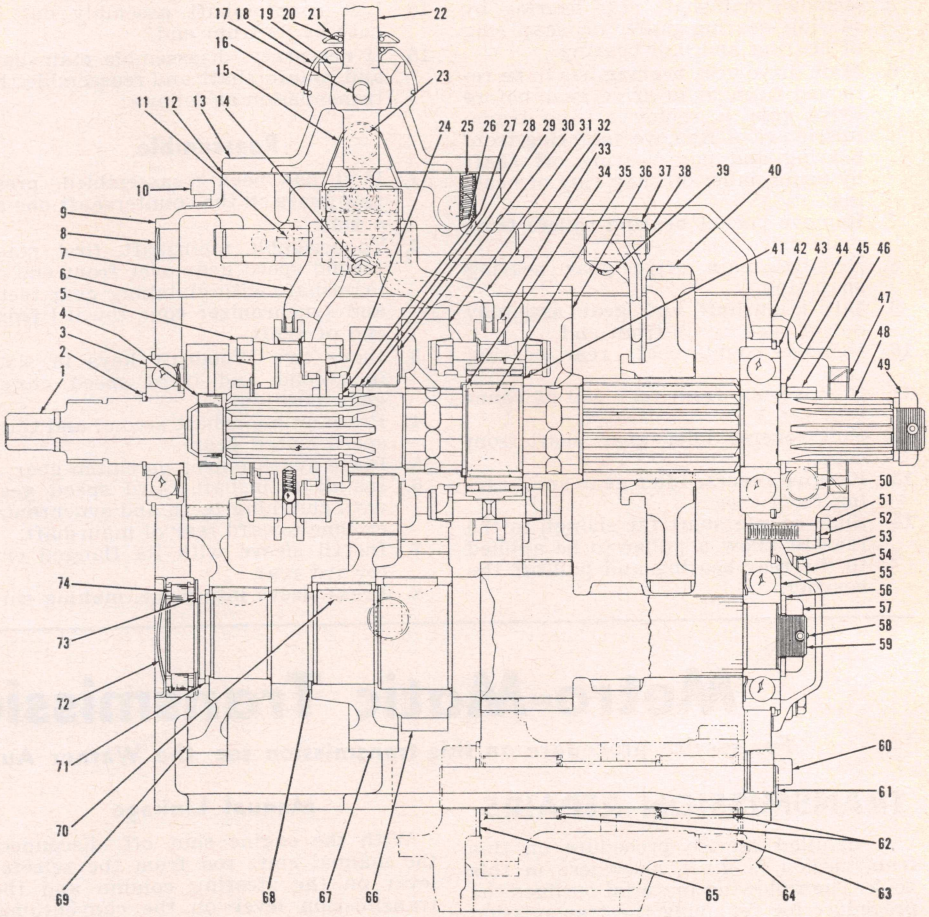

Fig. 12 Sectional view of transmission used with torque converter and hydraulic clutch. Models T85, T86, T95, T96

1. Main drive gear
2. Bearing snap ring
3. Bearing
4. Pilot bearing rollers
5. Synchronizer
7. Shift fork
8. Shift bar plug
9. Shifter housing
10. Breather
11. Poppet spring
13. Control housing
14. Set screw
15. Shift finger
16. Snap ring
17. Control lever pin
18. Dust cover
19. Washer
20. Spring
21. Spring retainer
22. Control lever
23. Bolt
24. Thrust washer
25. Poppet spring
26. Poppet ball
27. Snap ring
28. Pin
29. Sleeve
30. Fourth speed gear
31. Third speed gear
32. Shift fork
33. Synchronizer
34. Snap ring
35. Woodruff key
36. Second speed gear
37. Shift fork
38. Shift bar
39. Set screw
40. Sliding gear
41. Clutch gear
43. Bearing
44. Bearing retainer
45. Spacer
46. Speedometer gear
47. Seal
48. Mainshaft
50. Adapter
55. Bearing
56. Washer
59. Countershaft
60. Drain plug
61. Reverse idler shaft
62. Bearing
63. Reverse idler gear
64. Case
65. Washer
66. Third speed gear
67. Fourth speed gear
68. Snap ring
69. Drive gear
70. Key
71. Snap ring
72. Plug
73. Thrust washer
74. Bearing

5. Remove mainshaft rear bearing by placing bearing puller on snap ring of bearing and pull bearing.
6. Main drive gear bearing has to be removed from main drive gear before drive gear is removed from transmission case. Remove snap ring from bearing and pull bearing off shaft by using puller on snap ring of bearing.
7. Remove pocket bearing rollers from main drive gear.
8. Remove main drive gear bearing snap ring.
9. Lift mainshaft and gear assembly out of case by its front end.
10. Remove countershaft rear bearing cap.
11. Remove nut from rear end of countershaft.
12. Pull reverse idler gear shaft from case.
13. Remove reverse idler gear and bearing from case.
14. Slide countershaft far enough to the rear to allow a puller to be applied to the rear bearing and pull off the bearing.
15. Lift countershaft assembly out of case by its front end.
16. If necessary, disassemble mainshaft and countershaft and reassemble the transmission as follows:

Reassemble

1. If it has been disassembled, press new gears on the countershaft one at a time.
2. To assemble mainshaft, first place second speed gear over front end of mainshaft with clutching gear teeth and synchronizer cone toward front end of shaft.
3. Place two Woodruff keys in slots in second and third speed clutch gear positions.
4. Press on mainshaft second and third speed clutch gear.
5. Place synchronizer on clutch gear.
6. Install mainshaft third speed gear with clutching teeth and synchronizer cone toward rear of mainshaft.
7. Install sleeve with its flanged end toward rear.
8. Press sleeve into place, making sure notches in sleeve are located in correct position with Woodruff keys.
9. Install fourth speed (or overdrive) gear thrust washer on front of mainshaft and slide down splines into proper location against gear.
10. Place snap ring over front end of mainshaft into groove provided.
11. Install fourth and fifth speed synchronizer on mainshaft. When transmission is overdrive on fifth speed, the large diameter synchronizer cone is assembled toward front; when fifth is direct drive the small diameter synchronizer cone faces the front.
12. Install first and reverse sliding gear on splines on rear of mainshaft with shift fork collar toward front of mainshaft.
13. Assemble main drive gear.
14. Install countershaft assembly.
15. Install reverse idler gear assembly.
16. Install mainshaft assembly.
17. Complete the assembly of the transmission by reversing the order of its disassembly.

Metro-Matic Transmission Section

For service procedure on this transmission see the Warner Automatic transmission chapter

TRANSMISSION REPAIRS

A detailed service procedure on this transmission is given elsewhere in this book. The following material outlines the procedure for removing the transmission from the vehicle and service adjustments.

SERVICE ADJUSTMENTS

The adjustments given should be performed in the order in which they appear. Be sure that all specifications are closely adhered to.

Engine Idle Speed

Place the selector lever in Neutral and start the engine. Run the engine at idle speed until normal operating temperature is reached. Check the engine idle speed with a tachometer and, if necessary, adjust to 350-400 rpm.

If the anti-stall dashpot holds the throttle open and prevents the correct idle speed adjustment, loosen the lock nut and turn the dashpot adjusting screw in (clockwise) until the correct idle speed is reached.

Anti-Stall Dashpot

After the engine idle speed has been properly adjusted, shut off the engine and adjust the anti-stall dashpot.

Holding the throttle in the closed position, turn the dashpot adjusting screw out (counterclockwise) until the head of the screw pushes the dashpot rod up to the end of its travel. Hold the dashpot rod in this position and back off the adjusting screw four turns to obtain .100" clearance between adjusting screw and dashpot rod when the rod is fully compressed.

Manual Linkage

With the engine shut off, disconnect the manual shift rod from the selector lever on the steering column and the transmission lever on the conventional chassis, or bellcrank on the Metro Chassis.

Position the selector lever so the indicator is down against its stop in the "D" (drive) position. Place the transmission manual lever in the "D" detent (second from top of transmission).

Position the manual shift rod into the ball joint on the steering column. The opposite end of the rod should be installed in the transmission shift lever on the conventional chassis and secured with a washer and cotter pin. On the Metro chassis, the rod yoke should be positioned on the bellcrank and secured with a clevis pin, washer and cotter pin. Then tighten the ball joint nut at the steering column lever.

Move the selector lever through all positions, checking the alignment of the pointer in all positions.

Starter Neutral Switch

Check the starter circuit in all selector lever positions. The circuit must be open in all positions except "N" and "P". To adjust, loosen the neutral switch-to-steering column attaching screws. Position the switch so that the starter circuit is closed when the selector lever is at "N" or "P".

Kickdown Switch

The kickdown switch is located in the toeboard under the throttle treadle on the conventional chassis, while on the Metro chassis, the switch is mounted on a bracket under the toeboard and operated by a pad welded to one of the throttle linkage rods.

To adjust the switch on conventional chassis models, loosen the two nuts, one below and one above the toeboard. Turn the upper nut clockwise or counterclockwise to obtain the proper clearance of approximately ¼" between the switch and throttle treadle when the carburetor throttle plates are wide open.

On Metro chassis, perform the same adjustment except the ¼" clearance will be between the pad welded on the throttle linkage and kickdown switch.

Vacuum Control Unit

The vacuum control unit, located at the rear of the transmission, should be checked for proper adjustment as follows:

1. Connect a tachometer on engine.
2. Remove ⅛" pipe plug on left side of case near front of transmission.
3. Install pressure gauge connector at this location, then connect the pressure gauge inside the cab.
4. Start engine and move selector lever to "D" position.
5. Apply hand and service brakes and accelerate the engine until 1000 rpm is reached. The pressure gauge reading should be 82-88 lbs.
6. If the correct pressure is not obtained, it will be necessary to adjust the vacuum control unit. This is done by loosening the lock nut and rotating the unit. Rotating the unit clockwise increases the pressure, and vice-versa. Adjust the unit to obtain the correct pressure and tighten the lock nut. *Do not operate the engine over 10 seconds at any one interval when performing the above test.*

TRANSMISSION, REPLACE

1. Disconnect fluid filler tube at oil pan and drain fluid. Loosening the tube clip capscrew at the extension on the starting motor will permit rotating the filler tube for transmission removal.
2. Disconnect vacuum line at vacuum unit at rear of transmission.
3. Disconnect speedometer cable at transmission.
4. Disconnect hand brake cable at drive shaft brake if chassis is so equipped.
5. Disconnect shift linkage at transmission.
6. Disconnect two oil cooler lines on right side of transmission if chassis is so equipped.
7. Disconnect propeller shaft at transmission companion flange. Wire end of propeller shaft to frame to permit transmission removal.
8. Support transmission with suitable hoist or cradle.
9. Remove transmission - to - converter housing upper capscrews and insert guide studs in the holes.
10. Remove lower capscrews and pull transmission rearward and remove from under chassis.
11. Reverse the foregoing procedure to install the transmission. However, be sure to align the turbine shaft splines with the turbine hub splines, and the converter impeller lugs with the slots in the front pump drive gear.

Rear Axle Section

For Eaton and Timken (Rockwell) driving axles used on International trucks, see the "name" chapter for service procedures

I. H. C. Code ①	I. H. C. Model	Mfg's Name ②	Axle Type ③	Oil Pints
14001	RA-1⑭	Spicer	S. R.	3
14002	RA-2⑭	Spicer	S. R.	2
14003	RA-3⑭	Spicer	S. R.	3
14005	RA-5⑭	Spicer	S. R.	4
14006	RA-6⑭	Spicer	S. R.	4
14010	RA-10⑭	Spicer	S. R.	4
14011	RA-11⑭	Spicer	S. R.	4
14015	RA-15	Timken	S. R.	6
14020	RA-20	Timken	S. R.	6
14025	RA-25	Timken	S. R.	8
14026	RA-26	Timken	S. R.	8
14030	RA-30	Timken	S. R.	8
14031	RA-31	Timken	S. R.	8
14032	RA-32	Timken	S. R.	8
14033	RA-33	Timken	S. R.	8
14035	RA-35	Timken	S. R.	11
14040	RA-40	Timken	S. R.	12
14044	RA-44	Timken	S. R.	17
14045	RA-45	Timken	S. R.	22
14046	RA-46	Timken	S. R.	24
14047	RA-47	Timken	S. R.	24
14050	RA-50	Timken	S. R.	21
14055	RA-55	Timken	S. R.	24
14056	RA-56	Timken	S. R.	23½
14057	RA-57	Timken	S. R.	23½
14060	RA-60	Timken	S. R.	23
14065	RA-65	Timken	S. R.	31
14070	RA-70	Timken	S. R.	28
14120	RA-120	Eaton	2 Sp.	13
14125	RA-125	Eaton	2 Sp.	11
14126	RA-126		2 Sp.	13
14127	RA-127		2 Sp.	13
14128	RA-128		2 Sp.	13
14130	RA-130	Eaton	2 Sp.	11
14131	RA-131	Eaton	2 Sp.	11
14135	RA-135	Eaton	2 Sp.	16
14136	RA-136		2 Sp.	20
14138	RA-138		2 Sp.	20
14139	RA-139	Timken	2 Sp.	
14140	RA-140	Timken	2 Sp.	26④
14143	RA-143		2 Sp.	16
14145	RA-145	Eaton	2 Sp.	18
14146	RA-146	Eaton	2 Sp.	22
14147	RA-147		2 Sp.	22
14150	RA-150	Eaton	2 Sp.	22
14151	RA-151	Eaton	2 Sp.	28½
14152	RA-152	Eaton	2 Sp.	28½
14155	RA-155	Eaton	2 Sp.	24
14156	RA-156	Eaton	2 Sp.	29½
14157	RA-157	Eaton	2 Sp.	29½
14158	RA-158		2 Sp.	
14160	RA-160	Eaton	2 Sp.	29
14161	RA-161	Timken	2 Sp.	29④
14162	RA-162	Timken	2 Sp.	
14165	RA-165	Timken	2 Sp.	29④
14166	RA-166	Timken	2 Sp.	29
14167	RA-167	Timken	2 Sp.	29
14170	RA-170	Timken	2 Sp.	34④
14171	RA-171	Timken	2 Sp.	51½
14172	RA-172	Timken	2 Sp.	51½
14175	RA-175	Timken	2 Sp.	37④
14180	RA-180		2 Sp.	32
14181	RA-181	Eaton	2 Sp.	29
14245	RA-245	Eaton	D. R.	22
14246	RA-246		D. R.	22
14250	RA-250	Eaton	D. R.	22
14252	RA-252		D. R.	28.5
14270	RA-270	Timken	D. R.	36④
14273	RA-273	Timken	D. R.	34
14275	RA-275	Timken	D. R.	38④
14276	RA-276	Timken	D. R.	38
14290	RA-290	Timken	D. R.	
14301	RA-301	Eaton	T. S. R.	11 Each⑤
14305	RA-305	Eaton	T. S. R.	14 Each⑤
14310	RA-310	Eaton	T. S. R.	⑥
14315	RA-315	Timken	T. D. R.	28 Each⑦
14320	RA-320	Eaton	T. S. R.	⑨
14318	RA-318	Timken	T. S. R.	⑧
14319	RA-319	Timken	T. S. R.	⑩
14320	RA-320	Eaton	T. S. R.	⑨
14328	RA-328	Timken	T. S. R.	⑪
14330	RA-330	Timken	T. D. R.	22 Each⑦
14332	RA-332	Timken	T. D. R.	⑬
14333	RA-333	Timken	T. S. R.	⑫
14334	RA-334	Timken	T. S. R.	⑫
14346	RA-346	Timken	T. S. R.	⑪

See page 800 for footnotes

FOOTNOTES FOR REAR AXLE INDEX

①—Code number is listed on Vehicle Specification Card attached to left sun visor.
②—See Rear Axles Chapter for repairs on Timken and Eaton Axles.
③—S. R.: Single reduction. D. R.: Double reduction. 2 Sp.: Two speed. T. S. R.: Tandem drive single reduction. T. D. R.: Tandem drive double reduction.
④—Add 1 pint to pinion cage when new or reconditioned drive unit is installed.
⑤—Power divider 6½ pints.
⑥—Forward axle 28, rearward axle 33, power divider 3.
⑦—Interaxle differential 2 pints.
⑧—Forward axle 27, rearward 24, interaxle differential 2.
⑨—Forward axle 20, rearward 21, power divider 2.
⑩—Forward axle 31, rearward 32, interaxle differential 2.
⑪—Forward axle 31½, rearward 32, interaxle differential 2.
⑫—Forward axle 34, rearward 31, interaxle differential 2.
⑬—Forward axle 34, rearward 36, interaxle differential 2.
⑭—See Scout Chapter for Service Procedure.

Steering Gear Section

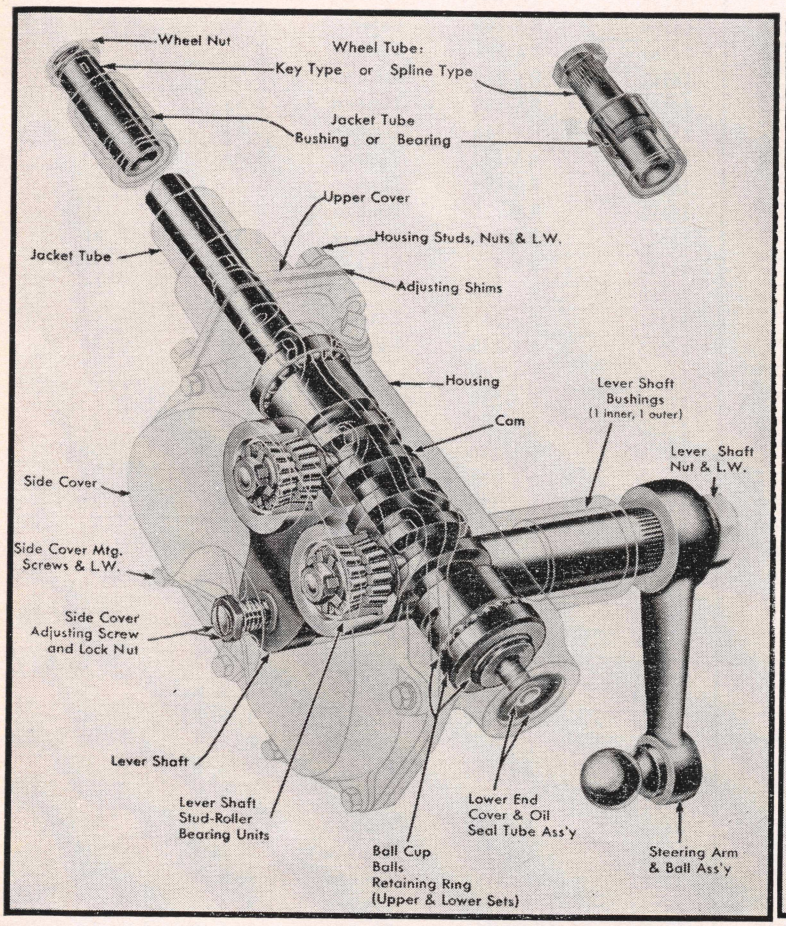

Fig. 2 Ross cam and lever steering gear with bearing mounted twin studs

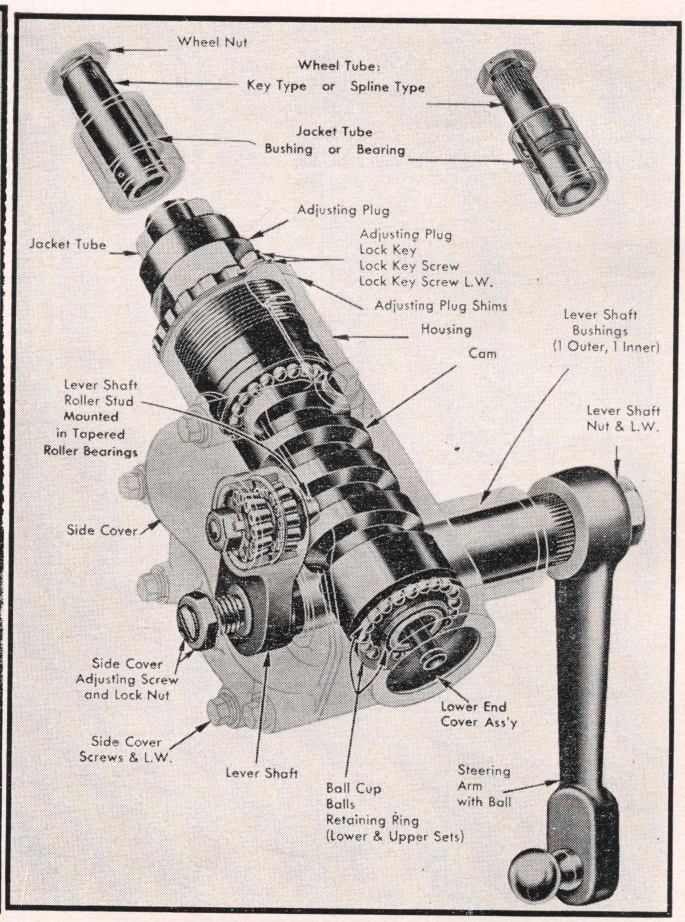

Fig. 3 Ross cam and lever steering gear with bearing mounted single stud

ROSS CAM & LEVER

These steering gears, Figs. 1, 2 and 3 are of the cam and lever type in which the cam is mounted on ball bearings and the lever shaft turns on steel backed bronze bushings.

As the cam is turned by the wheel tube, the follower stud or studs are pulled along the cam groove causing the lever arm to rotate the lever shaft. As an aid to easy steering the lever shaft stud or studs which engage the cam are mounted on tapered roller bearings. The groove in the cam is cut shallower in the straight-ahead driving position to provide closer adjustment between the studs and cam where most of the steering action occurs.

Cam End Play, Adjust

Free the steering gear of all load by disconnecting the drag link and loosening the steering column braces. Then adjust as follows:

Twin Stud Gears—Loosen the lock nut and adjusting screw in the side cover to free the studs in the cam groove. Remove the upper cover stud nuts and raise the housing upper cover to permit removal of adjusting shims, which are .002″, .003″ and .010″ thickness. Clip and remove one thin shim, tighten down the cover and check the adjustment. There should be a slight drag but the steering wheel should turn freely with the thumb and forefinger lightly gripping the rim. If necessary, remove or replace shims until the adjustment is correct.

Single Stud Gears—Loosen the housing side cover adjusting screw to free the stud in the cam groove. Turn down the cam adjusting plug, located at the top of the gear housing, until there is a barely perceptible drag so that the steering wheel can be turned freely with the thumb and forefinger lightly gripping the rim.

Lever Shaft Backlash, Adjust

1. Centralize the steering gear by turning the wheel all the way to the right. Then starting from this point count the number of turns required to reach the end of travel to the left. Turn the wheel back half this number of turns to the mid-position.
2. Tighten the side cover adjusting screw until a very slight drag is felt through the mid-position when turning the steering wheel slowly from one side to the other. The gear should not bind in any position but a slight drag should be felt in the mid-position only.
3. After proper adjustment is secured, tighten the lock nut and give the gear a final check for binding.

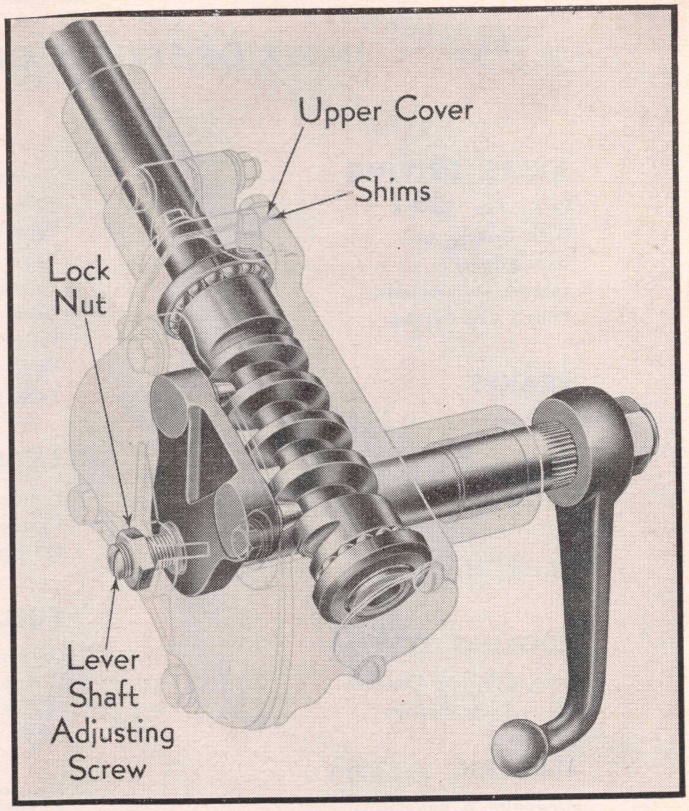

Fig. 1 Ross cam and lever twin stud steering gear

Stud Roller Bearing, Adjust

In most cases the foregoing adjustments will be adequate but it is sometimes necessary to adjust the stud roller bearing units as they should be preloaded at all times. A heavy drag should be felt when revolving the studs by hand. If a torque wrench is available the bearings should be adjusted so that the torque required to revolve the stud is as follows:

Lever Shaft Dia.	Torque, In. Lb.
1⅜″	3 to 4
1½″	3 to 4
1⅝″	4 to 8
1¾″	5 to 11

1. To adjust, remove lever shaft from housing, wash the bearings in solvent and blow dry with compressed air, using care not to spin the bearings. Lubricate the bearings with light oil.
2. Straighten out the prong of the locking washer to release the stud nut. Remove the nut and install a new locking washer.
3. While holding the stud nut from turning with a spanner wrench on the locking washer, tighten the nut as required to revolve the stud in accordance with the table above.
4. When proper adjustment has been secured, bend the prong of the washer against a side of the nut to keep it from turning.
5. Lubricate the bearings with gear oil and assemble the lever shaft in the steering gear housing.

INTERNATIONAL SCOUT

INDEX OF SERVICE OPERATIONS

PAGE NO.

AXLES, DRIVING

Eaton Axle Service 176
Front Driving Axle 811
International 809
Locking Differentials 169
Timken Axle Service 209

BRAKES

Adjustments 252
Air Brake System 259
Hydraulic Brake System 250
Vacuum Brake Boosters 268

CLUTCH 808

COOLING SYSTEM

Cooling System Capacity 766
Water Pump Repairs 807

ELECTRIC SYSTEM

Alternator & Regulators 37
Dash Gauge Service 93
Distributor Specifications 803
Distributor Service 7
Generator Specifications 804
Generator & Regulator Service 27
Ignition, Transistorized 22
Ignition Timing 807
Starting Motor Specifications 803
Starting Motor Service 65
Starter Switch Service 85

ENGINE

Camshaft & Bearings 806
Crankshaft Bearing Specifications 803
Crankshaft Oil Seal, Replace 807
Cylinder Head, Replace 804
Engine, Replace 804
Main Bearings, Replace 807
Piston Pins, Replace 806
Piston Rings, Replace 806
Piston & Ring Specifications 803
Pistons & Rods, Remove 806
Piston & Rod, Assemble 806
Pistons, Replace 806
Rocker Arm Service 804
Rod Bearings, Replace 806

PAGE NO.

Timing Gears 806
Valves, Grind 804
Valve Guides, Replace 805
Valve Lifters 805
Valves, Remove 804
Valve Rotators 805
Valve Seat Inserts 805
Valve Specifications 803
Valve Springs 805

ENGINE OILING

Crankcase Capacity 766
Crankcase Ventilation 6
Oil Pump Repairs 807

FUEL SYSTEM

Carburetor Adjustments 807
Crankcase Ventilation 6
Fuel Pump Service 104
L.P.G. Carburetion 109

SPECIFICATIONS

Carburetor Adjustment 807
Crankshaft & Bearing 803
Distributor 803
Engine Tightening Torque 803
Generator & Regulator 804
Piston, Pin & Ring 803
Starting Motor 803
Tune Up 803
Valve 803
Wheel Alignment 813

STEERING GEARS 812

TRANSFER CASES 242

TRANSMISSIONS

Clark 110
Fuller 122
International 808
New Process 135
Spicer 141
Warner 164
Powermatic 281

TUNE UP SERVICE 2

GENERAL ENGINE SPECIFICATIONS

Year	Engine Model	No. Cyls. & Valve Location	Bore & Stroke	Piston Displacement, Cu. In.	Compression Ratio ①	Maximum Brake H. P. @ R. P. M. ①	Maximum Torque, Lb. Ft. @ R.P.M. ①	Normal Oil Pressure, Lbs.
1961-63	4-152	4 In Head	3 7/8 x 3 7/32	152	8.19	90 @ 4400	135 @ 2400	50

TUNE UP & VALVE SPECIFICATIONS

Year	Engine Model	Firing Order	Spark Plug		Ignition Timing		Valve Seat Angle, Degrees	Valve Clearance H-Hot. C-Cold		Valve Spring Pressure, Lb. @ In. Length
			Type	Gap	Timing Mark	Location		Intake	Exhaust	
1961-63	4-152	1342	N5	.028	5°BTC	Damper	45	Zero	Zero	188 @ 1 27/64

ENGINE TIGHTENING SPECIFICATIONS★

★Torque specifications are for clean and lightly lubricated threads only. Dry or dirty threads produce increased friction which prevents accurate measurement of tightness.

Engine	Spark Plugs Ft. Lbs.	Cylinder Head Bolts Ft. Lbs.	Intake Manifold Ft. Lbs.	Exhaust Manifold Ft. Lbs.	Rocker Arm Shaft Bracket Ft. Lbs.	Rocker Arm Cover Ft. Lbs.	Connecting Rod Cap Bolts Ft. Lbs.	Main Bearing Cap Bolts Ft. Lbs.	Flywheel to Crankshaft Ft. Lbs.	Vibration Damper or Pulley Ft. Lbs.
4-152	28-30	75-80	40-45	40-45	75-80	....	40-45	75-80	45-55	100-110

PISTON, PIN, RING, CRANKSHAFT & BEARING SPECIFICATIONS

Year	Engine Model	Wristpin Diameter	Piston Clearance, Inch	Ring End Gap, In. (Minimum)		Crank Pin Diameter, Inch	Rod Bearing Clearance, In.	Main Bearing Journal Diameter, In.	Main Bearing Clearance, Inch	Thrust On Bearing No.	Shaft End Play
				Comp.	Oil						
1961-63	4-152	1.0624	②	.010	①	2.373-2.374	.0011-.0032	2.7484-2.7494	.001-.004	3	.001-.005

①—No gap at spring joint; steel rail gap .015″.
②—With .0035″ feeler 1″ wide, pull on spring scale should be 3 to 7 lbs.

STARTING MOTOR SPECIFICATIONS

Year	Model	Part No.	Brush Spring Tension, Ounces	No Load Test			Torque Test		
				Amperes	Volts	R.P.M.	Amperes	Volts	Torque Lbs. Ft.
1961-63	Scout	1107709	35	49-76	10.6	6200-9400	270-310	4.3	...

DISTRIBUTOR SPECIFICATIONS

Year	Model	Distributor Part No.	Rotation	Breaker Gap	Dwell Angle Deg.	Breaker Arm Spring Tension	Centrifugal Advance Degrees @ R P.M. of Distributor		Vacuum Advance	
							Advance Starts	Full Advance	Inches of Vacuum To Start Plunger	Max. Adv. Dist. Deg. @ Vacuum
1961-63	Scout	1110266		.016	75	19-23	1 @ 350	14 @ 2100	3-5	10 @ 7

GENERATOR AND REGULATOR SPECIFICATIONS

★ To polarize generator, reconnect the leads to the regulator; then momentarily connect a jumper wire from the "Gen" to the "Bat" terminals of the regulator.

Year	Generator						Regulator					
	Generator Number	Ground Polarity	Rated Cap. Amps.	Gen. Field Ground Location★	Brush Spring Tension, Ounces	Field Current Amperes	Regulator Number	Cutout Relay: Voltage to Close Points	Cutout Relay: Armature Air Gap, Inch	Voltage Regulator Setting Volts	Current Regulator Setting Amperes	Current and Voltage Armature Air Gap, Inch
1961–63	1100374	Neg.	25	External	28	1.50–1.62	1119000	12.6	.020	14.2	25	.075

Engine Section

ENGINE, REPLACE

1. Drain cooling system, crankcase and disconnect battery ground cable.
2. Remove fan blade, radiator, and other parts such as radiator cross braces, heater air ducts, etc., which may interfere with engine removal.
3. Remove carburetor and engine wiring.
4. Remove fuel line from pump.
5. Disconnect exhaust pipe from manifold.
6. Install lifting fixture on engine.
7. Hoist engine enough to support it while disconnecting engine front mountings.
8. Separate engine from transmission by separating transmission from flywheel housing or flywheel housing from rear of engine.
12. Remove engine from chassis.
13. Replace in reverse order of removal.

CYLINDER HEAD, REPLACE

Cylinder heads should be tightened down by starting from the center, working outward from side to side and to the ends in the sequence shown in Fig. 1.

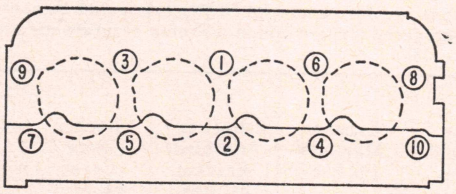

Fig. 1 Cylinder head tightening sequence

Draw the bolts down evenly, repeating the operation until all are normally tight. After running the engine to warm it up thoroughly, a final tightening should be made with a torque wrench to the torque load listed in the *Engine Tightening Specifications* table.

ROCKER ARM SERVICE

As shown in Fig. 2, the rocker arm assembly consists of the shaft, shaft supports, rocker arms and spacers. The rocker arms are lubricated by oil supplied to the hollow shaft through an oil passage in one of the supports.

Formation of sludge in the oil passages of the rocker arms and shaft will restrict flow of oil to the rocker arm bushings and valves. Therefore, each time the assembly is removed, it should be disassembled and cleaned thoroughly.

When disassembling, keep parts in order to assure reassembly in their original position if in satisfactory condition.

If necessary to remove plugs from each end of shaft, drill or pierce one plug, then knock out the opposite plug with a steel rod. Working from other end, knock out other plug.

When reassembling, lubricate rocker arm bushings with engine oil. Make sure the notches at ends of rocker arm shaft are up. Be sure to position the rocker arm support having the oil feed hole so that the oil hole will index with the oil feed hole in the cylinder head (third from rear, Fig. 3.

Service Note

Before installing push rods rotate the crankshaft to position the crankshaft pulley hub as shown in Fig. 3. This is to prevent possible damage to engine parts if the hydraulic lifters have not leaked down to operating position.

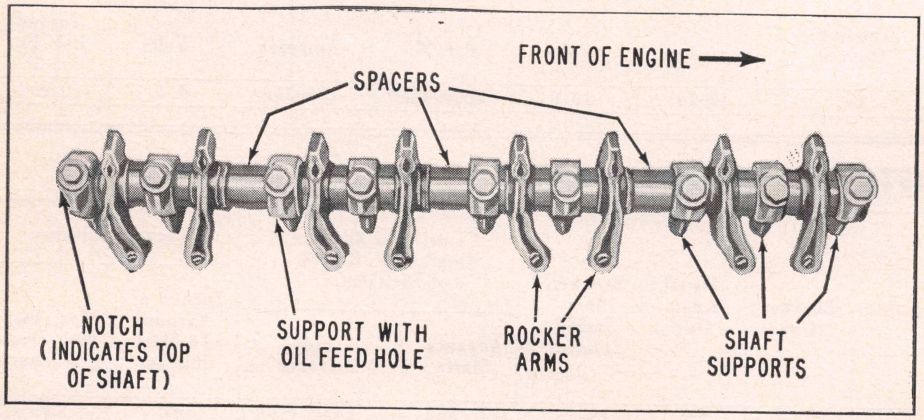

Fig. 2 Rocker arm assembly

VALVES, REMOVE

All Engines

After removing the cylinder head and rocker arm assembly, use a suitable spring compressor to compress the springs. Remove the valve locks and springs. Check the keeper grooves in the valve stems for burrs and remove any burrs with a file to prevent scoring of valve guides. Remove the valves and place them in a board with numbered holes so they can be replaced in the same valve port from which they were removed.

VALVES, GRIND

All Engines

Fig. 4 illustrates the recommended valve seats to be obtained. The intake seats may be narrower than the exhaust because they are usually larger in diameter, thus providing a total seat area ap-

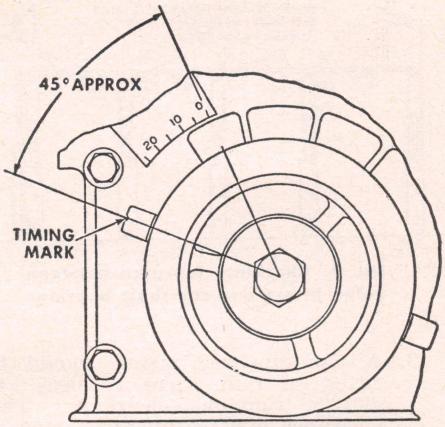

Fig. 3 Correct position of crankshaft pulley when installing push rod

proximately equal to smaller exhaust valve with the wider seat. Also the less severe heat conditions do not require as large a seat area for heat dissipation purposes.

There are also objections to an excessively wide seat. In city or light delivery service, a wide seat collects carbon and particles of dirt that will produce variations or loss of compression, resulting in poor idle and possibly a loss of general performance and economy.

A wide seat in severe service, operating in the presence of dirt or an excess of carbon, will produce a badly pitted seat which may be just as detrimental to valve life as a too narrow seat. Under these conditions, a seat width to the minimum limit would possibly be better. However, the source of trouble (dirt, carbon) should be eliminated, making it possible to retain the wider seat.

VALVE ROTATORS

Fig. 5 illustrates the valves and related parts. Note the "Roto Cap" used with the exhaust valve.

If the special gauge is not available, a check for clearance can be made by holding the assembled valve and rotating mechanism in the hands. With one hand press down on the valve cap and with the other hand turn the valve. If the valve turns readily at least it indicates that there is clearance present.

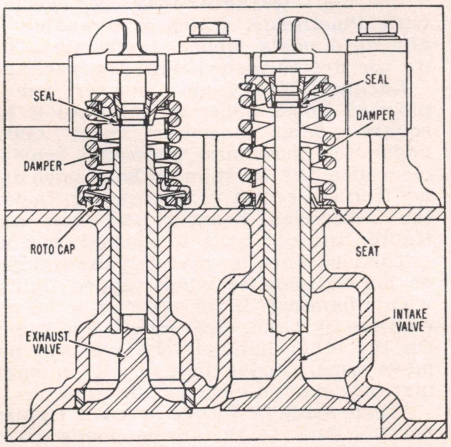

Fig. 5 Valves and related parts

VALVE SEAT INSERTS

If replacement of a valve seat insert becomes necessary, it is important that the new insert be securely peened in place, Fig. 6, using either an insert peening tool or a dull-pointed chisel, ¼" wide, to peen the cylinder head or block metal over the outer edge of the valve seat insert.

Valve seat inserts supplied for service are standard size and a .030" oversize which permits a tight fit.

VALVE SPRINGS

All Engines

Valve springs should be checked by measuring their free length, and the uniformity should not vary more than $\frac{1}{16}$".

Each spring should also be checked for squareness. This can be done with a steel square and surface plate. Stand each spring and the square on end on the surface plate and slide the spring up to the straight edge of the square. Then gradually revolve the spring, while at the same time noticing the space between the top coil of the spring and the square. This space should not exceed $\frac{1}{16}$"; if more, replace the spring.

Valve springs should be checked for tension with a spring tester. Any spring that does not conform to the specifications listed in the chart within 10% should be replaced.

VALVE GUIDES, REPLACE

Clean valve guides with a suitable cleaning tool. Then check each valve guide with a "GO and NO-GO" gauge, if available; otherwise, use a new valve to check the fit. If the "NO-GO" portion of the gauge enters, the guide must be replaced.

Clearance in excess of .006" for intake valves and .008" for exhaust valves, calls for replacement of valve guides.

New guides should be installed so that the distance from the cylinder head to the top of the guide is as follows:

4-152 intake ..... $\frac{31}{32}$"
4-152 exhaust ..... $1\frac{3}{32}$"

When guides are properly installed, they should be reamed to the following diameters:

4-152 ..... .376-.377

VALVE LIFTERS

Hydraulic valve lifters, Fig. 7, are removed from the engine as an assembly. The lifters are removed by removing the valve cover, rocker arm and shaft assembly, then lifting out the push rods. If a lifter cannot be removed due to carbon build-up, use a carburetor solvent in the lifter bore. However, if an excessive amount of solvent is used, it will be necessary to change the engine oil. The lifters are also accessible by removal of the lifter covers.

As shown in Fig. 7, different designs of hydraulic lifters are used. When disassembling, do not mix the components

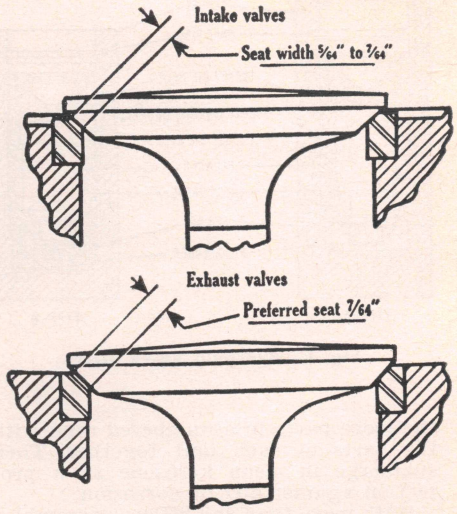

Fig. 4 Valve seat widths

of any lifter. Service kits of component parts are available for both types of lifters.

Servicing Hydraulic Lifters—Failure of a hydraulic lifter is generally caused by an inadequate oil supply, dirt or other foreign substance. An air leak at the intake side of the oil pump or too much oil in the engine will cause air bubbles in the oil supply to the lifters, causing them to collapse. This is a probable cause of trouble if several lifters fail to function, but air in the oil is an unlikely cause of failure of a single unit.

In servicing the lifters particular attention should be given the plunger and valve. The plunger should be checked for signs of scoring or wear, and the valve for pitting. Check the valve seat in the end of the plunger for any condition that would not allow the valve to seat perfectly. If any of the above conditions are apparent, install a new lifter assembly.

Do not disassemble a lifter in dirty surroundings or on a dirty work bench. Use clean paper on the bench and, after the lifter has been disassembled, place

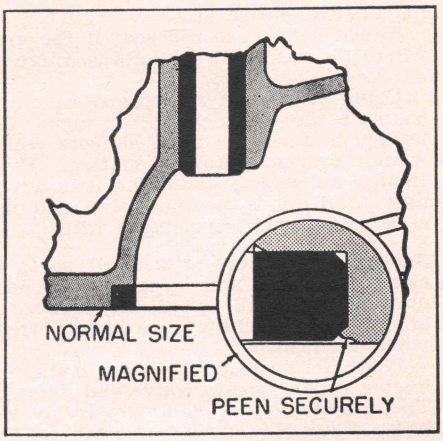

Fig. 6 Magnified view showing how cylinder head metal should be peened to secure valve seat insert in place

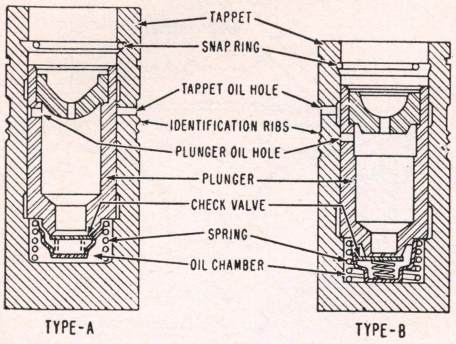

Fig. 7 Hydraulic valve lifters

the loose parts in a numbered rack with the parts of each unit together. Then submerge in clean kerosene as a protection against dirt or corrosion.

With more than one lifter disassembled it is imperative to keep the parts of each lifter separate. The plunger and valve must always be fitted in the same body.

Disassemble Lifter—With a suitable tool, pry out the plunger retainer ring. Clean varnish deposits from inside the lifter body above the push rod seat. Then invert the lifter body and drop out the parts.

Cleaning Lifters—Wash all lifters in a suitable solvent that will remove all trace of varnish and carbon (paint thinner will do). Then, working on one lifter at a time and using clean lint-free cloths, thoroughly wipe off all parts. Clean the plunger and the internal and external surfaces of the body with a hard wiping action to remove any varnish residue.

To insure absolute cleanliness of a reconditioned lifter assembly, it is advisable to service one at a time, assembling it before working on the next one.

Inspection—Inspect the lifter body for blow holes and scoring. Replace entire unit if body is roughly scored or grooved.

Using a magnifying glass, inspect the check valve seat for defects. Inspect the outer surface of the plunger for scratches or scores. Defects in the check valve seat or scores or scratches on the outer surface of the plunger which can be felt with the fingernail are causes for replacing the entire unit.

Replace the push rod seat if the area where the push rod contacts is rough or otherwise damaged.

Using a magnifying glass, carefully examine the check valve for nicks, imbedded material or other defects which would prevent proper seating. Even though no defects are found it is advisable to discard the old valve and use a new one when servicing a lifter.

Assembling Lifters—Rinse all parts in clean kerosene and assemble without drying. This will avoid the adherence of dust or lint if they are blown off or wiped with cloth.

Place the parts in the body in the following order: spring, valve and plunger. The plunger must slide freely in the body. Place the push rod seat on the plunger and depress these parts and install the plunger retainer in the groove in the body.

TIMING GEARS

When valves are correctly timed, the timing marks on the gears or sprockets should be adjacent to each other.

CAMSHAFT & BEARINGS

Camshaft bearings should be installed in sets and care must be exercised to see that the oil holes in the bearings and the oil feed holes in the block are aligned to assure adequate lubrication.

Camshaft bushings must be installed so as to provide running clearance between valve lifters and bushings as shown in Fig. 8.

PISTONS & RODS, REMOVE

After removing the cylinder head and oil pan, examine the cylinder bores above the ring travel area. If the bores are worn so that a shoulder or ridge exists at this point, remove the ridge with a ridge reamer to avoid damaging rings or cracking ring lands of pistons during removal.

Remove connecting rod caps and push the pistons and rods out of the cylinders, using care to prevent rod bolts from nicking crankshaft journals.

Make sure rods and pistons are properly numbered so they can be reinstalled in their proper cylinders. It is advisable to install the caps on the rods to avoid mixing parts.

PISTONS & RODS, ASSEMBLE

For correct assembly of the connecting rod to the piston, the rod bearing locators (bearing tangs) must be toward the dome side (marked "up") of the piston. And when installed in the cylinder, the word "up" on the piston goes toward the top (camshaft) side of the engine.

PISTONS, REPLACE

When fitting a piston, wipe the cylinder wall clean with a cloth and insert the piston upside down in the bore (rings and pin removed). Use a ½" wide feeler gauge which is long enough to extend the full length of the piston. The thickness of the feeler should be the same as the piston clearance given in the chart.

With the feeler hooked to a spring scale it should require the number of pounds given in the table to withdraw the feeler gauge from between the piston and cylinder.

NOTE—When steel-band-in-skirt pistons are used, the tolerances are held much closer than for other types. Furthermore, the feeler gauge method of checking this clearance is not practical. To attain proper fitting use micrometers for making piston selection and then check clearance as follows:

1. Wipe both piston and cylinder wall with clean, dry cloth.
2. Install piston top downward into cylinder.

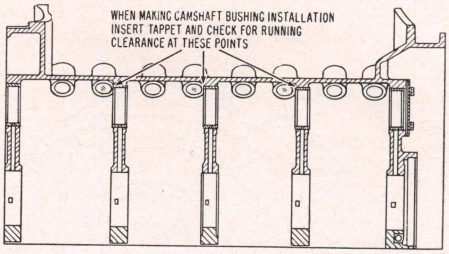

Fig. 8 Checking clearance between valve lifters and camshaft bearings

3. A non-knurlized piston should be fitted so that there is .0008" to .0013" running clearance. This clearance will permit the piston to fall slowly through the cylinder bore of its own weight.
4. Knurlized pistons should fit slightly closer. These pistons are fitted so there is a slight drag (1 to 2 lbs.) to a light push fit in the cylinder bore.

PISTON RINGS, REPLACE

Always use standard size rings in cylinder bores that are standard at the bottom, regardless of the amount of taper in the bore. Oversizes must be determined by the measurement of the narrowest portion of the bore.

New rings should be fitted according to the instructions furnished with the ring package. Ring grooves must be clean and free from carbon and must show no perceptible wear.

PISTON PINS, REPLACE

Piston pins are a press fit in the connecting rod. The fit should be .0006-.0012" in the rod and .0005-.0009" loose in the piston.

ROD BEARINGS, REPLACE

These bearings are of the precision insert type, requiring no scraping or reaming.

When installing bearings, be sure the back of the bearing shells as well as the bearing seats in the rods are smooth and clean.

Bearing clearance may be checked with Plastigage, which is available at any auto parts jobber. Instructions for its use are furnished with the package.

Lacking Plastigage, however, use a piece of tough paper or shim stock ¾" square which measures about .0005" under the maximum allowable bearing clearance. Oil the shim on both sides and lay it in the center of the bearing. Install the assembled bearing and cap and tighten the cap bolts to normal tension.

The clearance is correct if the rod can be moved endwise when tapped lightly with a hammer. If the rod can be moved endwise by hand, clearance is too great. On the other hand, if the rod will not move when tapped lightly with a hammer, not enough clearance is present.

When using a torque wrench tighten bearing caps to the torque loads given in the table.

MAIN BEARINGS, REPLACE

These bearings are of the insert type, requiring no reaming or scraping. They may be removed and replaced without removing the crankshaft.

Plastigage may be used to check bearing clearances, and instructions for its use are furnished with the package.

Lacking Plastigage, an alternate method is to use a piece of tough paper or shim stock 1" square which measures about .001" under the maximum allowable bearing clearance. Oil the shim on both sides and lay it in the center of the bearing. Install the assembled bearing and cap and tighten the cap bolts to normal tension.

Rotate the crankshaft through a two-inch arc (one each way) and if it is movable with a fairly heavy drag, the clearance is correct. If there is no perceptible drag, the clearance is too great. On the other hand, if the shaft cannot be moved, not enough clearance is present.

Be sure that the bearings are smooth and clean on both sides when installed. This applies to the bearing seats as well.

When using a torque wrench, tighten bearing caps to the torque loads given in the table.

CRANKSHAFT OIL SEAL, REPLACE

The rear main bearing oil seal can be replaced with the engine in the chassis by first removing the transmission, clutch and flywheel.

OIL PUMP REPAIRS

Conventional gear type oil pumps, located in the crankcase, are used on all engines. After removing the oil pan, the pump may be unfastened from its mounting and disassembled for repairs.

Inspect the pump gears for nicks or burrs. Inspect the bottom cover for wear and dress down on a surface plate with emery if necessary. Place the bottom cover on the pump and check the drive shaft end play. If end play is excessive (more than .006"), replace the drive and idler gears.

Service Note

Whenever the oil pump is removed, the distributor will have to be taken off as well in order to reinstall the pump without damage. The reason for this is that the slots in the end of the oil pump drive shafts must match the tangs on the end of the distributor drive shaft. If an attempt is made to install the pump while the distributor is in place, it will be difficult or impossible to align the slots and tangs with the result that the pump will be damaged when its mounting bolts are tightened. Be sure to retime the ignition when the oil pump and distributor are installed.

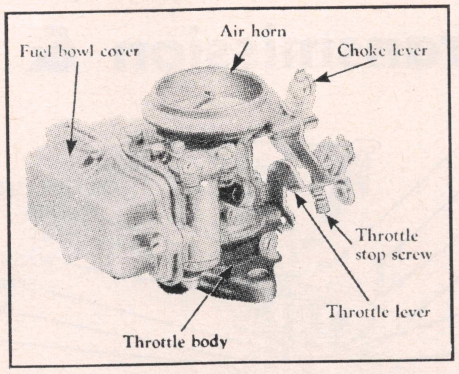

Fig. 9 Holley 1904 carburetor

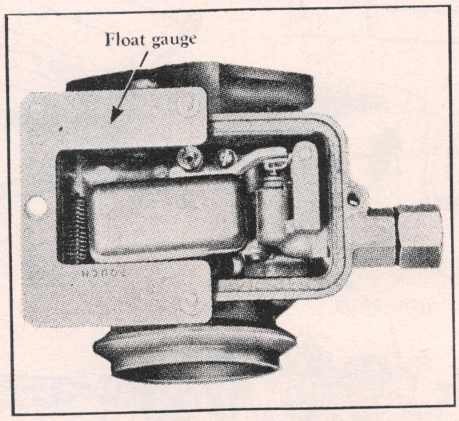

Fig. 10 Setting float level with gauge

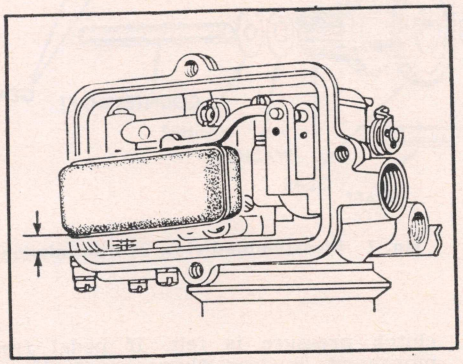

Fig. 11 Setting float level without gauge. Dimension indicated should be 13/64"

WATER PUMP REPAIRS

The pumps used on these engines are of the sealed ball bearing type packed with lubricant at the time of assembly and requiring no further lubrication. When disassembling, carefully note the arrangement of the seal parts so that correct assembly may be assured.

Never soak the shaft and bearing assembly in cleaning solvent because it will dissolve the lubricant. To clean the shaft and bearing, merely moisten a cloth with cleaning fluid and wipe away any surplus lubricant or other foreign matter.

Be sure the face of the housing against which the thrust washer turns is smooth and true. If not, smooth it up with a special water pump facing cutter.

IGNITION TIMING

If a timing light is to be used to set ignition timing, disconnect the vacuum advance pipe to the carburetor and place a piece of tape over open end of pipe. *This is important as carburetor trouble can affect timing adjustments.*

Lacking a power timing light, an accurate method of setting ignition timing with the engine stopped is with the aid of a jumper light. Be sure to use a light bulb that corresponds with the system voltage of the vehicle.

1. Remove distributor cap and rotor and see that the breaker gap is set according to specifications.
2. Rotate engine until No. 1 cylinder is at the ignition timing point as indicated by the timing pointer and timing mark being lined up with each other.
3. Connect the jumper light between distributor ignition terminal and ground.
4. Turn on ignition switch.
5. Loosen distributor and turn it in the direction of normal rotation until the points just close (light out). Then slowly turn distributor in the opposite direction just to the exact point that the light goes on. Tighten distributor in this position.

CARBURETOR

Holley 1904, Fig. 9

Float Level: Invert main body, allowing float to drop to the closed position. Using float gauge shown in Fig. 10, check the setting on both the "touch" and "no touch" legs of gauge. The level of the float may be adjusted by bending the small tab in the float lever which contacts the head of the fuel inlet needle pin. Use needle nose pliers for this adjustment and recheck the setting after adjustments have been made.

If the gauge is not available, measure from the roof of the float chamber to the lowest point of the float, Fig. 11, with carburetor inverted.

Idle Adjustment: When the engine has reached normal operating temperature, after first checking to be sure that the choke plate is wide open, adjust the throttle stop screw to idle the engine at 350 rpm.

Set the idle mixture adjusting needle to give the highest steady manifold vacuum. If a vacuum gauge is not available, adjust it to the smoothest maximum idle speed. Should the adjustment result in an excessive increase in the idle rpm, reset the throttle stop screw to obtain the specified rpm.

Clutch, Transmission & Rear Axle

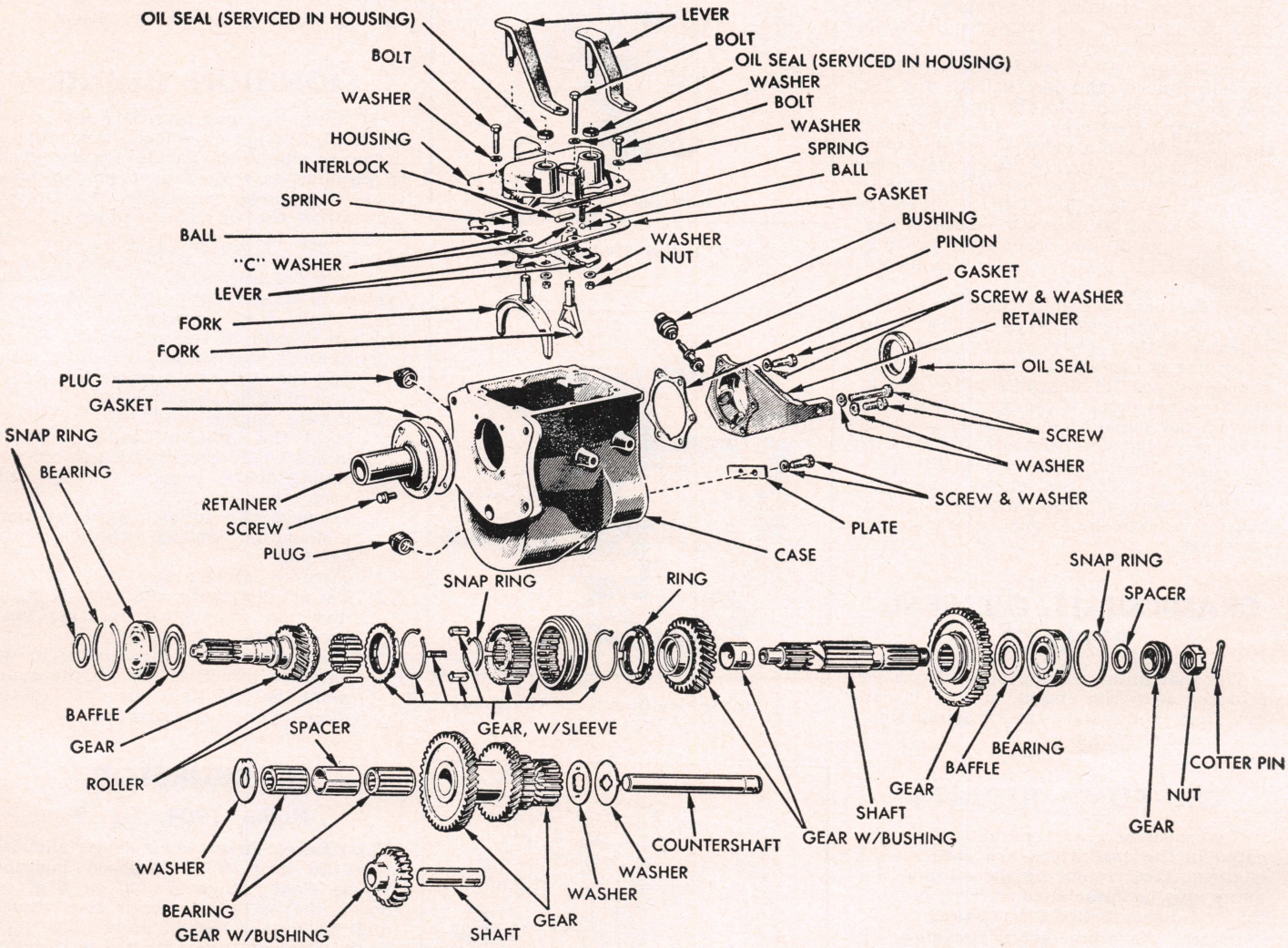

Fig. 1 Disassembled view of transmission

CLUTCH, REPLACE

When removing the transmission for the purpose of gaining access to the clutch or for any other reason, extreme care should be taken to support the weight of the transmission until it is completely removed so that the clutch shaft splines will clear the clutch disc hub. There is a possibility of distorting the clutch disc which will then not permit a free release of the clutch.

When installing the clutch, position the disc and clutch assembly on the flywheel, using a stub shaft (or a spare clutch shaft) to align the clutch disc. Then tighten the cover-to-flywheel capscrews gradually and evenly.

Free Pedal Travel, Adjust

The clutch pedal should have a minimum of 1½" free movement before clutch pressure is felt. If pedal free movement is less than specified, an adjustment is necessary to provide adequate bearing-to-lever clearance.

On models with turnbuckle release rod, adjustment is made by loosening release rod lock nuts on each side of turnbuckle. Looking down on turnbuckle, turn it counter-clockwise to increase or clockwise to decrease free travel.

On models with adjustable end yokes, remove yoke pins and turn yokes up or down on release rod as required.

TRANSMISSION

Disassemble, Figs. 1 & 2

1. Remove gearshift housing.
2. Remove parking brake.
3. Remove mainshaft bearing retainer.
4. Drive countershaft out through rear of case.
5. Use puller to remove mainshaft bearing.
6. Remove input shaft retainer and tap shaft and bearing as far forward as possible.
7. Remove mainshaft assembly.
8. Remove input shaft. If bearing is to be replaced, assemble with thickest snap ring that will fit.
9. Use puller to remove reverse idler shaft.
10. Remove reverse idler gear and countershaft gear cluster.

Assemble Transmission

1. Install reverse idler gear and shaft.
2. Install cluster gear assembly with front thrust washer tip hooked into groove on inside of case. Check end play (.006-.020"). Change thrust washers as required.

3. Install assembled mainshaft. Place a short 2 x 4 block between input shaft and mainshaft. Slide mainshaft bearing baffle and bearing onto shaft. Baffle must be installed so it does not rub bearing outer race. Drive bearing onto shaft.
4. Install mainshaft pilot rollers in input shaft, holding them with grease.
5. Place front blocking ring on synchronizer and start input shaft bearing in case.
6. Drive mainshaft bearing into case.
7. Tap input shaft and bearing into place. Install retainer without gasket and tighten bolts to bottom retainer on snap ring. With feeler gauge, check clearance between gasket surface and case. Select a gasket or gaskets that will seal oil and eliminate all clearance.
8. Raise cluster gear and insert countershaft. Then install retainer in notches in countershaft and reverse idler shaft. Drive both shafts toward front so that retainer is tight against gasket and torque bolts to 25-37 ft. lbs.
9. Install speedometer gear and spacer, mainshaft bearing retainer and gasket, and parking brake. Tighten output shaft nut to 90-125 ft. lbs.
10. Install gearshift housing.

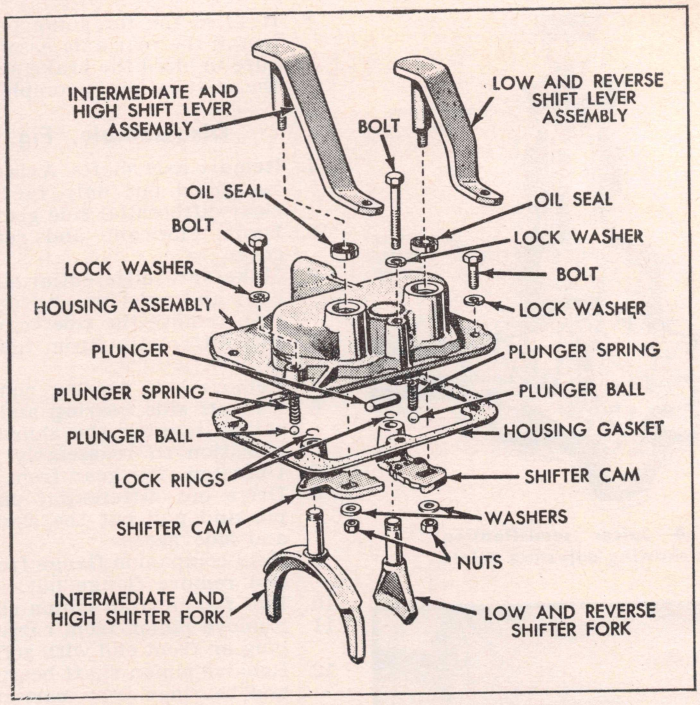

Fig. 2 Disassembled view of gearshift housing

SPICER REAR AXLE

Integral Housing Type

Inasmuch as the axle tubes are pressed into the differential carrier to form a one-piece housing, the rear axle assembly must be removed from the chassis when it becomes necessary to overhaul the unit.

Axle Shaft, Remove

1. Raise vehicle and place stand jacks under rear axle housing.
2. Remove wheel and brake drum.
3. Remove four nuts from bearing retainer bolts on inside of axle flange.
4. Attach axle shaft puller and remove axle shaft and bearing assembly.
5. Install bolt and nut to hold brake backing plate on axle housing.

Bearing or Oil Seal, Replace

1. With a chisel, nick soft ring next to bearing and remove ring. The ring need not be split, only nicked deep enough to allow removal.
2. Install a suitable press plate between axle flange and bearing and press bearing from shaft.
3. To replace oil seal, pry it out of housing with screwdriver.
4. Install new seal.
5. Install new bearing, pressing it on so it seats on the shaft against shoulder. Bearing retainer must be on axle shaft before bearing is installed.
6. Install new bearing retainer ring, being sure ring seats against bearing.

Axle Shaft, Install

1. Insert five new bolts and force heads down to flange on new axle.
2. Peen end of shoulder on bolts into countersink around bolt holes in flange.
3. Install new bearing as outlined above.
4. Remove temporary nut and bolt holding brake backing plate in place.
5. Install new retainer gasket.
6. Install axle shaft in housing. Outer race of bearing must seat against shoulder in axle housing.
7. Install nuts and washers on bearing retainer bolts and tighten securely.
8. Install brake drum and wheel.

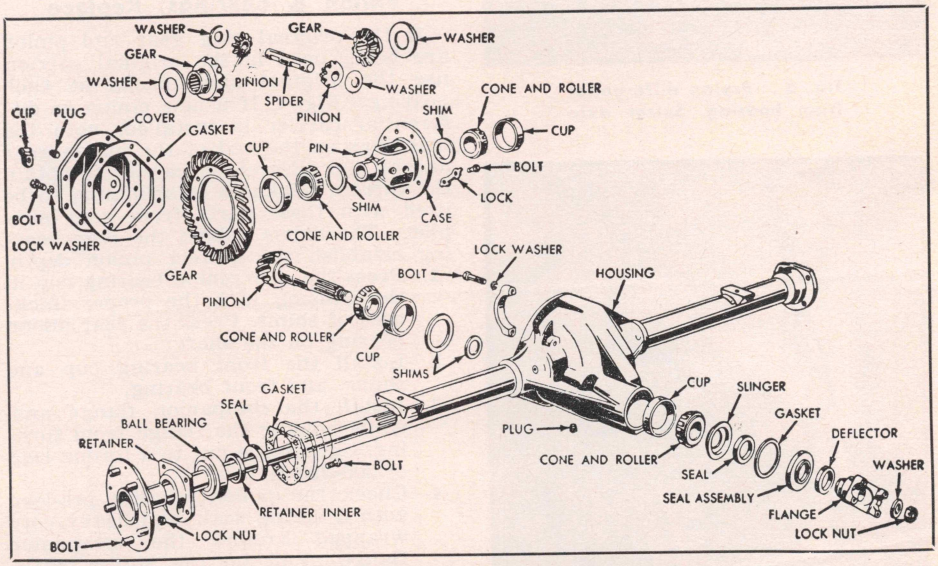

Fig. 3 Disassembled view of rear axle. Front driving axle is similar

Rear Axle Assembly, Replace

Inasmuch as the axle tubes are pressed into the differential carrier to form a one-piece housing, the rear axle assembly must be removed from the chassis when it becomes necessary to overhaul the unit.

1. Raise vehicle from floor and support with stand jacks under frame side rails.
2. Remove rear wheels.
3. Split rear universal joint.
4. Disconnect parking brake cable from equalizer rod and unfasten brake cable brackets from frame cross member.

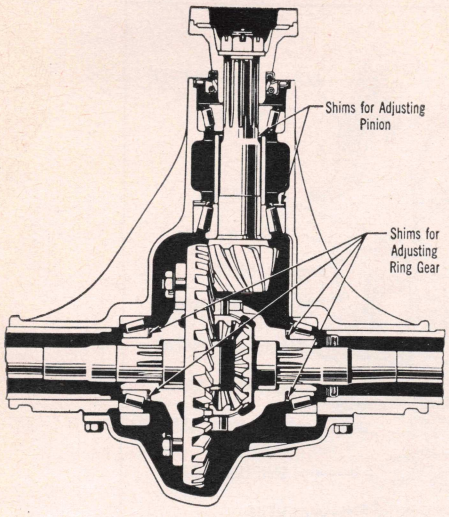

Fig. 4 Spicer semi-floating axle showing adjusting points

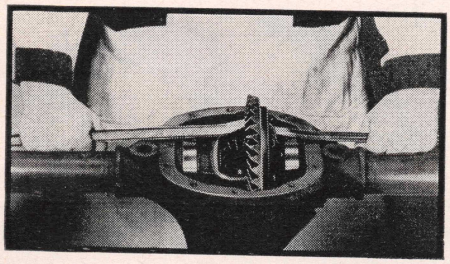

Fig. 5 Prying differential from housing. Spicer axle

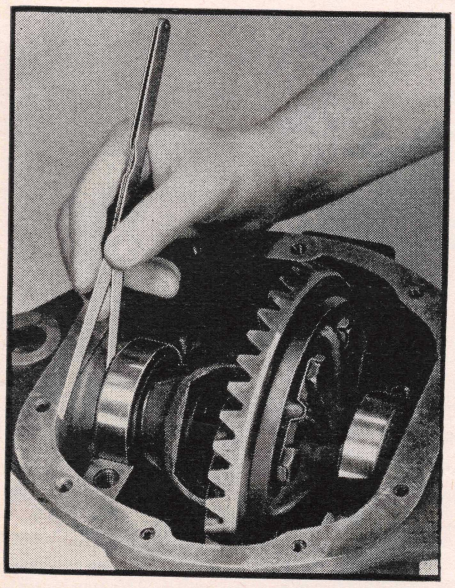

Fig. 6 Checking clearance between bearing cup and differential case. Spicer axle

5. Disconnect hydraulic brake line connection at rear axle housing.
6. Loosen and move shock absorbers out of the way.
7. While supporting axle housing with hydraulic jack, remove spring clips and lower axle assembly to the floor.
8. Reverse the foregoing procedure to install the rear axle assembly, being sure to bleed the brake system when the installation is completed.

Disassemble, Fig. 3

1. Remove axle shafts. Axle shafts may be pulled out only far enough to clear differential side gears.
2. Drain lubricant and remove rear cover.
3. Make sure differential side bearing caps and axle housing are marked, then remove the side bearing caps.
4. Pry differential from housing, Fig. 5.
5. Remove side bearing cups.
6. Pull off side bearing and adjusting shims, tagging the shims for identification on reassembly.
7. Unfasten ring gear from case.
8. Drive out differential pinion shaft pin and pull out the shaft, pinions and side gears.
9. Hold companion flange from turning and remove flange nut.
10. Pull flange from pinion shaft.
11. Remove pinion from carrier by tapping on front end with soft hammer.
12. Remove pinion shaft bearing oil seal and bearings from carrier, keeping separate the shim pack at each bearing.

Pinion & Bearings, Replace

If the original ring gear and pinion are being used in the original carrier, use the original shim packs at each bearings, Fig. 4. If a new pinion or differential carrier is installed, note the markings on the end of the pinion gear and on the differential carrier to obtain the correct thickness of shimming to be used with these parts from your supplier. The shims behind the rear bearing establish the correct pinion depth.

1. Press the rear pinion bearing cup in the housing with the proper thickness of shims. Press the rear pinion bearing on the shaft.
2. Install the front bearing cup and shims, and front bearing.
3. Install the companion flange and, while holding the flange from turning, tighten the nut to a torque load of 200-220 lb. ft.
4. Check the pinion bearing pre-load with a spring scale and heavy cord wrapped around the companion flange. Pull on the spring scale. The torque required to rotate the pinion is 10-30 inch lbs. If not within these limits, add or remove shims from behind the front bearing to obtain the proper pre-load.
5. Remove the companion flange and install a new oil seal (well soaked). Reinstall the companion flange and tighten the nut to a torque load of 200-220 lb. ft.

Ring Gear, Replace

1. Install guide pins in every other hole in the ring gear. These pins can be made from 1½" long capscrews with heads cut off and ends slotted.
2. Make sure back face of ring gear and face of case are free of dirt and burrs and slip gear over pilot diameter of case.

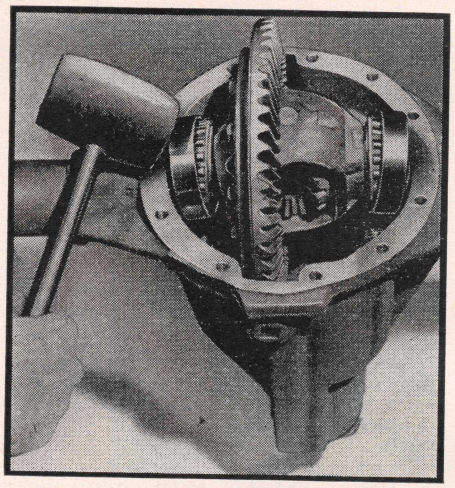

Fig. 7 Installing differential and bearing cups. Spicer axle

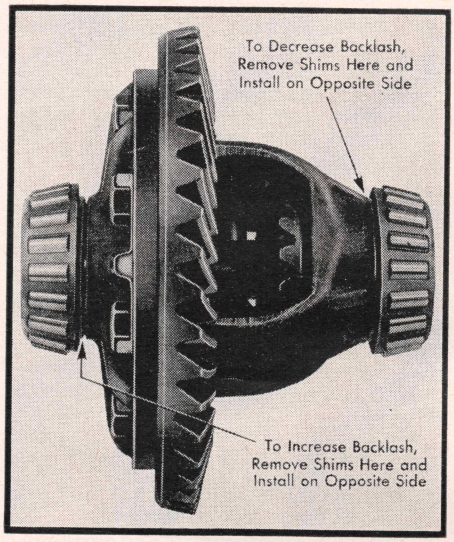

Fig. 8 Method of correcting backlash between ring gear and pinion. Spicer axle

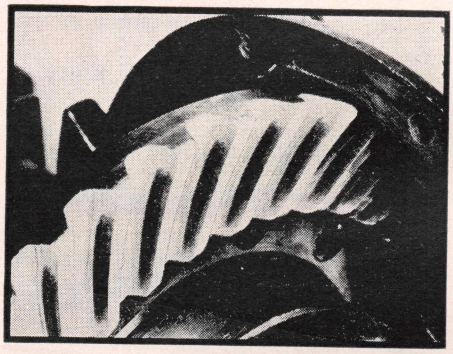

Fig. 9 Proper tooth contact. The tooth bearing both lengthwise and profile should appear as shown

3. Install every other ring gear bolt. Draw them up evenly and snugly so ring gear face is flush with face of case.
4. Remove guide pins and install remaining bolts.

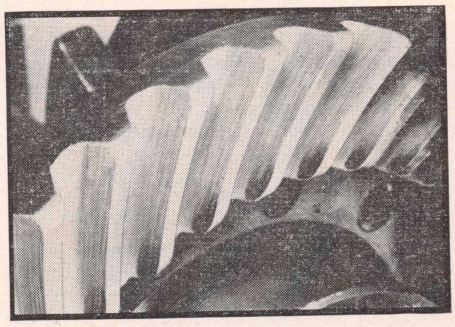

Fig. 10 Not enough backlash. Move ring gear away from pinion

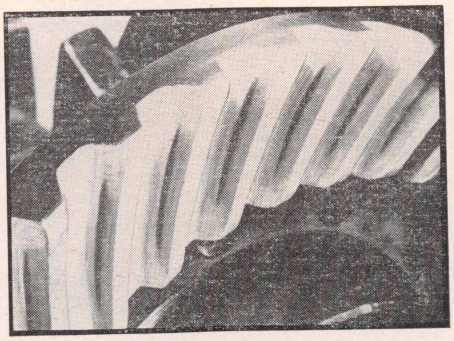

Fig. 11 Too much backlash. Move ring gear toward pinion

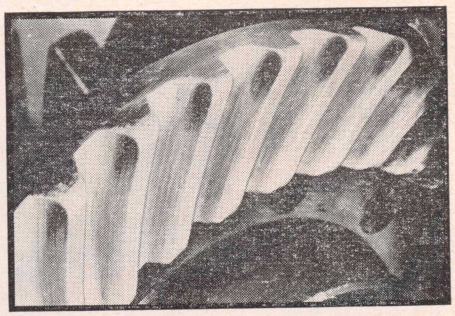

Fig. 12 Pinion in too far. Move pinion away from ring gear

Differential Carrier, Assemble

The differential bearings are adjusted by shims, Fig. 4. These shims also establish the ring gear position with the pinion. Therefore, backlash must be checked whenever a bearing adjustment is made.

The correct bearing adjustment is one which will provide a .015-.020″ pinch fit when the differential unit is assembled into the carrier. To make the adjustment, install the bearing cones without shims and place the assembly in the housing with the bearing cups. Force the unit to one side and check the clearance between the bearing cup and differential case with a feeler gauge, Fig. 6. When the clearance is determined, select shims of this amount plus .015-.020″ extra to establish the proper pre-load.

Remove the differential bearings again and divide the shims into two packs of equal thickness and install on each side and replace the bearings. Reinstall the unit in the carrier. This operation is made easier by cocking the bearing cups slightly when the differential is placed in the housing and then tapping them lightly with a mallet, Fig. 7.

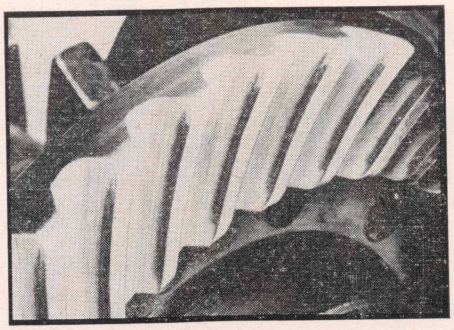

Fig. 13 Pinion out too far. Move pinion toward ring gear

However, when installing the differential in the housing, be sure the ring gear teeth mesh with the pinion teeth before tapping the bearings in place.

After the bearing cups are firmly in place, install the bearing caps. The bearing caps and gasket surface of the housing are marked with a horizontal numeral and on the other side by a vertical numeral. The position of the numerals should correspond when reinstalling the bearing caps.

Ring Gear & Pinion Backlash, Adjust

Mount a backlash gauge indicator on the carrier and start checking for the correct backlash between the ring gear and pinion. If the backlash is not within the limits of .004″ to .009″, it will be necessary to change the arrangement of the shims back of the bearings. Make corrections in backlash according to Fig. 8, bearing in mind that shims removed from one side must be installed on the opposite side so that the total shim thickness of the right and left side will remain unchanged, and the bearing adjustment undisturbed.

Gear Tooth Contact Pattern

Allowable variations in the carrier or drive pinion may cause the pinion to be too far in or out even when shimmed properly. Thus, the tooth contact must be tested and corrected as necessary or the gears may be noisy.

Paint the ring gear teeth with a light coating of red lead, white lead or prussian blue. Revolve the gears and observe the contact, referring to Figs. 9 to 12.

Front Driving Axle & Steering Gear

FRONT DRIVING AXLE

The differential carrier assembly is the same as the rear driving axle except that the front unit is full floating. The axle shafts can be removed without dismantling the steering knuckles.

Axle Shaft & Universal Joint

Removal

1. Referring to Figs. 1 and 2, remove hub cap and wheel.
2. Remove grease cap and snap ring.
3. Remove drive flange and gasket.
4. Remove brake drum.
5. Remove wheel bearing adjusting nut and washer.
6. Remove wheel hub with wheel bearing, taking care not to damage oil seal.
7. Disconnect brake hose at backing plate.
8. Remove six backing plate and wheel spindle bolts and washers.
9. Remove wheel bearing spindle with bushing.
10. Pull axle shaft and universal joint from axle housing.

Installation

1. Clean dirt from all parts.
2. Enter shaft and joint assembly into housing. Enter spline end of axle shaft into differential and push into place.
3. Install wheel bearing spindle with bushing.
4. Install backing plate and brake hose.
5. Pack wheel bearings with lubricant and install.
6. Assemble driving flange, wheel hub and drum.
7. Install wheel bearing lockwasher and adjusting nut. Tighten adjusting nut until there is a slight drag on bearings when hub is turned, then back off 1/6th of a turn.
8. Install lockwasher and lock nut; tighten nut and bend lip of lockwasher over lock nut.
9. Install snap ring, grease cap, wheel and hub cap.

Steering Knuckle Bearings

Replacement of steering knuckle bearings or bearing cups on the kingpin requires removal of the tie rod, brake drum, hub, wheel bearing, axle shaft, spindle and steering knuckle. The following procedure should be followed when removing the steering knuckle:

1. Referring to Figs. 1 and 2, remove studs and tapered capscrews holding kingpin bearing lower cap.
2. Remove studs and tapered capscrews holding kingpin bearing upper cap and shims.
3. Remove eight oil seal retaining capscrews.
4. Remove upper and lower steering

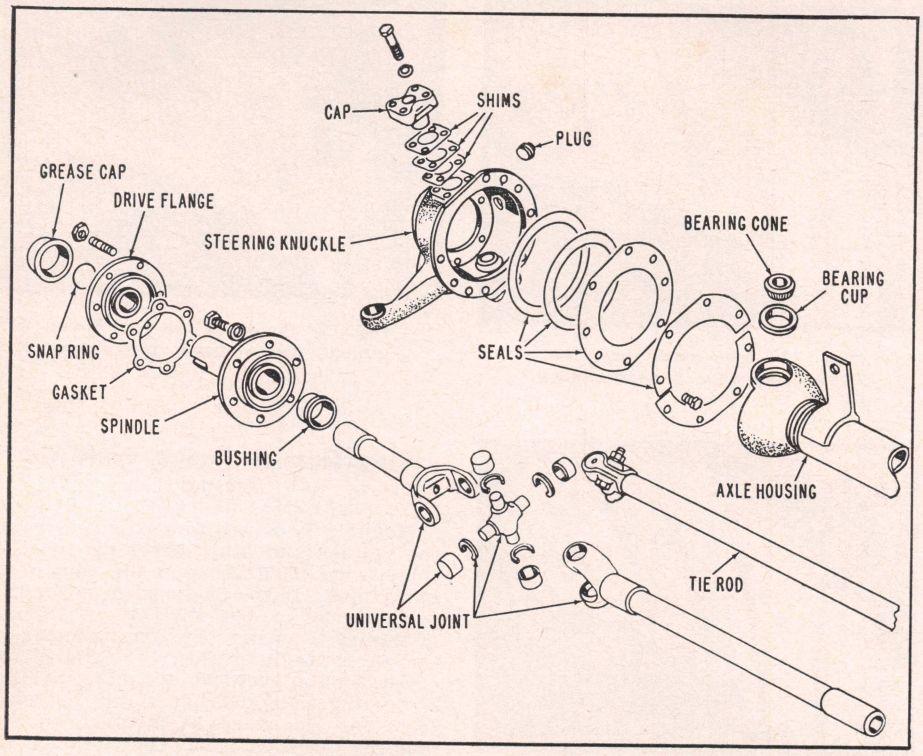

Fig. 1 Disassembled view of axle shaft and universal joint

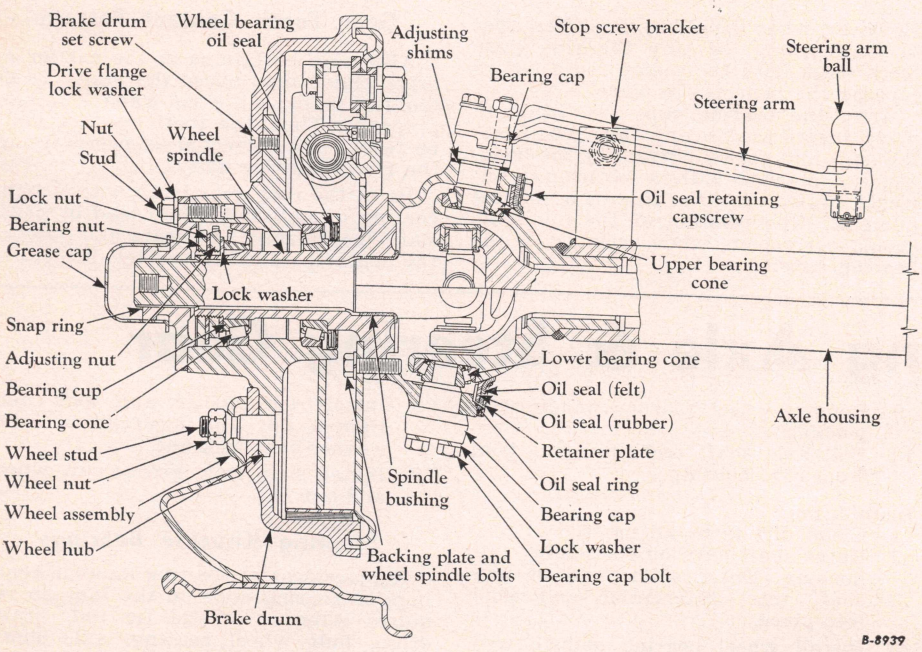

Fig. 2 Sectional view of front wheel, steering knuckle, axle shaft and universal joint

knuckle bearing cone and cup.

5. Remove steering knuckle and seals.

Installation: When reinstalling the steering knuckle, sufficient shims must be installed under the upper bearing cap so the proper tension may be maintained on the knuckle bearing. No shims are used on the lower bearing cap.

Shims are available in thicknesses of .005", .010", and .030". Install one each of the three thicknesses over the studs on top of the knuckle. Then proceed as follows:

1. Install wheel bearing cups and cones, steering arm, bearing cap, bolts, lockwashers and nuts.
2. Check tension of bearings by hooking a spring scale around the steering arm ball.
3. Pull the scale at right angle to the steering arm. Take the reading when the arm is moving.
4. Remove or add shims until the load is approximately 25-35 pounds without the oil seal assembly in position.

Steering Knuckle Oil Seal

To remove the seal, remove the eight capscrews holding the steering knuckle oil seal in place and remove the seal.

Before installing the new seal, examine the spherical surface of the axle for scores or scratches that might damage the new seal. Roughness of any kind should be smoothed with fine emery cloth.

Lubrication

The front axle universal joints are lubricated by a constant supply of lubricant in the steering knuckle housings. A level plug for checking the lubricant level is located at the rear of each housing. Every 1,000 miles the level should be checked. The recommended capacity for each steering knuckle housing is 38 oz. Use viscous chassis lubricant. *If necessary to overhaul the universal joints, see the Universals chapter.*

STEERING GEAR

When making adjustments on the steering gear, Fig. 3, free the gear of all load, preferably by disconnecting the drag link from the steering arm, and loosen the instrument panel bracket clamp on the steering gear jacket tube. If the ball thrust bearings on the cam must be adjusted, make this adjustment first before making the side adjustment to the lever shaft stud in the cam groove.

Ball Thrust Bearing On Cam, Adjust

1. Referring to Fig. 4, loosen the housing side cover adjusting screw to free the studs in the cam groove.
2. Adjustment should be made so there is a very slight drag but not so much that the steering wheel cannot be turned from one extreme to the other by lightly gripping the wheel rim with thumb and forefinger.
3. Unscrew the four screws and raise the housing upper cover to permit removal of shims.
4. Clip and remove a thin shim or more as required and draw cover down tight against shims.
5. Test as outlined in Step 2 and if necessary, remove or replace shims until adjustment is correct.

Lever Shaft Stud, Adjust

1. Backlash at this point shows up as end play of lever shaft, also as backlash at steering wheel and at ball on steering arm.
2. The groove is purposely cut deeper in ends of cam than at mid-position. This produces a high range through mid-position and makes grooves narrower through this range. This permits take-up of backlash in mid-position, after normal wear of

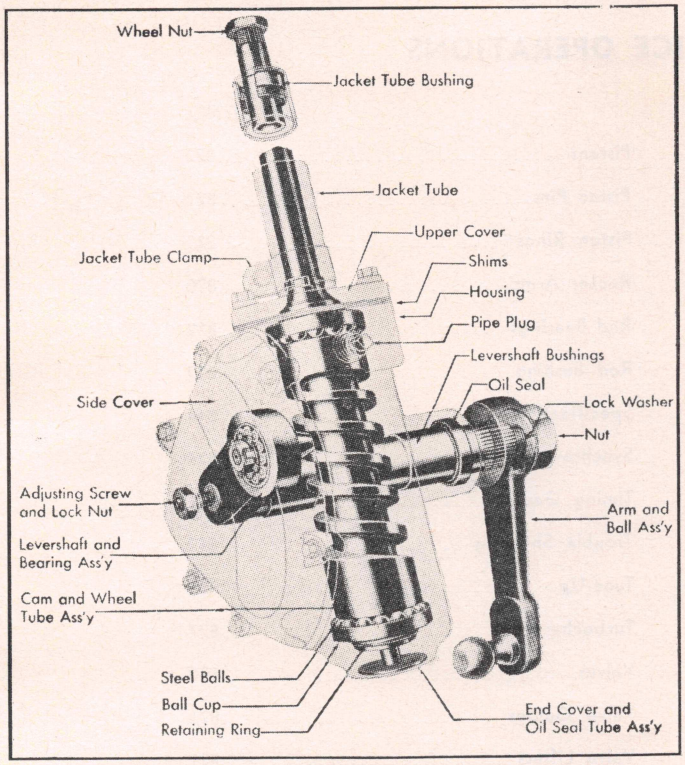

Fig. 3 Steering gear assembly

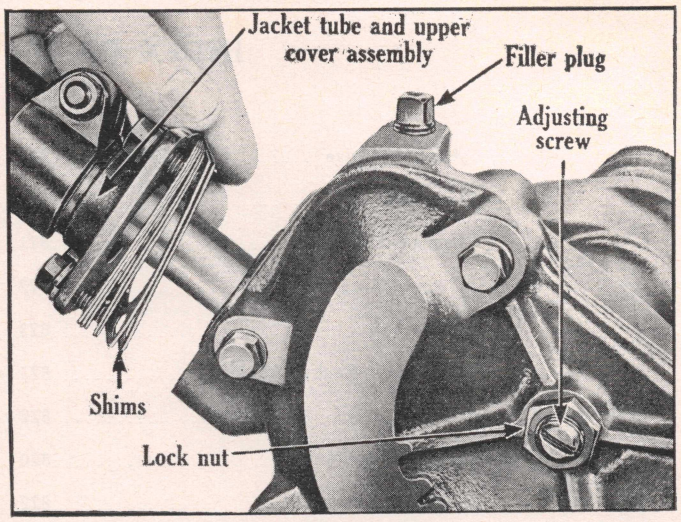

Fig. 4 Steering gear adjustments

groove, without causing a bind in the ends.

3. Adjust to this mid-position high range only. Play in end position is not objectionable.
4. Tighten side cover adjusting screw until a very slight drag is felt through the mid-position when turning steering wheel slowly from one extreme position to the other. *Steering gear must not bind in any position. Only a very slight drag should be felt. A closer adjustment will not correct steering looseness caused by wear in other steering gear units, but will damage parts and impair operation.*
5. When proper adjustment has been made, tighten locknut and check adjustment.
6. Make sure steering gear arm is tight on splined lever shaft and that lockwasher and nut are tight also.

WHEEL ALIGNMENT SPECS.

Two-Wheel Drive

Caster, degrees	2 to 3
Camber, degrees	1
Toe-in, inch	0 to $\frac{3}{16}$
Kinpin angle	7

MACK DIESEL ENGINES

INDEX OF SERVICE OPERATIONS

	PAGE NO.
Auxiliary Drive	821
Camshaft	821
Camshaft Bearings	821
Connecting Rods	822
Crankshaft	823
Crankshaft Rear Oil Seal	823
Cylinder Block	822
Cylinder Head	820
Cylinder Sleeves	822
Fuel Injection Pump	825
Fuel Supply Pump	826
Fuel System	823
Governor, Hydraulic	824
Governor, Mechanical	825
Lube Oil Pump	823
Main Bearings	823
Nozzle and Holder	827
Nozzle Sleeve	820
Pistons	822
Piston Pins	822
Piston Rings	822
Rocker Arms	820
Rod Bearings	822
Rod Bushing	822
Specifications	814
Synchrovance	824
Timing Gears	821
Trouble Shooting	817
Tune-Up	815
Turbocharger	827
Valves	820
Valve Guides	821
Valve Lifters	821
Valve Seat Inserts	820
Valve Springs	821
Water Pump	823

GENERAL SPECIFICATIONS

ENGINE IDENTIFICATION—Engine model and serial number located on top of right front motor leg.

Engine Model	Engine Breathing	Firing Order	No. Cyls. Bore & Stroke	Cu. In. Displ.	Comp. Ratio	Max. H. P. @ R.P.M. Governed	Max. Torque @ R.P.M. Lbs. Ft.	Normal Lube Oil Pressure	Lube Oil Capacity, Qts.	
									Less Filter	With Filter
END-673	Natural	153624	6–4⅞ x 6	672	16.59	170 @ 2100	480 @ 1200	45–60	15	29
ENDL-673	Natural	153624	6–4⅞ x 6	672	16.59	170 @ 2100	480 @ 1200	45–60	15	29
ENDT-673	Turbocharged	153624	6–4⅞ x 6	672	16.59	205 @ 2100	560 @ 1400	45–60	15	31
ENDLT-673	Turbocharged	153624	6–4⅞ x 6	672	16.59	205 @ 2100	560 @ 1400	45–60	15	31

CYLINDER HEAD & VALVE SPECIFICATIONS

Engine Model	Cylinder Head Torque Lbs. Ft.	Valve Lash (Cold)		Valve Seat Angle		Valve Stem Dia.		Valve Lilt		Valve Spring Load (Min.) Lbs. @ Inch Length	
		Intake	Exhaust	Intake	Exhaust	Intake	Exhaust	Intake	Exhaust	Inner	Outer
END-673	150	.016	.024	30	30	.4975	.4975	9/16	9/16	82 @ 2 1/32	105 @ 2 5/32
ENDL-673	150	.016	.024	30	30	.4975	.4975	9/16	9/16	82 @ 2 1/32	105 @ 2 5/32
ENDT-673	150	.016	.024	30	30	.4975	.4975	9/16	9/16	82 @ 2 1/32	105 @ 2 5/32
ENDLT-673	150	.016	.024	30	30	.4975	.4975	9/16	9/16	82 @ 2 1/32	105 @ 2 5/32

CYL. BLOCK, SLEEVE, PISTON, PIN & RING SPECIFICATIONS

Engine Model	Cyl. Block Bore, In.	Sleeve Fit In Block	Std. Sleeve Inside Dia.	Piston Clearance Std. Sleeve	Ring End Gaps, Minimum					Wrist Pin Diameter
					No. 1	No. 2	No. 3	No. 4	No. 5	
END-673	5.0935–5.0945	①	4.875–4.877	.006–.008	.030	.013	.013	.012	.012	1.6244–1.6247
ENDL-673	5.0935–5.0945	①	4.875–4.877	.006–.008	.030	.013	.013	.012	.012	1.6244–1.6247
ENDT-673	5.0935–5.0945	①	4.8745–4.8755	.006–.0065	.030	.013	.013	.012	.012	1.6244–1.6247
ENDLT-673	5.0935–5.0945	①	4.8745–4.8755	.006–.0065	.030	.013	.013	.012	.012	1.6244–1.6247

①—.000″ to .002″ tight.

CRANKSHAFT & BEARING SPECIFICATIONS

Engine Model	Con. Rod Journal Diameter	Con. Rod Bearing Clearance	Con. Rod Side Play	Rod Bolt Torque Lbs. Ft.	Main Bearing Journal Diameter	Main Bearing Clearance	Which Bearing Takes Thrust	Crankshaft End Play	Main Bearing Bolt Torque Lbs. Ft.
END-673	2.9975–2.9980	.0011–.0031	.006–.012	150	3.9985–3.9990	.002–.0045	No. 4	.004–.011	150①
ENDL-673	2.9975–2.9980	.0011–.0031	.006–.012	150	3.9985–3.9990	.002–.0045	No. 4	.004–.011	150①
ENDT-673	2.9975–2.9980	.0011–.0031	.006–.012	150	3.9985–3.9990	.002–.0045	No. 4	.004–.011	150
ENDLT-673	2.9975–2.9980	.0011–.0031	.006–.012	150	3.9985–3.9990	.002–.0045	No. 4	.004–.011	150

①—120 lbs. ft. on older blocks not identified by 150 mark adjacent to casting number.

ENGINE TUNE-UP

Caution—Some of the adjustments given below require breaking one or more of the tamper-proof seals protecting the injection pump and governor and should be performed only by a Mack Branch or Bosch Service Station. Breaking any of these seals voids all warranty.

Fuel System

The following procedure is a guide for restoring engine and accessory equipment to original specifications. Before proceeding, loosen fuel tank sump plug to drain sediment and water, clean sump of primary filter and change element of secondary filter. Operate hand priming pump to bleed air from lines.

Air Cleaner

Remove oil reservoir and element. Remove sludge from reservoir, clean element in suitable cleaning solvent and allow to dry. Dip element in engine oil, allow to drain and reinstall in housing. Fill reservoir to level mark with engine oil and reinstall baffle and reservoir. Check all connections from air cleaner to inlet manifold for tightness and possible air leaks.

Cylinder Head Stud Nuts

Check tightness of cylinder head stud nuts after engine has cooled. *Do not check with engine hot.* Tighten nuts in

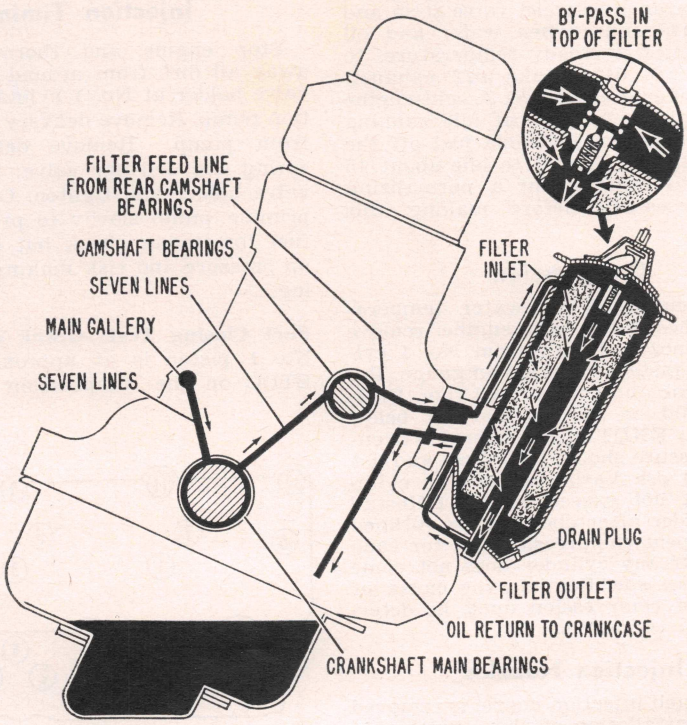

ENGINE SECTIONED FROM THE REAR

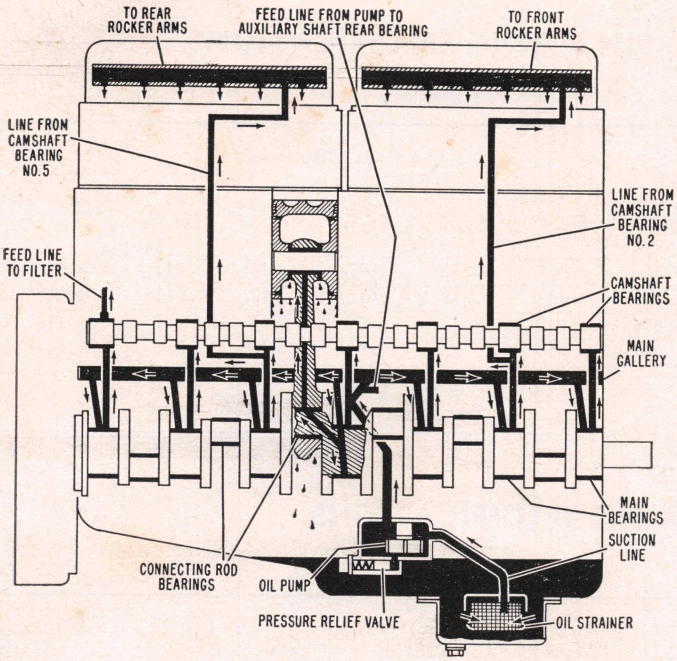

ENGINE SECTIONED FROM RIGHT SIDE

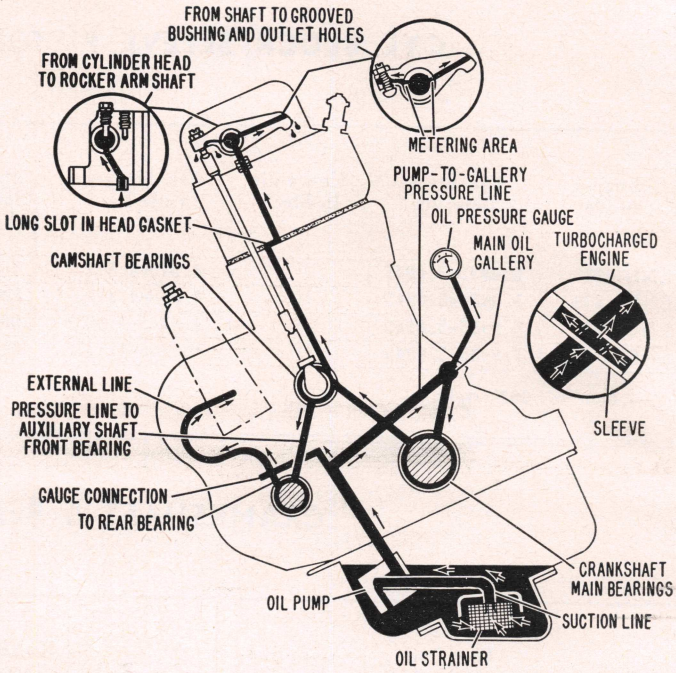

ENGINE SECTIONED FROM THE FRONT

the sequence shown in Fig. 1 to 150 ft. lbs.

A special offset wrench is available through Mack (17-T-169A) for tightening nuts close to the rocker arm brackets. Lacking this tool, it is recommended that the rocker arm assemblies be removed to permit proper tightening.

Valve Clearance

With engine running at idling speed, check clearance between valve stem and rocker arm ends, when water and oil have reached a steady temperature, to a clearance of .014″ intake, .022″ exhaust. This is hot idle clearance. A cold engine requires about ½ hour of idle running and the engine of a vehicle just off the road should be allowed to idle about 15 minutes to bring about a normalizing action necessary before making this check.

Compression

Start engine. When water temperature reaches 160°F. stop engine, remove injection nozzle holder from No. 1 cylinder and install compression gauge. Restart engine and run at 1000 rpm. Pressure should be 595 psi and not below 525 psi on ENDT engines; on END engines, pressure should be 550 psi and not below 500 psi. Variation between cylinders must not exceed 50 psi. Reinstall nozzle holder after checking as outlined below. Repeat compression test for each cylinder. If any cylinder does not come up to above specification, the cause of the loss of compression must be determined and corrected.

Injection Nozzles

When each injection nozzle is removed to allow installation of the compression gauge, the nozzle should be cleaned with a bronze wire brush (Mack Tool No. 17-T-112) without disassembly from the holder. Test nozzle for leaks and for 2300 to 2350 psi opening pressure. Install a reconditioned nozzle if not satisfactory. Remove carbon from engine nozzle port using a suitable reamer (Mack Tool No. 17-T-11103). Blow out loose carbon and install nozzle, using new gasket. Tighten stud nuts to a torque of 168 to 204 *inch lbs.*

Injection Timing

Stop engine and thoroughly clean away all dirt from around the delivery valve holder at No. 1 cylinder of injection pump. Remove delivery valve holder from pump. Remove delivery valve spring and delivery valve; then replace valve holder and tighten. Operate hand priming pump slowly to provide ample fuel for timing check but do not build up pressure and risk making false reading.

Port Closing Test—Crank engine until No. 1 piston is at approximately 35° BTDC on the compression stroke. Set and hold throttle in full open position. Start to stroke the transfer pump slowly. When fuel flows from delivery valve holder, have helper crank engine very slowly until flow from delivery valve holder just ceases. Note timing at flywheel.

Perform test twice to insure accuracy. Unless flow ceases exactly at 29° BTDC on ENDT engine or 27° BTDC on END, proceed to retime injection pump as follows:

Adjustment—Remove cover held onto engine timing gear cover by eight capscrews, exposing the driven gear and hub. Loosen four capscrews in the hub and turn hub in the direction indicated by flywheel reading (index mark toward "R" on gear to retard or toward "A" to advance). One division on hub equals 4 degrees on the flywheel. For example, if fuel flow ceased at 31° BTDC, rotate hub so index mark is one division closer to "R" on gear. Tighten capscrews and repeat port closing test.

An alternate procedure if necessary to adjust is as follows: Set flywheel to exactly 29° BTDC on ENDT engine or 27° BTDC on END engine. Loosen four capscrews in the gear hub and turn counter-clockwise as far as it will go. Then turn hub slowly clockwise until fuel flow just ceases. Tighten capscrews and repeat port closing test.

When adjustment is obtained so fuel flow ceases at the correct time, replace pump drive cover, reinstall delivery valve and spring and reconnect fuel line.

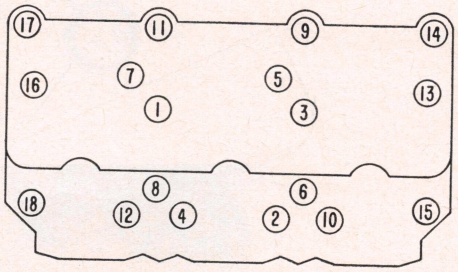

Fig. 1 Tighten cylinder heads in sequence shown to a torque of 150 lbs. ft.

Injection Pump Rack Setting

With engine stopped, remove dust cover covering rack on front end of injection pump. Work throttle from idle to full on position several times and hold manually at the full on position. Use universal rack extension gauge (17-T-11245) and check measurement

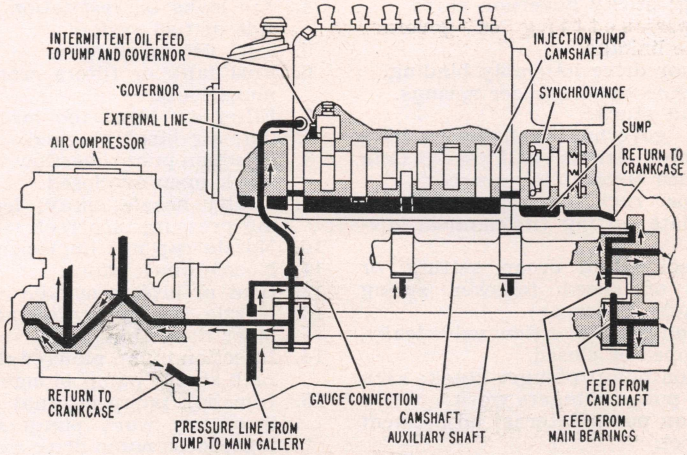

AUXILIARIES SECTIONED FROM RIGHT SIDE

in accordance with "P" number of injection pump. When using gauge, make certain that gauge legs are flat against face of pump. If necessary to adjust the rack to obtain this setting, first remove the inspection cover from the top of the governor housing.

On END engines, note that with full open throttle the nose of the cam will bear against the stop plate, Fig. 2. First check the cam angle and adjust cam if necessary. Make certain lock nut is tight. Then adjust the stop plate by means of the two adjusting nuts to obtain correct rack extension (1.484″), Fig. 2, as cam nose bears against the plate. Tighten the adjusting nuts and replace inspection cover with gasket on top of governor housing. Remove gauge and replace cap before starting engine.

On ENDT engines, check the cam angle and cam plate clearance, Fig. 2. If not correct, adjust by means of the cam angle adjusting screw. Recheck cam angle. Now adjust the rack by means of the two nuts shown in Fig. 3 to obtain the correct extension dimension. Recheck cam-to-cam plate clearance (.087″) to make sure it has not changed by setting the rack. Tighten rack adjusting nuts and replace inspection cover with gasket on top of governor housing.

Mechanical Governor Adjustment

Check idling (550 rpm) and no-load governed speed (2250 rpm) with engine at operating temperature and using a precision tachometer. Adjustments may be made at the box behind the operating lever on the side of the governor, Figs. 4 and 5.

For idle speed adjustment, Fig. 4, loosen the lock nut and turn the screw IN to increase and OUT to decrease idle speed. When checking idle speed on bus with torque converter, the shift lever should be in the forward position and the idle speed is 550-575 rpm.

To adjust governed no-load speed, it is necessary to remove the stop flange covers. Loosen the lock nut and turn the screw, Fig. 5, OUT to increase and IN to decrease governed speed. At the correct setting of 2250 rpm the full-load speed will automatically be correct. Tighten lock nuts and replace covers.

TROUBLE SHOOTING GUIDE

Before consulting the guide make sure the following items have been checked and found satisfactory:

1. Batteries fully charged and all electrical connections tight.
2. Starter switch and starter in good condition.
3. Fuel in tank and system primed.
4. Lubricating oil at proper level and clean.
5. No restriction in air intake system.
6. Engine cooling system in good condition.
7. Fuel lines, suction and pressure connections tight.
8. All gauges and meters read properly.

Engine Cranks, Will Not Start

Fuel Pressure Normal:

1. Emergency shut-off cock closed or partly closed.
2. Air intake manifold valve closed or partly closed.
3. Low ambient air temperature; use starting aid.
4. Governor throttle shaft linkage binding, or sticky governor parts.
5. Injection pump rack stuck.
6. Hydraulic Governor Installation:
   a. Pressure relief valve spring broken.
   b. Pressure relief valve stuck open.
   c. Shut-down valve stuck or open.
   d. Air in governor oil feed, insufficient oil pressure.
   e. Loose governor ball-head drive assembly; excess ball-head tang clearance.
   f. Incorrect speed droop setting or length of speed follower spring.
7. Injection pump internal adjustment incorrect.
8. Worn injection pump shaft bearings.
9. Loose injection pump drive assembly; timing incorrect.

Fuel Pressure Low:

1. Air intake manifold closed or partly closed.
2. Fuel tank vent restricted.
3. Fuel supply pump inoperative or leaking.
4. Air leaks or restriction on suction

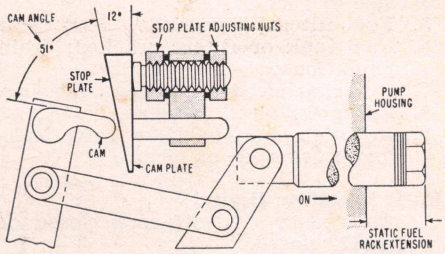

Fig. 2 Injection pump rack setting, END engine. Static fuel rack dimension is 1.484″

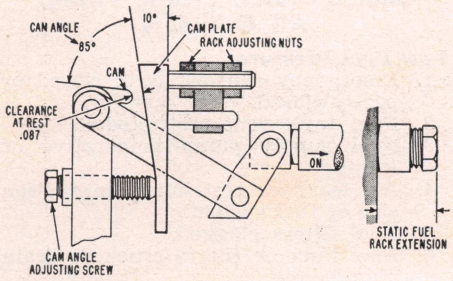

Fig. 3 Injection pump rack setting, ENDT engine. Static fuel rack dimension is 1.446″ with P4 pump and 1.428″ on P7 pump

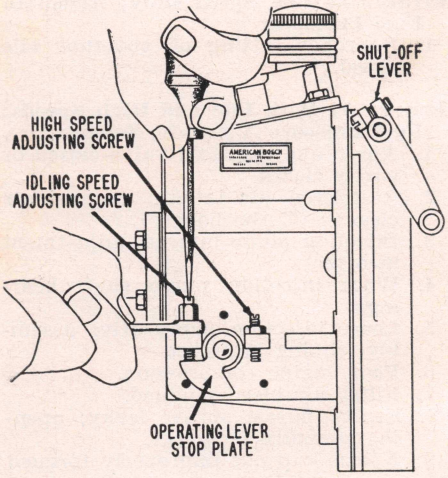

Fig. 4 Idle speed adjustment on mechanical governor

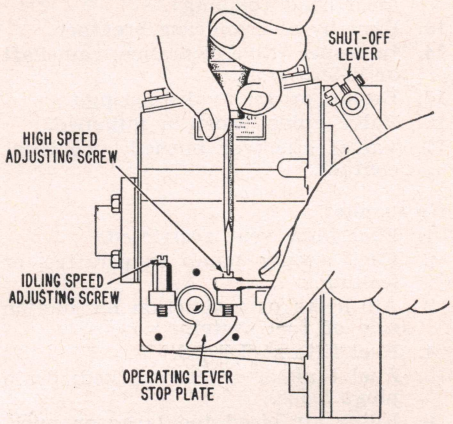

Fig. 5 Governed no-load speed adjustment on mechanical governor

side of fuel system.
5. Fuel filters clogged.
6. Fuel tank or filters cracked; drain plugs loose.
7. Filter air bleed too large or missing.
8. Filter air bleed plugged.
9. Injection pump overflow valve leaking, stuck open or closed.

Fuel Pressure High:
1. Emergency shut-off cock closed or partly closed.
2. Injection pump rack stuck.
3. Broken governor throttle spring or linkage disengagement.

Engine Starts, Erratic Firing, All Cylinders

Low Fuel Pressure:
1. Emergency shut-off cock closed or partly closed.
2. Fuel tank vent restricted.
3. Fuel supply pump inoperative or leaking.
4. Air leaks or restriction on suction side of fuel system.
5. Fuel filters clogged.
6. Fuel tank or filters cracked; drain plugs loose.
7. Filter air bleed too large or missing; air-bleed plugged.
8. Injection pump overflow valve leaking, stuck open or closed.

Erratic At Idle Speed Only; Adequate Fuel Pressure:
1. Improper setting of governor idle speed.

Erratic At Both Idle and High Speeds; Fuel Pressure Adequate, Smoke:
1. Air intake manifold valve closed or partly closed.
2. Restricted air intake; clogged air cleaner (Turbocharger).
3. Injection pump internal adjustment incorrect.
4. Worn injection pump shaft bearings.
5. Loose injection pump drive assembly; timing incorrect.
6. Poor engine compression.
7. Filter air bleed plugged.
8. Faulty nozzle spray; leaky; opening pressure incorrect.
9. Nozzle cap nut improperly torqued.
10. Nozzle pintle stuck.
11. Bent or broken spindle or spring.
12. Nozzle improperly installed in cylinder head (binding).
13. Blow-by at crankcase breather.
14. Improper valve clearance; camshaft or lifters worn.
15. Broken or weak valve springs.
16. Valve guides worn or gummed.
17. Valves stuck or burned; poor seat contact.

No Smoke:
1. Fuel tank vent restricted.
2. Fuel supply pump inoperative or leaking.
3. Air leaks or restriction on suction side of fuel system.
4. Fuel filters clogged.
5. Fuel tank or filters cracked; drain plugs loose.
6. Filter air bleed too large or missing; air bleed plugged.
7. Governor throttle shaft linkage binding; sticky governor parts.
8. Improper setting of governor throttle linkage.
9. Governor drive assembly binding.
10. Broken or weak speeder springs.
11. Solenoid stuck.
12. Loose governor ball-head drive assembly; excess ball head tang clearance (hydraulic governor).
13. Improper rack, gap, cam angle or cam plate setting (mechanical governor).
14. Incorrect speed droop setting, or length of speed follower spring (hydraulic governor).
15. Injection pump overflow valve leaky, stuck open or closed.
16. Injection pump plunger stuck; rack stuck; pump plungers worn.
17. Injection pump internal adjustment incorrect.
18. Worn injection pump shaft bearings.
19. Loose injection pump drive assembly; timing incorrect.
20. Leaky cylinder head gasket; leaky gaskets or seals.

Engine Missing On One or More Cylinders

At Idle Speed Only:
1. Improper setting of governor idle speed.
2. Poor compression.
3. Delivery valve stuck or leaking.
4. Faulty nozzle spray, leaky, opening pressure incorrect.
5. Nozzle cap nut improper torqued.
6. Nozzle pintle stuck.
7. Bent or broken spindle or spring.
8. Nozzle improper installed in cylinder head (binding).
9. Injection pump plunger stuck; pump rack stuck; pump plungers worn.
10. Injection pump internal adjustment incorrect.
11. Worn injection pump shaft bearings.
12. Loose injection pump drive assembly; timing incorrect.

Missing At High and Idle Speeds, Smoke:
1. Injection pump internal adjustment incorrect.
2. Worn injection pump shaft bearings.
3. Loose injection pump drive assembly; timing incorrect.
4. Faulty nozzle spray, leaky, opening pressure incorrect.
5. Nozzle cap nut improperly torqued.
6. Nozzle pintle stuck.
7. Bent or broken spindle or spring.
8. Nozzle improperly installed in cylinder head (binding).
9. Poor Compression.
10. Blow-by at crankcase breather.
11. Leaky cylinder head gasket; leaky gaskets or seals.
12. Improper valve clearance; camshaft or lifters worn.
13. Broken or weak valve springs.
14. Valve guides worn or gummed.
15. Valves stuck or burned; poor seat contact.
16. Stuck pistons or cylinder sleeves.

No Smoke:
1. Emergency shut-off cock closed or partly closed.
2. Fuel tank vent restricted.
3. Fuel supply pump inoperative or leaking.
4. Air leaks or restriction on suction side of fuel system.
5. Fuel filters clogged.
6. Fuel tank or filters cracked; drain plugs loose.
7. Filter air bleed too large or missing; air bleed plugged.
8. Injection pump overflow valve leaky, stuck open or closed.
9. Faulty nozzle spray; leaky; opening pressure incorrect.
10. Nozzle cap nut improperly torqued.
11. Nozzle pintle stuck.
12. Bent or broken spindle or spring.
13. Nozzle improperly installed in cylinder head (binding).
14. Injection pump plunger stuck; pump rack stuck; pump plungers worn.
15. Injection pump internal adjustment incorrect; worn pump shaft bearings; loose pump drive assembly; incorrect timing.
16. Improper valve clearance; camshaft or lifters worn.
17. Broken or weak valve springs.
18. Valve guides worn or gummed.
19. Valves stuck or burned; poor seat contact.
20. Leaky cylinder head gasket; leaky gaskets or seals.

Blow-By At Crankcase Breather:
1. Piston rings stuck or worn, broken or improperly fitted.
2. Scuffed pistons or cylinder sleeves.

Engine Stalls Frequently

Low or No Fuel Pressure:
1. Fuel tank vent restricted.
2. Fuel supply pump inoperative or leaking.
3. Air leaks or restriction on suction side of fuel system.
4. Fuel filters clogged.
5. Fuel tank or filters cracked; drain plugs loose.
6. Filter air bleed too large or missing; air bleed plugged.
7. Injection pump overflow valve leaky, stuck open or closed.
8. Air in governor oil feed; insufficient oil pressure (hydraulic governor).

Fuel Pressure Adequate, No Smoke:
1. Improper setting of governor idle speed.
2. Governor throttle shaft linkage binding, or sticky governor parts.
3. Improper setting of governor throttle linkage.
4. Governor drive assembly binding.
5. Broken or weak speeder springs.
6. Solenoid stuck.
7. Improper rack, gap, cam angle or cam plate setting (mechanical governor).
8. Air in governor oil feed; insufficient oil pressure (hydraulic governor).
9. Restriction in lubricating oil system; faulty gauge.
10. Injection pump internal adjustment incorrect; worn injection pump shaft bearings; loose pump drive assembly; incorrect timing.
11. Injection pump plunger stuck; pump rack stuck; pump plungers worn.

Black Smoke:
1. Governor throttle shaft linkage binding or sticky governor parts.

2. Turbocharger passing oil; restricted air intake or clogged air cleaner; nozzle ring restricted, slow charger rpm; binding impeller.
3. Injection pump internal adjustment incorrect; worn pump shaft bearings; loose pump drive incorrect timing.
4. Improper valve clearance; worn camshaft or lifters; broken or weak valve springs; valve guides worn or gummed; valves stuck or burned.
5. Faulty nozzle spray, leaky, opening pressure incorrect; nozzle cap nut improperly torqued; nozzle pintle stuck; bent or broken spindle or spring; nozzle improperly installed in cylinder head.

Engine Surges

1. Improper setting of governor idle speed.
2. Air leaks or restriction on suction side of fuel system; fuel filter air bleed too large or missing; air bleed plugged.
3. Air in governor oil feed; insufficient oil pressure (hydraulic governor).
4. Governor throttle shaft linkage binding or sticking governor parts; governor drive binding; broken or weak speeder springs.
5. Loose governor ball-head drive; excess ball-head tang clearance (hydraulic governor).
6. Worn sliding sleeve, flyweight fingers, linkage or excessive end play (mechanical governor).
7. Incorrect speed droop setting, or length of speed follower spring (hydraulic governor).
8. Displaced mechanical governor throttle shaft bushings; yoke binding.
9. Injection pump internal adjustment incorrect; worn pump shaft bearings; loose pump drive; incorrect timing.
10. Injection pump plunger stuck; pump rack stuck; pump plungers worn.
11. Restriction in lube oiling system; faulty gauge.

Engine Will Not Attain No-Load Governed RPM

1. Emergency shut-off cock closed or partly closed.
2. Air intake manifold valve closed or partly closed.
3. Fuel tank vent restricted.
4. Low ambient air temperature; use starting aid.
5. Improper setting of governor or high speed stop.
6. Governor throttle shaft linkage binding, or sticky governor parts; improper setting of governor throttle linkage; governor drive binding; broken or weak speeder springs; solenoid stuck.
7. Improper rack, gap, cam angle or cam plate setting (mechanical governor).
8. Worn mechanical governor sliding sleeve, flyweight fingers, worn linkage, excessive end play.
9. Pressure relief valve spring broken or relief valve stuck open (hydraulic governor).
10. Air leaks or restrictions on suction side of fuel system.
11. Fuel filters clogged; fuel tank or filters cracked or drain plugs loose; filter air bleed too large, missing or plugged.
12. Fuel supply pump inoperative or leaking.
13. Injection pump internal adjustment incorrect; worn pump shaft bearings; loose pump drive; timing incorrect.
14. Injection pump plunger stuck; pump rack stuck; pump plungers worn.
15. Blow-by at crankcase breather.

Engine Overspeeds

1. Improper setting of governor or high speed stop.
2. Broken mechanical governor throttle spring or linkage disengagement.
3. Governor throttle shaft linkage binding or sticky governor parts; improper setting of governor throttle linkage; governor drive binding; broken or weak speeder springs; solenoid stuck.
4. Injection pump rack stuck.
5. Displaced governor throttle shaft bushings, yoke binding (mechanical governor).
6. Worn mechanical governor sliding sleeve, flyweight fingers, governor linkage, excessive end play.
7. Turbocharger passing oil.

Engine Lacks Power

No Smoke:

1. Emergency shut-off cock closed or partly closed.
2. Air intake manifold valve closed or partly closed.
3. Fuel tank vent restricted.
4. Low ambient air temperature; use starting aid.
5. Air leaks or restriction on suction side of fuel system.
6. Fuel filters clogged; fuel tank or filters cracked, drain plugs loose; filter air bleed too large, missing or plugged.
7. Leaky cylinder head gaskets or seals.
8. Injection pump plunger stuck, pump rack stuck, pump plungers worn.
9. Injection pump internal adjustment incorrect; worn pump shaft bearings; loose pump drive; timing incorrect.
10. Improper setting of governor or high speed stop.
11. Governor throttle shaft linkage binding or sticky governor parts; improper setting of governor throttle linkage; governor drive binding; broken or weak speeder springs; solenoid stuck.
12. Incorrect speed droop setting or length of speed follower spring (hydraulic governor).
13. Improper rack, gap, cam angle or cam plate setting (mechanical governor).
14. Air in hydraulic governor oil feed, insufficient oil pressure.
15. Restricted turbocharger air intake, clogged air cleaner; nozzle ring restricted, slow charger rpm; binding turbocharger impeller.

Black or Brown Smoke:

1. Emergency shut-off cock closed or partly closed.
2. Air intake manifold valve closed or partly closed.
3. Fuel tank vent restricted.
4. Low ambient air temperature; use starting aid.
5. Faulty nozzle spray, leaky, opening pressure incorrect; nozzle cap nut improperly torqued; nozzle pintle stuck; bent or broken spindle or spring; nozzle improperly installed in cylinder head (binding).
6. Injection pump internal adjustment incorrect; worn pump shaft bearings; loose pump drive; timing incorrect.
7. Improper rack, gap, cam angle or cam plate setting (mechanical governor).
8. Poor engine compression.
9. Improper valve clearance; camshaft or lifters worn; broken or weak valve springs; valve guides worn or gummed; valve stuck or burned; poor valve seat contact.
10. Leaky cylinder head gasket; leaky gaskets or seals.
11. Piston rings stuck or worn, broken or improperly fitted.
12. Scuffed pistons or cylinder sleeves.
13. Restriction in lube oil system or faulty gauge.
14. Turbocharger passing oil; restricted charger air intake or clogged air cleaner; nozzle ring restricted, slow charger rpm; binding charger impeller.

Blue or White Smoke:

1. Leaky cylinder head gasket; leaky gaskets or seals.
2. Piston rings stuck, worn, broken or improperly fitted.
3. Scuffed pistons or cylinder sleeves.
4. Turbocharger passing oil; restricted charger air intake, clogged air cleaner; nozzle ring restricted, slow charger rpm; binding charger impeller.
5. Water leak in combustion chamber, cracked cylinder head.

Engine Won't Shut Down

1. Governor throttle shaft linkage binding or sticky governor parts; solenoid stuck.
2. Incorrect speed droop setting or length of speed follower spring (hydraulic governor).
3. Displaced mechanical governor throttle shaft bushings; yoke binding.
4. Worn mechanical governor linkage, excessive end play.
5. Injection pump plunger stuck; pump rack stuck.

Engine Overheats

1. Leaky cylinder head gasket; leaky gaskets or seals.
2. Turbocharger. Restricted air intake, clogged air cleaner; nozzle ring restricted, slow charger rpm; binding charger impeller.
3. Injection pump internal adjustment incorrect; worn pump shaft bearings; loose pump drive, timing incorrect.

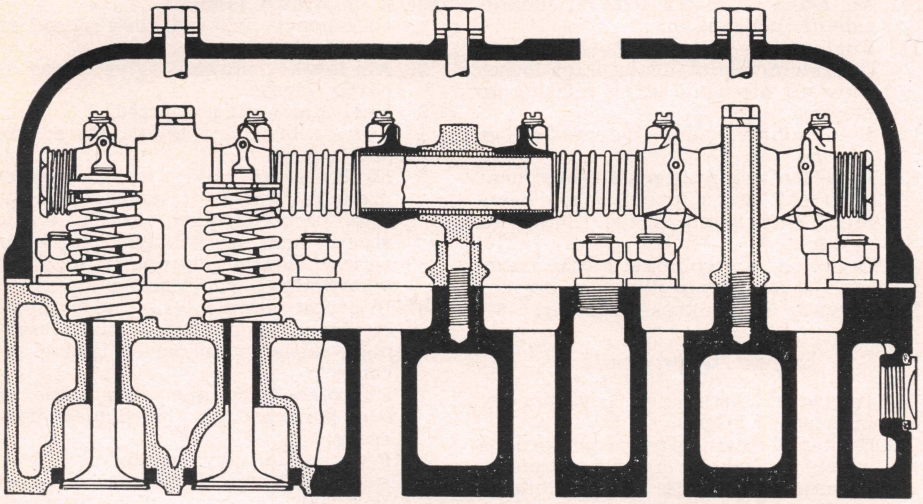

Fig. 6 Cylinder head and valve mechanism

4. Nozzle pintle stuck.
5. Improper valve clearance; worn camshaft or lifters; broken or weak valve springs; valve guides worn or gummed; valves stuck or burned.
6. Piston rings stuck, worn, broken or improperly fitted.
7. Turbocharger passing oil; restricted air intake; nozzle ring restricted; charger impeller blinding.

Fuel Consumption Excessive

1. Fuel tank or filters cracked or drain plugs loose.
2. Faulty nozzle spray, leaky, opening pressure incorrect; nozzle cap nut improperly torqued; nozzle pintle stuck; bent or broken spindle or spring; nozzle improperly installed in cylinder head.
3. Leaky cylinder head gasket; leaky gaskets or seals.
4. Poor compression.
5. Improper valve clearance; worn camshaft or lifters; broken or weak valve springs; valve guides worn or gummed; valves stuck or burned.
6. Injection pump internal adjustment incorrect; worn pump shaft bearings; loose pump drive; timing incorrect.
7. Injection pump internal adjustment incorrect; worn pump shaft bearings; loose pump drive; timing incorrect.
8. Improper setting of governor or high speed stop.
9. Scuffed pistons or cylinder sleeves.
10. Turbocharger passing oil; restricted air intake; clogged air cleaner; nozzle ring restricted; binding charger impeller.
11. Improper rack, gap, cam angle or cam plate setting (mechanical governor).

Lube Oil Consumption Excessive

1. Clogged crankcase breather or pipe.
2. Leaky cylinder head gasket; leaky gaskets or seals.
3. Turbocharger passing oil.
4. Valve guides worn or gummed.
5. Piston rings stuck, worn, broken or improperly fitted.
6. Scuffed pistons or cylinder sleeves.
7. Blow-by.

Excessive Fuel Pressure

1. Fuel return line plugged or crimped.
2. Injection pump overflow valve leaky, stuck open or closed.

Excessive Oil Pressure

1. Restriction in lube oiling system; faulty gauge.
2. Pressure relief valve stuck closed or faulty oil pump relief valve.

No or Low Oil Pressure

1. Restriction in lube oiling system; faulty gauge.
2. Pressure relief valve stuck closed or faulty oil pump relief valve.
3. Excessive clearance in main or rod bearings.

Low Compression

1. Piston rings stuck, worn, broken or improperly fitted.
2. Scuffed pistons or cylinder sleeves.
3. Blow-by.
4. Leaky cylinder head gasket; leaky gaskets or seals.
5. Improper valve clearance; worn camshaft or lifters; broken or weak valve springs; valve guides worn or gummed; valves stuck or burned.

Crankcase Build-up

1. Blow-by.
2. Leaky cylinder head gasket; leaky gaskets or seals.
3. Piston rings stuck, worn, broken or improperly fitted.
4. Scuffed pistons or cylinder sleeves.

CYLINDER HEAD

Cylinder heads are cast in "threes". Heads should be tightened in the sequence shown in Fig. 1 to 150 lbs. ft. torque. Loosen water and air inlet and exhaust manifolds while tightening. Use new stud nuts at overhaul. Do not use sealing compound on gaskets.

End core hole plugs (large) are 1¾"-18 (used with "O" ring), coat with National Machine Products "Oil and Water Sealer" at assembly. Tap core hole plugs (3.4" pipe) finished flush with head.

ROCKER ARMS

The rocker arm shaft, Fig. 6, is drilled for bottom feed to rocker arms. Install shafts with oil holes down. Rocker arm bracket stud nut torque is 35-40 lbs. ft.

Rocker arm shaft outside diameter is 1.1286" to 1.1291". Bushing inside diameter is 1.1296" to 1.1301". Bushing to shaft clearance should be .0005" to .0015". Rocker arms should not be rebushed locally but exchanged for factory rebushed and ground replacements.

INJECTOR NOZZLE SLEEVE

The sleeve is stainless steel, wet type. The bore in the cylinder head for the large end (A, Fig. 7) of standard sleeve is 1.216" to 1.128". Bore for small end (B) is 1.062" to 1.064". Diameter of standard sleeve at (A) is 1.2205" to 1.2210". Diameter at (B) is 1.0665" to 1.0670". Press fit of sleeve in cylinder head at both (A) and (B) is .0025" to .005" tight.

To remove the sleeve, tap ½" pipe threads in opening and withdraw sleeve with a suitable puller. To install sleeve, heat cylinder head to 180 deg. and apply a suitable oil and water sealer to the sleeve surfaces indicated in Fig. 7 and press into place using a suitable guide.

VALVES

When valves are ground the maximum face run-out should not exceed .0015". Use new or test approved Thompson positive exhaust valve rotators and new keys.

VALVE SEAT INSERTS

Intake and exhaust valve seats are similar except for diameters. Seat width should be $\frac{1}{16}$" to $\frac{3}{32}$". Maximum seat run-out should be .0015". Oversize seats available are .015, .031, .047 and .062 inches. Shrink seat inserts in dry ice and acetone before installing them in cylinder head.

Bore in head for standard intake seat is 2.437" to 2.438". Outside diameter of standard size intake seat is 2.4395" to 2.4405". Press fit of intake seat insert in head is .0015" to .0035" tight.

Bore in head for standard exhaust valve seat insert is 2.082" to 2.083". Outside diameter of standard exhaust seat insert is 2.0845" to 2.0855". Press fit of

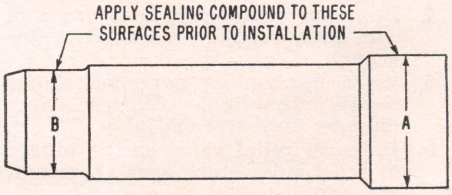

Fig. 7 Nozzle sleeve

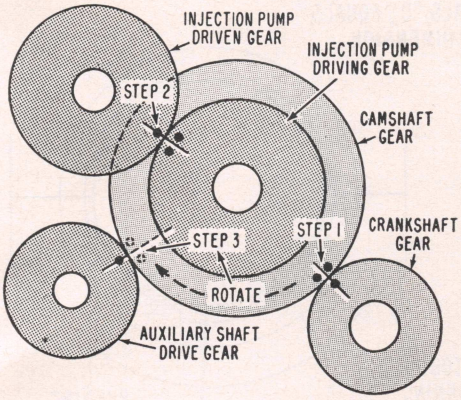

Fig. 8 Indexing timing gears

exhaust seat insert in head is .0015″ to .0035″.

VALVE SPRINGS

The free length of the inner valve spring is $3\frac{1}{32}$″. Test for 82.1 to 86.4 lbs. when compressed to $2\frac{1}{32}$″. Service limit is 77.2 lbs.

The free length of the outer spring is $3\frac{13}{32}$″. Test for 105.3 to 110.8 lbs. when compressed to $2\frac{5}{32}$″. Service limit is 94.5 lbs.

VALVE GUIDES

Valve guides are installed from deck side of head, relieved end first. Guides should be pressed in the head .0011″ to .0026″ tight. Guides should extend $1\frac{13}{16}$″ from cylinder head deck to face of guide.

Reamed inside diameter of exhaust guide should be .501″ to .502″; for intake guides .4995″ to .5005″.

VALVE LIFTERS

Valve lifters are carbide faced, mushroom type with a nominal lift of $\frac{5}{16}$″. Bore in block for valve lifter is .6865″ to .6890″. Diameter of lifter is .6855″ to .6860″. Clearance of lifter in block is .0005″ to .0035″.

TIMING GEARS

Timing gear backlash is .002″ to .004″. Install gears with mating numbers facing outward. Index dot on large camshaft gear between the two dots on the crankshaft gear, Fig. 8. Index the injection pump and governor drive gear with small camshaft gear, and index auxiliary drive gear with large camshaft gear in the same manner.

A composition front seal is pressed into the timing gear cover. Use centering sleeve when installing cover to assure alignment of seal and crankshaft. Centering sleeve can be made locally to the dimensions shown in Fig. 9.

CAMSHAFT

The camshaft is drop-forged, seven journal, gear driven. Camshaft end play is .008″ to .014″ and is adjusted by thrust button on the gear cover.

To remove and install the camshaft, rotate the crankshaft until the timing dots are toward the top of the engine and in line with the vertical web or crankcase. Crankshaft counterweights will interfere with camshaft if not lined up in this manner.

CAMSHAFT BEARINGS

There are seven pre-sized, steel-backed babbitt bearings used. They are pressed into the case .0025″ to .0055″ tight for Nos. 1 through 6, and .002″ to .004″ tight for No. 7. The inside diameter of the bearings when pressed in place should be 2.441″ to 2.443″ for Nos. 1 through 6 and 2.2535″ to 2.2540″ for No. 7.

Camshaft bearing journal diameters are 2.439″ to 2.440″ for Nos. 1 through 6 and 2.251″ to 2.252″ for No. 7. Journal-to-bearing clearance is .001″ to .004″ for Nos. 1 through 6 and .0015″ to .0035″ for No. 7.

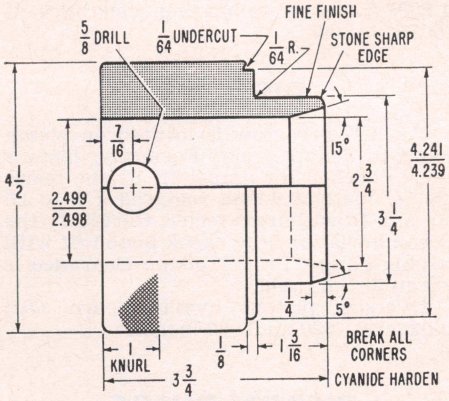

Fig. 9 Dimensions for making timing gear cover centering sleeve

Bearings are available for .015″ undersize camshaft journals. Oil holes in bearings and case of Nos. 1 through 6 bearings must be aligned. Remove burrs after installation of bearings.

AUXILIARY DRIVE

The auxiliary drive shaft, Figs. 10 and 11, is drop forged, two journal, gear driven. A tachometer drive gear is integral with the shaft. The oil pump drive gear and compressor drive is dog keyed to the shaft. The end thrust is taken by a washer pinned to the case and by a thrust button on the timing gear cover. End play should be .008″ to .014″ and is adjusted at the thrust button.

The front auxiliary drive shaft bearing is pre-sized, steel-backed babbitt. When pressed in the case its inside diameter is 2.0635″ to 2.0640″. The front shaft journal diameter is 2.061″ to 2.062″. Journal-to-bearing clearance is .0015″ to .002″.

The rear auxiliary drive shaft bearing is also pre-sized, steel-backed babbitt. When pressed in the case its inside diameter is 2.0005″ to 2.0010″. The front shaft bearing journal diameter is 1.998″ to

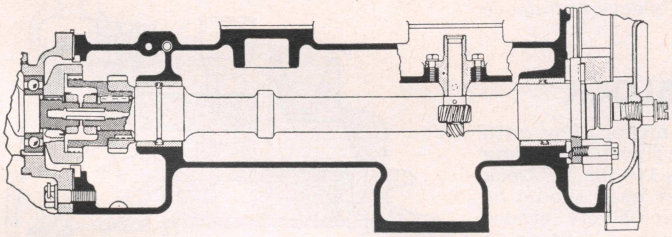

Fig. 10 Auxiliary drive for natural breathing engines

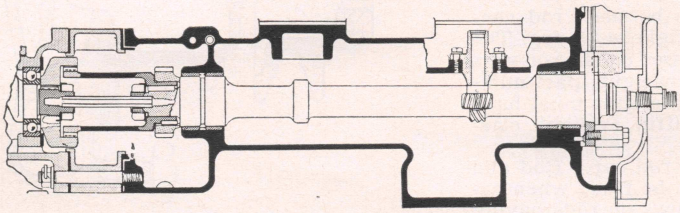

Fig. 11 Auxiliary drive for turbocharged engines

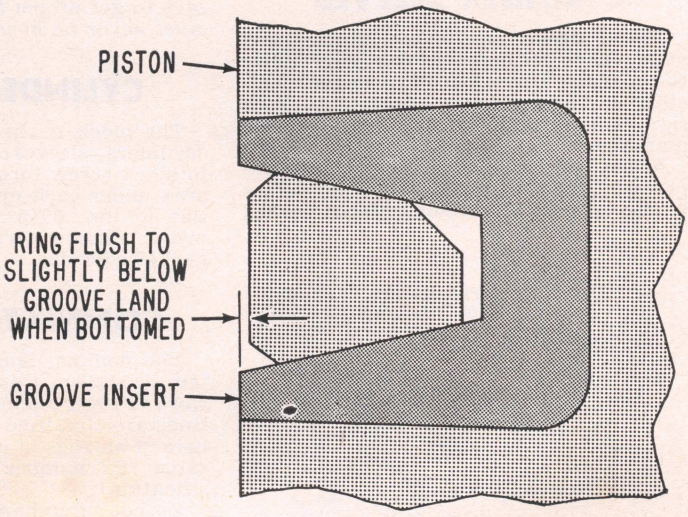

Fig. 12 Checking fit of No. 1 piston ring

1.999″. Journal-to-bearing clearance is .0015″ to .003″.

PISTONS

An "F" or arrow is located on piston head to denote front. Formerly, pistons were checked for proper fit by the feeler gauge method which required a 5 to 20 lb. pull to withdraw feeler. Currently the recommedation is to check piston fit with a plug gauge. Proper piston clearance is given in the table.

Oversize pistons available are .001, .002, .003, .020 and .030 inches.

PISTON RINGS

To check the fit of the top ring in the piston, press the ring into the ring groove. When bottomed, the ring face should be flush with or slightly below the groove lands as shown in Fig. 12.

When installing oil rings, extreme care must be taken to avoid bending ring rails. To check oil control rings for proper tension prior to installation, lay ring on a clean surface with equalizer in place. The gap should be as shown in Fig. 13. When installing ring in piston, position butt of equalizer 180 deg. from ring gap.

PISTON PIN

Pin Fit In Rod Bushing—Pin is to be fitted in connecting rod bushing with from .0007″ to .0011″ clearance (.0009″ desired). When installed, split in bushing should be on horizontal axis—never in area of the load.

Pin Fit In Piston Bosses—The fit in piston bosses should be .0001″ tight to .0002″ loose. Pins should be selected to obtain this fit if possible. The fit should be such that after heating the piston in boiling water for two minutes and then quickly trying pin in piston, pin should slide in with a slight push of the thumb.

CYLINDER SLEEVES

These sleeves are Parco-lubrited and should never be honed as this will remove the coating. The outside and inside diameters of these sleeves are held to such figures as to maintain the desired inside diameter when in place.

When installing new sleeves, it is important that the cylinder shoulder recess in the cylinder block be carefully cleaned out after the sleeve has been pressed in to within approximately ¼″ of the shoulder, but before the final seating. Fig. 14 shows cylinder sleeve details.

In servicing the engine it is important to note that out-of-round or taper of bore does not exceed the maximum of .002″. If necessary, rebore cylinder for a sleeve of .012″ oversize. Sleeve press fit in the cylinder should be from .000″ to .002″ tight. Dry ice should be used to shrink the sleeve.

Cylinder bore may be honed if necessary to get proper fit of sleeve *but sleeve must never be honed.*

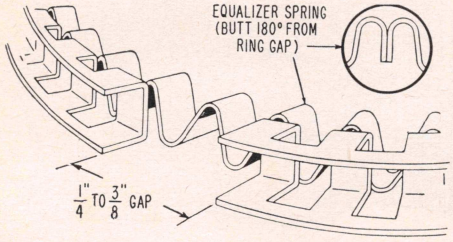

Fig. 13 Checking tension of oil control piston rings

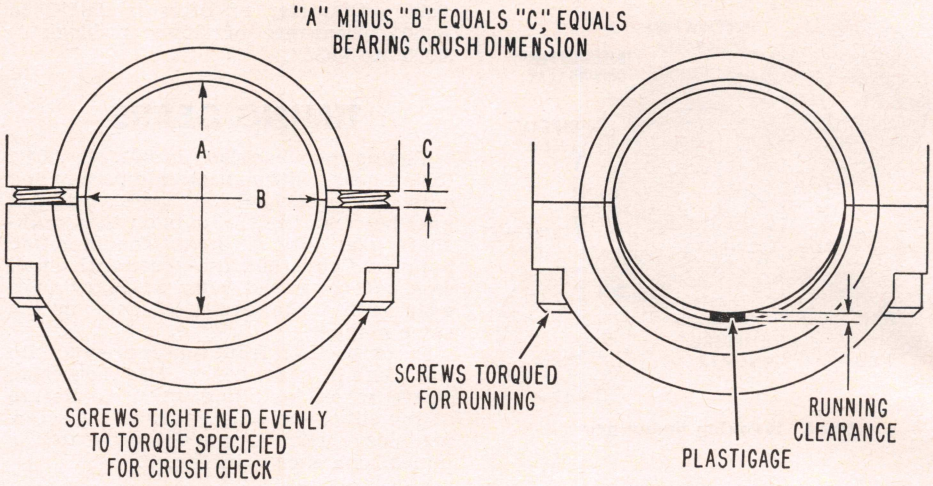

Fig. 15 Connecting rod bearing fit

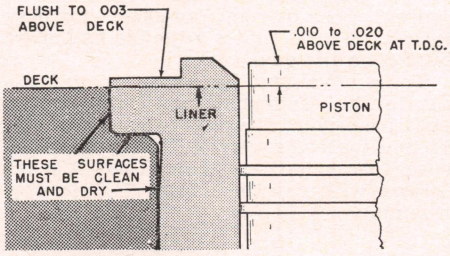

Fig. 14 Cylinder sleeve shoulder detail

CYLINDER BLOCK

The block is chrome-nickel alloy with dry liners (sleeves). The flywheel housing to block screw torque is 140 lbs. ft. Deck area under each cylinder head should be flat within .0015″. Excessively eroded water transfer ports must be built up to gasket hole size.

CONNECTING RODS

The nominal length between rod centers is 11.250″. Cap angle is 35 deg. The word "Front" is embossed on the rod web. Rods are classified by weight; part numbers of all rods in each engine must have same "P" number suffix (weight classification).

Do not interchange rod caps. Rod and cap thrust faces must be flush when assembled. Use new screws on rods having over 50,000 miles of service.

ROD BUSHING

A split bronze bushing is used. Free outside diameter push fit when bore is 1.6940″; "no go" in 1.6925″ bore. Connecting rod bore for bushing is 1.6875″ to 1.6885″. See *Piston Pin* for fit in bushing. Bushing hole must be aligned in rod.

ROD BEARINGS

These bearings are precision type with locking tongues, steel-backed, copper lead. Bearing crush fit in rod cap is .002″ to .003″ with 18 lbs. ft. torque on cap screw, Fig. 15.

The inside diameter of bearings in place is 2.9991″ to 3.0006″. Crankpin diameter is 2.9975″ to 2.9980″. Bearing-to-crankpin running clearance is .0011″ to .0031″ with 150 lbs. ft. torque on cap screws.

Available undersizes are .002, .010, .020, .030, .040, .050 and .060 inches.

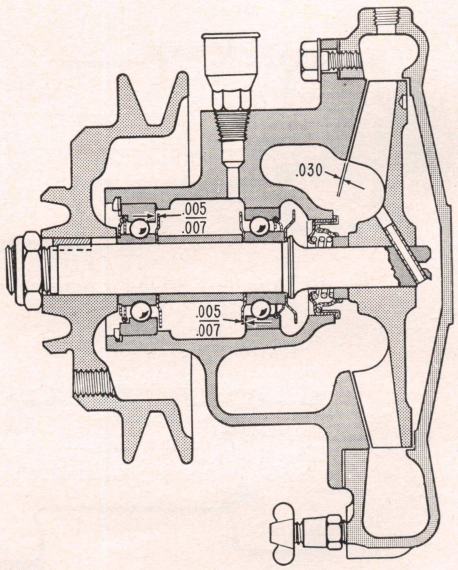

Fig. 16 Sectional view of water pump

MAIN BEARINGS

Seven precision type, steel-backed, copper lead with babbitt overlay bearings are used. The case bore for the bearings is 4.251″ to 4.252″. Bearing crush fit is .001″ to .002″ with 15 lbs ft. screw tension for bearing Nos. 2, 3, 5, and 6; 18 lbs. ft. for No. 1, and 12 lbs. ft. for Nos. 4 and 7.

When in place the inside diameter of bearings is 4.0010″ to 4.0030″. Main bearing journal diameters and running clearance are listed in the bearing table.

Available undersize service bearings are .002, .010, .020, .030, .040, .050, .060 inches.

Crankshaft end thrust is taken on No. 4 bearing by thrust washers. End play is .004″ to .011″ and is obtained by thrust washer selection. Thrust washer thicknesses are .090″ to .091″, .092″ to .093″ and .102″ to .103″.

Do not interchange main bearing caps. Be sure No. 4 case and cap thrust faces are flush when installed.

CRANKSHAFT

Maximum journal out-of-round or taper of crankshaft journals is .0015″. Maximum run-out at No. 4 bearing journal with Nos. 1 and 7 main journals supported in V blocks is .0015″.

Flywheel bolt press fit in flange should be .0005″ to .002″ tight. Vibration damper-to-hub capscrew torque is 43 lbs. ft.

When main journals are reground, fillets are sized to .150″ to .170″ and polished with No. 240 sandcloth.

CRANKSHAFT REAR OIL SEAL

The lead wire crankshaft rear oil seal is carried by a bolt-on oil slinger housing. The butt joint of the seal must be toward the top of the engine to assure oil control. Use a smooth wooden dowel to roll the seal in place.

LUBE OIL PUMP

The pump is the gear type driven by the auxiliary shaft. Gear-to-housing side clearance is .005″ to .009″. Gear-to-housing end clearance is .0015″ to .002″. Gear backlash is .027″ maximum. Relief valve spring free length is 3⅝″; test 25 lbs. at 2¾″.

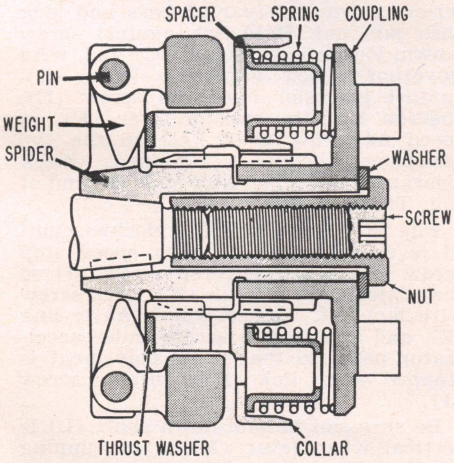

Fig. 18 Sectional view of synchrovance

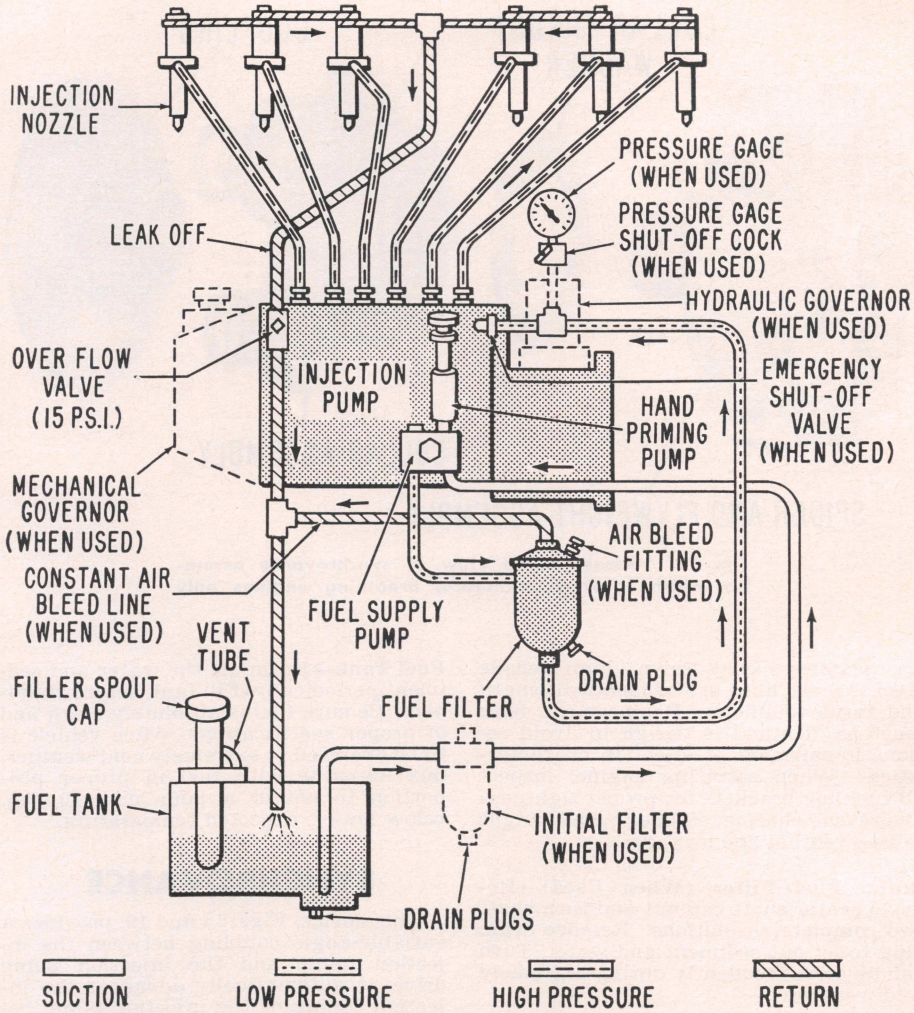

Fig. 17 Schematic diagram of Mack diesel fuel system

WATER PUMP

The water pump, Fig. 16, is belt-driven by the crankshaft. The pump shaft is supported by two ball bearings, lubricated by ball and roller bearing grease by grease cup.

Stationary carbon seal bears against rotor hub. Seal extension beyond cover boss is $\frac{5}{16}$″. Rotor blade-to-cover clearance is .030″ by location of pin hole in rotor. Use shaft hole as a jig when drilling $\frac{3}{16}$″ hole in new rotor. Slinger-to-outer bearing race clearance is .005″ to .007″ as indicated.

FUEL SYSTEM

The fuel system, Fig. 17, is the heart of the diesel engine. It serves to filter the fuel, meter the amount injected into the combustion chamber and inject it at the proper time to obtain peak performance.

All Mack naturally-aspirated engines are fitted with a synchrovance unit which advances the injection timing throughout the speed range.

Due to the combustion characteristics of a turbocharged engine, the injection timing is confined to a much narrower range and a fixed coupling provides satisfactory results.

A governor, either mechanical or hydraulic depending upon the engine model, provides a coupling between the accelerator linkage and the injection pump rack, thereby regulating fuel delivery in response to pedal position, load and engine speed.

Service Hints

Servicing of all units of the fuel system depends upon operating conditions and type of fuel used.

Injection Nozzles— Remove, test opening pressure and check spray pattern, *but only if trouble is indicated.* Observe for leakage from bleed line connections and nozzle cap nut. Both hold-down nuts should be tightened evenly to prevent binding internal parts.

High Pressure Fuel Lines—These lines

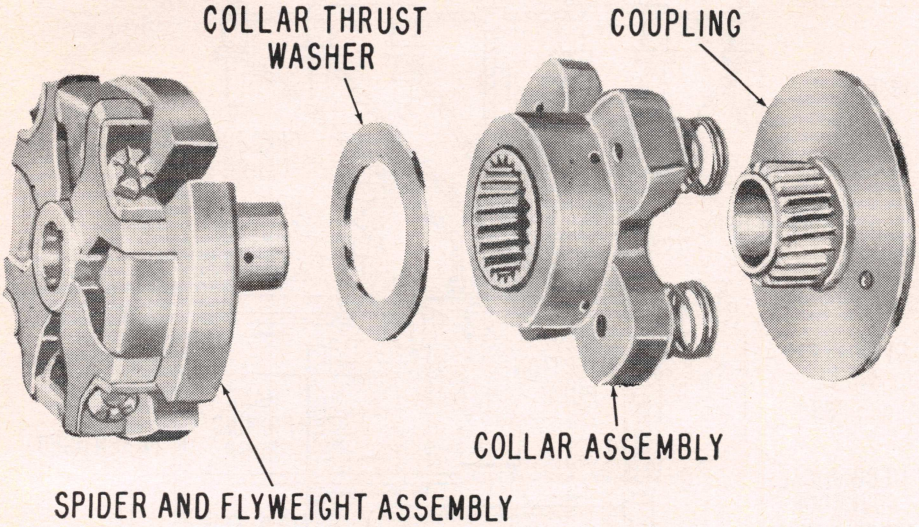

Fig. 19 Disassembled view of synchrovance assembly which is used on natural breathing engines only

are seamless, cold-drawn, high tensile steel. All six lines are of identical length and inside diameter. Replacement lines must be identical in design to avoid serious impairment of injection characteristics. When servicing engine, inspect all fuel line brackets for proper tightness to prevent chafing of lines which might cause eventual line leakage.

Initial Fuel Filter (When Used)—Remove center shaft cap nut and turn shaft two complete revolutions. Remove drain plug to let out sediment and water. Turn handle more frequently during extremely cold weather.

Fuel Filter—Filter element should be changed if fuel pressure (checked with engine running) drops below 3 lbs.

Constant Air Bleed (When Used)—The fuel piping is so arranged to provide a continuous air bleed line between the filter and injection pump gallery return line. Whenever the filter has been opened or a low pressure line disconnected, this line will automatically bleed the system when the hand priming pump is operated.

If a constant air bleed line is not installed, an air bleed fitting will be found on top of the filter. After installing a new element, open the air bleed and operate the hand priming pump until all air and foam are expelled from the filter body.

Fuel Pressure Gauge (When Used)—This gauge is installed in the fuel pressure line feeding the pump gallery. With the engine running under normal conditions the fuel pressure will be 12 to 15 lbs.

Pressure Gauge Shut-Off (When Used)—This cock is opened for checking fuel pressure and closed after reading is noted.

Hand Priming Pump—Operate the pump to bleed air from the low pressure system whenever a filter has been opened or a line disconnected; and also when making port closing test.

Fuel Tank—Drain off the water and sediment periodically. Fill tank before standover. Be sure fuel is absolutely clean and of proper specifications. When vehicle is to be operated in extremely cold weather, mix kerosene with fuel in proper proportion to obtain a pour pint 10 deg. below lowest expected temperature.

SYNCHROVANCE

This device, Figs. 18 and 19, provides a variable-angle coupling between the injection pump and the injection pump drive. It automatically advances the injection timing of the injection pump beyond the static setting as the engine speed increases so that, throughout the entire speed range, injection occurs precisely at the moment required for maximum performance.

The synchrovance is a matched, non-adjustable, calibrated unit, and parts are not interchangeable. Service is by replacement with a calibrated exchange assembly.

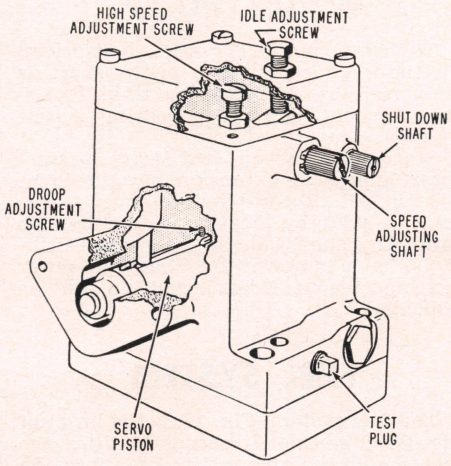

Fig. 20 Hydraulic governor internal adjustments

Removal and Installation

With injection pump removed from engine, loosen the coupling screw and remove coupling nut. Slide coupling, springs, spring spacers, collar and thrust washer off spider as an assembly. Position a suitable puller over the spider so that puller pins enter the two radial holes in the exposed portion of spider. Steady puller bridge with a suitable wrench and turn puller screw clockwise until spider breaks free.

To install, position key in key slot of injection pump tapered shaft and slide synchrovance into position. Place coupling washer on coupling nut and screw nut down tight. Tighten coupling screw to lock in place.

HYDRAULIC GOVERNOR

Governor action provides a coupling between the accelerator linkage and injection pump rack that regulates fuel delivery in response to pedal position, load and engine speed. Hydraulic pressure, developed by a self-contained gear pump, acts on a servo piston to move the rack. Oil flow to and from servo piston is controlled by a pair of spring-loaded flyweights (loading varied by pedal movement) which position a spool type pilot valve.

Internal Adjustments

Referring to Fig. 20, make adjustments with engine warm and running.

To make the droop screw adjustment, if the engine tends to "hunt", especially after a sudden throttle change, remove cover and turn droop screw *in* until engine just holds speed without hunting.

To make high speed adjustment, loosen high speed screw lock nut and hold speed adjusting lever against screw. Turn screw *in* to decrease or *out* to increase speed. Tighten lock nut and replace cover.

To adjust idle speed, have cover in place and adjust idle screw to obtain 500 rpm and lock in place.

Linkage Adjustments

Fig. 21. With throttle yoke (A) disconnected, set throttle link idle stop screw (B) with 1¼" dimension between screw crown and rear of boss and lock with jam nut. Hold link against screw crown, loosen lever screw (C) and, with governor speed adjusting lever (D) against governor idle stop screw (E), position throttle linkage lever (F) on speed adjusting shaft (G) so the $\frac{1}{16}$" dimension shown is obtained. Check clearance with a $\frac{1}{16}$" wire at lower end of slot. Tighten screw (C).

Fig. 22. Rotate lever (F) clockwise until lever (D) contacts high speed stop screw (H). Then set stop screw (J) so that it just touches link (K). Lock screw with jam nut. Connect yoke (A) to link (K) and adjust stop screw under accelerator pedal so that pedal movement is stopped when link (K) contacts screw (J).

Be sure slot in shut-down shaft (L) is vertical when lever (M) is in running position. Reposition lever if necessary. Check operation of this control.

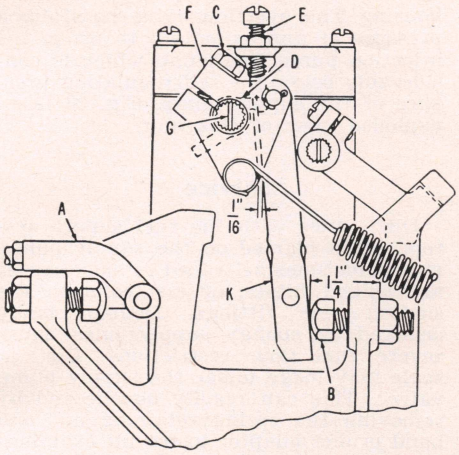

Fig. 21 Hydraulic governor linkage adjustments

Governor Gaskets

The gasket under the hydraulic governor and the gasket under its dust shield should be installed *dry* without use of shellac, cement or sealing compound. These materials, when used on the gasket, has been found to work into the governor and cause sticking of the pilot valve, servo piston and other moving parts, necessitating a reconditioning of the unit. In the case of the dust shield gasket, the compound runs directly into the servo piston.

The result of a sticking governor can be engine runaway and serious damage.

Droop Screw Looseness

The droop screw should be a snug fit in the torque control cam, Fig. 23. Should this screw fall out it would hold the servo piston in an open position.

Whenever the cover of a governor is removed for adjustment, check the droop screw for snugness with a suitable wrench. There should be a definite bind or resistance to turning.

If the screw is loose, tip the cam up so that the slot can be either spread open with a small screwdriver or pinched to close the gap with a pair of pliers. Use care to avoid breaking the cam.

The cam may be tipped sufficiently to perform this operation without removing it from the engine or dismantling.

FUEL INJECTION PUMP

Timing Pump to Engine

This procedure is outlined at the beginning of this chapter under *Tune Up.*

Pump Service

No service is required on the pump between major overhauls except the breather cap must be cleaned. When service is required, it must be performed by an American Bosch or Mack Authorized Service Agency.

Pump Adjustment

The only "adjustment" possible to the pump proper is made by adjusting the control rack setting to change the fuel delivered at full load and thus provide a change in engine output. In general this setting is established by the factory for the specific engine and should not be altered. In some cases, a change is permissible but should not be attempted without consulting an authorized Mack Service Agency.

In the event that a part load or low idle "miss" is encountered, or a sound similar to a connecting rod bearing knock or a piston pin knock is heard, the relation between the gear segment and the control sleeve should be checked. A line is inscribed in alignment between each segment and the control sleeve, following calibration. If any scribed lines are found to be out of alignment, loosen the gear segment clamping screw, reposition the control sleeve and retighten the gear segment clamping screw securely. This should only be done by an authorized Mack or American Bosch service station.

Misalignment of the scribed lines indicates the original setting has been disturbed and will result in the various cylinders receiving an unequal charge of fuel.

MECHANICAL GOVERNOR

The mechanical governor is a centrifugal unit mounted directly on the injection pump housing opposite the drive end. The prime purpose of the governor is to serve as a means of presetting and maintaining within close limits any desired engine speed with the nominal idling and maximum speed range, irrespective of engine load. In addition, the governor controls the engine idling speed to prevent stalling and the maximum speed to prevent racing.

The governor is driven by a gear mounted on the injection pump camshaft extending into the governor housing and engages a smaller driven gear mounted on the governor shaft. A torsion absorbing member is built into the drive gear to dampen torsional vibrations in the pump camshaft and drive for the protection of the governor components.

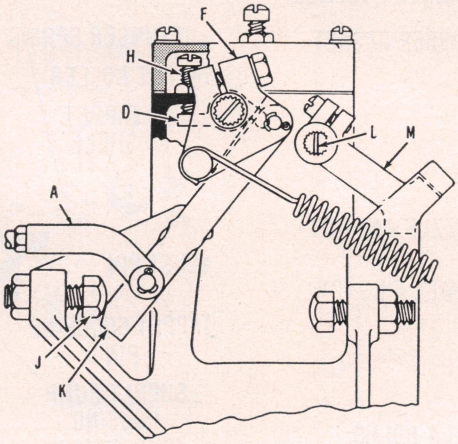

Fig. 22 Hydraulic governor linkage adjustments

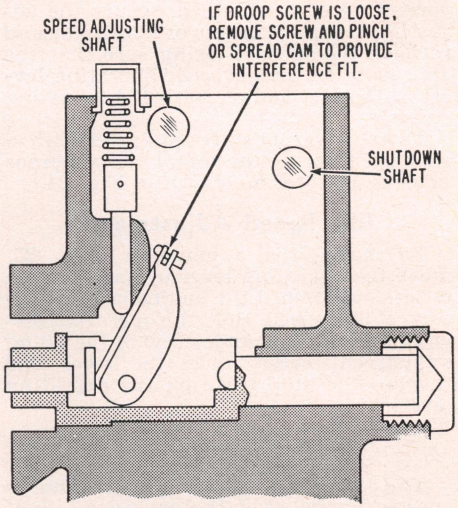

Fig. 23 Remedy for droop screw looseness on hydraulic governor

No service is required on the governor except the breather cap must be cleaned. Lubrication is automatically controlled from the injection pump housing.

Adjustment

Changes in engine speed should only be made when necessary to conform with speeds given in the Mack Operating Manual. The adjustments are originally set and sealed by the Mack Company.

The nominal engine idling speed and full load speed may be determined from the stamping on the governor name plate—for example GVB 250/1050C. The 250 indicates that the nominal idle governor speed is 250 rpm (500 rmp engine speed because the pump and governor are driven at one-half engine speed). The 1050 rpm or 2150 rpm is the nominal maximum engine speed under full rated load. When the engine is under no load, the speed will increase above this governed figure to what is termed a high idle speed (also known as no-load governor speed). This speed is shown in Mack Operating Manual which goes with the truck.

Before attempting to make governor adjustments warm up the engine thoroughly.

High Speed Adjustment

Fig. 24 illustrates a governor being adjusted for high idle speed. The operating lever in this case at the rear of the pump (not shown) has moved toward the full load position until the stop plate on the lever shaft has contacted the high speed adjusting screw. This screw is always the one nearest to the injection pump.

When the engine reaches its maximum speed, check by means of a tachometer whether or not this is the high idling speed specified in your instruction manual. If the speed is too low, raise the high speed adjusting screw and, if the speed is too high, lower the screw. After the

correct speed is obtained, secure the adjusting screw by means of a lock nut and recheck the speed, making sure that the stop plate on the governor operating lever shaft is in contact with the adjusting screw.

These governors are equipped with a shut-off lever at the top of the governor housing adapter as shown in Fig. 24.

Idle Speed Adjustment

To make this adjustment, Fig. 25, move the operating lever in the direction of less speed until the engine reaches the correct idle speed. Hold the operating lever in this position and screw in the idling adjustment screw until its lower end touches the stop plate on the operating lever shaft.

Service Note

The nominal idling and maximum speeds controlled by the governor cannot be varied to any great extent because they depend entirely upon the characteristics of the spring combination contained in the governor unit. If the governor adjustments are not sufficient to obtain the desired speed a Mack authorized service agency should be consulted for assistance in obtaining the required governor spring combination.

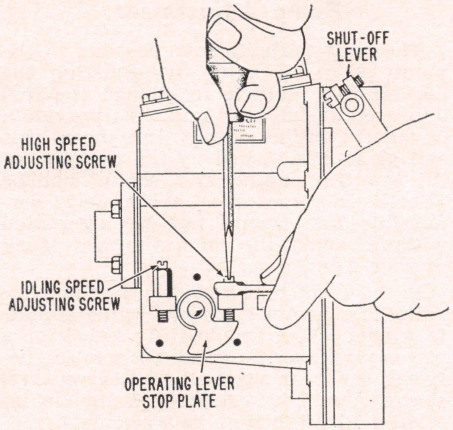

Fig. 24 High speed adjustment on mechanical governor

FUEL SUPPLY PUMP

The fuel supply pump draws fuel oil from the fuel tank of the vehicle and pumps it through the fuel filtering system into the injection pump. The pump is mounted directly on the housing of the injection pump and is driven by a cam on the injection pump camshaft. It is a self-regulating, plunger type pump which will build up pressure only to a predetermined point. The self-regulating feature is a safety device and is normally not called upon in regular operation. The pump is prevented from reaching its self-regulating pressure by an overflow valve located on one end of the fuel injection pump housing. This overflow valve maintains a pressure of approximately 15 psi in the injection pump fuel sump which is considerably below the self-regulating pressure of the supply pump. Fig. 26 is an exploded view of this unit.

Service

Difficulties with the fuel supply system, often blamed on the supply pump, may sometimes be traced to such causes as clogged filters, or air leaks on the suction side fittings. Dented, badly crimped or spongy supply lines cause severe fuel flow restrictions. Dirt or scale may lodge under the supply pump valves. This can readily be checked by removing the spring retaining nut and hand primer adapter to permit examination of the valves and their seats in the pump housing, Fig. 26.

If doubt still exists after this examination a 0 to 30 psi gauge can be installed

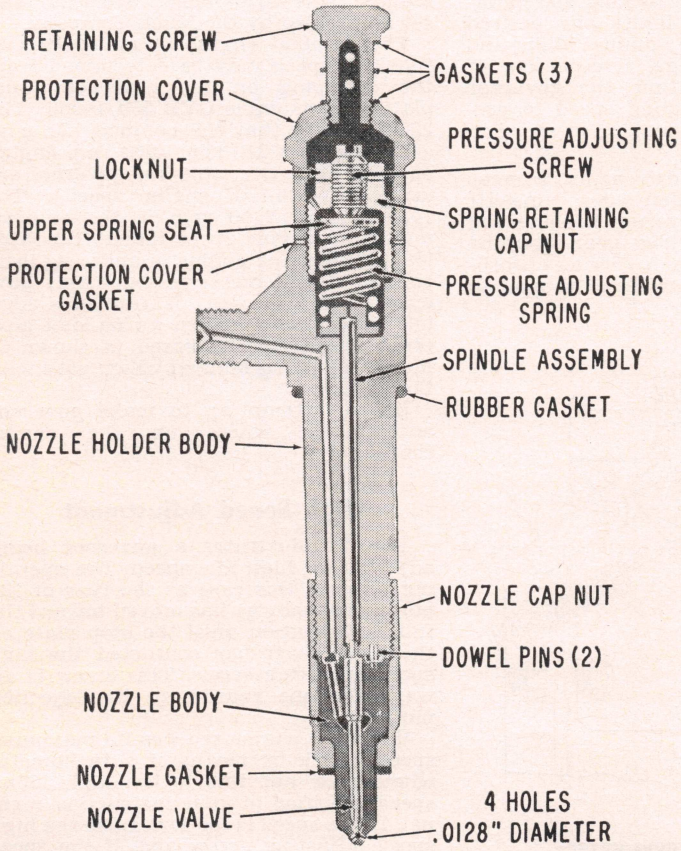

Fig. 27 Fuel nozzle and holder assembly

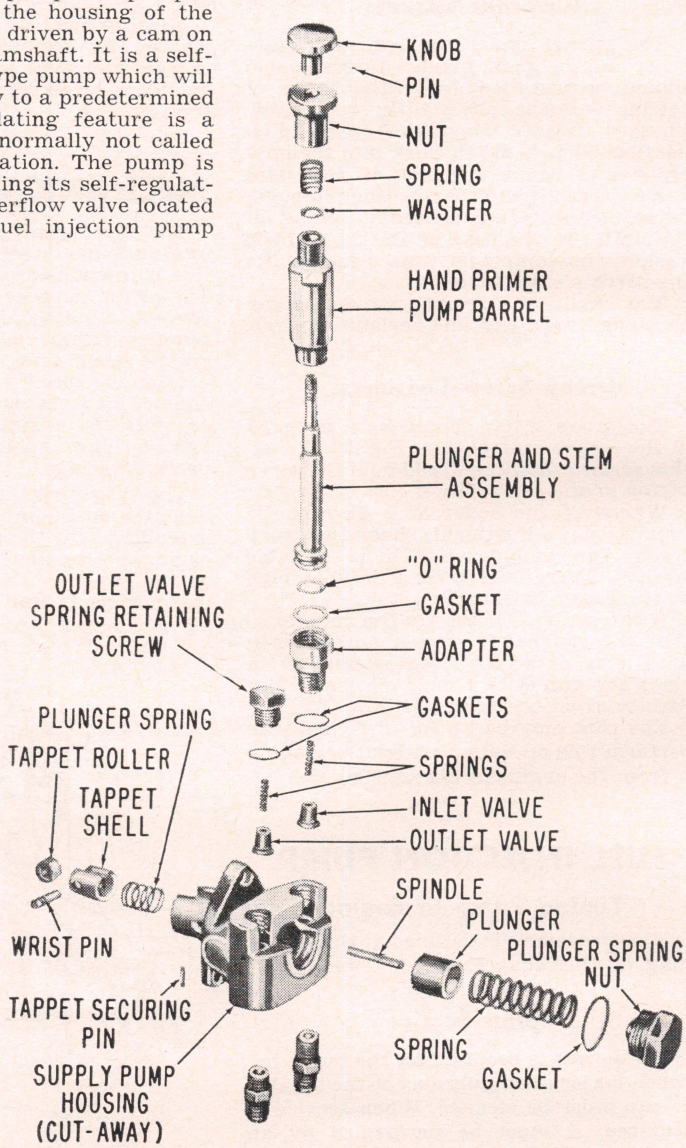

Fig. 26 Exploded view of fuel supply pump and hand primer assembly

at the fuel inlet of the injection pump. With the engine running, this reading should be approximately 15 psi, although satisfactory operation can be obtained at a minimum of 3 psi. If the pressure is within specified limits at this take-off point, the supply pump is satisfactory.

FUEL NOZZLE & HOLDER

The nozzle and nozzle holder, Fig. 27, is utilized to carry the high pressure fuel through the cylinder head to the combustion chamber and deliver it in the form of a fine spray through four equally spaced holes in the nozzle tip.

Service

It is very important that the injection nozzles work at peak efficiency. Generally speaking, it is wise to leave the nozzles alone in engines which are operating satisfactorily, as to disturb them only invites trouble, especially if the work is not done expertly. Any signs of engine miss or loss of power, however, suggests checking of the nozzles after all other conditions have been verified. In checking nozzles, carefully observe the following:

1. Extreme cleanliness is essential.
2. Clean the engine head especially around the nozzle holders before removing the holder and nozzle assemblies to prevent the entrance of dirt into the engine.
3. Test the nozzle and holder assemblies with a test stand for nozzle leakage, opening pressure and spray pattern. The nozzle must open between 2300 and 2350 psi. Check the spray pattern for four equal length sprays having no coarse stringers. *Relieve all nozzle spring tension before disassembling the nozzle from the holder to avoid damaging the nozzle locating dowel pins.*
4. If necessary, after the nozzle has been disassembled from the holder, clean the spray holes with the special cleaning needle held in a pin vise. Practice extreme care so as *not to break off the needle in the spray holes.*
5. Relieve all nozzle spring tension before assembling the nozzle to the nozzle holder to avoid damaging the nozzle dowel pins. The two dowel pins on the holder must be carefully aligned with the holes in the nozzle to insure the proper positioning of the spray holes.
6. Recheck the nozzle and holder assembly. If the performance is unsatisfactory, consult an Authorized Mack Service Agency for repairs.
7. Ream the carbon from the nozzle holder engine port. Use the reamer lightly, just enough to remove the carbon. A special brush (obtainable from Mack) should be used to clean the inner bore.
8. Always use a new nozzle cap nut gasket.
9. Slide the neoprene water sealing gasket on the nozzle and holder assembly in the engine.
10. Tighten the stud nuts to 168-204 inch lbs. (14-17 ft. lbs.) Tighten nuts evenly and do not exceed this torque.

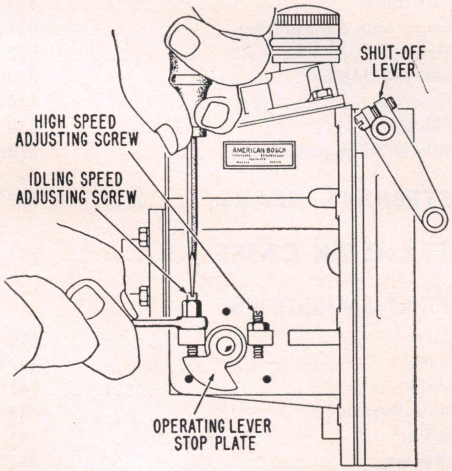

Fig. 25 Idle speed adjustment on mechanical governor

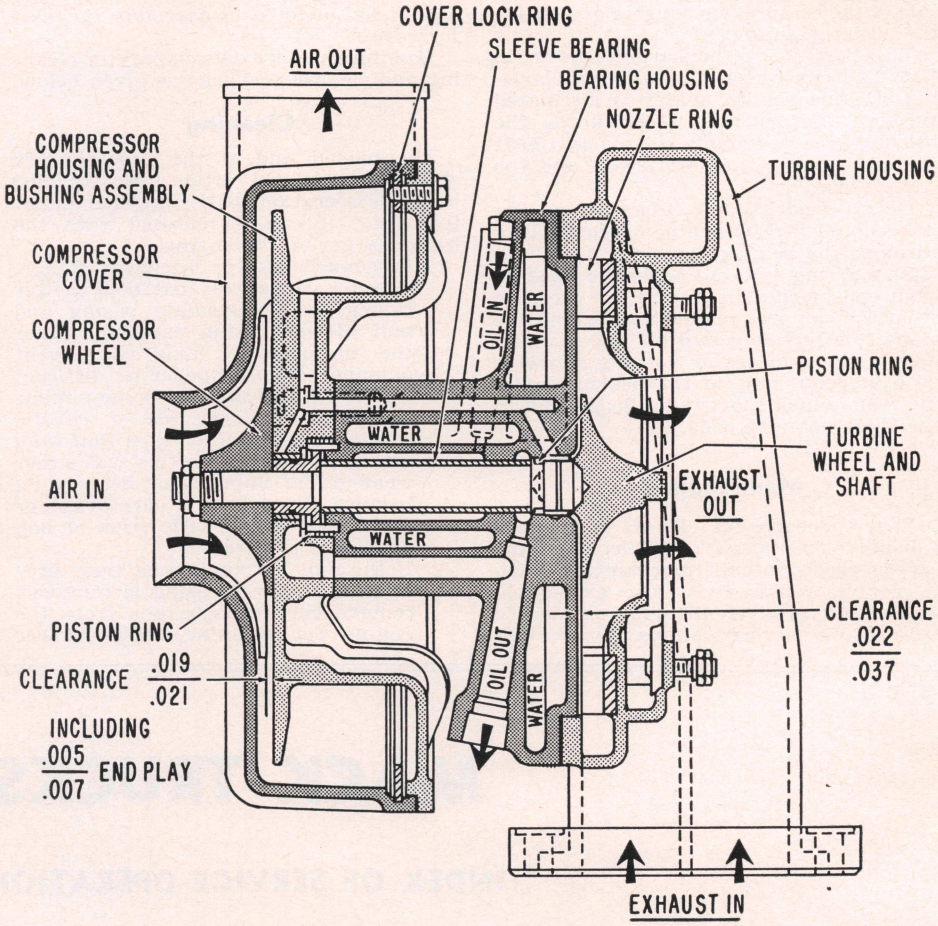

Fig. 28 Water-cooled turbocharger (5″ Series). Currently used 4″ Series is oil cooled

TURBOCHARGER

This unit, Fig. 28, is essentially an exhaust driven blower or air compressor. Its purpose is to increase the air supply to the cylinders over that of a naturally aspirated engine. This increased supply of air allows the engine to burn more fuel, which in turn produces more power, and incidentally results in cooler engine operation.

The turbocharger consists of the following main parts: the turbine, the bearing housing, and the compressor. The turbine is located at one end of the bearing housing, the compressor at the other end. A shaft connects the turbine wheel with the compressor wheel, making it a wheel assembly. The wheels are also referred to as impellers or rotors.

The turbine makes use of some of the heat energy normally thrown out in the exhaust gas. The exhaust gas from the engine enters the turbine housing through the flange connection of the housing. The gas flows around the turbine housing and radially inward through a set of nozzles. These nozzles give the gas a high velocity before it enters the turbine wheel.

The exhaust gas pressure is converted into kinetic energy which acts upon and drives the turbine wheel. The turbine wheel in turn drives the compressor wheel which is basically a vane type centrifugal blower.

The air enters at the center of the compressor wheel and flows radially outward through a diffuser section into the compressor housing. The air leaves through a tangential outlet on the out-

side of the compressor housing and enters the intake manifold.

The Series 5 turbocharger, shown in Fig. 28, has a water-cooled bearing housing. Engine cooling water is circulated through the housing which keeps the bearing area cool and also acts as a heat barrier between the hot turbine and the compressor.

On all model 3 and 4 series, cooling is accomplished by engine oil circulating through the bearing housing.

Piston ring type oil seals are used at each end of the shaft with air pressure from the compressor directed behind the rings to effectively seal off oil. A radial hole in the compressor housing connects with an axial hole in the bearing housing from which short radial holes lead to the shaft near the ends.

Maintenance

The turbocharger is a high-speed (about 48,000 rpm at 2100 rpm engine speed) precision-built mechanism. When it requires repair, it is to be exchanged with a factory rebuilt unit, obtainable from Mack service stations. *No attempt should be made to disassemble the unit for repair.*

Maintenance consists mainly in cleaning and clearance checks as given below.

Cleaning

The blower end of the turbocharger should be cleaned after 1000 to 2000 h .rs of operation. If the impeller is not too dirty, it can be cleaned with the turbocharger on the engine.

1. Disconnect blower discharge flange. Remove capscrews that hold blower casing to intermediate casing and pull blower casing carefully along the turbocharger axis to prevent damage to the impeller or diffuser.
2. Use Bendix cleaner or some similar solvent, *but never use a caustic solution or any other type that may attack aluminum,* as this will either weaken the impeller or destroy its balance. *Never use a wire brush or scraper*—a brush with nylon or hog bristles is preferable.
3. If the unit is found to be very dirty when the blower casing is removed, remove the turbocharger from the engine for cleaning. With blower casing removed, immerse the impeller end of the turbocharger into the cleaning fluid *up to the edge of the intermediate casing* and allow it to soak. Use care not to rest the weight of the turbocharger on the impeller or on the end of the shaft.
4. At each cleaning, the turbine wheel cooling air holes from the back of the diffuser through the intermediate casing must be cleaned. This can be done by passing a wire through the holes and then using air pressure to blow out loose particles.

Clearance Checks

The clearance shown in Fig. 28 should be checked every 3000 hours of operation. The bearing housing assembly with rotors should be separated from the end housings to make this check. Do not disassemble the bearing housing assembly.

It is not possible to measure seal clearance without removing rotor, but there will be no seal wear unless there is bearing wear. If the clearances indicated in Fig. 28 are excessive, the assembly should be exchanged for a factory rebuilt unit.

MACK TRUCKS

INDEX OF SERVICE OPERATIONS

PAGE NO.

AXLES, DRIVING
Eaton Axle Service 176
Locking Differentials 169
Mack Axles 852
Timken Axle Service 209

BRAKES
Adjustments 252
Air Brake System 259
Hydraulic Brake System 250
Vacuum Brake Boosters 268

CLUTCH 840

COOLING SYSTEM
Cooling System Capacity 829
Water Pump Repairs 836

ELECTRIC SYSTEM
Alternators & Regulators 37
Dash Gauge Service 93
Distributor Specifications 831
Distributor Service 7
Generator Specifications 831
Generator & Regulator Service 27
Ignition, Transistorized 22
Ignition Timing 837
Starting Motor Specifications 830
Starting Motor Service 65
Starter Switch Service 85

PAGE NO.

ENGINE
Camshaft & Bearings 835
Crankshaft Bearing Specifications 832
Crankshaft End Play, Adjust 836
Crankshaft Oil Seal 836
Cylinder Head, Replace 834
Main Bearings, Replace 836
Piston Pins, Replace 836
Piston Rings, Replace 836
Piston & Ring Specifications 832
Pistons & Rods, Remove 835
Piston & Rod, Assemble 836
Pistons, Replace 836
Rocker Arm Service 834
Rod Bearings, Replace 836
Timing Gears 835
Valves, Adjust 834
Valves, Grind 835
Valve Guides, Replace 835
Valve Lifters 835
Valves, Remove 834
Valve Seat Inserts 835
Valve Specifications 830
Valve Springs 835

ENGINE OILING
Crankcase Capacity 829
Crankcase Ventilation 6
Oil Pump Repairs 836

PAGE NO.

FUEL SYSTEM
Carburetor Adjustments 837
Carburetor Governors 839
Crankcase Ventilation 6
Fuel Pump Service 104
L.P.G. Carburetion 109

SPECIFICATIONS
Carburetor Adjustment 837
Crankshaft & Bearing 832
Distributor 831
Generator & Regulator 831
Piston, Pin & Ring 832
Starting Motor 830
Tune Up 830
Valve 830
Wheel Alignment 832

STEERING GEARS 857

TRANSFER CASES 242

TRANSMISSIONS
Clark 110
Fuller 122
Mack 841
New Process 135
Spicer 141
Warner 164
Powermatic 281

TUNE UP SERVICE 2

Series	Engine Make	Engine Model	Crank-case Refill Capacity, Qts.	Cooling System Capacity, Qts.
B20	Mack	EN-291	8	28
B30	Mack	EN-331	8	28
B34	Mack	EN-401	8	34
B41	Mack	END-510		44
B42	Mack	EN-401	8	34
B43	Mack	END-673	29①	44
B44	Mack	EN-401	8	34
B50	Mack	EN-431A	13	48
B60	Mack	EN-464A	13	48
B61	Mack	END-673	29①	48
B62	Mack	EN-464A	13	48
B63	Mack	END-673	29①	44
B64	Mack	EN-464B	13	48
B65	Mack	END-673	29①	44
B66	Mack	EN-464B	13	48
B67	Mack	END-673	29①	48
B68	Mack	EN-540	13	52
B70	Mack	EN-707B	15	58
B71	Cummins	NH & NT		34
B72	Mack	EN-707C	15	62
B73	Cummins	NH & NT		44
B75	Mack	END-673	29①	62
B80	Mack	EN-707B	15	54
B80	Mack	EN-707C	15	54
B81	Mack	END-673	29①	48
B83	Cummins	NH & NT		50
B85	Cummins	NH & NT		50
B87	Cummins	NH & NT		50
B421	Mack	EN-401, 402	8	34
B422	Mack	EN-438	13	48
B426	Mack	EN-401, 402	8	34
B613	Mack	ENDT-673	31①	52
C41	Mack	END-673	29①	64
C47	Mack	END-673	29①	64
C49	Mack	END-673	29①	64
D20	Mack	EN-291	8	28
D30	Mack	EN-331	8	28
D42	Mack	EN-401, 402	8	34
D44	Mack	EN-401, 402	8	34
G73	Cummins	NH-220L		48
G75	Mack	END-673	29①	56
G733	Cummins	NT & NTO		48
G753	Mack	ENDT-673	31①	56
H60	Mack	EN-464A	13	48
H61	Cummins	NH		44
H62	Mack	EN-464A	13	48
H63	Mack	END-673	29①	48
H64	Mack	EN-464B	13	48
H65	Mack	END-673	29①	48
H66	Mack	EN-464B	13	48
H67	Mack	ENDT-673	31①	48
H69	Mack	ENDT-673	31①	48
LRX	Mack	END-673	29①	56
LRX	Cummins	NH & NT		56
LRSW	Cummins	NH & NT		48
LRVX	Cummins	NVH		136
LRVSW	Cummins	NVH		136
LVX	Cummins	NH & NT		50
LYSW	Cummins	NVH		136
N42	Mack	EN-401, 402	8	44
N60	Mack	EN-464B	13	50
N61	Mack	END-673	29①	58
N68	Mack	EN-540	13	56
N422	Mack	EN-438	13	56
N613	Mack	ENDT-673	31①	58

①—Less filter 15 qts.

See Mack Diesel chapter for service on these engines.
See Cummins Diesel chapter for service on these engines.

GENERAL ENGINE SPECIFICATIONS

ENGINE IDENTIFICATION—Engine model and serial number located on right front of cylinder block by timing case cover on Magnadyne engines; on Thermodyne engines on top of right front motor leg.

Engine Model	No. Cyls. & Valve Location	Bore & Stroke	Piston Disp. Cu. In.	Compression Ratio	Maximum Brake H.P. @ R.P.M.	Maximum Torque Lb. Ft. @ R.P.M.	Governor		Normal Oil Pressure
							No-Load Setting R.P.M.	Full-Load Setting R.P.M.	
291	6 In Block	3¾ x 4⅜	291	6.9	107 @ 2800	232 @ 1400	2950	2800	45–60
331①	6 In Block	4 x 4⅜	331	6.9	122 @ 2800	264 @ 1400	2950	2800	45–60
401, 402	6 In Block	4 1/16 x 5 5/32	401	7.3	150 @ 2800	330 @ 1400	2950	2800	45–60
431A	6 In Head	4⅛ x 5⅜	431	6.7	142 @ 2650	350 @ 1400	2650	2500	45–60
438	6 In Head	4 5/16 x 5	438	7.1	160 @ 2600	355 @ 1400	2750	2600	45–60
464A	6 In Head	4 7/16 x 5	464	7.5	185 @ 2800	380 @ 1400	2950	2800	45–60
464B	6 In Head	4 7/16 x 5	464	7.5	185 @ 2800	380 @ 1400	2950	2800	45–60
464B①	6 In Head	4 7/16 x 5	464	6.7	185 @ 2800	380 @ 1400	2950	2800	45–60
510A	6 In Head	4 7/16 x 5½	510	6.5	185 @ 2600	415 @ 1400	2550	2400	45–60
510B	6 In Head	4 7/16 x 5½	510	7.7	185 @ 2600	415 @ 1400	2750	2600	45–60
510C①	6 In Head	4 7/16 x 5½	510	7.7	185 @ 2600	415 @ 1400	2750	2600	45–60
540①	6 In Head	4 9/16 x 5½	540	7.2	185 @ 2400	445 @ 1300	2550	2400	45–60
707A	6 In Head	5 x 6	707	6.1	232 @ 2100	615 @ 1200	2150	2000	45–60
707B	6 In Head	5 x 6	707	6.4	232 @ 2100	615 @ 1200	2250	2100	45–60
707C	6 In Head	5 x 6	707	7.5	232 @ 2100	615 @ 1200	2250	2100	45–60
707C①	6 In Head	5 x 6	707	7.0	232 @ 2100	617 @ 1200	2250	2100	45–60

①—Latest production.

TUNE UP & VALVE SPECIFICATIONS

Engine Model	Firing Order	Spark Plugs		Ignition Timing		Cylinder Head Torque	Valve Face Angle	Valve Lash, Cold		Valve Spring Pressure, Lb. @ In. Length
		Type⑮	Gap	Timing Mark	Location			Intake	Exhaust	
291	153624	D14	.030	4BTC	Flywheel	100	②	.010	.025	66 @ 2¾⑩
331	153624	D14	.030	4BTC	Flywheel	100	②	.010	.020	66 @ 2¾⑩
401, 402⑬	153624	J6	.025	3BTC	Flywheel	100	②	.010	.020	66 @ 2¾⑩
431A	153624	J6	.025	10BTC	③	130④	②	.010	.025⑤	51 @ 2 21/32⑩
438①	153624	J6	.020	12BTC	Damper	130④	②	.014⑫	.030⑫	105 @ 1 11/16⑩
464A	153624	J6	.020	8BTC	Flywheel	130④	②	.010	.025	105 @ 1 11/16⑩
464B⑥	153624	J6	.020	8BTC	Flywheel	130④	②	.010	.025	105 @ 1 11/16⑩
464B⑦	153624	J6	.020	⑭	Flywheel	130④	②	.010	.025	105 @ 1 11/16⑩
510A⑧	153624	D14	.030	11BTC	Flywheel	130④	②	.010	.025⑤	105 @ 1 11/16⑩
510A⑨	153624	D14	.030	15BTC	Flywheel	130④	②	.010	.025⑤	105 @ 1 11/16⑩
510B	153624	J6	.025	8BTC	③	130④	②	.010	.025	105 @ 1 11/16⑩
510C①	153624	J6	.025	8BTC	Flywheel	130④	②	.015	.025	105 @ 1 11/16⑩
540①	153624	J6	.025	13BTC	Damper	130④	②	.014	.020	105 @ 1 11/16⑩
707A	153624	D14	.030	15BTC	③	150	②	.010	.025	110 @ 2 5/32⑩
707B	153624	D14	.030	13BTC	Flywheel	150	②	.010	.025	110 @ 2 5/32⑩
707B⑪	153624	D14	.030	16BTC	Flywheel	150	②	.018	.028	110 @ 2 5/32⑩
707C	153624	J6	.025	8BTC	Flywheel	150	②	.015	.025	110 @ 2 5/32⑩
707C①	153624	J6	.025	10BTC	Flywheel	150	②	.015	.025	110 @ 2 5/32⑩

①—Latest production.
②—Intake 30°, exhaust 45°.
③—Flywheel and vibration damper.
④—Short studs 100 lb. ft.
⑤—If engine has Invar push rods, clearance is .015″ cold.
⑥—With 7.5 compression ratio.
⑦—With 6.7 compression ratio.
⑧—Using "Clearomatic" pistons.
⑨—Using "Trunk Type" pistons.
⑩—Outer spring.
⑪—Special service head, spark plugs on left side, washer necessary to locate exhaust valve rocker arm.
⑫—Disregard instruction plate on manifold which gives .012 intake and .025 exhaust. Mack suggests replacing instruction plate.
⑬—The 402 engine is identical to the 401 except that the 402 has 34 cylinder head studs instead of 32.
⑭—With "Clearomatic" pistons 11°, with "Trunk" type pistons 13°.
⑮—Champion. Normal service.

STARTING MOTOR SPECIFICATIONS

Unit Part No. ①	Rotation ②	Brush Spring Tension, Ounces	No Load Test			Torque Test		
			Amperes	Volts	R. P. M.	Amperes	Volts	Torque Lb. Ft.
1107456	C	24–28	65	5.0	6000③	570	3.15	15
1107838	C	24–28	65	11.35	6000	450	7.5	15
1108863	C	36–40	100	23.0	8000	525	3.0	32
1108871	C	36–40	100	23.0	8000	525	3.0	32
1108874	C	36–40	100	23.0	8000	525	3.0	32
1108951	C	36–40	60	5.7	3300	675	3.15	30
1108956	C	36–40	65	11.3	5500	675	4.0	30
1109113	C	36–40	65	12.0	4500	725	4.8	44
1109151	C	36–40	65	11.4	6000	725	5.0	44
1109152	C	36–40	65	11.4	6000	725	5.0	44
1109441	C	36–40	70	11.3	4500	725	5.0	57
1109718	C	36–40	100	23.0	8000	525	3.0	32
1109729	C	36–40	100	23.0	8000	525	3.0	32
1113055	C	48 Min.	50	11.5	6000	500	3.3	22
1113309	C	48 Min	65	11.4	6000	500	3.2	28
1113330	C	48 Min.	65	11.4	6000	500	3.2	28
1113700	C	35 Min.	100	23.0	8000	500	3.0	28
1113708	C	35 Min.	100	23.0	8000	500	3.0	28
1113709	C	35 Min.	100	23.0	8000	500	3.0	28

①—Stamped on plate riveted to housing.
②—As viewed from drive end. C—Clockwise.
③—Free speed of 5000 R.P.M. for Bendix type motors.

DISTRIBUTOR SPECIFICATIONS

Unit Part No. ①	Rotation ②	Cam Angle, Degrees	Breaker Gap, In.	Condenser Capacity, Mfds.	Breaker Arm Spring Tension, Oz.	Centrifugal Advance Deg. @ R.P.M. of Dist.		Vacuum Advance		
						Advance Starts	Full Advance	Inches of Vacuum to Start Plunger Movement	Inches of Vacuum for Full Plunger Travel	Maximum Vacuum Advance, Dist. Degrees
1111541	CC	37	.018–.024	.20–.25	17–21	1 @ 350	8.5 @ 1100	4–6	9–11	15
1111780	CC	31–37	.022	.20–.25	17–21	1 @ 350	8.5 @ 1100	None	None	None
1111795	CC	31–37	.022	.20–.25	17–21	1 @ 275	10 @ 825	None	None	None
1111800	C	31–37	.022	.20–.25	17–21	1 @ 350	10 @ 1250	None	None	None
1111819	C	31–37	.022	.20–.25	17–21	1 @ 250	10 @ 1150	None	None	None
1111833	C	31–37	.022	.20–.25	17–21	1 @ 250	10 @ 1150	None	None	None
1111842	CC	31–37	.022	.20–.25	17–21	1 @ 275	12 @ 950	None	None	None
1111843	C	31–37	.022	.20–.25	17–21	1 @ 250	7 @ 825	None	None	None
1111844	C	31–37	.022	.20–.25	17–21	1 @ 250	7 @ 825	None	None	None
1111848	CC	31–37	.022	.20–.25	17–21	1 @ 300	9 @ 1100	None	None	None
1111849	C	31–37	.022	.20–.25	17–21	1 @ 250	8 @ 950	None	None	None
1111850	C	31–37	.022	.20–.25	17–21	1 @ 250	8 @ 950	None	None	None
1111878	C	31–37	.022	.20–.25	17–21	1 @ 250	8 @ 950	None	None	None

①—Stamped on plate riveted to housing.
②—As viewed from top; C—Clockwise. CC—Counter-clockwise.

GENERATOR & REGULATOR SPECIFICATIONS

★To Polarize Generator: For internally grounded systems, disconnect field lead from regulator and momentarily flash this wire to regulator battery erminal. For externally grounded systems, connect jumper wire from "hot" side of battery to armature terminal of generator.

Generator						Regulator					
							Cutout Relay				
Gen. No. ①	Rotation and Ground Polarity ③	Brush Spring Tension, Oz.	Rated Cap. Amps.	Gen. Field Ground Location★	Field Current	Reg. No. ②	Closing Voltage	Arm. Air Gap, In.	Voltage Setting	Current Setting	Current & Voltage Regulator Arm. Air Gap, In.
1102120	C-P	28	30	External	1.69–1.79④	1118839	12.6	.020	14.3	30	.075
1102716	C–P	28	30	External	1.75–1.95⑤	1118302	6.4	.020	7.3	36	.075
1102746	C–P	28	40	External	1.87–2.0⑤	1118842	6.4	.020	7.3	42	.075
1106637	C–P	23	25	External	1.13–1.27④	1118214	12.8	.020	14.3	25	⑨
1106753	C–P	20	50	External	1.70–1.95⑤	1118335	6.4	.020	7.2	50	.075
1106757	C–P	20	50	External	1.70–1.95⑤	1118832	6.4	.020	7.3	55	.075
1106759	C–P	20	50	External	1.70–1.95⑤	1118333	6.4	.020	7.2	50	.075
1106805	CC–P	20	50	External	1.37–1.50④	1118838	12.8	.020	14.5	50	.075
1106810	C–P	20	50	External	1.37–1.50④	1118339	12.8	.020	14.3	50	.075
1106822	C–P	20	50	External	1.37–1.50④	1118838	12.8	.020	14.5	50	.075
1106822	C-P	20	50	External	1.37–1.50④	1118939	12.6	.020	14.3	55	.075
1106827	C–P	20	50	External	1.37–1.50④	1118368	12.8	.020	14.5	50	.075
1106916	C-P	20	40	External	1.37–1.50④	1118886	12.6	.020	14.3	40	.075
1106920	C–P	20	50	External	1.37–1.50④	1118838	12.8	.020	14.5	50	.075
1117567	C–P	25	120⑥	Internal	1.9–2.1⑦	1118544	12.8	⑬	14.1	120	⑭

①—Stamped on plate riveted to housing.
②—Stamped on regulator base.
③—P—Positive. C—Clockwise. CC—Counter-clockwise; as viewed from drive end.
④—At 12 volts.
⑤—At 6 volts.
⑥—Maximum output, both field circuits operating.
⑦—At 12 volts each set of fields.
⑧—Cutout relay air gap, .057″; cutout relay point opening, .020″.
⑨—Voltage regulator air gap, .070″; current regulator air gap, .080″.
⑩—Cutout relay air gap, .055″; cutout relay point opening, .040″.
⑪—Actuating relay air gap, .038–.052″; point opening, .019–.023″.
⑫—Voltage regulator air gap, .017–.021″; current regulator point opening, .011–.016″.
⑬—Actuating relay air gap, .035–.042″; point opening, .024–.031″.
⑭—Voltage regulator air gap, .068–.082″; current regulator air gap, .088–.102″.

PISTON, PIN, RING, CRANKSHAFT & BEARING SPECIFICATIONS

Engine Model	Wristpin Diameter	Piston Clearance Top of Skirt	Ring End Gap (Minimum)		Crankpin Diameter ①	Rod Bearing Clearance	Rod Bolt Torque	Main Bearing Journal Diameter ①	Main Bearing Clearance	Main Bolt Torque
			Comp.	Oil						
291	1.125	.007	.013	.013	2.3725	.001–.003	60–65	2.9975	.001–.003	100–105
331	1.125	.007	.013	.013	2.3725	.001–.003	60–65	2.9975	.001–.0035	100–105
401	1.13	.003	.013	.013	2.3725	.001–.003	60–65	2.9975	.001–.0035	100–105
431A	1.31	.004	.015	.015	2.7475	.001–.003	60–65	②	③	150
438	1.31	.002	.015	.015	2.7475	.001–.003	④	②	③	150
464A	1.31	.0075	.015	.015	2.7475	.001–.003	④	②	③	150
464B	1.31	.0075	.015	.015	2.7475	.001–.003	④	②	③	150
510A	1.31	.008	.016	.016	2.7475	.001–.003	④	②	③	150
510B	1.31	.008	.016	.016	2.7475	.001–.003	④	②	③	150
510C	1.31	.008	.016	.016	2.7475	.001–.003	④	②	③	150
540	1.31	.002	.016	.016	2.7475	.001–.003	④	②	③	150
707A	1.43	.010	.017	.017	2.9975	.0015–.003	150	②	③	150
707B	1.43	.010	.017	.017	2.9975	.0015–.003	150	②	③	150
707C	1.43	.010	.017	.017	2.9975	.0015–.003	150	②	③	150

①—Crankshaft journal diameters are subject to a tolerance of plus or minus .0005″.
②—Numbers 4 and 7, 3.4970″; all others, 3.4975″.
③—Numbers 4 and 7, .002–.0045″; all others, .001–.0035″.
④—140–150 lbs. ft. with 9/16″ screws.

WHEEL ALIGNMENT SPECIFICATIONS

★Trucks with power steering, increase caster 2°.

Front Axle Model	Caster Degree ★	Camber Degree	Toe-In Inch	Kingpin Angle Degrees
"A" Models—4 Wheel Trucks & Dumpers				
200	1 to 2	1/4 to 1	1/8 to 3/16	8
300	1 to 2	1/4 to 1	1/8 to 3/16	8
400	1 to 2	1/4 to 1	1/8 to 3/16	8
500	1 to 2	1/4 to 1	1/8 to 3/16	8
"A" Models—6 Wheel Trucks & Dumpers				
500	1 to 2	1/4 to 1	1/8 to 3/16	8
"A" Models—4 Wheel Tractors				
400	2 1/2 to 3 1/2	1/4 to 1	1/8 to 3/16	8
500	2 1/2 to 3 1/2	1/4 to 1	1/8 to 3/16	8
"B" Models—4 Wheel Trucks & Dumpers				
201	1/2 to 1 1/2	1/2 to 1	1/8 to 3/16	8
301	1/2 to 1 1/2	1/2 to 1	1/8 to 3/16	8
505	1 to 2	1/2 to 1	1/8 to 3/16	8
510	1 to 2	1/2 to 1	1/8 to 3/16	7
522	1 to 2	1/2 to 1	1/8 to 3/16	7
600	1 to 2	1/2 to 1	1/8 to 3/16	3 1/2
5051	1 to 2	1/2 to 1	1/8 to 3/16	8
"B" Models—6 Wheel Trucks & Dumpers				
505	1 to 2	1/2 to 1	1/8 to 3/16	8
507	1 to 2	1/2 to 1	1/8 to 3/16	7
509	1 to 2	1/2 to 1	1/8 to 3/16	7
517	1 to 2	1/2 to 1	1/8 to 3/16	7
519	1 to 2	1/2 to 1	1/8 to 3/16	7
522	1 to 2	1/2 to 1	1/8 to 3/16	7
600	1 to 2	1/2 to 1	1/8 to 3/16	3 1/2
601	1 to 2	1/2 to 1	1/8 to 3/16	3 1/2
5051	1 to 2	1/2 to 1	1/8 to 3/16	8
5071	1 to 2	1/2 to 1	1/8 to 3/16	7
5091	1 to 2	1/2 to 1	1/8 to 3/16	7
5221	1 to 2	1/2 to 1	1/8 to 3/16	7
"B" Models—4 Wheel Tractors				
301	2 1/2 to 3 1/2	1/2 to 1	1/8 to 3/16	8
405	2 1/2 to 3 1/2	1/2 to 1	1/8 to 3/16	8
505	2 1/2 to 3 1/2	1/2 to 1	1/8 to 3/16	8
507	2 1/2 to 3 1/2	1/2 to 1	1/8 to 3/16	7
510	2 1/2 to 3 1/2	1/2 to 1	1/8 to 3/16	7
517	2 1/2 to 3 1/2	1/2 to 1	1/8 to 3/16	7
519	2 1/2 to 3 1/2	1/2 to 1	1/8 to 3/16	7
522	2 1/2 to 3 1/2	1/2 to 1	1/8 to 3/16	7
601	2 1/2 to 3 1/2	1/2 to 1	1/8 to 3/16	3 1/2
5051	2 1/2 to 3 1/2	1/2 to 1	1/8 to 3/16	8
5071	2 1/2 to 3 1/2	1/2 to 1	1/8 to 3/16	7
"B" Models—6 Wheel Tractors				
505	2 1/2 to 3 1/2	1/2 to 1	1/8 to 3/16	8
507	2 1/2 to 3 1/2	1/2 to 1	1/8 to 3/16	7

WHEEL ALIGNMENT SPECIFICATIONS continued

★Trucks with power steering, increase caster 2°.

Front Axle Model	Caster Degree ★	Camber Degree	Toe-In Inch	Kingpin Angle Degrees
510	2½ to 3½	½ to 1	⅛ to 3/16	7
517	2½ to 3½	½ to 1	⅛ to 3/16	7
519	2½ to 3½	½ to 1	⅛ to 3/16	7
522	2½ to 3½	½ to 1	⅛ to 3/16	7
700	1 to 2	½ to 1	⅛ to 3/16	3½
5071	2½ to 3½	½ to 1	⅛ to 3/16	7
"D" Models—4 Wheel Trucks & Tractors				
511	5 to 6	½ to 1	⅛ to 3/16	8
514	5 to 6	½ to 1	⅛ to 3/16	7
518	5 to 6	½ to 1	⅛ to 3/16	7
523	5 to 6	½ to 1	⅛ to 3/16	7
600	1 to 2	½ to 1	⅛ to 3/16	3½
"D" Models—6 Wheel Trucks				
511	1 to 2	½ to 1	⅛ to 3/16	8
514	1 to 2	½ to 1	⅛ to 3/16	7
518	1 to 2	½ to 1	⅛ to 3/16	7
523	1 to 2	½ to 1	⅛ to 3/16	7
600	1 to 2	½ to 1	⅛ to 3/16	3½
"E" Models—6 Wheel Trucks				
44	1 to 2	¼ to 1	⅛ to 3/16	8
44B	1 to 2	¼ to 1	⅛ to 3/16	8
"E" Models—4 Wheel Trucks				
36A	1 to 2	¼ to 1	⅛ to 3/16	8
44	1 to 2	¼ to 1	⅛ to 3/16	8
44B	1 to 2	¼ to 1	⅛ to 3/16	8
"E" Models—Tractors & C. O. E.				
36A	½ to 1½	¼ to 1	⅛ to 3/16	8
"G" Model—4 Wheel Tractor				
512	2½ to 3½	½ to 1	⅛ to 3/16	7
"G" Model—6 Wheel Truck				
512	1 to 2	½ to 1	⅛ to 3/16	7
"G" & "H" Models—6 Wheel Tractors				
511	2½ to 3½	½ to 1	⅛ to 3/16	8
512	2½ to 3½	½ to 1	⅛ to 3/16	7
513	2½ to 3½	½ to 1	⅛ to 3/16	7
514	2½ to 3½	½ to 1	⅛ to 3/16	7
523	2½ to 3½	½ to 1	⅛ to 3/16	7
"H" Models—4 Wheel Tractors				
511	2 to 3	½ to 1	⅛ to 3/16	8
512	2 to 3	½ to 1	⅛ to 3/16	7
513	2 to 3	½ to 1	⅛ to 3/16	7
514	2 to 3	½ to 1	⅛ to 3/16	7
523	2 to 3	½ to 1	⅛ to 3/16	7
"L" Models—4 Wheel Trucks & Dumpers				
25A	1 to 2	¼ to 1	⅛ to 3/16	7
26	1 to 2	¼ to 1	⅛ to 3/16	3½
46	1 to 2	¼ to 1	⅛ to 3/16	7
54	1 to 2	¼ to 1	⅛ to 3/16	3½
600	1 to 2	¼ to 1	⅛ to 3/16	3½
700	1 to 2	½ to 1	⅛ to 3/16	3½
800	1 to 2	½ to 1	⅛ to 3/16	3½
900	1½	1½	⅛ to 3/16	3½
901	1½	1½	⅛ to 3/16	3½
"L" Models—4 Wheel Tractors				
25A	2½ to 3½	¼ to 1	⅛ to 3/16	7
45B	2½ to 3½	¼ to 1	⅛ to 3/16	8
501	2½ to 3½	¼ to 1	⅛ to 3/16	8
504	2½ to 3½	¼ to 1	⅛ to 3/16	8
"L" Models—6 Wheel Trucks & Dumpers				
25A	1 to 2	¼ to 1	⅛ to 3/16	7
26	1 to 2	¼ to 1	⅛ to 3/16	3½
46	1 to 2	¼ to 1	⅛ to 3/16	7
48	1 to 2	¼ to 1	⅛ to 3/16	3½
54	1 to 2	¼ to 1	⅛ to 3/16	3½
561	2½ to 3½	¼ to 1	⅛ to 3/16	7
562	2½ to 3½	¼ to 1	⅛ to 3/16	7
600	1 to 2	¼ to 1	⅛ to 3/16	3½
800	1 to 2	½ to 1	⅛ to 3/16	3½
900	1½	1½	⅛ to 3/16	3½
901	1½	1½	⅛ to 3/16	3½
"L" Models—C. O. E.				
25A	½ to 1½	¼ to 1	⅛ to 3/16	8
26	½ to 1½	¼ to 1	⅛ to 3/16	3½
"N" Models—4 Wheel Trucks & Dumpers				
507	1 to 2	½ to 1	⅛ to 3/16	7
517	1 to 2	½ to 1	⅛ to 3/16	7
522	1 to 2	½ to 1	⅛ to 3/16	7
"N" Models—4 Wheel Tractors				
507	2½ to 3½	½ to 1	⅛ to 3/16	7
517	2½ to 3½	½ to 1	⅛ to 3/16	7
522	2½ to 3½	½ to 1	⅛ to 3/16	7
"W" Models—4 Wheel Tractors				
571	2 to 3	½ to 1	⅛ to 3/16	7
571A	2 to 3	½ to 1	⅛ to 3/16	7
572	2 to 3	½ to 1	⅛ to 3/16	7
572A	2 to 3	½ to 1	⅛ to 3/16	7
"W" Models—6 Wheel Tractors				
571	2½ to 3½	½ to 1	⅛ to 3/16	7
571A	2½ to 3½	½ to 1	⅛ to 3/16	7
572	2½ to 3½	½ to 1	⅛ to 3/16	7
572A	2½ to 3½	½ to 1	⅛ to 3/16	7

Engine Section

CYLINDER HEAD, REPLACE

All Engines

When removing a cylinder head a chisel or screw driver should never be used to pry it loose from the cylinder block. On L-head engines, use an eyebolt in the third or fourth spark plug hole, lifting up on the eyebolt while tapping lightly around the edges of the head with a lead or rawhide hammer or mallet. Be sure that all the head stud nuts or bolts have been removed before starting to remove the head.

In replacing the head, the stud nuts or bolts at the center of the head should be tightened first and then work outward from side to side and to the ends, Figs. 1, 2 and 3.

Draw the nuts or bolts down evenly until all are normally tight. Then after the engine has run long enough to warm it up, make a final tightening with a torque wrench to the torque loads given in the *Tune Up & Valve Specifications* table.

On overhead valve engines, be sure to check the valve clearances after the final tightening.

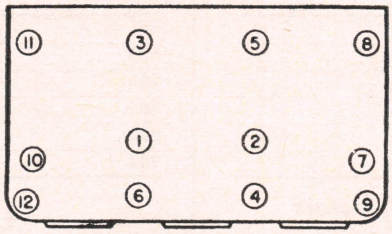

Fig. 1 Cylinder head tightening sequence. 431, 438, 464, 540 engines

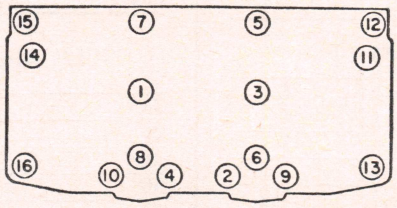

Fig. 2 Cylinder head tightening sequence. 707 engines

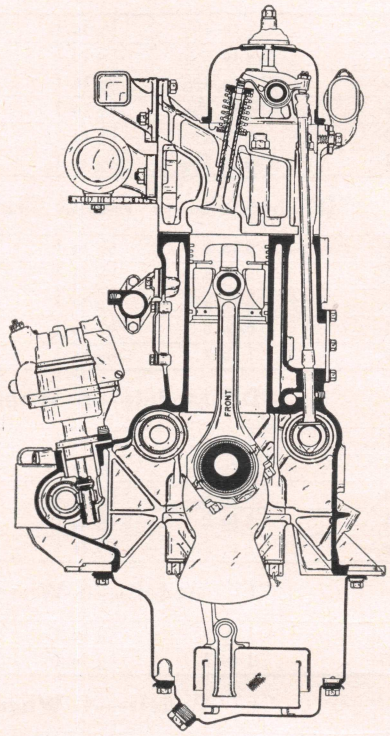

Section through EN-431A and 464 engines at piston and intake valve

ROCKER ARM SERVICE

Overhead Valve Engines

Sludge and gum formation in the rocker arms and shafts will restrict the normal flow of oil to the rocker arms and valves. Each time the rocker arm and shaft assemblies are removed, they should be disassembled and thoroughly cleaned.

When disassembling rocker arms, place all parts on the work bench in their proper sequence to insure correct assembly.

Clean all gum and sludge formation from the inside and outside of the shafts. Clean oil holes and passages in the rocker arms and shafts. Clean the oil connector. Inspect the shafts for wear.

Check the ball ends of the rocker arms to be sure they are not pitted or rough. If used in this condition, it will be difficult to mantain valve clearances.

VALVES, ADJUST

All Engines

Adjust the valves to the clearances given in the *Tune Up & Valve Specifications* table. If the valves are to be adjusted warm, run the engine for about 30 minutes to normalize the expansion of all parts.

On overhead valve engines, be sure the cylinder head is properly tightened down before adjusting valve clearances.

VALVES, REMOVE

L-Head Engines

After taking off the cylinder head, remove the valve chamber covers and use cloth to block off the holes in the valve chamber to prevent the valve locks from falling into the crankcase.

With a suitable valve spring compressor, raise the springs on those valves which are closed and remove the valve locks. Then turn the crankshaft until

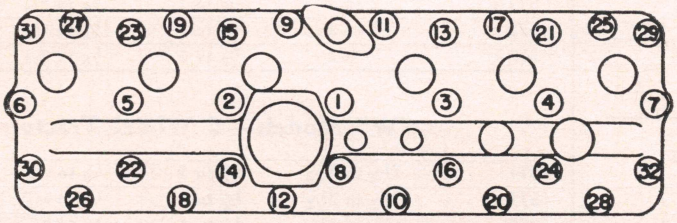

Fig. 3 Cylinder head tightening sequence. EN-291, 331 and 401 engines. The 402 engine has 34 studs

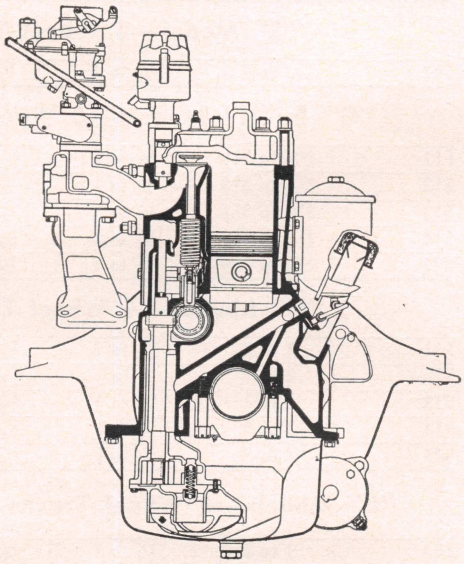

Section through EN-291, 331, 401 engines at intake valve

those valves which are open are closed and remove the remaining valve locks.

Remove all valves and place them in a board with numbered holes so that they can be identified as to the valve port from which they were removed.

Overhead Valve Engines

After removing the cylinder head and rocker arm assembly, use a suitable spring compressor to compress the springs. Remove the valve locks and springs. Check the keeper grooves in the valve stems for burrs and remove any burrs with a file to prevent scoring of valve guides. Remove the valves and place them in a board with numbered holes so they can be replaced in the same valve port from which they were removed.

VALVES, GRIND

All Engines

Clean the valves with a wire wheel brush, making sure that all carbon is removed from the top and bottom of the heads as well as the gum which might have accumulated on the stems.

In refacing valves, take off only the minimum amount of metal required to clean up the vlave faces. If the outer edge of the valve becomes too thin or sharp due to excessive grinding, the valve must be replaced. In other words, the valve head margin must be at least $\frac{3}{64}$", otherwise the valve must be replaced. This margin is the area above the contact surface of the valve face.

Inspect the valve seats in the block or head for cracks, burns, pitting, ridges or improper angle. During any general engine overhaul, it is advisable to reface the valve seats regardless of their condition. If new valve guides are required, they must be installed and reamed before refacing the seats if the equipment used for refacing has a valve guide pilot.

The valve seat width after refacing should be $\frac{5}{64}$" to $\frac{7}{64}$" on the intake. The width of exhaust seats should be $\frac{7}{64}$".

A simple check can be made to prove the fit of the valve in the valve seat by spreading a thin film of Prussian Blue on the valve face and inserting the valve in the valve seat. With hand pressure, rotate the valve ¼ turn, remove it and observe the transfer of Prussian Blue to the valve seat. An uneven transfer will indicate an inaccurate valve and valve seat operation.

VALVE SEAT INSERTS

All Engines

Since these inserts are too hard to reface by the ordinary hand grinding method, a high speed grinder or special lapping equipment should be used to perform this operation. When using this equipment, be sure valve guides are clean and the valve guide pilot is a snug fit in order to assure a concentric finish. Finished seats should be checked with a dial indicator and runout should not exceed .001".

To remove an insert (if a suitable puller is not available), drill two holes at opposite sides of the insert but not all the way through. Then cut out the undrilled portion with a sharp chisel and remove the two pieces.

To install a new insert, first remove all burrs and sharp edges from the seat recess. Then chill the new insert with "dry ice" to obtain maximum contraction of the metal and place it in the recess. If necessary, the insert may be pounded in by using a round driver the same size as the insert and pounding on same with a hammer.

If a standard insert is too loose, secure an oversize insert. Of course, the recess should be bored out to accommodate the oversize insert.

When installed, peen the block or head around the insert bore to insure the insert remains in place.

VALVE SPRINGS

After removing the valve springs, wash them with gasoline or other suitable solvent. Examine the springs for damage or corrosion due to acid etching, which will develop into surface cracks and cause spring failure.

Check the valve spring tension on a spring testing fixture if one is available. If not available, at least check the free length of each spring by standing it alongside a new spring. Any spring that does not conform to the pressure specifications given in the *Tune Up & Valve Specifications* table within 10% should be replaced. Likewise, any spring that stands shorter than the new spring used for comparison should be discarded. Of course, cocked springs should be scrapped.

VALVE GUIDES, REPLACE

Clean the valve guides with a wire guide brush and check the clearance between valve stems and guides. Excessive clearance will cause improper seating and burned valves. When there is too much clearance between intake valve stems and guides, there is a tendency to draw oil vapor through the guide on the suction stroke, causing excessive oil consumption, fouled spark plugs and poor low speed performance.

Valve stem-to-guide clearance may be checked with a dial indicator or a suitable plug gauge. Lacking either of these tools, take a new valve and place it in each valve guide and feel the clearance by moving the valve stem back and forth. If this check indicates excessive clearance, it will be necessary to replace the valve guide.

If the clearance is not excessive when checking with a new valve but is excessive when checked with the old valve, the old valve stem is worn and a new valve must be installed.

Valve guides may be removed and installed with a suitable puller and installer made for the purpose. If such equipment is not available, the old guides can be driven out or they can be pulled out by using a piece of pipe together with a long bolt and suitable washers.

After the new guides have been installed, they should be reamed to round out the holes and to provide adequate operating clearances.

VALVE LIFTERS

All Engines

On some engines, valve lifters are of the barrel type, operating in guide holes bored in the cylinder block. To remove lifters of this type, take off the engine side cover and take out the lifters.

Other engines have valve lifters which operate in removable guide clusters bolted to the cylinder block. To remove lifters of this type, merely unbolt the guide clusters from the block and take out the assembly.

Another design is where the lifters operate in bushings pressed in the block. These bushings may be pressed out after the lifters have been removed. After pressing in the new bushings, they should be reamed to provide the proper operating clearance and to eliminate any distortion which may have occurred during the replacement operation.

TIMING GEARS

All Engines

If the timing gears are removed for any reason, the camshaft must be timed when the gears are replaced. Before removing gears, make sure the timing marks are legible. And when replaced, valve timing will be correct if the marks on the camshaft and crankshaft gears are meshed.

CAMSHAFT & BEARINGS

All Engines

Camshaft bearings should be installed in sets and care must be exercised to see that the oil holes in the bearings are aligned with the oil feed holes in the block to assure adequate lubrication.

To assure proper camshaft fit on engines with crankcase separate from the cylinder block, line-ream camshaft bearings after the block is bolted in place.

PISTONS & RODS, REMOVE

After removing the cylinder head and oil pan, examine the cylinder bores above the ring travel area. If the bores are worn so that a shoulder or ridge exists at this point, remove the ridge with a ridge reamer to avoid damaging rings or cracking ring lands of pistons during removal.

Before removing pistons, mark the pistons with a file on the inside of the skirt to indicate the bore from which each piston was removed and also its position in the bore with relation to the camshaft side of the engine. Connecting rods should also be suitably marked if they are not marked already.

Remove the connecting rod caps and push the assemblies out of the cylinders, using care to prevent rod bolts from nicking crankshaft journals. It is advisable to install caps on rods as they are removed to avoid mixing parts.

PISTONS & RODS, ASSEMBLE

All Engines

If the pistons and rods have factory markings to indicate their position in the cylinders, assemble and install them according to these marks, or according to the marks made during removal if they were not otherwise marked.

PISTONS, REPLACE

All Engines

Before a honing or boring operation is started, measure all new pistons with a micrometer at points 90° away from the piston pin. Then select the smallest piston for the first fitting. The slight variations usually found between pistons in a set may provide for correction in case the first piston is fitted too free.

PISTON RINGS, REPLACE

All Engines

When new rings are to be installed without reboring cylinders, the glazed cylinder walls should be slightly dulled but without increasing the diameter of the bore. This is done with a "Glazebuster" or a hone equipped with the finest grade of stones.

New rings must be checked for clearance in piston grooves and for gap in cylinder bores. The latter operation must be measured with the ring about two inches from the bottom of the cylinder bore to which it is be fitted. Cylinder bores and piston grooves must be clean, dry and free from carbon and burrs.

Check the clearance of each ring in its piston groove by installing the ring and then inserting feeler gauges *under* the ring. Any wear that occurs in the piston groove forms a step or ridge at the inner portion of the lower land. If gauges are inserted above the ring, the ring may rest on the step instead of on the worn portion of the lower land and a false measurement of clearance will result.

If the piston grooves have worn to the extent that relatively high steps or ridges exist on the lower lands, the piston should be replaced because the steps will interfere with the operation of the new rings and ring clearances will be excessive. Piston rings are not furnished in oversize widths to compensate for ring groove wear.

PISTON PINS, REPLACE

All Engines

In some engines, the pins are clamped in the rod, and when installing pins of this type, turn the notch in the pin to line up with the clamp screw hole in the rod to prevent damage to the clamp screw threads as it is being installed.

In other engines, the pins are of the floating type, being free to rotate in both the rod and piston bosses. These pins are prevented from rubbing against the cylinder wall by either snap rings which fit in grooves in the piston bosses, or by aluminum plugs pressed in the ends of the pins.

Pins should be selected that can be installed by pushing with the palm of the hand with piston at normal room temperature. To make assembly easier, however, heat the piston in boiling water for a few minutes to obtain maximum expansion of the metal and quickly insert the pin.

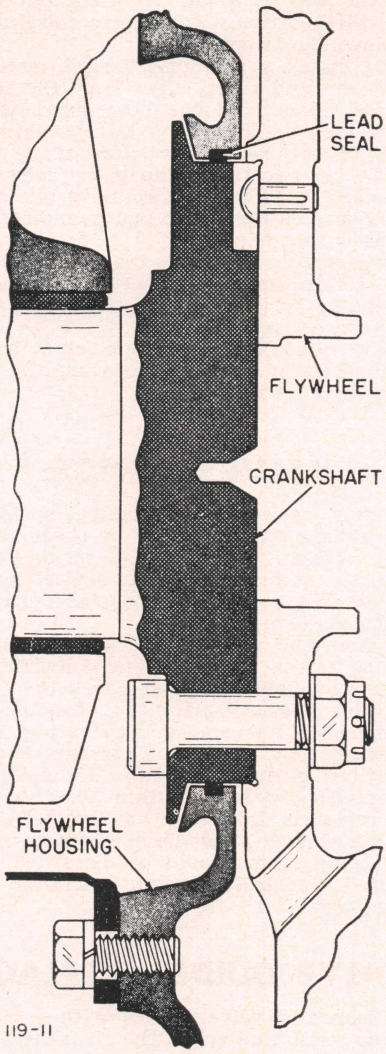

Fig. 4 Crankshaft rear oil seal. All Engines

ROD BEARINGS, REPLACE

All Engines

Rod bearings consist of two half shells. When the bearings are placed in the rod and cap the ends extend slightly beyond the parting faces so that when the rod bolts are tightened, the bearings will be clamped tightly in place to insure positive seating and prevent turning. *The ends of these bearings should never be filed flush with the parting surface of the rod and cap for the above reasons.*

Service bearings are provided in standard sizes and several undersizes, including undersizes for reground crankshafts.

After installing new bearings, the oil clearance may be checked with Plastigage which is readily available at any auto parts jobber. Full instructions for its use are furnished with the envelope in which it is contained.

MAIN BEARINGS, REPLACE

All Engines

Main bearings are of the insert type, requiring no reaming or scraping. They may be removed and replaced without removing the crankshaft.

Plastigage may be used to check bearing clearance and instructions for its use are contained in the package.

CRANKSHAFT END PLAY, ADJUST

All Engines

Through normal wear, crankshaft end play will seldom become excessive but whenever new bearings are fitted check the end play carefully and correct as required.

End thrust is controlled by thrust washers at the center main bearing. If end play is excessive, install new washers.

CRANKSHAFT OIL SEAL

All Engines

An oil slinger, integral with the crankshaft, behind the rear main bearing, and a lead seal inserted in the flywheel housing at the rear of the slinger, Fig. 4, prevents oil leaking at this point.

OIL PUMP REPAIRS

All Engines

Conventional gear type oil pumps, located in the crankcase, are used on all engines. After removing the oil pan, the pump may be unfastened from its mounting and disassembled for repairs.

Inspect the pump gears for nicks or burrs. Inspect the bottom cover for wear and dress it down on a surface plate with emery if necessary. Place the cover on the pump and check the drive shaft end play. If end play is in excess of .006", replace the drive and idler gears.

WATER PUMP REPAIRS

All Engines

The water pumps used on these engines are of the ball bearing type with sealing accomplished by a non-adjustable spring-loaded seal, Figs. 5 and 6. In servicing these pumps, note carefully the arrange-

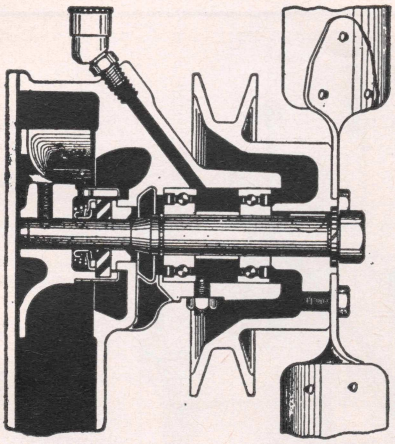

Fig. 5 Typical sealed type ball bearing water pump on engines using one fan belt

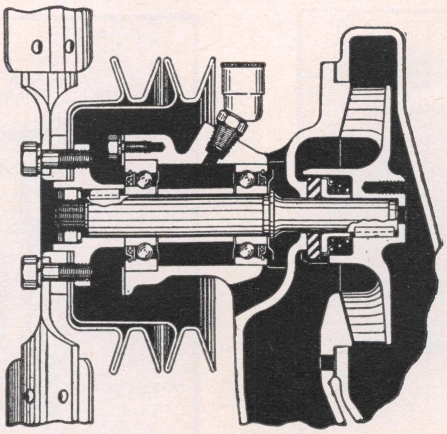

Fig. 6 Typical sealed type ball bearing pump on engines using dual fan belts

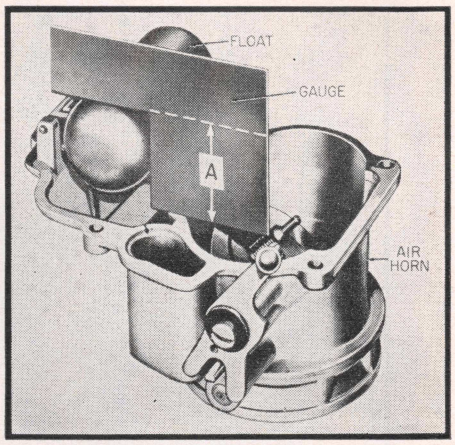

Fig. 9 Gauging float level. Holley carburetors

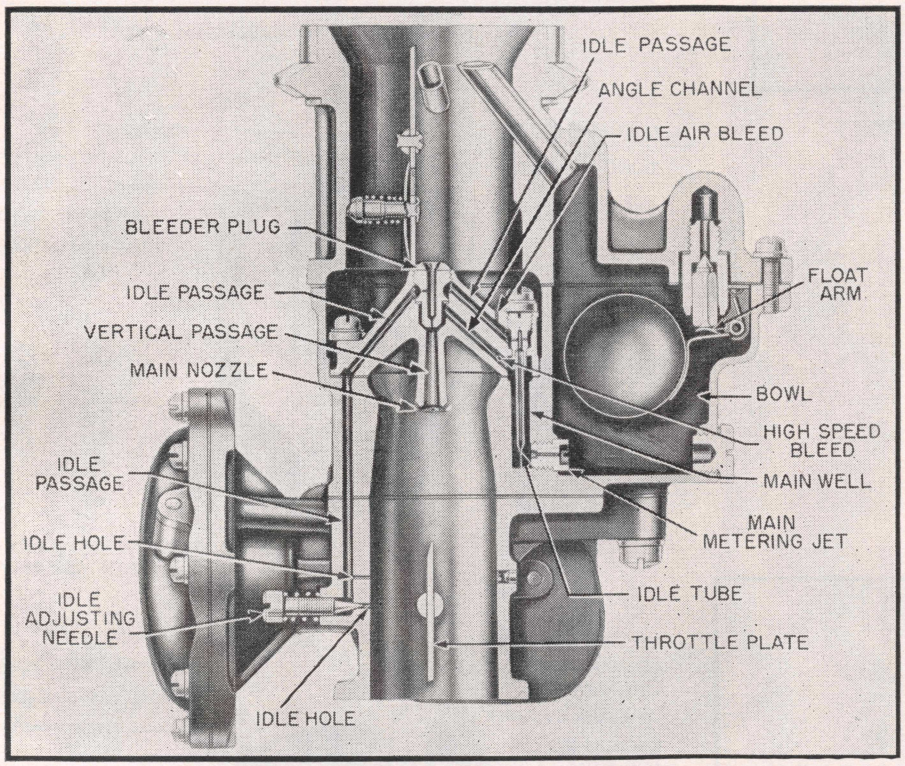

Fig. 7 Holley AA-1G carburetor

ment of the seal parts as they are removed so that the new seal may be assembled correctly.

IGNITION TIMING

All Engines

If a timing light is to be used to set ignition timing, disconnect the vacuum advance pipe to the carburetor and place a piece of tape over open end of pipe. *This is important as carburetor trouble can affect timing adjustments.*

Lacking a power timing light, an accurate method of setting ignition timing with the engine stopped is with the aid of a jumper light. Be sure to use a light bulb that corresponds with the system voltage of the vehicle.

1. Remove distributor cap and rotor and see that the breaker gap is set according to specifications.
2. Rotate engine until No. 1 cylinder is at the ignition timing point as indicated by the timing pointer and timing mark being lined up with each other.
3. Connect the jumper light between distributor ignition terminal and ground.
4. Turn on ignition switch.
5. Loosen distributor and turn it in the direction of normal rotation until the points just close (light out). Then slowly turn distributor in the opposite direction just to the exact point that the light goes on. Tighten distributor in this position.

HOLLEY CARBURETORS

AA-1G & 885-JJS

These carburetors, Figs. 7 and 8, are dual downdraft units incorporating an integral governor. The governor throttle mechanism is part of the carburetor and has been designed to provide the needed power required for moving the throttle to governing speeds as controlled by a separately driven governor rotor. The combination of these two units give instant response and accurate governing.

Fuel & Float Level

When checking the fuel level in an open vessel, under 3 lbs. pump pressure the level should measure $\frac{19}{32}$" on AA-1G models and $\frac{5}{8}$" on 885-JJS units. The measurement is taken below the surface of the float chamber cover (gasket in place) to the level of the fuel. The

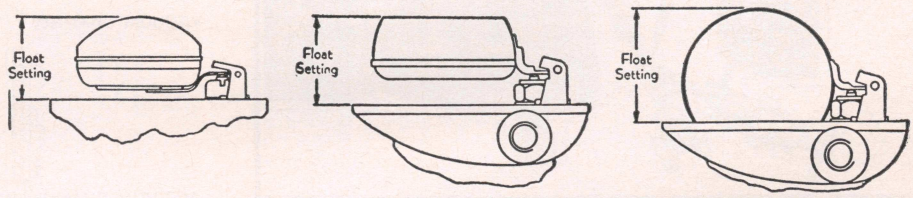

Fig. 11 Zenith carburetor float settings

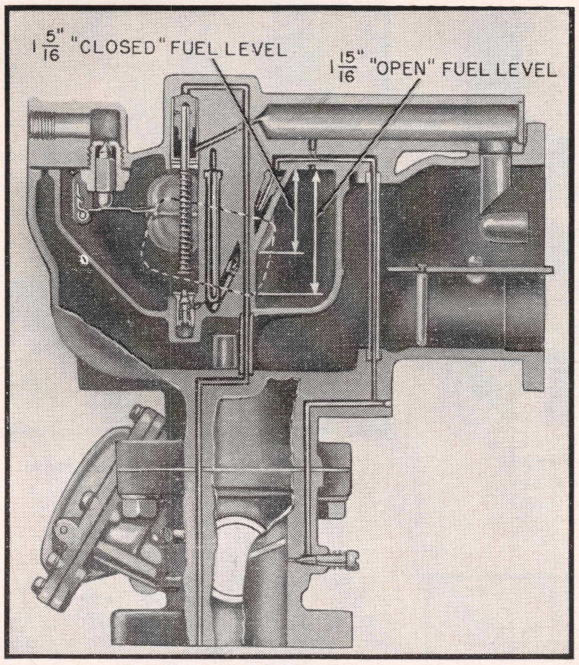

Fig. 8 Holley 885-JJS carburetor

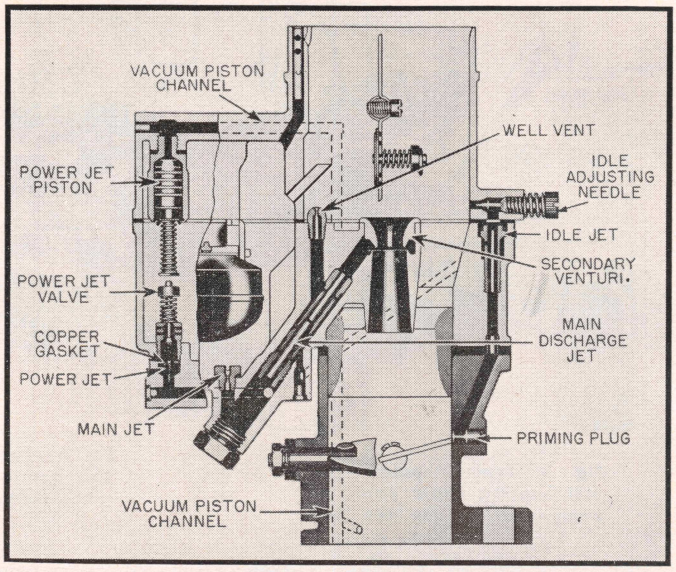

Fig. 10 Zenith 28 Series carburetor

level may be corrected by bending the float arm.

The float level can be set when the air horn is off by gauging the distance between the bottom of the float and the flange surface of the air horn, Fig. 9. Holding the air horn upside down and the float in the closed position, measure the distance from the flange surface of the air horn to what would normally be the bottom side of the float (not the soldered seam). The correct distance should measure 1¼" on AA-1G and 1⅜" on 885-JJS. Bend the float lever arm as required to correct the float level.

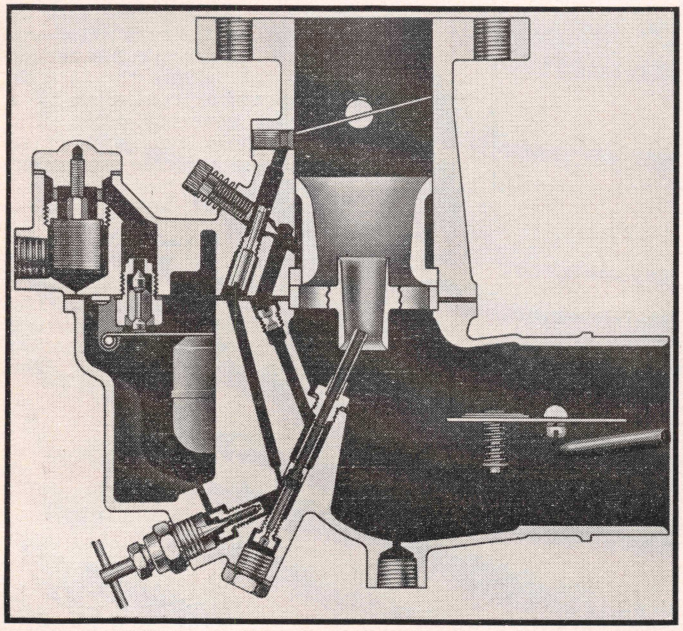

Fig. 13 Zenith 63 Series carburetor

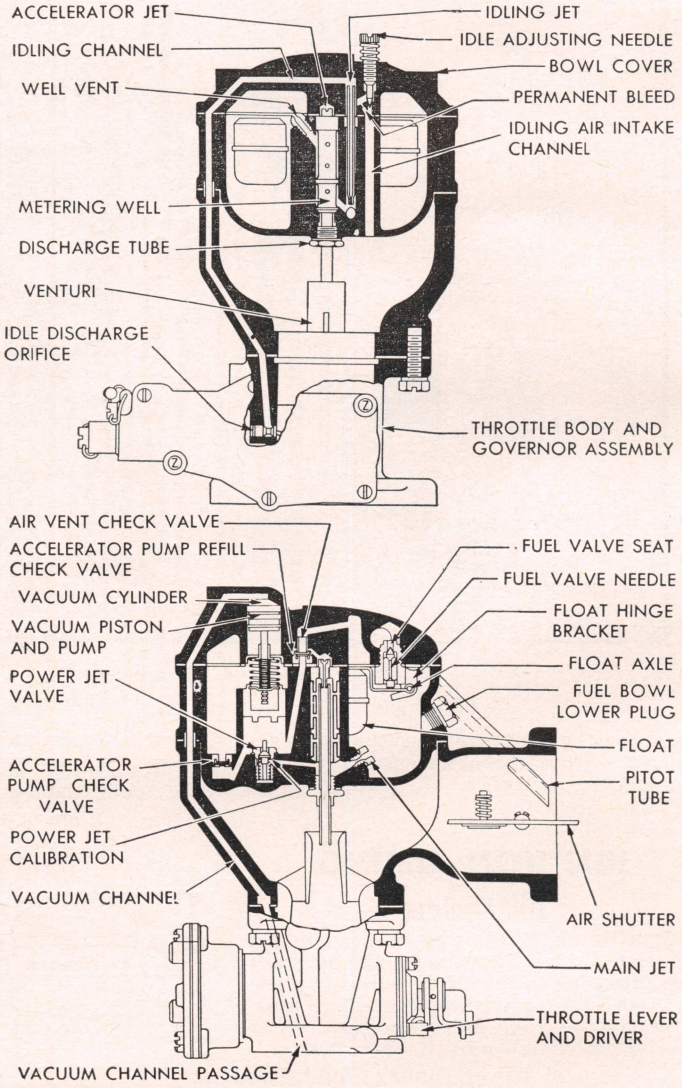

Fig. 12 Zenith 29 Series carburetor

Idle Mixture

The idle mixture is controlled by the idle adjustment needles. Turning these needles in makes a leaner mixture and turning them out makes the mixture richer. Turn the needles in until they just touch the seats and back off one full turn.

When the engine has warmed up to operating temperature, alter the adjustment as required to obtain smooth performance. The range should be between 1 and 1½ turns.

Accelerating Pump

The quantity of the fuel discharged by the accelerating pump can be controlled by changing the position of the pump link in the throttle lever. Of the three different positions (marked 1, 2 and 3) number 2 is the average setting, number 1 is for summer and 3 is for winter operation.

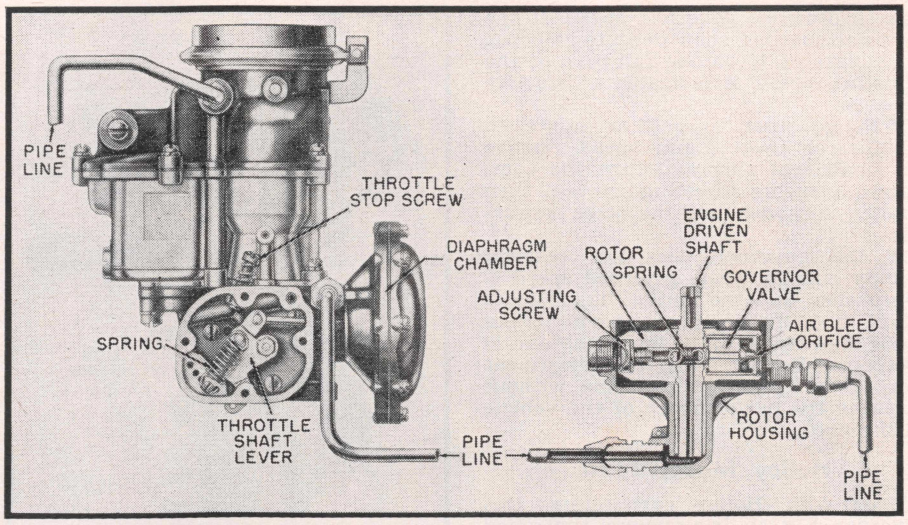

Fig. 15 Holley carburetor governor. Model 1174

ZENITH CARBURETORS

28ADA10

This carburetor, Fig. 10, is a downdraft, single-barrel unit with a mechanically-operated accelerating pump and a manifold vacuum controlled power jet system.

Float Setting

Float height setting is measured from the gasket surface or parting line of the float chamber cover to the bottom of the float at the center, Fig. 11, with the fuel inlet valve seated (holding float chamber cover upside down). This distance should measure 1½".

Under three pounds fuel pump pressure the fuel level should measure $\frac{25}{32}$".

Idle Mixture

For a preliminary adjustment, turn the idle adjusting needle into its seat and open one full turn. Run the engine until it reaches normal operating temperature and alter the adjustment as required to obtain smooth performance. The range should be between 1 and 1½ turns open.

Accelerator Pump

The accelerating jet and the pump spring control the rate of acceleration discharge. The stroke of the pump is controlled by the position of the pump rod in relation to the pump piston rod. The stroke can be varied by changing the position of the hairpin clip on the pump piston rod. The upper groove allows a half stroke. The center groove allows an intermediate or ¾ stroke and the lower groove allows maximum or full stroke.

29D13 & 14

This carburetor, Fig. 12, is a downdraft carburetor with a concentric float bowl. This design assists in the proper metering of the air and fuel to the engine without flooding when the vehicle is operated at extreme angles. The fuel chamber can be tipped at an angle to any position within a circle up to 45°. This feature is very helpful when the vehicle is operated in hilly country, in and out of excavations, on ramps, or when operated at side angles.

Float Setting

With the cover and float assembly held upside down and fuel inlet needle held closed, the distance indicated in Fig. 11 should be $1\frac{41}{64}$".

Idle Mixture

For a preliminary adjustment, turn the needle into its seat and open one full turn. Run the engine until it reaches normal operating temperature and alter the adjustment as required to obtain smooth performance. The range should be 1 to 1½ turns open.

Zenith 63 Series

Zenith 63AW-12, 63AW-14 and 63AW-16 models are used on these engines, Fig. 13. They are single barrel, updraft carburetors with a manifold vacuum-controlled power and accelerating system. A removable venturi tube measures the volume of air which passes through the carburetor.

Float Setting

Float height setting is measured from the gasket surface or parting line of the float chamber cover to the bottom of the float at the center, Fig. 11, with the fuel inlet valve seated (holding float chamber cover upside down). This distance should measure $1\frac{19}{32}$" on 63AW-12 carburetors and $2\frac{1}{64}$" for 63AW-14 and 63AW-16 units.

Under three pounds fuel pump pressure the fuel level should measure $\frac{55}{64}$" on 63AW-12 units and $1\frac{3}{64}$" on 63AW-14 and 63AW-16 carbuertors.

Idle Mixture

For a preliminary adjustment, turn the needle into its seat and open one full turn. Run the engine until it reaches normal operating temperature and alter the adjustment as required to obtain smooth performance. The range should be between 1 and 1½" turns open.

Accelerator Pump

This adjustment is provided in the form of three grooves on the pump piston rod. The carburetor must be opened up and the vacuum pump piston assembly removed. Compress the spring toward the vacuum piston to permit moving the pump rod to the outer end of the slot in the pump piston base. At this point the slot is wide enough to permit removal of the rod.

There are three grooves near the end of the pump rod providing for three lengths of pump stroke. Install the pump piston in the groove nearest the end of the rod to obtain minimum or a half stroke; in the center groove for intermediate stroke, and in the third groove for maximum stroke. The spring holds the rod in the center of the pump piston base.

CARBURETOR GOVERNOR

Zenith

To change the governed speed, remove the seal wire and large seal plug, Fig. 14. Turn the main adjusting screw clockwise to increase or counter-clock-

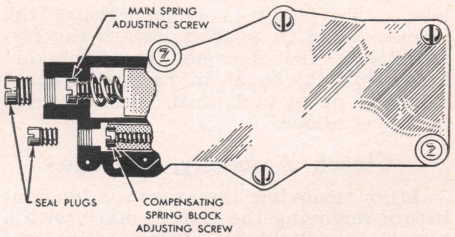

Fig. 14 Zenith carburetor governor adjustments

wise to decrease governed speed. If the governor does not show definite response to changes of ¼ to one full turn of the adjusting screw, it indicates a defective governor.

If the governor "surges" or "hunts" to a higher or lower engine speed, remove the small seal plug and turn the compensating spring adjusting screw ¼ turn counter-clockwise until the surge is overcome.

If the governor does not respond quickly enough when governed speed is approached and the action "lags" or is "flat", turn the compensating adjusting screw clockwise until the symptom is overcome. Do not turn the adjustment more than ½ turn at a time without checking the performance of the vehicle on the road.

Holley Model 1174

Used with Holley carburetors, this governor, Fig. 15, is a vacuum controlled device featuring all the advantages of a mechanical governor without lengthy and complicated linkage. Should it become necessary to make any changes, proceed as follows:

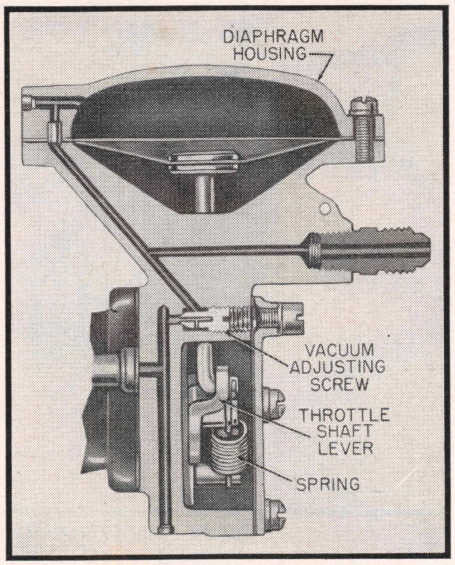

Fig. 16 Vacuum screw adjustment. Holley 1174 governor

To adjust the governor cut-off speed, remove the seal from the screw on the side of the governor housing and remove the screw. Rotate the engine until the end of the governor rotor, which carries the adjusting screw, is in line with the hole from which the screw was removed. Turn the adjusting screw clockwise to increase or counter-clockwise to decrease governed speed.

Whenever the governor has been disassembled and serviced, after reassembling turn the adjusting screw clockwise until it stops, then turn it counter-clockwise three full turns. Final adjustment is then made after the governor has been assembled to the engine.

The vacuum adjusting screw, Fig. 16, regulates the rpm spread between the governor full load cut-off speed and the no-load engine speed. Turning the screw clockwise will decrease the rpm spread. Turning it counter-clockwise will increase the spread. Changing the position of the screw will change the average governor speed and this should be corrected by the rotor adjusting screw.

Clutch Section

BORG & BECK

These clutches, Fig. 1, are single plate, dry disc types with no internal provision for adjustment for wear. However, each release lever is adjusted individually to the correct height, and no attempt should be made to adjust these levers unless the clutch is to be dismantled for overhaul. Overhauling the clutch should not be attempted unless a clutch rebuilder is available. Lacking this equipment it is recommended that the clutch cover and pressure plate assembly be exchanged for a rebuilt unit.

Clutch Pedal, Adjust

The general procedure for adjusting the clutch pedal is to shift the pedal down away from the toe board until the clearance or free movement is 1 to 1½". The pedal pad should come in contact with the toe board when the pedal is pressed down. If it does not move that far, making it necessary to spring the pedal to make the pad touch the toe board, shift the pedal down a little more.

Press the pedal down and note the distance the release bearing travels after it comes in contact with the release levers. To obtain a clean release the levers should be pushed toward the flywheel $\frac{7}{16}$". If it does not travel this distance shift the pedal up, bearing in mind that the pedal pad must touch the toe board as above.

Clutch Assembly, Replace

After removing the transmission, but before removing the clutch, mark with a punch the flywheel, clutch cover and pressure plate so that these parts may be assembled in their same relative positions and in the same position on the flywheel if the same clutch is to be reinstalled. This is important because they are balanced as an assembly.

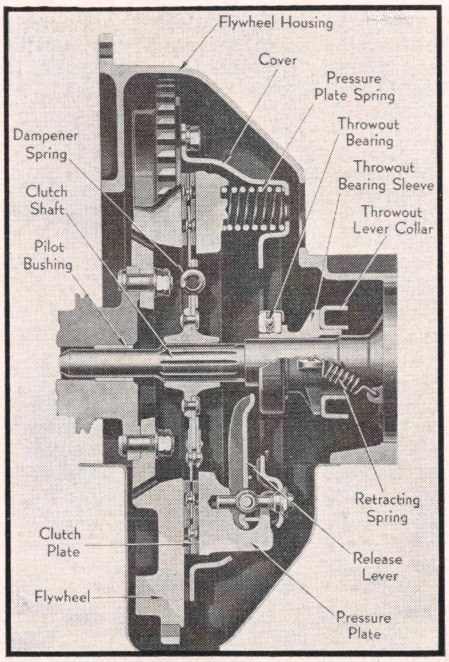

Fig. 1 Typical Borg and Beck clutch

To remove the clutch, pull out the clutch release bearing and sleeve. Unfasten the clutch cover from the flywheel, loosening each cap screw a few turns in succession until the cover is free. The clutch assembly and driven disc can then be removed from the flywheel.

When installing the clutch, coat the pilot bearing in the end of the crankshaft with wheel bearing grease. Clean the surfaces of the flywheel and pressure plate, making certain no oil or grease remains on these parts. Hold the cover plate and disc in place and insert a special clutch aligning tool or a spare clutch shaft through the hub of the disc and into the pilot bearing in the crankshaft. Bolt the clutch cover loosely to the flywheel, being sure the punch marks previously made are lined up. To avoid distortion of the clutch cover, tighten the cover bolts a few turns each in progression until all are tight. Guide the transmission into place, using care to see that the driven disc is not bent. Use a floor jack to support the transmission so that the clutch shaft may be guided through the driven disc safely. Adjust the clutch pedal free travel.

ROCKFORD TYPE TT

This type clutch, Fig. 2, is of the single plate dry disc type, consisting of a pressure plate and cover assembly having 12 or 15 release springs, three release levers and a spring-cushioned driven disc mounted on a splined hub. There is no internal provision for adjusting the clutch but each release lever is adjusted individually to the correct height. No attempt should be made to adjust these levers unless the clutch is to be dismantled for overhaul. Overhauling the clutch should not be attempted unless a clutch rebuilder is available. Lacking this equipment it is recommended that

the clutch cover and pressure plate assembly be exchanged for a rebuilt unit.

Clutch Assembly, Replace

Before removing the clutch from the flywheel, punch mark the flywheel, clutch cover and pressure plate so that these parts may be assembled in their same relative positions and in the same position on the flywheel if the same clutch is to be reinstalled. This is important because they are balanced as an assembly.

After removing the transmission, pull out the clutch release bearing and sleeve. Unfasten the clutch cover from the flywheel, loosening each cap screw a few turns in succession until the cover is free. The clutch and driven disc can then be removed from the flywheel.

When installing the clutch, coat the pilot bearing in the end of the crankshaft with wheel bearing grease. Clean the surfaces of the flywheel and pressure plate, making certain no oil or grease remains on these parts. Hold the cover plate and disc in place and insert a special clutch aligning tool or a spare clutch shaft through the hub of the disc and into the pilot bearing in the crankshaft. Bolt the clutch cover loosely to the flywheel, being sure the punch marks previously made are lined up. To avoid distortion of the clutch cover, tighten the cover bolts a few turns in progression until all are tight. Guide the transmission into place, using care to see that the driven disc is not bent. Use a floor jack to support the transmission so that the clutch shaft may be guided through the driven disc safely.

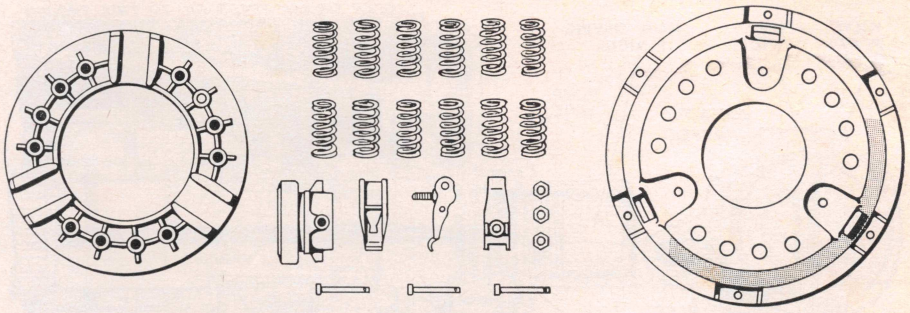

Fig. 2 Rockford Model TT clutch

Transmission Section

For Fuller and Spicer transmissions used on Mack trucks, see the "name" transmission chapters for service procedures

TRANSMISSIONS

Mack Unit No. ①	Oil, Pints
TR-130	33
TR-671	15
TRD-67, 670	20
TRDX-670	19
TRD-675, 6750	24
TR-72, 720	22
TRD-72, 720	28
TRDX-720	28
TRD-725, 7250	30
TRT-72	30
TRQ-72, 720	36
TR-73 ②	12
TR-771	11
TR-77	13
TRDX-770	14
TRD-775	15
TRQ-77	17
B/L-6231 ③	8
B/L-7231 ③	8
B/L-8031 ③	12
B/L-8035 ③	12

①—See name plate on transmission housing for model identification.

②—Fuller transmission.

③—Spicer transmission.

GENERAL DATA

Transmission Oil Pump

All Mack-made transmissions employ constant mesh helical gears which run free on the mainshafts and are brought into selective engagement by means of sliding gear-type clutches. These free-running or floating gears run on thin-shell bushings to maintain gear alignment with greater precision. However, because bushings require more positive provision for lubrication, pressure lubrication of these floating gears is provided by a built-in pump in all Mack-made transmissions except the small capacity TR-77 Series which is lubricated by gear throw-off and gear pumping action.

Pressure lubrication of these bushings is provided by oil delivered through rifle-drilled passages in the mainshafts and supplied by a simple eccentric shuttle-type pump built in the main drive pinion, Fig. 1. This pump has but one moving part—a double-ended reciprocating vane which dispenses with valves. Calculated leakage past the bronze nipple acting as a jumper tube, which conducts oil from the pump to the drilled mainshafts, supplies copious lubrication to the spigot bearings. Gravity feed oil reaches the reverse cluster gear bearings through a rifle-drilled connecting hole in the supporting shaft.

All working and sliding parts of Mack-made transmissions are bathed in oil from gear throw-off when the engine is running; the countershaft being partially submerged in lubricant. To supply the pump, part of this gear throw-off is collected by a gutter high on the right-hand side of the case. Through a drilled connecting passage in the case, this oil is led to the eccentric space between the driving pinion shaft and its bearing cover. As the shaft turns, the pump vane reciprocates in its eccentric orbit and the vane ends pick up the oil and force it into the center passage through the bronze nipple to the mainshaft drillings.

Magnetic Cleaner Plug

Of course, clean oil in a transmission is essential to long life of gears and bearings. Minute particles of steel, dislodged as a result of wear, form an abrasive of great destructiveness and tend to circulate with the oil. This greatly increases the wear on gear teeth and bearings unless means are provided to separate them from the oil. To combat this, all Mack-made transmissions are provided with a magnetic oil cleaner plug. As viewed from the rear of the transmission, Fig. 2, the oil cleaner is located high inside the transmission case on the right-hand side above the level of the oil. It is so situated that it receives the throw-off from the upper gears. The cleaner consists of an integral open trough and slanting baffle with a removable sheet metal cover, Fig. 3. At the bottom of the slanting baffle, a tapped hole in the case accommodates a large hex plug with a powerful built-in magnet installed from outside, Fig. 2.

It is not necessary to drain the case in order to remove the plug for cleaning or for removing sludge from the bottom of the trough. The oil cleaner plug may be removed at any time without losing any oil or disturbing other parts of the transmission. When removed, it carries all foreign matter with it which is easily removed from the magnet simply by

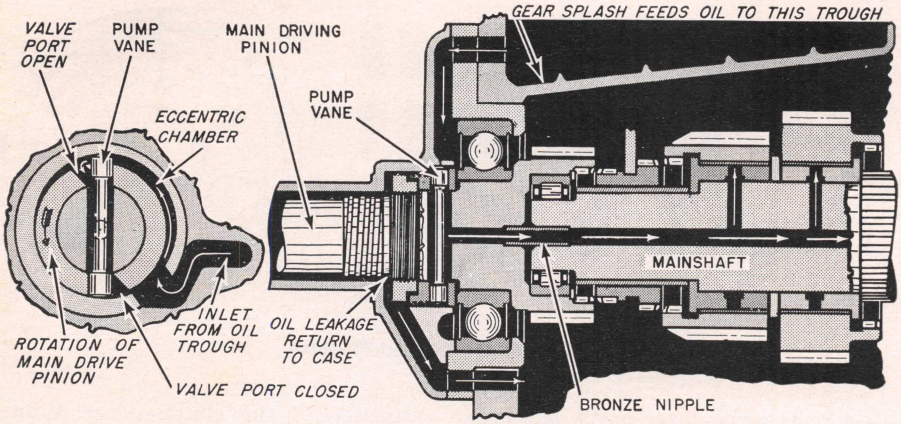

Fig. 1 Sectional view of typical Mack transmission oil pump and mainshaft drillings

wiping it clean. Remove sludge from the sump and then replace the plug in the case.

In the TR-51 and 13 Series of large Mack transmissions, magnetic drain plugs are also employed in addition to the magnetic cleaner plug to aid in extracting any magnetizeable particles from the lubricating oil.

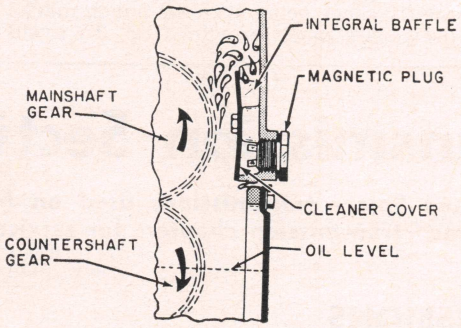

Fig. 2 Section through rear of transmission showing magnetic cleaner plug

MACK 20 SPEED TRQ-72, 720

Disassembly, Figs. 4 and 5

Unless a complete overhaul is necessary, remove only those parts required to gain access to the faulty parts. Do not disturb parts having press fits unless replacement is necessary. In that case, use proper press setups and pullers so that usable parts are not damaged. After cleaning all transmission parts with suitable solvent, inspect each part thoroughly. Replace worn or damaged parts, staked nuts, gaskets and cotter pins to avoid subsequent transmission failures.

1. After removing transmission from vehicle and cleaning externally, mount unit in a suitable overhaul stand. Remove hand brake parts, clutch release bearing assembly with return spring, clutch release shaft and yoke, P.T.O. covers and gear shifter hand control levers.
2. Remove both case covers and lay aside for bench disassembly. Engage sliding gear and ALL sliding clutches so that the entire gearset is locked up. Remove cotter pin from drive flange nut and then remove nut. Install standard puller and remove drive flange. Remove both rear bearing covers and save countershaft rear bearing shim pack intact. Slide speedometer gear off of mainshaft.
3. Remove all case-to-case dowel bolts and capscrews. With a large enough nylon headed mallet, tap compound case and separate it and the enclosed parts from the main case. Lay enclosed parts aside.
4. Remove mainshaft rear bearing retainer capscrews, oil tube, countershaft rear bearing cone clamp plate and capscrews. Remove countershaft front bearing cover capscrews and use jackscrews to remove the cover. Remove main driving pinion cover capscrews and cover. Carefully remove oil pump vane from pinion and save. To remove pinion, tap on gear end of pinion with a nylon mallet and work assembly out of case. Lay pinion aside.
5. Remove mainshaft spigot bearing inner race retaining snap ring. With 4th and 5th speed sliding clutch against bearing inner race, tap on clutch with nylon mallet and remove both parts from mainshaft. Pry key out of mainshaft spline. With a small tool, rotate 4th speed gear thrust washer one spline tooth and slide washer off of mainshaft.
6. Butt a soft drift against forward end of mainshaft and with a hammer, drive mainshaft rearward to separate rear bearing from case.
7. Carefully slide gears, sleeve, thrust washer, fixed and sliding clutches from mainshaft while withdrawing mainshaft from rear of main case. Remove sleeve Woodruff key from mainshaft. Place mainshaft in a vise with soft jaws and pry retaining ring off of mainshaft rear bearing 2-piece thrust washer. Pry 2-piece thrust washer out of groove in mainshaft. Turn mainshaft over and remove oil tube, retaining snap ring and compound mainshaft spigot bearing. Remove from vise and press mainshaft out of rear bearing retainer and front cone. Remove bearing cone spacer shims and save. Remove remaining bearing cone with a segmented-type puller.
8. Remove reverse gear shaft lock and with puller 17-T-1425, withdraw gear shaft from case. Remove cluster gear, bearings and bearing spacer from case.
9. Slide countershaft rearward and partially through rear bearing opening. Install segmented puller on rear bearing cones and remove. With a soft steel drift, remove rear bearing cup from main case. When using a drift, be very careful not to damage part or case and apply alternate equal blows to opposite sides to prevent cocking of part in the case.
10. Tilt forward end of countershaft upward and remove entire assembly from case. Remove countershaft front bearing inner race and gear snap ring. For shops having a small capacity hydraulic press, press off one countershaft gear at a time. For shops having a large capacity hydraulic press, place countershaft assembly in press, slide length of heavy tubing over countershaft integral gears to engage 3rd speed gear and remove all gears in one operation.
11. Clamp gear end of main driving pinion securely in large bench vise with soft jaws. Unstake pinion bearing

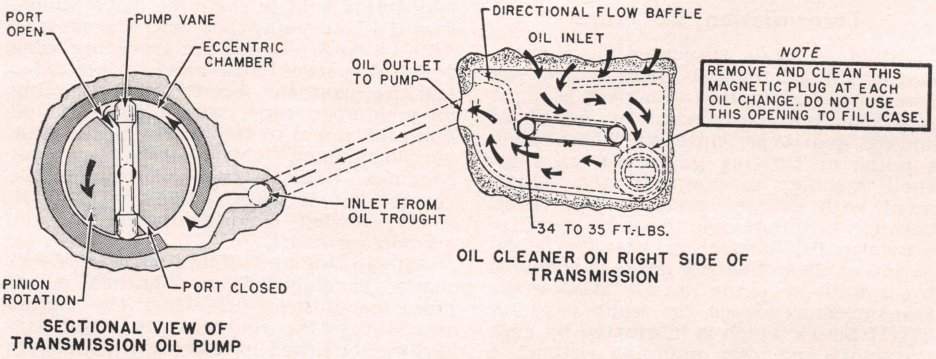

Fig. 3 Showing oil pump and oil cleaner

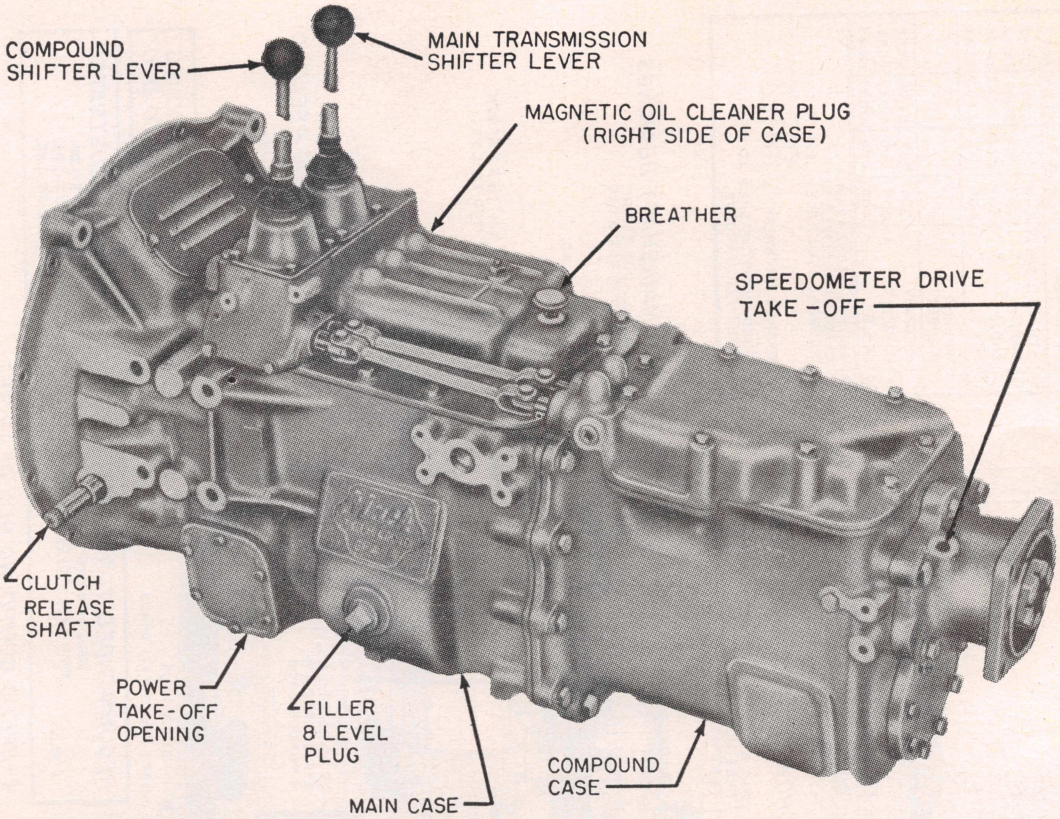

Fig. 4 Mack 20 speed TRQ-720 transmission

nut and with a wrench, remove left-hand threaded nut. Remove ball bearing by pressing or tapping off. Turn pinion over and remove retaining snap ring and spigot bearing. Remove oil tube carefully and save.

12. Position compound case on arbor press table and press mainshaft out of case-mounted rear bearing retainer and cone. Carefully remove and save cone spacer and shims. Turn case over and remove compound mainshaft rear bearing retainer and compound countershaft rear bearing cup.
13. Press compound mainshaft out of LO-split gear, fixed clutch, LO-LO split gear, gear sleeve and rear bearing front cone. Turn shaft over and clamp in vise with soft jaws. Remove spigot bearing inner race from spigot, unstake nut and remove. Nut has left-hand threads. Slide fixed clutch, sliding clutch and HI-split gear off of shaft. Remove shaft from vise.
14. Remove bearing cup from compound countershaft constant-mesh gear. With segmented puller, remove rear bearing cone. Remove gears in hydraulic press one at a time or all in one operation, depending on capacity of press. Remove gear key from shaft.
15. Clamp flange of main case cover in bench vise and remove shifter and fork setscrews. Remove Welch plugs at shifter ends with shifter rails. Withdraw shifter rails from main case cover and at the same time remove shifters and shifter forks. *CAUTION: The spring-loaded balls over the shifter rails will fly out with CONSIDERABLE FORCE when released by withdrawing the rails. Therefore, it is advisable to hold a clean shop wiper over the holes while withdrawing the rails.* Be sure to save the balls, spring, and rail interlock pins for use at reassembly. Remove breather and toggle levers from top of cover.
16. Disassemble compound case cover in same manner. *Watch out for spring-loaded balls over rails when withdrawing rails from case!*

Inspection and Repair

1. Wash and clean all parts thoroughly in clean solvent and dry with moisture-free compressed air. Do not spin bearings with compressed air as damage to the bearing may result.
2. Replace bearings which are pitted and/or spalled. Replace lubricated bearings having excessive axial or radial clearances. Replace cases if outer races of bearings turn freely in case bores.
3. Replace gears having pitted or badly worn teeth. Replace gears with damaged internal or external teeth as a result of gear clashing. Floating gears having excessive radial clearance should be rebushed and bored to size.
4. Check all splines. If excessive wear is obvious, replace part or parts. Check thrust washers for scored surfaces or reduced thickness from excessive wear. Replace if either or both conditions prevail.
5. Check all gray iron parts for cracks and breaks. Case castings may be welded or brazed provided cracks do not extend into bearing bores or bolting surfaces. Replace or repair parts found to be damaged.
6. Check all other parts for wear and damage. Replace all parts that cannot be repaired or straightened. Replace all gaskets, damaged oil seals, O-rings, staked nuts and any part that shows mutilation. Replace poppet springs that have lost their tension. Clean up any threads that show mutilation.

Reassembly

NOTE: All working parts, especially the bearings, should be generously coated with SAE-30 oil while the transmission is being assembled. This will assure immediate lubrication when first starting and will prevent seizing of these parts. As moving parts are assembled, check frequently to see that they move freely.

1. Insert gear key in countershaft and press gears on one at a time. These gears have an interference fit and can be pressed on cold but for best results, the gears should be shrunk-fitted on shaft. With a heat lamp or hot oil, heat gears 270° to 300° F. for a period of not more than ½ hour. Oil shaft for each gear. Install gear snap ring, install front

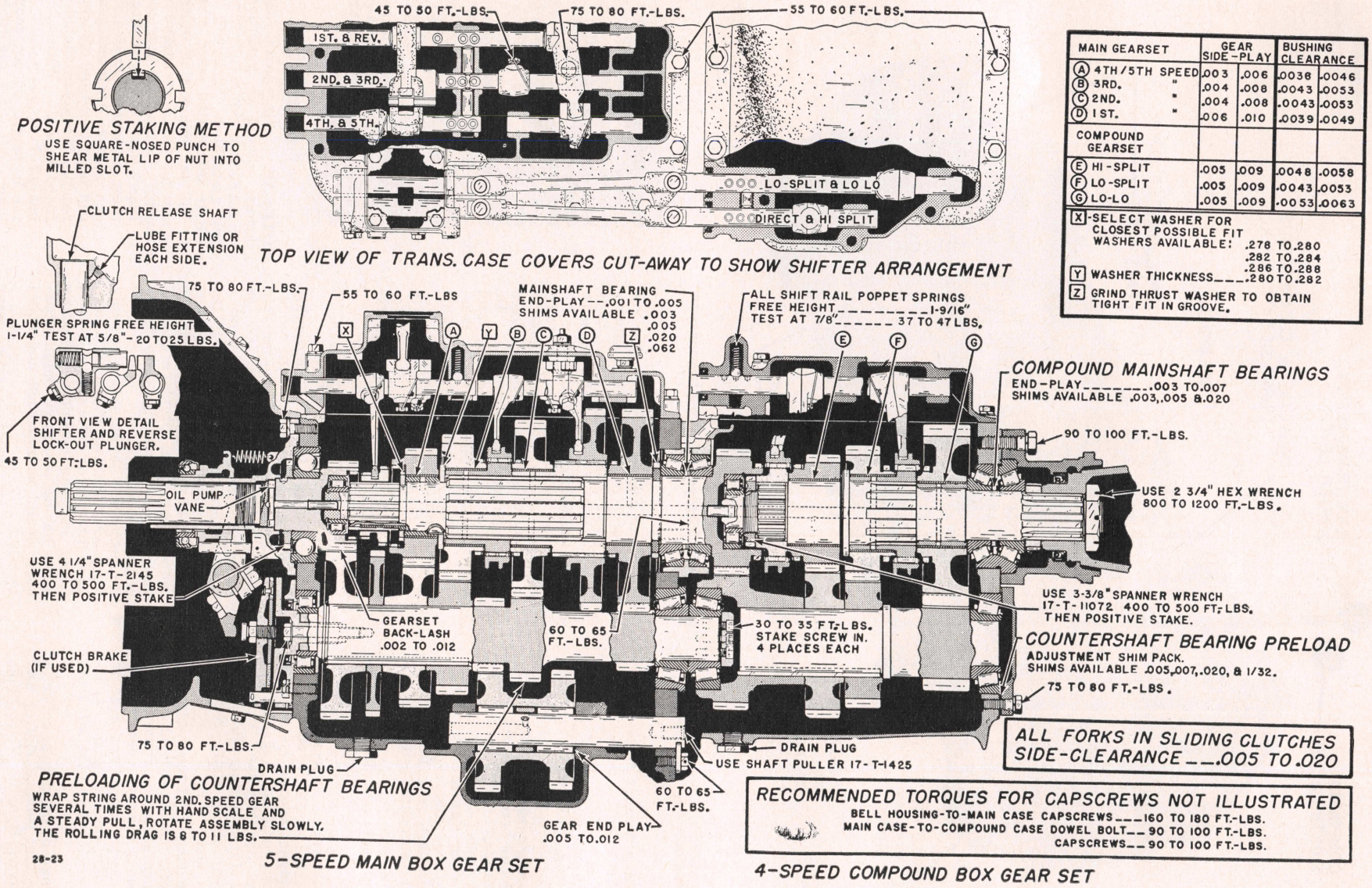

MAIN GEARSET	GEAR SIDE-PLAY		BUSHING CLEARANCE	
(A) 4TH/5TH SPEED	.003	.006	.0038	.0046
(B) 3RD. "	.004	.008	.0043	.0053
(C) 2ND. "	.004	.008	.0043	.0053
(D) 1ST. "	.006	.010	.0039	.0049
COMPOUND GEARSET				
(E) HI-SPLIT	.005	.009	.0048	.0058
(F) LO-SPLIT	.005	.009	.0043	.0053
(G) LO-LO	.005	.009	.0053	.0063

(X)-SELECT WASHER FOR CLOSEST POSSIBLE FIT
WASHERS AVAILABLE: .278 TO.280
.282 TO.284
.286 TO.288
(Y) WASHER THICKNESS .280 TO.282
(Z) GRIND THRUST WASHER TO OBTAIN TIGHT FIT IN GROOVE.

Fig. 5 Mack 20 speed TRQ-72 transmission. Model TRQ-720 is the overdrive version

bearing inner race on spigot and retain with its snap ring.

2. Install countershaft front bearing in case. Install bearing cover and gasket. Place countershaft assembly in case with small end extending out of rear bearing opening. Install rear bearing cup in case. Install tapered roller bearing cones back-to-back on rear end of countershaft and secure with clamp plate. Position countershaft in front bearing.

3. Insert gear key in compound countershaft and press gears on one at a time. These gears have an interference fit and can be p essed on cold but for best results, the gears should be shrunk-fitted on shaft. With a heat lamp or hot oil, heat gears 270° to 300° F. for a period of not more than ½ hour. Oil shaft for each gear. Press bearing cup in front end of compound countershaft constant-mesh gear and bearing cone on rear end. Push countershaft rear bearing cup in compound case and install shim pack and bearing cover. Temporarily assemble compound countershaft, case-to-case gasket and compound case to the main case and countershaft.

4. Preload countershaft bearings as follows: Lubricate all bearings with SAE-30 oil. Wrap a string around countershaft 2nd-speed gear (largest integral gear)several times. Attach a spring scale to looped free end of string and with a steady pull, rotate the assembly *SLOWLY*. Repeat this operation and adjust thickness of rear bearing shim pack until the rolling-drag of 8 to 11 lbs.-pull is read on the scale. When correct shim pack thickness is established, remove compound case and compound countershaft from main case.

5. Position reverse cluster gear shaft so that slot in end of shaft will permit shaft lock to engage it. Start shaft into case. Assemble roller bearings and spacer in cluster gear. Position assembled gear in case and with a nylon hammer, tap shaft into case and gear. Install shaft lock and lock capscrew after tightening 60 to 65 ft.-lbs. with soft iron wire.

6. On bench, install compound mainshaft spigot roller bearing in end of mainshaft (compound driving pinion) and retain with snap ring.
Place gear end of mainshaft in vise with soft metal jaws. Install rear bearing cone, bearing retainer with two cups, bearing cone shims, front bearing cone and bearing split thrust washer. Adjust bearing shim pack thickness until end-play is .001 to .005″ then press or drive positioning ring over split washer. Install 3rd-speed thrust washer Woodruff key in shaft.

7. Remove mainshaft from vise and start in main case through rear bearing hole. As mainshaft is advanced into working position, slide parts on mainshaft as follows: 1st-speed gear, reverse gear fixed clutch, reverse gear, 2nd-speed gear, 3rd-speed fixed and sliding clutches, 3rd speed gear, engage 3rd-speed gear thrust washer and 4th-speed gear sleeve with Woodruff key. Install 4th-speed gear on sleeve. Install 4th/5th-speed toothed thrust washer and with a small tool, move washer one tooth so that inner teeth align with mainshaft splines. Install washer key in deepened spline root and install 4th/5th-speed sliding clutch on splines and over inlaid key.

8. At this point the mainshaft rear bearing retainer should be seated in the main case. Install retainer capscrews and tighten 60 to 65 ft.-lbs., then lock heads together with soft iron wire. Install inner race of spigot bearing on front end of mainshaft and retain with snap ring.

9. Assemble mainshaft spigot bearing in gear end of main driving pinion and retain with snap ring. Turn pinion over and place in vise with soft metal jaws. Install pinion ball bearing and bearing nut. Tighten nut (left-hand thread) 400 to 500 ft.-lbs., then positive stake lip of nut to pinion in slot provided. Install oil tube in pinion gear end and install pinion assembly in transmission case. *Be very careful not to damage oil tube as it engages mainshaft.* Install oil pump vane in pinion and install bearing cover. Tighten cover capscrews 75 to 80 ft.-lbs.

10. At this point, the main case should be positioned in a vertical position with the pinion pointing downward. If overhaul stand is not used, block up bell housing so that end of pinion clears the floor.

11. Clamp compound mainshaft in vise with soft metal jaws or improvised holding device and assemble as follows: Slide HI-split floating gear and fixed clutch on front end of shaft, install clutch nut (left-hand threads) and tighten 400 to 500 ft.-lbs., then positive stake lip of nut to shaft in slot(s) provided. Install inner race of bearing on shaft spigot.

12. Slide LO-split floating gear on fixed clutch and install both parts on rear end of compound mainshaft. Install sliding clutch on fixed clutch. Install LO-LO-split gear sleeve on shaft then slide LO-LO floating gear on sleeve. Press bearing cone on shaft next to sleeve, install double-row cup, cone spacer and shims, then press rear cone on shaft. With a piece of tubing over flange splines, place assembly in a press and with a load on bearing cones, measure bearing end-play. Add or remove shims between cones until end-play is .003 to .007″ as read on a dial gage, then remove double cup and rear bearing cone.

13. Slide HI-split clutch on its fixed clutch. Install interconnecting oil tube in end of mainshaft and carefully engage spigot of assembled compound mainshaft with oil tube and spigot bearing in end of mainshaft. *Be very careful not to damage oil tube as it engages compound mainshaft spigot.* Place compound countershaft (assembled earlier) on countershaft rear bearing cone and make sure all gears are properly meshed.

14. Paint end of main case with a good gasket sealer compound and install case-to-case gasket. Carefully lower compound case down over assembled parts and see that bearings are properly seated. Install case-to-case capscrews and dowel bolts. Tighten 90 to 100 ft-lbs. Install double-row rear bearing cup in compound case. Install rear bearing cone and speedometer gear. Apply gasket sealer in case and gasket and install rear bearing retainer gasket. Install retainer and capscrews with lockwashers. Tighten capscrews 90 to 100 ft.-lbs. Dip drive flange oil seal in oil and install in rear bearing retainer. Install drive flange and nut. Return transmission to normal position.

15. Lock up gear train by engaging both sliding clutches of the compound gearset. Tighten drive flange nut 800 to 1200 ft.-lbs., then install nut cotter pin. Return all sliding clutches to their neutral positions.

16. Position main case cover in bench vise with soft metal jaws. Install transmission case breather and toggle shifter levers. Starting with 1st and reverse speed shifter rail, start rail in cover and shifter, with a small blunt tool compress detent ball and spring, push rail past compressed ball, through a shifter and into neutral position. Install large interlock pin next to rail just installed. Install 2nd and 3rd-speed rail in same manner. Install small interlock pin in 2nd and 3rd-speed rail then another large pin between. Install short 1st and reverse speed rail with fork then 4th and 5th-speed rail with fork and shifter. Install shifter and fork setscrews, tighten 45 to 50 ft.-lbs., then lock to shafts individually with soft iron wire. Install new Welch plugs in shifter rail openings. Remove from vise.

17. Place compound case cover in vise with soft metal jaws. Dip new rail oil seals in oil and install. Install LO-split rail in cover and fork. Install interlock pin between rails. Install HI-split rail in cover and fork. Install pipe plug in pin hole. Install fork setscrews and tighten 45 to 50 ft.-lbs. Remove cover from vise.

18. Apply gasket sealer compound to case openings and cover gaskets and install gaskets on cases. Position sliding gear and all sliding clutches in neutral position. Install both assembled covers and make sure the shifter forks engage the grooves in their mating parts. Install cover capscrews with lockwashers and tighten 55 to 60 ft.-lbs.

19. Apply sealer compound to all other cover gaskets and install covers and capscrews with lockwashers. Check for proper shifting and free rotation of gears. Install clutch release shaft, yoke bearing, return spring and any other external part that was removed for disassembly. Recheck all fasteners for correct torques and locking means. Install all plugs, then remove transmission from stand.

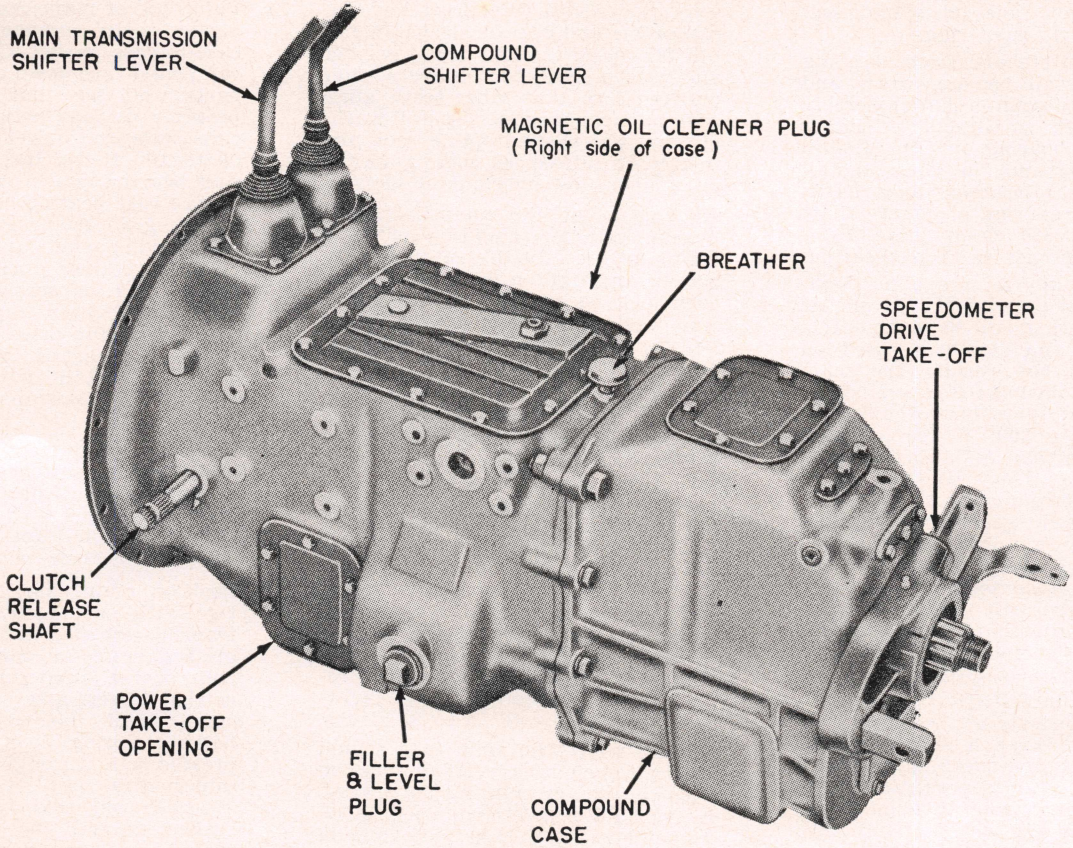

Fig. 6 Mack 20 speed TRQ-77 transmission

MACK 20 SPEED TRQ-77

Disassembly, Figs. 6 and 7

NOTE: Unless a complete overhaul is necessary, remove only those parts required to gain access to the faulty parts. Do not disturb parts having heavy press fits unless replacement is necessary. In that case, use proper press setups and pullers so that usable parts are not damaged. After cleaning all transmission parts with suitable solvent, inspect each part thoroughly. Replace worn or damaged parts, staked nuts, gaskets and cotter pins to avoid subsequent transmission failures.

1. After removing transmission from vehicle and cleaning externally, mount unit in a suitable overhaul stand. Remove hand brake parts, clutch release bearing assembly with return spring, clutch release shaft and yoke, P.T.O. covers and gear shifter hand control levers.
2. Remove ALL case covers and lay aside for bench disassembly. Engage sliding gear and ALL sliding clutches so that the entire gearset is locked up. Remove cotter pin from drive flange nut and then remove nut. Install standard puller and remove drive flange. Remove both rear bearing covers and save countershaft rear bearing shim pack intact. Slide speedometer gear off of mainshaft. Remove compound shifter rail ball poppet springs and balls. Through cover opening in top of compound case, remove setscrew from compound shifter control arm, withdraw long shifter rail from arm and both cases, then remove arm from compound case.
3. Remove setscrews from shifters and shifter forks in main case. Withdraw shifter rails from main case and at the same time remove shifters and shifter forks. CAUTION: *The spring-loaded balls under the shifter rails will fly out with CONSIDERABLE FORCE when released by withdrawing the rails. Therefore, it is advisable to hold a clean shop wiper over the holes while withdrawing the rails.* Be sure to save the balls, springs and rail interlock pin and balls for use at reassembly.
4. Remove all case-to-case dowel bolts and capscrews. With a large enough nylon headed mallet, tap compound case and separate it and the enclosed parts from the main case. Disassemble on clean bench.
5. Remove mainshaft rear bearing retainer capscrews and countershaft rear bearing snap ring. Remove main driving pinion bearing cover and countershaft front bearing cover capscrews. Remove bearing covers, connecting oil tube and tube seal as a unit and disassemble on bench.
6. Remove main driving pinion assembly from main case. Tap on gear end with nylon mallet if necessary to work it out of case. Clamp gear end securely in large bench vise with soft jaws. Unstake bearing nut and with wrench, remove nut. The threads are left-handed. Remove ball bearing by pressing or tapping off. Turn pinion over and remove retaining snap ring and spigot bearing from gear end of pinion.
7. Remove 4th/5th speed sliding clutch from mainshaft. Pry key out of mainshaft spline. With a small tool, rotate 4th speed gear thrust washer one spline and slide washer off of mainshaft.
8. Butt a soft drift against forward end of mainshaft and with a hammer, drive mainshaft rearward to separate rear bearing from case.
9. Carefully slide gears, sleeve, thrust washer, fixed clutch and sliding clutch from mainshaft while withdrawing mainshaft from rear of main case. Remove sleeve Woodruff key from mainshaft.
10. Clamp gear end of mainshaft securely in large bench vise with soft jaws. Remove retaining snap ring and pinion spigot bearing inner race from spigot end of mainshaft. Unstake rear bearing nut and with wrench, remove nut which also has a left-hand thread. Remove rear ball bearing and bearing retainer from main shaft. Turn mainshaft over and remove retaining snap ring

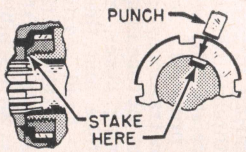

POSITIVE STAKING METHOD
USE SQUARE-NOSED PUNCH TO SHEAR METAL LIP OF NUT INTO MILLED SLOT ON SHAFT.

ALL FORKS IN SLIDING CLUTCHES SIDE-CLEARANCE___.005 TO .020

FLOATING GEAR	GEAR END-PLAY		BUSHING CLEARANCE	
(A) 4-TH/5-TH SPEED___	.004	.008	.0029	.0039
(B) 3-RD____ SPEED___	.004	.008	.0035	.0045
(C) 2-ND____ SPEED___	.004	.008	.0032	.0042
(D) COMPOUND HI-SPLIT__	.005	.009	.0039	.0049
(E) COMPOUND LO-SPILIT _	.005	.009	.0035	.0045
(F) COMPOUND LO-LO___	.005	.009	.0058	.0068

THRUST WASHER	AVAILABLE THICKNESS	
(W) 4-TH/5-TH SPEED GEAR SELECT FOR TIGHTEST FIT.	.214 .217 .221	.216 .219 .223
(X) 3-RD SPEED GEAR____	.248	.250
(Y) COMPOUND HI-SPLIT GEAR	.279	.281*
(Z) COMPOUND LO-LO GEAR_	.218	.220

* FOR SERVICE, WASHER COMES .300" THICK. SURFACE GRIND FOR TIGHTEST FIT.

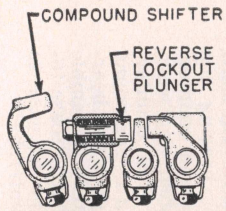

20-SPEED, 2-LEVER SHIFTER DETAIL

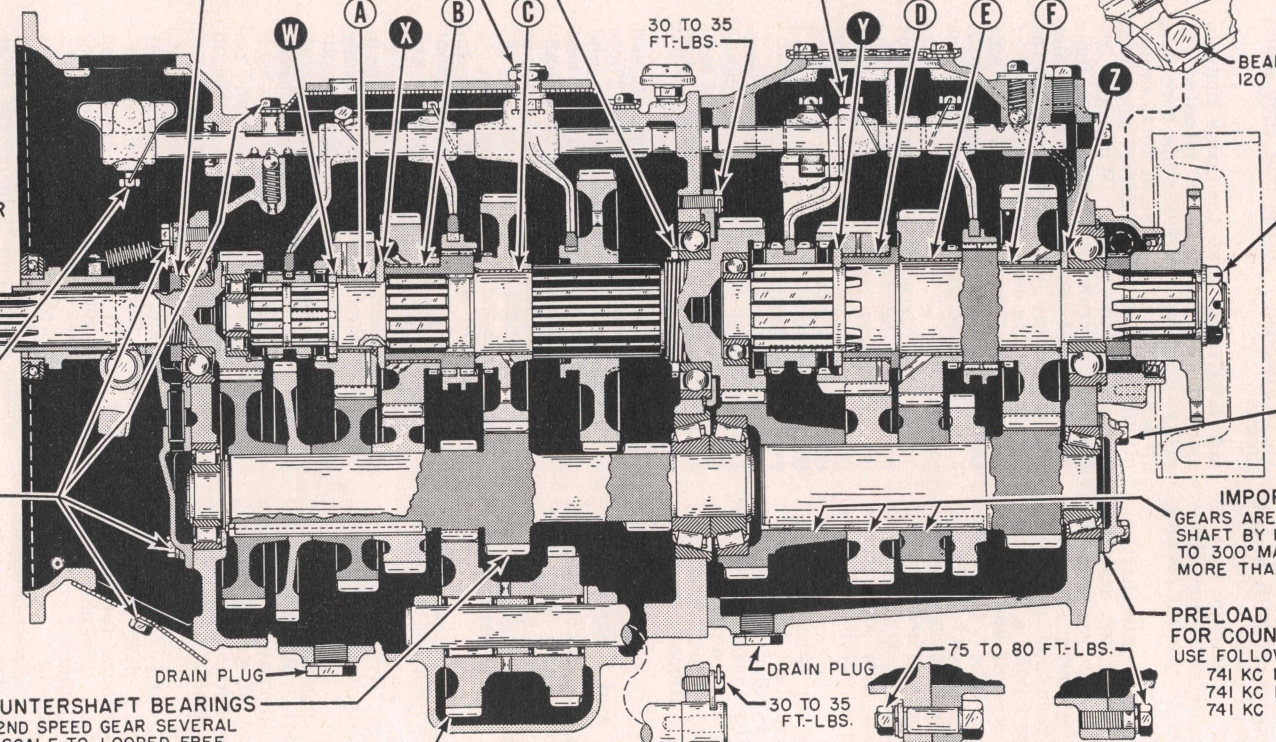

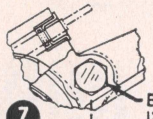

BEARING COVER CAPSCREWS 120 TO 130 FT.-LBS.

400 TO 500 FT.-LBS. USE 2-1/4" WRENCH

30 TO 35 FT.-LBS.

IMPORTANT NOTE
GEARS ARE TO BE SHRUNK-FIT ON SHAFT BY HEATING THEM 270° MIN. TO 300° MAX. FOR A PERIOD OF NOT MORE THAN 1/2 HOUR.

PRELOAD ADJUSTMENT SHIMS FOR COUNTERSHAFT BEARINGS
USE FOLLOWING SHIMS AS REQ'D.
741 KC 14-P1_____.005
741 KC 14-P2_____.007
741 KC 14-P3_____.020

PRELOADING OF COUNTERSHAFT BEARINGS
WRAP STRING AROUND 2ND SPEED GEAR SEVERAL TIMES. ATTACH SPRING SCALE TO LOOPED FREE END AND WITH A STEADY PULL, ROTATE ASSEMBLY SLOWLY. ADJUST REAR BEARING SHIM PACK UNTIL ROLLING-DRAG REQUIRED IS 9 TO 12 LBS.-PULL.

REVERSE IDLER GEAR
END-PLAY___.005 TO .019

USE PULLER 17-T-1643

COMPOUND MOUNTING FLANGE FASTENERS

Fig. 7 Mack 20 speed TRQ-77 transmission

and compound mainshaft spigot bearing.

11. Remove reverse gear shaft lock and with puller 17-T-1643, withdraw gear shaft from case. Remove cluster gear, bearings and bearing spacer from case.
12. Slide countershaft rearward and partially through rear bearing opening. Install segmented puller on inside bearing cone and remove both cones. Remove countershaft case-mounted bearing parts with a soft steel drift. When using a drift, be very careful not to damage part or case and apply alternate equal blows to opposite sides to prevent cocking of part in the case.
13. Tilt forward end of countershaft upward and remove entire assembly from case. Remove countershaft front bearing retaining snap ring, bearing inner race and gear snap ring. For shops having a small hydraulic press, press off one countershaft gear at a time. For shops having a large capacity hydraulic press, place countershaft assembly in press, slide length of heavy tubing over countershaft integral gears to engage 3rd speed gear and remove all gears in one operation. Remove gear key.
14. Remove bearing cup from compound countershaft constant-mesh gear. With segmented puller, remove rear bearing cone. Remove gears in hydraulic press one at a time or all in one operation, depending on capacity of press. Remove gear key from shaft.

Inspection and Repair

1. Wash and clean all parts thoroughly in clean solvent and dry with moisture-free compressed air. Do not spin bearings with compressed air as damage to the bearing may result.
2. Replace bearings which are pitted and/or spalled. Replace lubricated bearings having excessive axial or radial clearances. Replace cases if outer races of bearings turn freely in case bores.
3. Replace gears having pitted or badly worn teeth. Replace gears with damaged internal or external teeth as a result of gear clashing. Floating gears having excessive radial clearance should be rebushed and bored to size.
4. Check all splines. If excessive wear is obvious, replace part or parts. Check thrust washers for scored surfaces or reduced thickness from excessive wear. Replace if either or both conditions prevail.
5. Check all gray iron parts for cracks and breaks. Case castings may be welded or brazed provided cracks do not extend into bearing bores or bolting surfaces. Replace or repair parts found to be damaged.
6. Check all other parts for wear and damage. Replace all parts that cannot be repaired or straightened. Replace all gaskets, damaged oil seals, O-rings, staked nuts and any part that shows mutilation. Replace poppet springs that have lost their tension. Clean up any threads that show mutilation.

Reassembly

NOTE: All working parts, especially the bearings, should be generously coated with SAE-30 oil while the transmission is being assembled. This will assure immediate lubrication when first starting and will prevent seizing of these parts. As moving parts are assembled, check frequently to see that they move freely.

GASKETS: So that the same instructions do not have to be repeated for every operation, we will state here that ALL new cover gaskets at final assembly are to be coated on BOTH sides with a good gasket sealer. When the attaching capscrews are tightened to their recommended torque values, the sealer will assure leak-proof joints between the covers and the case. The metal shell of oil seals that contact whatever retains them, should also be coated lightly with a good gasket sealing compound before installation.

In most cases, it is easier to coat metal parts rather than the gasket. The dry gasket can be placed in position on the transmission case since the sealing compound is adhesive enough to hold the gasket until the cover is attached over it and fastened by capscrews.

As a further measure against oil leakage, additional sealing compound should be applied around the entire joint of each cover under which there is either a shim pack or a gasket.

1. Insert gear key in countershaft and press gears on one at a time. These gears have an interference fit and can be pressed on cold but for best results, the gears should be shrunk-fitted on shaft. With a heat lamp or hot oil, heat gears 270° to 300° F. for a period of not more than ½ hour. Oil shaft for each gear. Install gear snap ring, install front bearing inner race on spigot and retain with its snap ring.
2. Install countershaft front bearing in case. Place countershaft assembly in case with small end extending out of rear bearing opening. Install rear bearing cup in case. Install tapered roller bearings back-to-back on rear end of countershaft and retain with its snap ring. Position countershaft in front bearing.
3. Insert gear key in compound countershaft and press gears on one at a time. These gears have an interference fit and can be pressed on cold but for best results, the gears should be shrunk-fitted on shaft. With a heat lamp or hot oil, heat gears 270° to 300° F. for a period of not more than ½ hour. Oil shaft for each gear. Press bearing cup in front end of compound countershaft constant-mesh gear and bearing cone on rear end. Push countershaft rear bearing cup in compound case and install shim pack and bearing cover. Temporarily assemble compound countershaft, case-to-case gasket and compound case to the main case and countershaft.
4. Preload countershaft bearings as follows: Lubricate all bearings with SAE-30 oil. Wrap a string around countershaft 2nd-speed gear (largest integral gear) several times. Attach a spring scale to looped free end of string and with a steady pull, rotate the assembly *SLOWLY*. Repeat this operation and adjust thickness of rear bearing shim pack until the rolling-drag of 9 to 12 lbs.-pull is read on the scale. When correct shim pack thickness is established, remove compound case and compound cluster gear from main case. Then continue reassembly of main case.
5. Position reverse cluster gear shaft so that slot in end of shaft will permit shaft lock to engage it. Start shaft into case. Make sure that gear is not in reversed position. Assemble roller bearings and spacer in cluster gear. Position assembled gear in case and with a nylon hammer, tap shaft into case and gear. Install shaft lock and lock capscrew with soft iron wire after tightening 30 to 35 ft.-lbs.
6. On bench, install compound, mainshaft spigot ball bearing in end of mainshaft (compound driving pinion. Place gear end of mainshaft in vise with soft metal jaws. Place mainshaft rear bearing retainer on shaft, then install bearing. Install bearing nut (left-hand thread) and tighten 400 to 500 ft.-lbs. Positive stake lip of nut into slot or slots provided in the mainshaft for this purpose. Install bearing inner race on mainshaft spigot and retain with snap ring.
7. Remove mainshaft from vise and start in main case through rear bearing hole. As mainshaft is advanced into working position, slide parts on mainshaft as follows: 1st speed gear, 2nd speed gear, 3rd speed fixed and sliding clutches, 3rd speed gear, thrust washer Woodruff key, thrust washer, 4th/5th speed gear sleeve, gear and thrust washer. At this point, the mainshaft rear bearing should be seated in the main case. Install bearing retainer capscrews and tighten capscrews 30 to 35 ft.-lbs., then lock heads together with soft iron wire.
8. With a small tool, move 4th/5th speed gear thrust washer one tooth so that inner teeth align with mainshaft splines. Install washer key in deepened spline root and slide 4th/5th speed sliding clutch on splines and over inlaid key.
9. Assemble mainshaft spigot bearing in gear end of main driving pinion and retain with snap ring. Turn pinion over and place in vise with soft metal jaws. Install pinion ball bearing and bearing nut. Tighten nut (left-hand thread) 400 to 500 ft.-lbs. then positive stake lip of nut to pinion in slot provided. Install pinion assembly in transmission case. On bench, insert oil tube in main driving pinion bearing cover, slide rubber seal over tube and then assemble countershaft front bearing cover on free end of oil tube so that this assembly is ready to be installed on the main case as an assembly. Apply a good gasket sealer to the case and

position bearing cover gaskets on case so that capscrew holes are aligned. (The sealer will hold the gaskets in place.) Apply gasket sealer to contacting surfaces of bearing covers and install covers over bearings. Install capscrews with lockwashers and tighten pinion cover and countershaft bearing cover capscrews 30 to 35 ft.-lbs.

10. At this point, the main case should be positioned in a vertical position with the pinion pointing downward. If overhaul stand is not used, block up bell housing so that end of pinion clears the floor.
11. Position compound mainshaft in arbor press with spigot end down. Slide LO-LO split floating gear and thrust washer on shaft. Remove snap ring from outer race of ball bearing and press bearing on shaft. Remove assembly from press and clamp in bench vise with soft metal jaws so that spigot end is up. Install LO/LO-LO split sliding clutch on splined shoulder of shaft. Slide LO-split floating gear and HI-split floating gear with sleeve on front end of compound mainshaft. Slide splined HI-split floating gear thrust washer on splines of compound mainshaft until it engages sleeve. With a small tool move thrust washer one tooth so that inner teeth align with mainshaft splines. Install washer key in deepened spline root so that it engages thrust washer and slot in HI-split floating gear sleeve. Slide DIRECT/HI-split sliding clutch on splined front end of compound mainshaft and over inlaid key, thus locking key in position. This sliding clutch is marked DIRECT on one end and it is *very important* that this end be assembled so that it will engage the driving pinion (mainshaft).
12. Loosen vise and hold assembled parts together while transferring assembled unit from bench to upright transmission. Install spigot end in ball bearing in gear end of driving pinion (mainshaft). Place previously assembled compound countershaft upright on rear bearing cone of main box countershaft and make sure all compound gears are properly meshed.
13. Paint end of main case with a good gasket sealer compound and install case-to-case gasket. Paint rim of gasket with sealer and lower compound case down over assembled shafts. Tap case into position so that bearings are seated properly, then install case-to-case capscrews and dowel bolts and tighten 75 to 80 ft.-lbs. Reinstall snap ring in outer race of compound mainshaft rear ball bearing. Install speedometer drive gear on shaft. Apply sealer compound and install rear bearing cover gasket and cover. Install cover capscrews with washers and tighten 120 to 130 ft.-lbs. Apply sealer compound to metal part of drive flange oil seal and install seal in rear bearing cover. Oil lip of seal, install drive flange and nut. Return transmission to normal position.
14. Lock up gear train by engaging sliding gear and all sliding clutches. Tighten flange nut 400 to 500 ft.-lbs. Install nut cotter pin.
15. Oil and install shifter oil seals in main case. On bench, install shifters on shaft ends. Starting with 1st and reverse speed shifter shaft, install spring and poppet ball in case, start shaft in case and with a blunt tool, compress spring-loaded detent ball and at the same time push shaft over ball. Engage 1st speed fork in sliding gear and push shifter shaft through fork hub and all the way into working position. Install fork setscrew, tighten and lock with soft iron wire. Install shifter shaft interlock ball next to shaft just installed, install poppet spring and ball in case for 2nd/3rd speed shaft, compress spring-loaded detent ball and pass 2nd/3rd speed shaft over it. Install interlock pin in shaft, engage 2nd/3rd speed fork with sliding clutch then push shaft on through and secure fork. Install interlock ball next to pin, start 4th/5th speed shifter shaft in case, compress detent springloaded ball and push shaft over it. Engage fork with 4th/5th speed sliding clutch and push shaft on through to working position. Secure fork to shaft. Tighten all shifter and fork set screws 45 to 50 ft.-lbs. Then lock with soft iron wire.
16. Through opening in top of compound case, install DIRECT/HI-split shifter fork in groove provided in sliding clutch. Also install LO/LO-LO split shifter fork in groove provided in its sliding clutch. Hold LO-LO split shifter fork in working position and insert its shift rail in compound case from the rear. Push rod in case and through hole in fork. Also hold rail shifter in working position and push rail through hole provided in shifter. Install setscrews in shifter and shifter fork. Make sure tapered end of setscrews enter locating detents in rail, then shift into neutral position. Install rail interlock ball in space provided between rails. While holding previously installed DIRECT/HI-split shifter fork in working position, insert its shift rail in compound case from the rear and push through hole provided in fork. Install fork setscrew and shift rail to neutral position.
17. Insert long compound control shift rail in hole provided in main case and push rearward until end appears at compound case. Engage compound control shifter arm in compound shifter slots and hold in working position. Continue pushing on long shift rail until it passes through control arm and into rear support hole. Install control arm setscrew. Tighten all four shifter and fork setscrews 40 to 50 ft.-lbs., then lock each setscrew to its rail with soft iron wire. Install compound shift detent balls and springs in holes provided at rear of case over the rails. Apply sealer to spring cover and rail end cover. Install gaskets, covers and capscrews with washers. Tighten capscrews 30 to 35 ft.-lbs.
18. Install travel-limiting pins for the shifter rails in holes provided. Check for free rotation of gears. Apply sealer compound to cover gasket and install on case. Assemble shifter toggle(s) to cover and install case cover. Install clutch release shaft, yoke, bearing return spring and any other external part that was removed for disassembly. Recheck all fasteners for correct torques. Install all plugs, then remove transmission from stand.

MACK 5 & 10 SPEED UNITS

In overhauling these transmissions, refer to Figs. 8, 9 and 10 and to the text which follows. Do not disturb sub-assemblies more than necessary to inspect parts and make repairs.

Disassembly

1. Remove case cover.
2. Lock gears by engaging two sliding clutches and remove drive flange.
3. On five speed units, remove mainshaft rear bearing cover.
4. Remove shifter rails and forks from main transmission.
5. Remove clutch collar, yoke and shaft.
6. On ten speed units, remove case-to-case capscrews and separate compound from main case.
7. On mono-shift units, remove shift cylinder and piston before separating cases. The internal parts of the mono-shift compound cannot be removed with the case because the forward synchronizer is retained by the main transmission mainshaft. Tap shift rail and mainshaft as cases are separated. Then disassemble synchronizer as necessary to remove mainshaft and cluster gear.
8. Remove drive pinion bearing cover together with forward countershaft bearing cover.
9. On units with direct drive on fifth, pull drive pinion together with bearing forward from case.
10. Remove mainshaft rear bearing retainer and slide mainshaft rearward as far as possible. Slide 4th and 5th speed clutch from shaft. Pry key from mainshaft spline and remove star washer from floating gear. Slide remaining parts from mainshaft as shaft is withdrawn through rear bearing opening in case.
11. Remove reverse idler gear cluster.
12. Remove bearing covers and lower countershaft.
13. On units with direct drive on fourth, the main drive pinion may now be removed by detaching the bearing retainer ring and withdrawing the bearing and pinion assembly through inside of case.
14. On ten-speed units, to pull the bearing for countershaft removal, make split bearing cup and retainer ring to fit over forward bearing rollers.
15. Tilt forward end of countershaft upward and remove assembly from case.

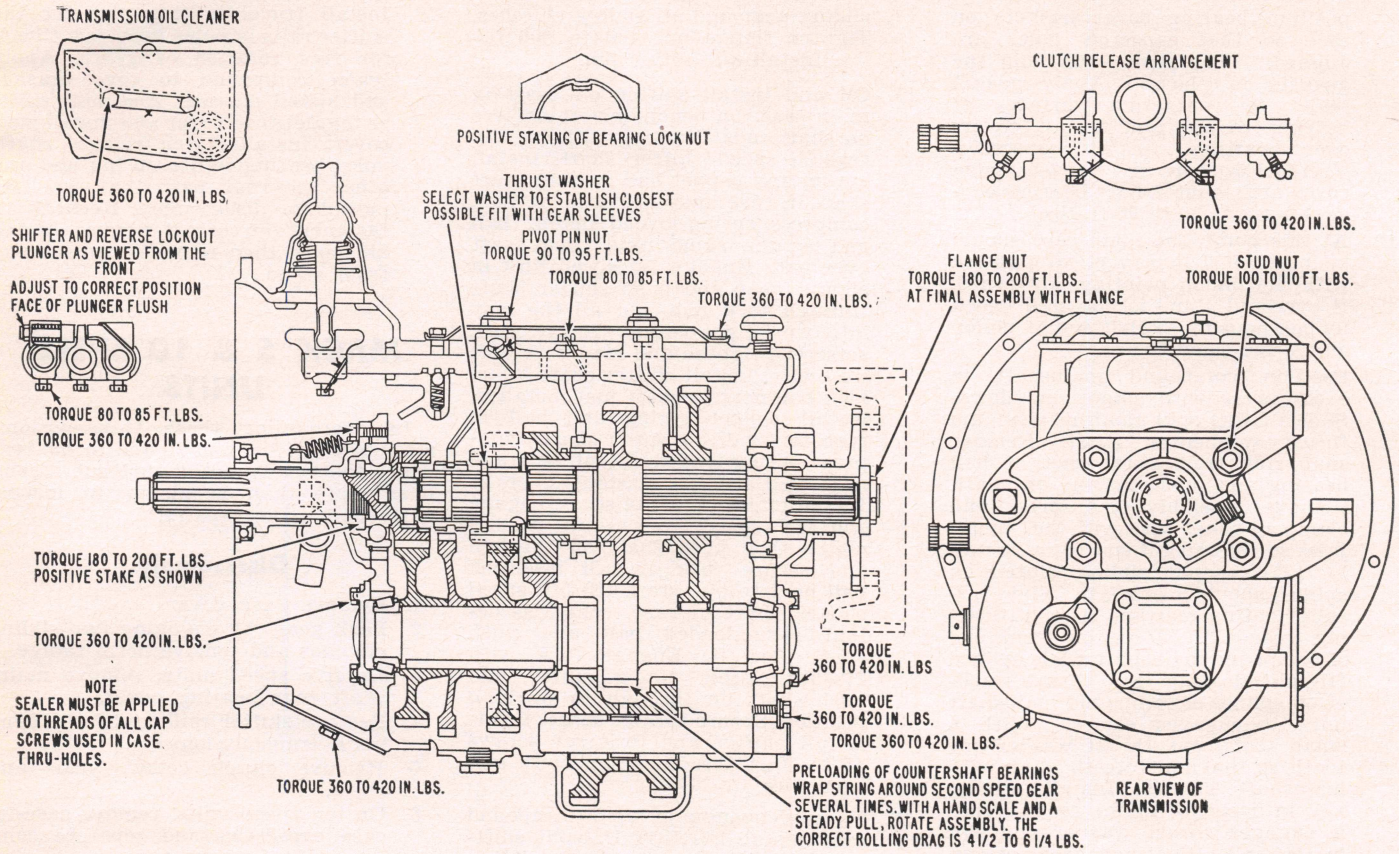

Fig. 8 Mack five speed transmission

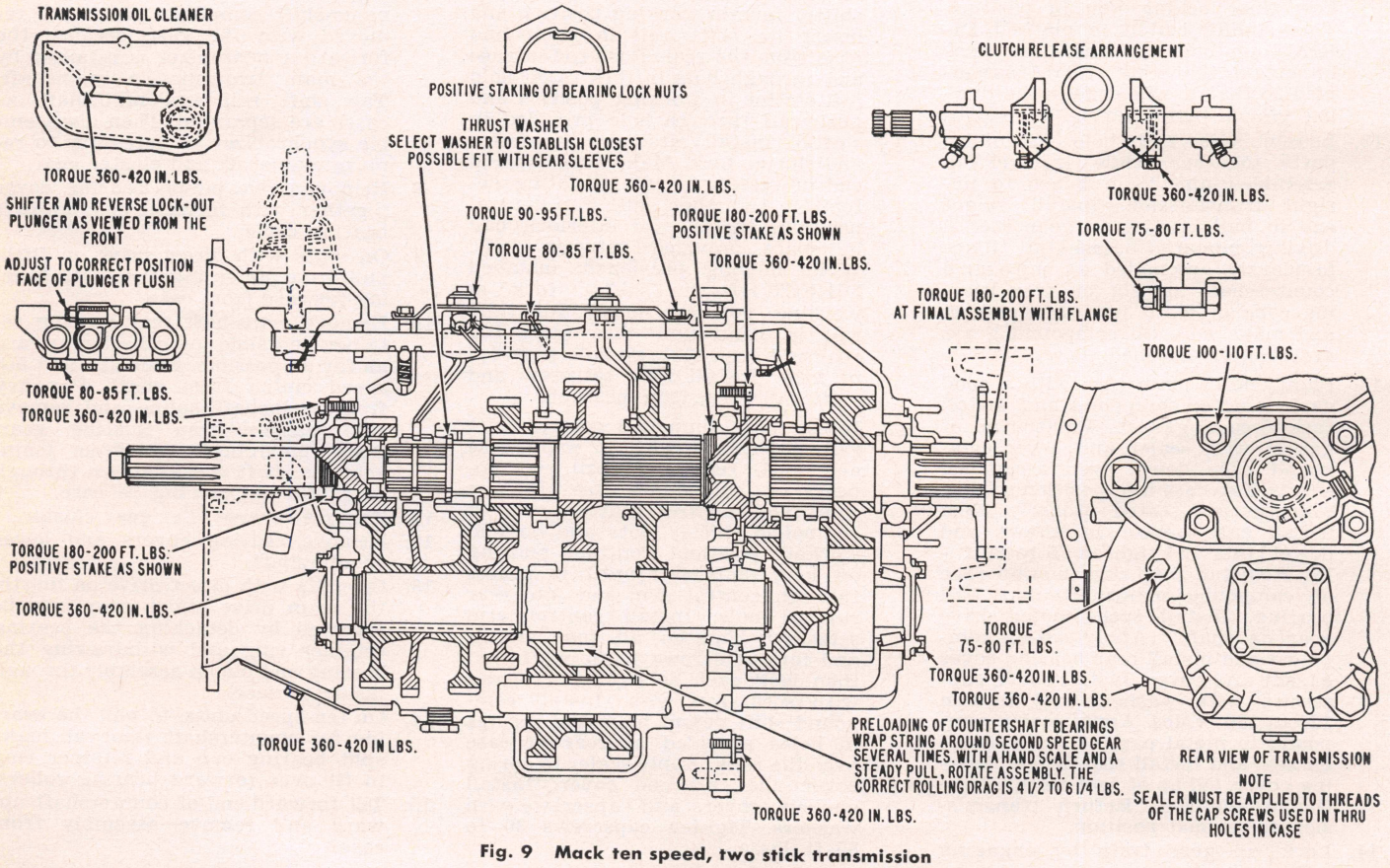

Fig. 9 Mack ten speed, two stick transmission

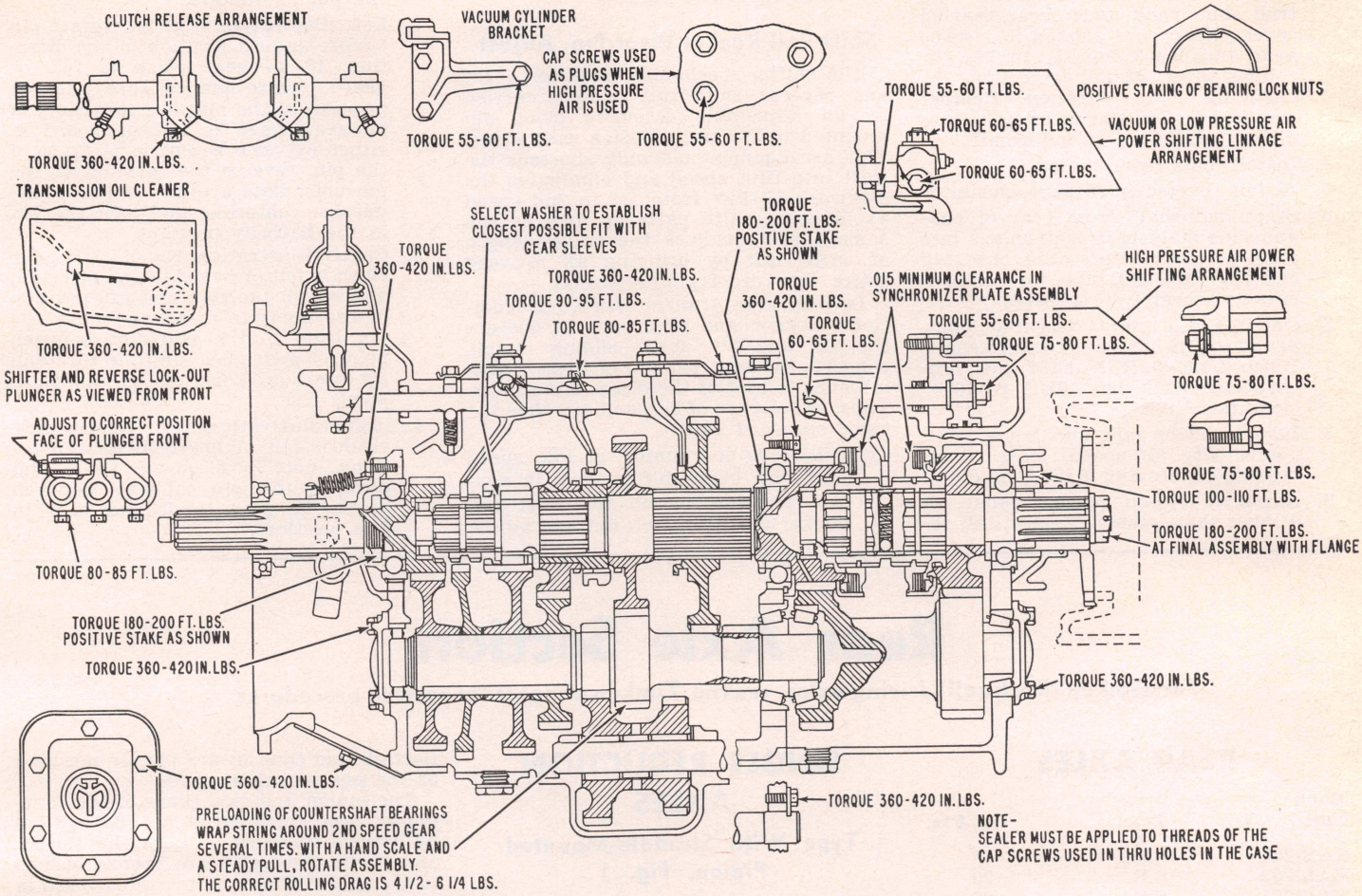

Fig. 10 Mack ten speed monoshift transmission

Sub-Assemblies

Compound Mainshaft—On two-stick jobs, support floating gear on heavy tubing. Then press shaft through bearing and case.

Countershaft Gears—Remove countershaft front bearing inner race and gear snap ring from shaft. Slide length of heavy tubing over countershaft to engage 3rd speed gear. Place assembly in 75-ton press and remove all gears in one operation. Mated gears, if defective, must be replaced in matched sets.

Floating Gear Bushings—Be sure to align oil holes. Press bushings in .010″ to .015″ below face of bore and force bushing into four notches before burnishing. Lubricate broach with a water soluble oil mixture. Recess opposite end of bushing .035″ to .040″ after burnishing and then break sharp corner of bushing.

Reassembly

1. Lubricate all moving parts during assembly to insure initial lubrication when first run. As moving parts are assembled, check frequently to see that they are free.
2. Position countershaft and gear assembly in case.
3. Install countershaft bearing components (also compound case and

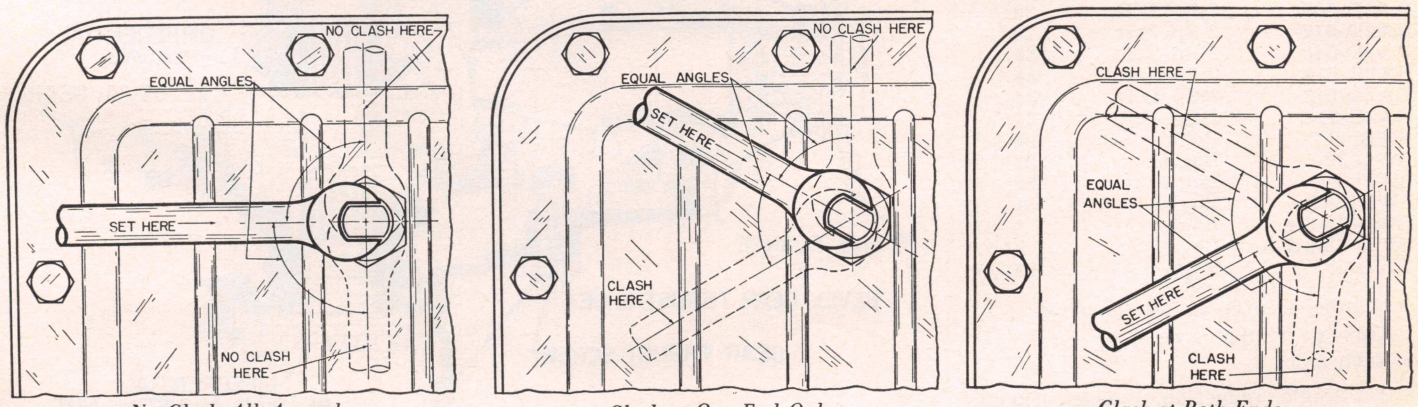

No Clash All Around *Clash at One End Only* *Clash at Both Ends*

Fig. 11 Adjustment of shift rail rocker eccentric pivot pin

countershaft when 10-speed) with trial shim pack under rear bearing cover. Wrap cord around 2nd speed gear and check for 9¼ to 12¼ lb. rolling drag. Make corrections by changing shim selection. Remove compound case and countershaft to allow installation of mainshaft.

4. Install main drive pinion.
5. Install reverse idler gear cluster.
6. Start mainshaft from rear of case and slide mainshaft components into place as shaft enters case, checking end play and clearance of components as assembly progresses.
7. On 10-speed units, assemble compound mainshaft and countershaft. When mono-shift, be sure each synchronizer pack has .020″ to .040″ clearance.
8. Install shifter rails and forks, compound case (10-speed), case cover, bearing covers and drive flange.
9. Assemble clutch release collar on driving shaft pinion. Then install release shaft and yoke.

Shift Rail Rocker Pivot Pin, Adjust

The shifter mechanism includes a 1st and reverse shift rail rocker, carried by an adjustable eccentric pivot pin mounted in the transmission case cover. This arrangement not only shortens the shift into first speed and eliminates the awkward U-shift from 1st to 2nd speed as in some shift patterns, but at the same time, equalizes the travel length of each shift by bringing all forward shifts into orderly progression.

In overdrive transmissions, an additional rocker and pivot pin to operate the 4th and 5th speed sliding clutch, converts the shift pattern of these transmissions to that of the direct-drive units. Thus, either type of transmission has the same standard shift.

1. With engine running at idle speed and with hand shifter lever in neutral position, loosen the shift rail rocker pivot pin lock nut and adjust the pin as follows:
2. Left illustration, Fig. 11. Rotate pin to fore and aft position in one direction. If no gear clash is felt or heard, rotate pin to fore and aft position in the opposite direction. If no gear clash is felt or heard in either extreme eccentric position of the pin, reverse the rotation of the pin until flats are 90° to the transmission centerline and lock the pin in the halfway position.
3. Center illustration, Fig. 11. If gear clash is felt or heard in one direction and not in the fore and aft position in the opposite direction, move the pin back to the midpoint between point of gear clash and the fore and aft position. Lock pin at this midpoint.
4. Right illustration, Fig. 11. If gear clash is felt or heard in both directions, note position of flats, and position the pin midway between points of gear clash and lock in this position.

Rear Axle Section

For Timken (Rockwell) driving axles, see the Timken chapter for service procedures

REAR AXLES

Mack Unit No. ①	Type	Oil, Pts.
RAS-201	S.R.	8
RAS-202	S.R.	20
RAS-301	S.R.	26
RAS-507	S.R.	32
RAS-508	S.R.	32
RAS-509	S.R.	32
RAS-512	S.R.	32
RAD-111	D.R.	26
RAD-1141	D.R.	26
RAD-302	D.R.	31
RAD-303	D.R.	31
RAD-507	D.R.	31
RAD-508	D.R.	31
RAD-509	D.R.	31
RAD-512	D.R.	31
RAD-515	D.R.	31
RA2D-201	2 Sp. D.R.	26
RA2D-301	2 Sp. D.R.	29
RA2D-507	2 Sp. D.R.	29
RA2D-508	2 Sp. D.R.	29
RA2D-509	2 Sp. D.R.	29
RA2D-512	2 Sp. D.R.	29
RA2D-510	2 Sp. D.R.	34
RA2D-511	2 Sp. D.R.	34
RA2D-513	2 Sp. D.R.	34
RA2D-514	2 Sp. D.R.	34
SWS-50	Bogie	24 ③
SWD-32	Bogie	22½ ③
SWD-322	Bogie	22½ ③
SWDR-48	Bogie	31 ③
SWD-52-3-4	Bogie	8 ③
SWD-55-6-7-8	Bogie	8 ③
SWD-59	Bogie	22½ ③

① Number located on axle housing.
② This is a Timken axle.
③ Each axle.

S.R.—Single reduction. D.R.—Double reduction. 2-Sp. D.R.—Two-speed double reduction.

SINGLE REDUCTION AXLES

Type With Straddle-Mounted Pinion, Fig. 1

These single-reduction axle carriers have either a spiral bevel or hypoid gearset. Machined bosses on the differential bearing pedestal caps register against corresponding machined diameters in the axle housing to restrict pedestal deflection and thus insure proper meshing of the gearset under load.

The pinion and side gears of the four-pinion type differential are backed up by bronze washers to take the thrust, and the pinion gears are bronze bushed to the spider. These parts are enclosed in a differential case consisting of two mated halves bolted together, carried in a pair of tapered roller bearings. The bearings are mounted in the pedestals and can be adjusted by nuts at the outer cups. These nuts also permit positioning

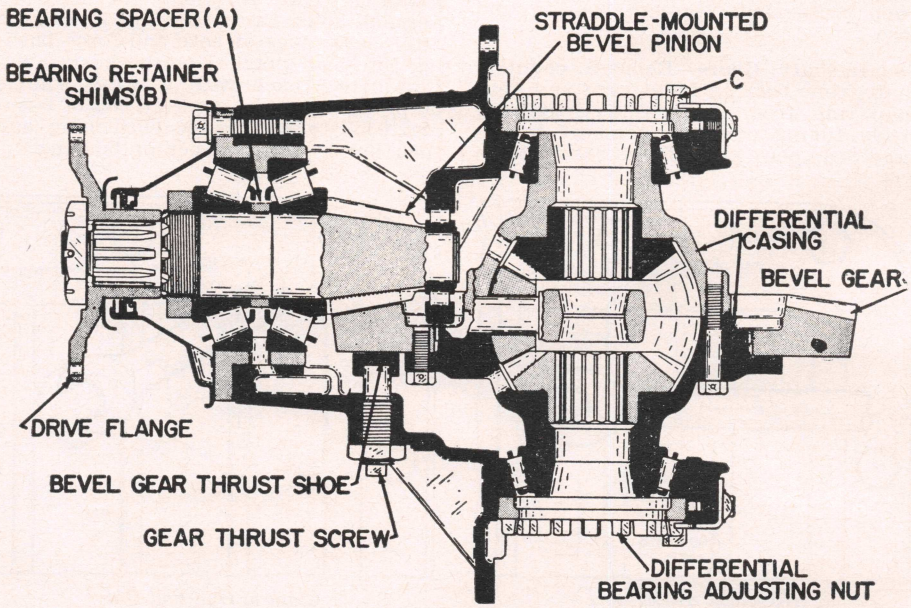

Fig. 1 Typical Mack single-reduction rear axle with straddle-mounted pinion

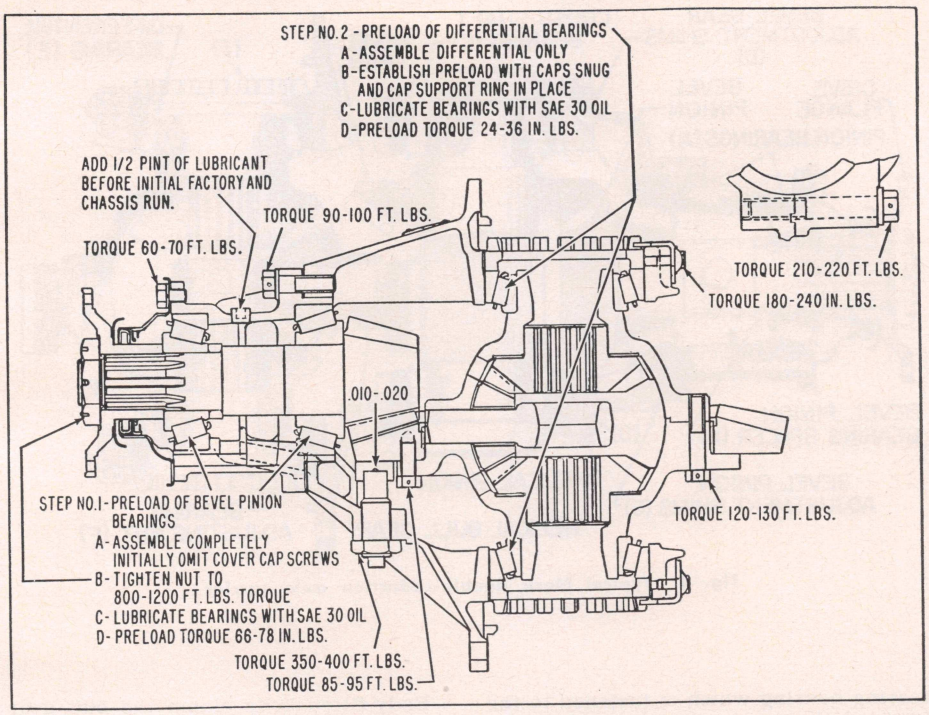

Fig. 2 Mack single-reduction carrier showing bearing preloads and screw torques

of the ring gear for proper tooth contact. Body-fitted capscrews secure the ring gear to the differential case.

The drive pinion is straddle-mounted, with a spigot bearing at the gear end. Two tapered roller bearings, back-to-back and carried in a separable housing, support the drive flange end and restrict end thrust. Bearing adjustment is obtained by varying the length of the spacer between the bearing cones, and tooth contact is adjusted by shims between the carrier and pinion bearings.

Deflection of the ring gear under load is restrained by an adjustable shoe, in back of the gear, opposite the point of contact with the drive pinion.

As a guide in servicing these axles, see the procedure outlined in the *Rear Axles* chapter for Timken Single-Reduction units.

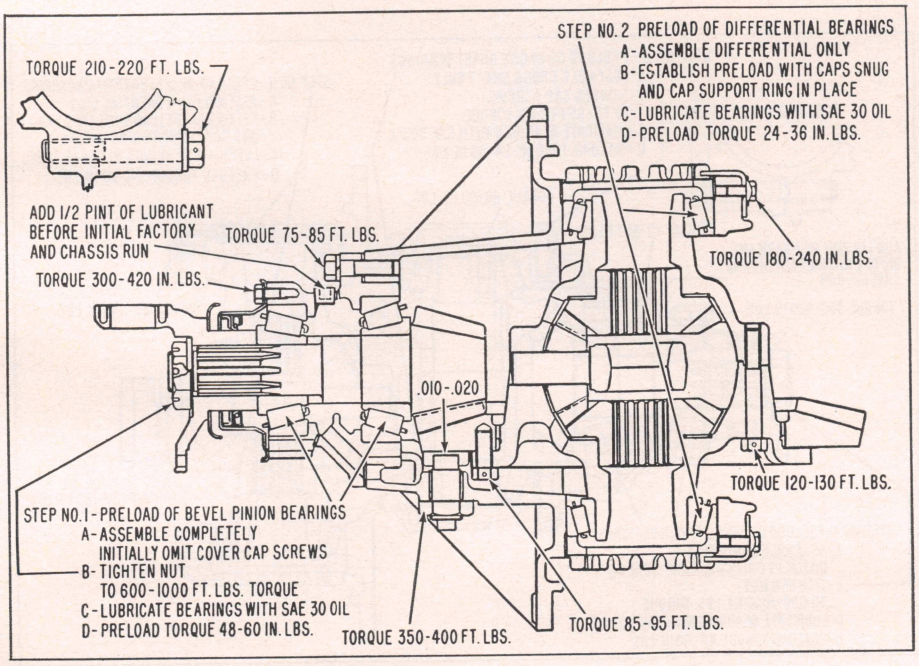

Fig. 3 Mack CRS-76 single-reduction carrier showing bearing preloads and screw torques

Type Without Pinion Spigot Bearing, Figs. 2 & 3

These single-reduction axle carriers have a spiral bevel gearset. A separate housing, attached to the carrier housing by capscrews, is the mounting for the tapered roller bearings which carry the drive pinion. The ring gear and three-pinion differential are supported by another pair of tapered roller bearings mounted in the carrier housing differential bearing pedestals. Positively torqued capscrews are used in all bolting locations, thus eliminating the use of studs or bolts.

Machined bosses on the pedestal bearing caps register against corresponding machined diameters in the axle housing to restrict pedestal deflection and thus insure proper meshing of the gearset under load. Deflection of the ring gear under load is restrained by an adjustable shoe in back of the gear, opposite the point of contact with the drive pinion.

The drive pinion bearing arrangement has been designed so as to take the thrust load developed without endwise movement of the pinion. Bearing adjustment is obtained by varying the length of the spacer between the outer bearing cone and the shaft shoulder. Gear tooth contact is adjusted by varying the shim pack thickness between the carrier and drive pinion housings and adjusting the position of the ring gear.

The differential pinion and side gears are backed up by bronze washers to take the thrust, and the pinion gears are bronze bushed to the spider. The casing halves are machined with thick-walled steel forgings having wide, mated bolting flanges. A ring of capscrews clamp the casing halves together and thus form a rigid enclosure for the differential parts. This type of casing construction distributes driving torque and pressures equally. The left-hand differential casing has a splined pilot which engages internal splines of the ring gear. Another ring of capscrews attach the gear to the left-hand casing bolting flange. Driving torque is transmitted from the ring gear through the splines to the differential, thus relieving the gear capscrews of any shearing action. Slotted adjusting nuts, which bear against the differential bearing cups, are threaded to the pedestals to provide for the preloading of these bearings and also provide a means of positioning the ring gear for proper tooth contact.

One involute spline on the differential casing flanged half and the mating involute space on the ring gear are marked to facilitate aligning the ring gear bolt holes when assembling.

DOUBLE REDUCTION AXLES

A typical Mack double-reduction carrier is shown in Fig. 4. It has a spiral bevel gearset for the first reduction and helical gears for the second reduction.

Tapered roller bearings are provided throughout. And as is the case with the single-reduction carrier described above, the pinion bearings are preloaded by varying the length of the spacer between the bearings, and differential bearings are preloaded by adjusting nuts. The cross shaft bearings are preloaded by proper selection of shims. Proper pinion and ring gear tooth contact is obtained by varying shim packs "G" and "D", Fig. 4.

As a guide to servicing these carriers, see the *Rear Axles* chapter for double reduction repair procedures. Figs. 5 and 6 show the bearing preloads and screw torque requirements on two models of these carriers.

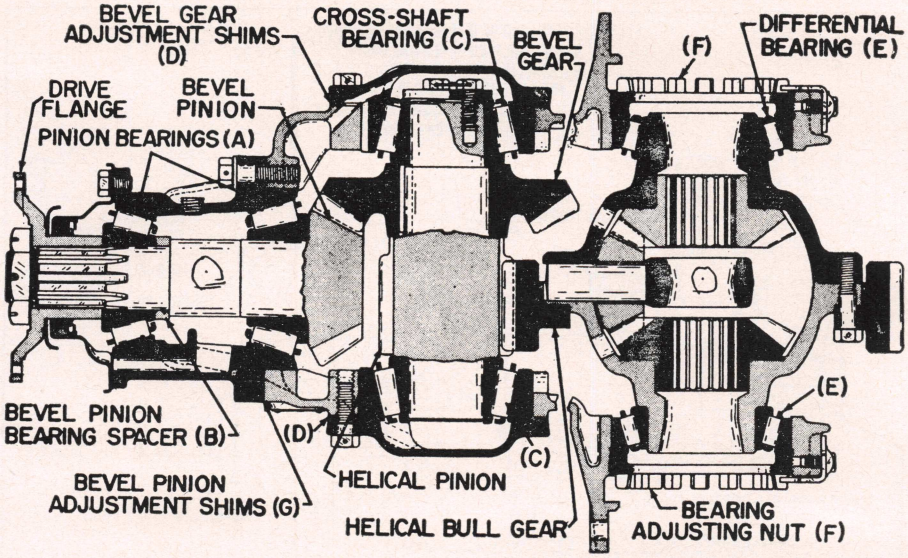

Fig. 4 Typical Mack double-reduction axle carrier

bearing housing which is fastened to the front of the carrier housing.

Beyond the differences stated above, both carriers are the same. The spur pinion shaft and spiral bevel gear mounted at right angles to the bevel pinion shaft, are carried by a pair of tapered roller bearings, one mounted in the carrier housing and the other in a separable bearing retainer. Proper bevel gear mesh is obtained by varying the thickness of the shim packs between the carrier housings and the pinion gear housings or retainers.

Body-fitted bolts clamp the bull gear to the differential casing which also carries the differential pinion gears. Long body-fitted through bolts clamp the casing between the casing covers, thus forming an enclosure for the differential side and pinion gears. This assembly turns in a pair of tapered roller bearings at the outer ends of the casing covers, the bearings being mounted in the carrier pedestals. Preloading of these bearings is provided for by a slotted adjusting nut threaded to the inboard side of the right-hand bearing cup.

TANDEM AXLES

These tandem double-reduction axle carriers, Fig. 7, 8 and 9, each have a spiral bevel gearset for the first reduction, spur gears for second reduction and a three-pinion type differential. In addition, the forward carrier has an inter-axle power divider which consists of a driving cage, plungers, male and female cams. The driving cage carries two rows of stagger-indexed plungers which reciprocate between the male and female cam lobes when unequal resistance is offered by the cams and are stationary when equal resistance is offered. The female cam drives the forward carrier and the male cam, connected through the inter-axle propeller shaft, drives the rearward carrier.

A separable housing, fastened to the front of the forward carrier by capscrews, contains the inter-axle power divider with the drive pinion and through shaft in a quill arrangement. The pinion is carried in a pair of tapered roller bearings and has a spigotted roller bearing at the forward end to maintain power divider cage and outer cam alignment.

In the rearward carrier, the drive pinion shaft is carried by a pair of tapered roller bearings in a separable

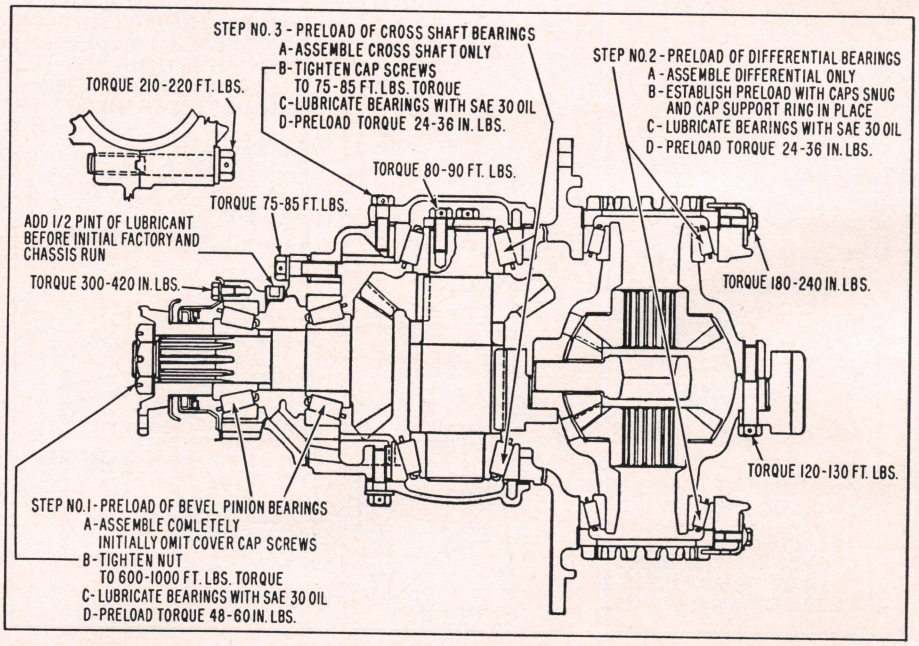

Fig. 5 Mack double-reduction carrier showing bearing preloads and screw torques

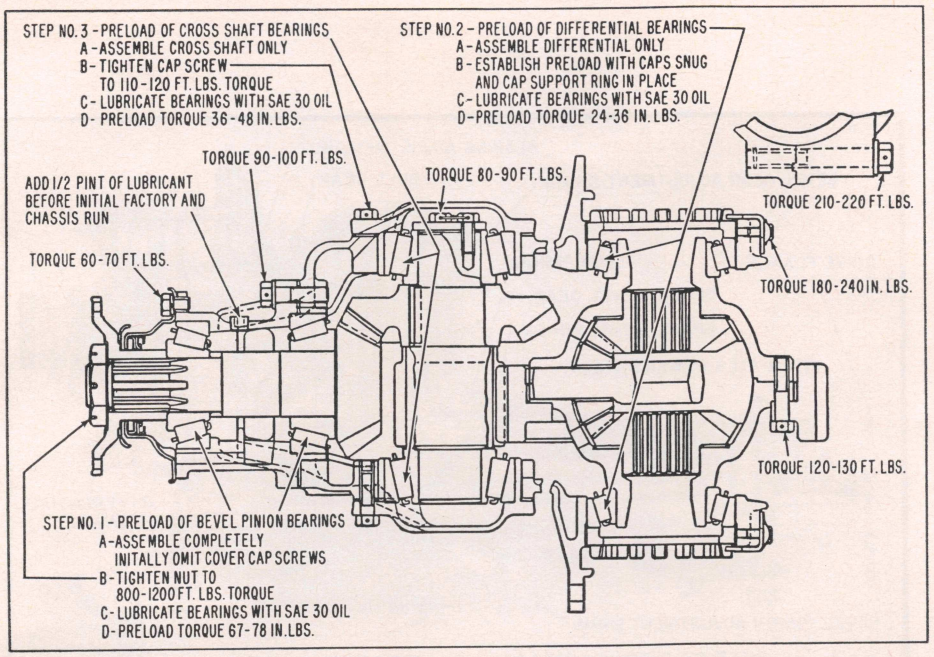

Fig. 6 Mack double-reduction axle carrier showing bearing preloads and screw torques

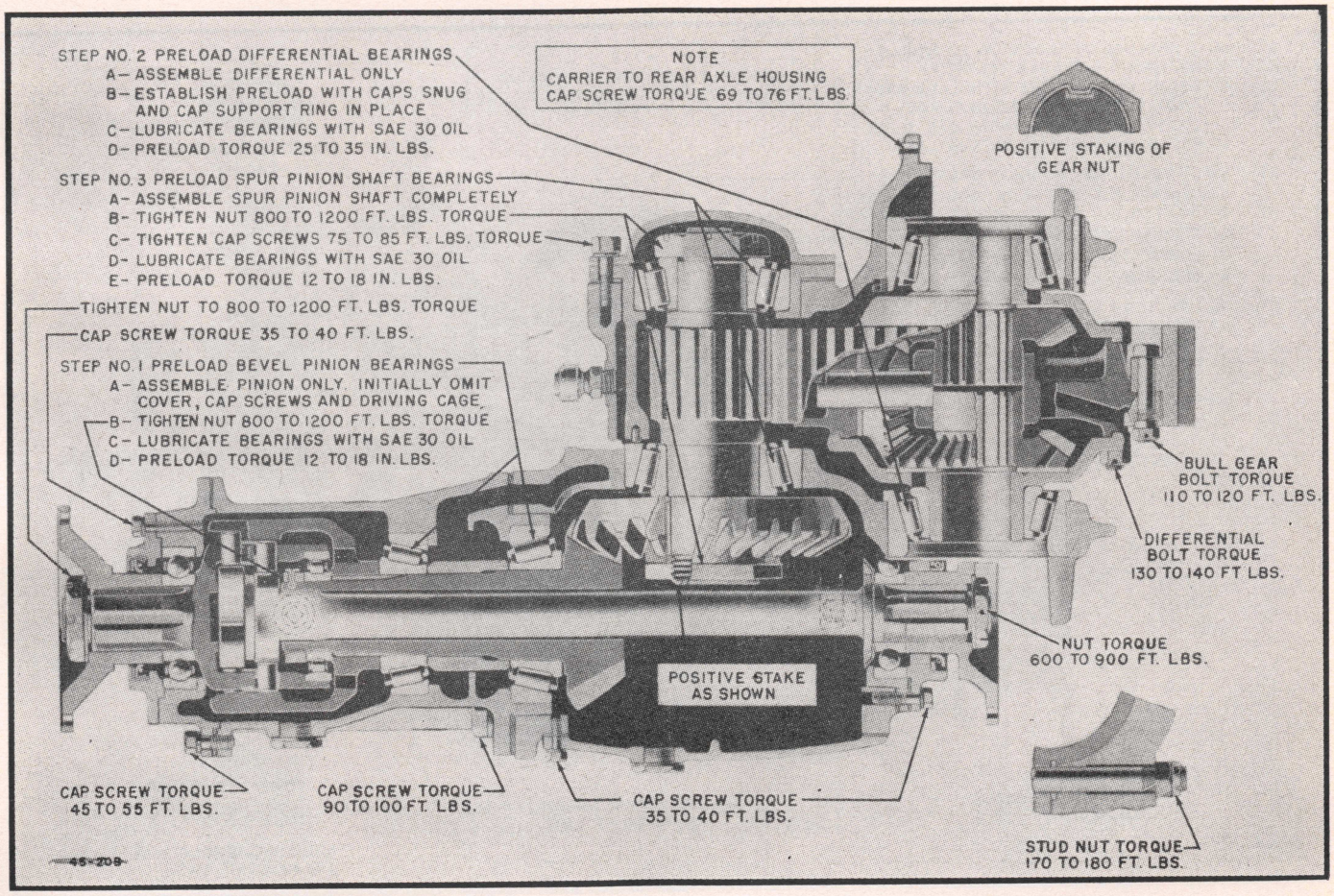

Fig. 8 Mack double-reduction forward carrier with power divider showing bearing preloads and screw torques

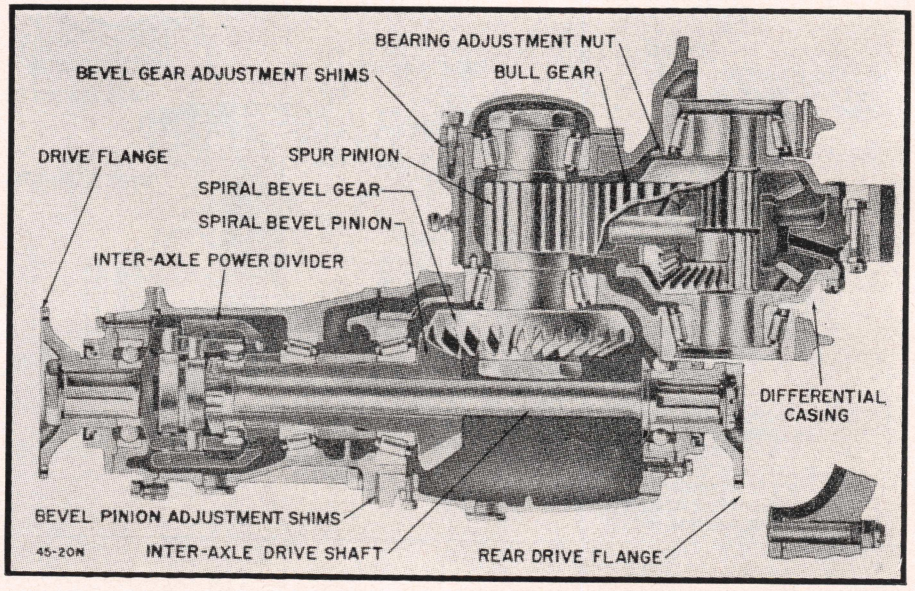

Fig. 7 Mack tandem double-reduction forward axle carrier with inter-axle power divider

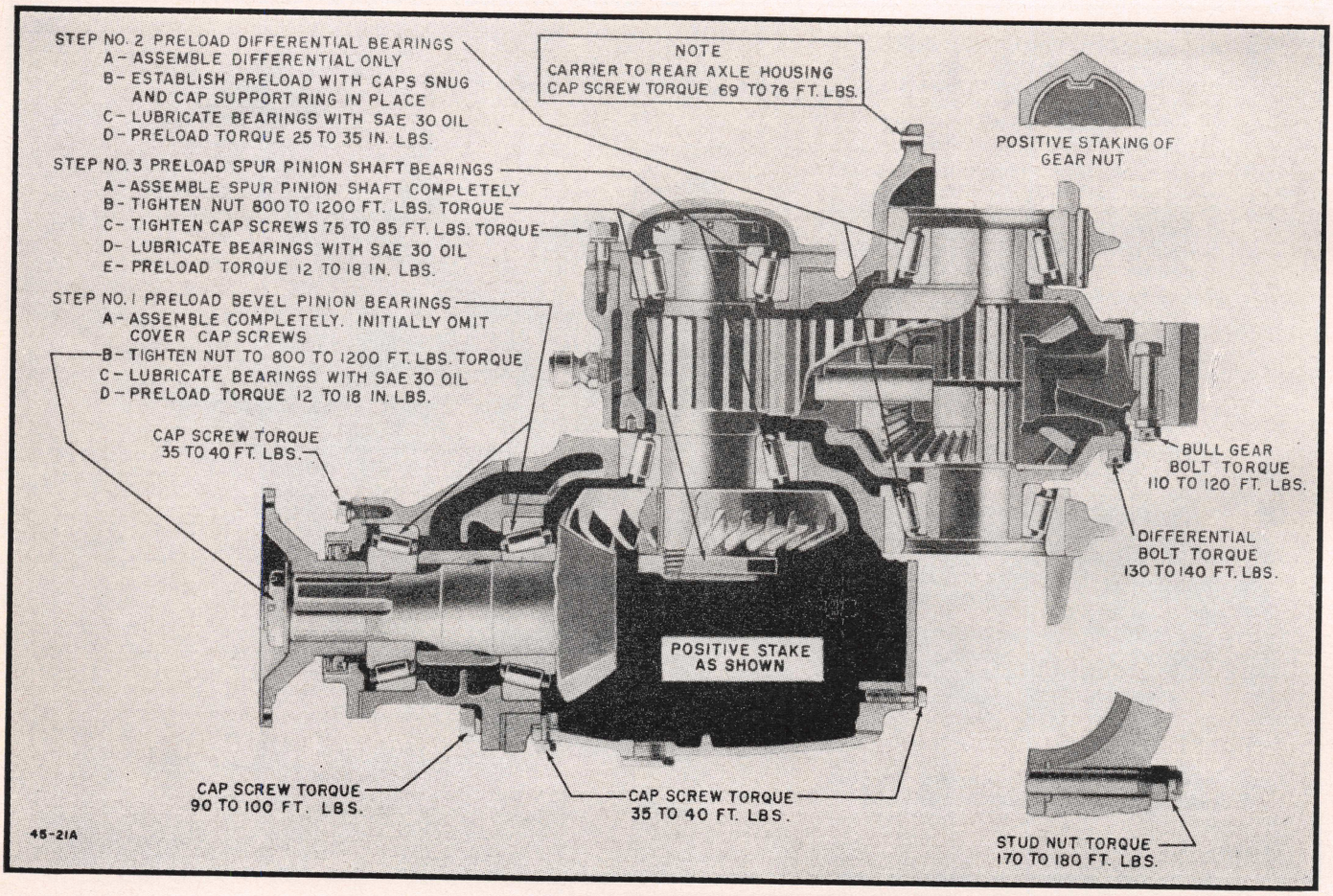

Fig. 9 Mack double-reduction rearward axle carrier showing bearing preloads and screw torques

Steering Gear Section

GEMMER STEERING GEAR

Worm & Roller Type, Fig. 1

This steering gear has an hour-glass shaped worm meshing with a three-toothed roller which is offset in its relation to the worm centerline. Made with integral cones the worm is attached to the steering column tube and held between tapered roller bearings. The upper bearing cup is pressed into the steering gear housing, whereas the lower cup has a slip fit to permit bearing adjustment. A shim pack between the worm cover and the housing provides for end play adjustment.

The roller shaft turns in two bronze bushings on the steering gear lever side, and in a straight roller bearing at the stub end. End thrust is controlled by a split washer which engages a groove close to the stub end of the shaft and adjustment is by means of a shim pack between the washer and cover hub. A yoke, integral with the shaft, embraces the roller which turns on two needle bearings, held between thrust washers. The shaft has a serrated end to engage the steering gear lever which is secured by a lockwasher and nut.

There is a self-adjusting, prepacked ball bearing near the upper end of the steering column tube.

Adjustments

Adjustment of the steering gear must be made in the sequence given below after disconnecting the gear from the linkage by removing the ball stud from the steering gear lever.

Gear Alignment

Loosen the steering gear housing stud nuts at the frame just enough to allow the housing to shift and line up at the angle determined by the steering column support bracket, and retighten the stud nuts. Loosen the capscrews at the steering column support bracket and allow the screws to shift in the bracket holes to match the gear column position, and retighten. This will correct any possible misalignment and must be performed before proceeding with the adjustments.

Worm End Play

Turn the steering wheel two turns to the right from the straight-ahead position and fasten it securely. Grip the jacket tube firmly just below the steering wheel hub, with the side of the finger barely touching the lower end of the hub. Then have a helper shake the steering gear hard; end play in the worm bearings will be felt at the wheel hub. Do not confuse side play in the jacket tube bearing with end play.

To remove end play, loosen the worm housing cover screws. Use a knife to remove one shim, taking care not to mutilate the remaining shims. Tighten the cover and check end play. Turn the

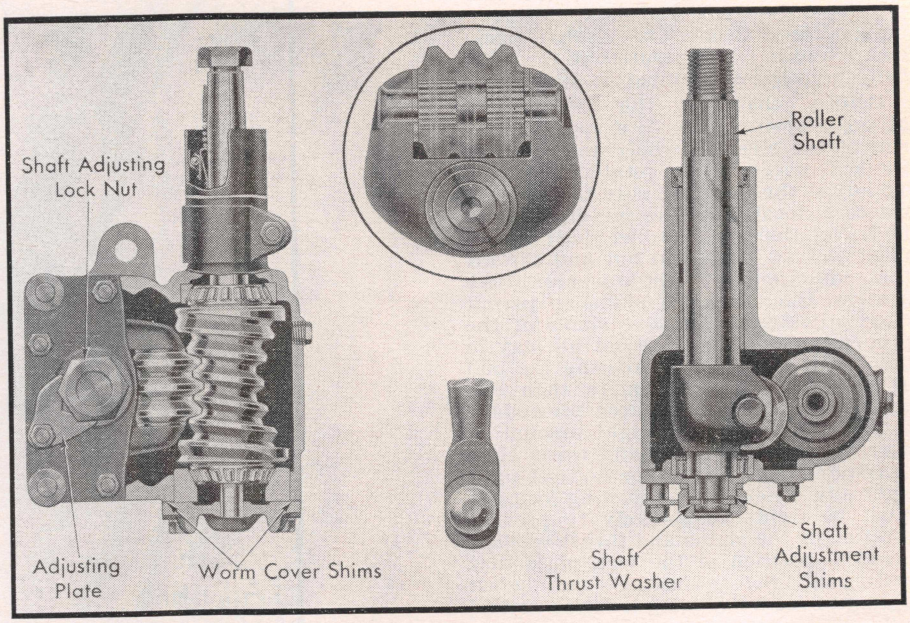

Fig. 1 Gemmer worm and roller steering gear

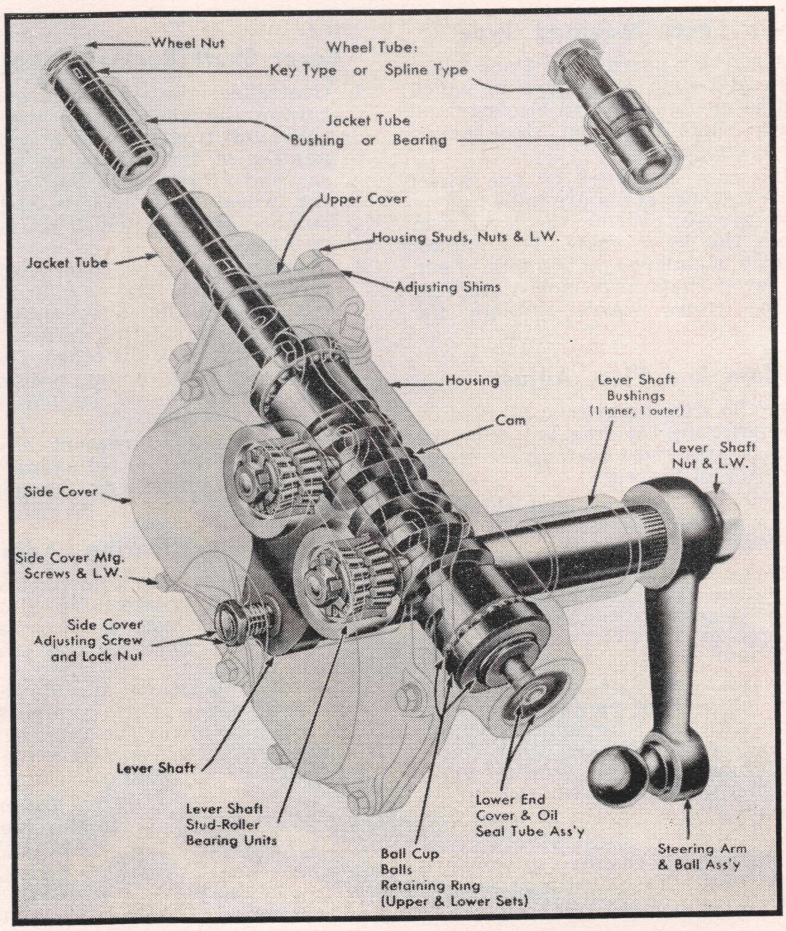

Fig. 2 Ross cam and lever steering gear with roller mounted twin studs

steering wheel to determine if any stiffness exists. Repeat until end play is removed and no stiffness exists.

Mesh Adjustment

Turn the steering wheel to the mid-position of its travel and shake the steering gear lever to check backlash. If backlash exceeds $\frac{1}{32}$", measured at the lever ball, the roller shaft must be adjusted.

Before changing the adjustment, attach a spring scale to a spoke at the rim of the steering wheel and measure the pull necessary to rotate the wheel. To adjust the mesh, be sure the steering wheel is located in the mid-position of its travel. Remove the roller shaft adjustment locknut plate and nut and slip off the semi-circular thrust washers. There are two thicknesses of shims to permit close adjustment. Remove shims of the proper thickness to take out all play in this position without increasing the pull at the steering wheel more than one pound over the pull required previously. It is better to have a slight amount of play between the roller and worm than to remove too many shims and set up a tight adjustment. The adjusting lock nut must be tightened securely to prevent rotation of the shims and thrust washer. Select a position of the lock plate that will lock the adjusting nut when tightened securely, using lockwasher and nut.

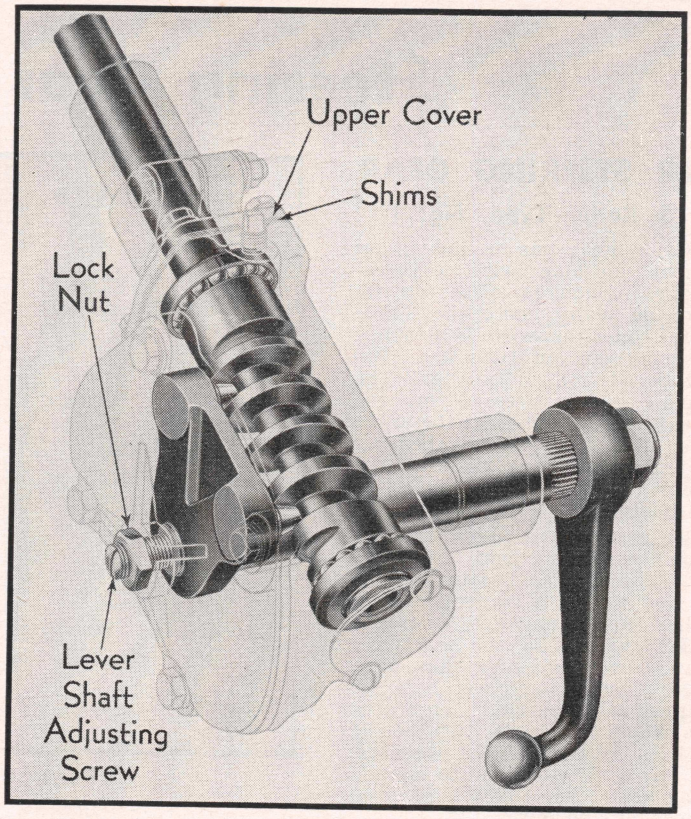

Fig. 3 Ross cam and lever steering gear with twin studs

ROSS GEAR

Twin Lever Mounted Type

These steering gears, Figs. 2 and 3, are the cam and twin lever type in which the cam is mounted on ball bearings and the lever shaft turns on steel-backed bronze bushings.

As the cam is turned by the wheel tube, the follower studs are pulled along the cam groove, causing the lever arm to rotate the lever shaft. The pitman arm, which is clamped on the splined end of the lever shaft and moves with it, turns the front wheels through the linkage.

Cam End Play, Adjust

1. Free the steering gear of all load by disconnecting the drag link from the pitman arm and loosening the steering column braces.
2. Loosen the lock nut and adjusting screw in the side cover to free the studs in the cam groove.
3. Remove the four upper cover stud nuts and raise the housing upper cover to permit removal of the adjusting shims, which are of .002", .003" and .010" thickness.
4. Clip and remove one thin adjusting shim and then tighten down the cover with the four nuts and check the adjustment. There shoud be a slight drag but the steering wheel should turn freely with the thumb and forefinger lightly gripping the rim.
5. If necessary, remove or replace shims until the adjustment is correct.

Lever Shaft Backlash, Adjust

1. Centralize the steering gear by turning the wheel all the way to the right and from this point count the number of turns required to reach the end of travel to the left. Turn the wheel back exactly half this number of turns which is the mid-position.
2. Tighten the side cover adjusting screw until a very slight drag is felt through the mid-position when turning the steering wheel slowly from one side to the other. *The gear must not bind in any position. A slight drag should be felt in the mid-position only.*
3. After proper adjustment has been made, tighten the adjusting screw lock nut and recheck the gear for binding.

Stud Roller Bearing, Adjust

In most cases the adjustments outlined above will be adequate. However, in some cases it may be necessary to adjust the stud roller bearing units in the lever shaft.

The roller bearings should be preloaded at all times. A heavy drag should be felt when revolving the studs by hand. If a torque wrench is available, the bearings should be adjusted as follows:

Lever Shaft Dia.	Torque to Revolve Stud
1⅜"	3-4 in. lb.
1½"	3-4 in. lb.
1⅝"	4-8 in. lb.
1¾"	5-11 in. lb.

1. With lever shaft removed from steering gear housing, wash the bearings in solvent and blow dry with compressed air, using care not to spin the bearings. Lubricate bearings with light oil.
2. Straighten out prong of locking washer to release stud nut. Remove nut and install new locking washer.
3. While holding stud from turning with a suitable spanner wrench on the locking washer, tighten the nut as required to bring it within the proper torque limits.
4. When proper adjustment has been secured, bend prong of washer against side of nut to keep it from turning.
5. Lubricate bearings with gear oil and assemble lever shaft in gear housing.

Column Alignment

After the steering gear has been reassembled and all adjustments completed, tighten the mounting bracket as well as the column upper bracket and braces. If necessary, renew the bushing in the column top bracket. The steering column must not be sprung in any direction, and any misalignment must be corrected or it will produce stiffness in the steering gear.

PERKINS DIESEL ENGINES

INDEX OF SERVICE OPERATIONS

PAGE NO.

ENGINE

Auxiliary Drive Gear, Install 865
Auxiliary Drive Shaft, Install 864
Camshaft, Install 863
Camshaft Gear, Install 863
Checking Fuel Injection Pump Timing 865
Connecting Rod Bushings, Install 866
Crankshaft 866
Crankshaft Pulley, Install 863
Crankshaft Rear Oil Seal 867
Crankshaft Thrust Washers 866
Cylinder Head 861
Cylinder Sleeves 866
Engine, Replace 861
Engine Specifications 859
Fuel Injection Pump 864
Fuel Injection Pump Timing 865
Fuel Pump Drive 864
Idler Gear and Hubs 864
Injection Pump Drive, Install 864
Main Bearings 866
Oil Pan 867
Oil Pump 867
Oil Pump Repairs 867
Piston Pin, Remove 865

PAGE NO.

Piston and Rod, Assemble 866
Piston and Rod, Install 866
Pistons and Rods, Remove 865
Piston Rings, Install 866
Push Rods 863
Rocker Arms 863
Timing 865
Timing Case and Camshaft 863
Timing Case, Install 863
Valve Lash, Adjust 861
Valve Lifters 863
Valves, Grind 862
Valve Guides 862
Valves, Remove 861
Valve Springs 862
Valve Timing 865
Water Pump, Replace 867
Water Pump Repairs 867

FUEL SYSTEM

Bleeding System 868
Fuel Injection Pump 869
Fuel Injection Pump, Remove 864
Fuel Injection Pump, Install 864
Fuel Injection Pump Timing 865

PAGE NO.

Fuel Injection Pump Repairs 870
Fuel Metering 870
Fuel Oil Filter, Replace 868
Fuel Pump Drive 864
Fuel Supply Pump 868
Injection Nozzles 870
Injection Nozzle Maintenance 870
Injection Nozzle Testing 870
Injection Nozzle Repairs 870
Maximum Fuel Adjustment 869

TROUBLE SHOOTING

Engine Bearing Failure 860
Engine Does Not Develop Full Power 860
Engine Fails to Turn Over 860
Engine Knocks 860
Engine Operates Unevenly or Vibrates 861
Engine Overheats 860
Engine Turns But Will Not Start 860
Excessive Lube Oil Consumption 860
Lack of Compression 860
Loss of Oil Pressure 860
Piston and Cylinder Wear 860
Smoky Exhaust 860
Valves Sticking 860

GENERAL SPECIFICATIONS

Engine Model	Bore & Stroke	Brake H.P. @ R.P.M.	Torque Ft. Lbs. @ R.P.M.	Firing Order	Compression Pressure Cranking Speed	Idle Speed No Load	Governed Speed		Oil Pan Capacity Refill Quarts
							No Load R.P.M.	Full Load R.P.M.	
D-354	3⅞ x 5	120 @ 2800	260 @ 1450	153624	430	525	3000	2800	14①

①—Add one quart with filter change.

VALVE SPECIFICATIONS

Engine Model	Valve Lash Hot	Valve Face Angle	Valve Stem Diameter		Valve Stem Clearance		Valve Guide Bore	Valve Springs		
			Intake	Exhaust	Intake	Exhaust		Free Length	Test Length	Test Pressure Lbs.
D-354	.010	45	.3725–.3735	.3720–.3730	.0015–.0035	.002–.004	.3750–.3760	...	①	①

①—Inner spring 1 9/16″ at 15 lbs., outer spring 1 25/32″ at 40 lbs.

PISTONS, PINS, RINGS, CRANKSHAFT & BEARINGS

Engine Model	Piston Clearance	Piston Pin Diameter	Ring End Gap① Minimum		Rod Bearings		Main Bearings			
			Compression	Oil	Shaft Diameter	Bearing Clearance	Shaft Diameter	Bearing Clearance	Thrust On Bear. No.	Shaft End Play
D-354	.0055	1.375	.015	.011	2.499–2.4995	.002–.004	2.9985–2.999	.0025–.0045	4	.006–.014

①—Fit rings in tapered bores for clearance listed in tightest portion of ring travel area.

ENGINE TIGHTENING SPECIFICATIONS★

★Torque specifications are for clean and lightly lubricated threads only. Dry or dirty threads produce increased friction which prevents accurate measurement of tightness.

Engine Model	Cyl. Head Ft. Lbs.	Exh. Man. Ft. Lbs.	Intake Man. Ft. Lbs.	Conn. Rod Ft. Lbs.	Main Bear. Cap. Ft. Lbs.	Flywheel to Crankshaft Ft. Lbs.	Crankshaft End Nut Ft. Lbs.	Camshaft End Nut Ft. Lbs.	Oil Pan Ft. Lbs.	Nozzle Body Bolts Ft. Lbs.
D-354	65	41–45	31–36	85–90	145–150	75	250	45–50	10	23–27

DESCRIPTION

This engine, Fig. 1, is a direct injection unit. Except for the fuel system, the engine is similar in construction to any conventional six cylinder overhead valve engine.

The fuel injection pump is of the distributor type, mounted vertically on the left side of the engine and driven through a worm gear from the auxiliary shaft.

The fuel pump incorporates an automatic advance and retard mechanism and the engine speed is controlled by a hydraulic governor incorporated in the fuel pump.

A fuel lift pump of the diaphragm type and equipped for hand priming is mounted on the cylinder block right side and is operated by an eccentric on the engine camshaft. The nozzles are located on the left side of the cylinder head.

TROUBLE SHOOTING

Engine Fails To Turn Over

1. Starting motor inoperative.
2. Faulty battery.
3. Faulty cables and terminals.
4. Starting switch defective.
5. Internal seizure.
6. Engine oil too heavy.

Engine Turns But Will Not Start

1. Fuel system faulty due to injection pump not operating properly or fuel lines clogged or air in lines.
2. Battery charge low; does not turn engine fast enough.
3. Air intake restricted or exhaust clogged.

Engine Does Not Develop Full Power

1. Moisture in fuel tank.
2. Fuel oil filter and strainer clogged.
3. Air cleaner clogged.
4. Insufficient fuel.
5. Poor fuel.
6. Injection pump not operating properly or not properly timed to engine.
7. Air leaks around intake manifold.
8. Exhaust restricted.
9. Lack of compression.
10. Air in fuel system.

Loss of Oil Pressure

1. Low lubricating oil level.
2. Clogged oil filter.
3. Oil leaks.
4. Engine oil pressure indicator or line defective.
5. Worn main, rod or camshaft bearings.
6. Dirt in oil filter relief valve or relief valve spring broken.
7. Oil pump worn.
8. Oil diluted or not as specified.
9. Defective cylinder head gasket.
10. Broken valve spring.

Lack of Compression

1. Valves sticking.
2. Worn pistons, rings and cylinder walls.

Smoky Exhaust

1. Engine overloaded.
2. Incorrect grade lubricating oil.
3. Worn valve guides, valve stems, pistons and sticky or worn oil control rings.
4. Air cleaner pipe clogged.
5. Improper fuel.
6. Defective injection nozzle.
7. Too much oil in air cleaner.
8. Incorrect valve adjustment.
9. Injection pump not properly timed.

Engine Overheats

1. Insufficient coolant in system.
2. Radiator cap loose.
3. Loose hose connections.
4. Fan belt slipping.
5. Cooling system clogged.
6. Dirt or trash on outside of radiator.
7. Lack of sufficient lubricating oil.
8. Engine overloaded.
9. Clogged oil filter.
10. Thermostat inoperative.
11. Water pump defective.
12. Engine oil diluted with fuel.

Excessive Lubricating Oil Consumption

1. Oil leaks.
2. Worn valve guides, piston rings, pistons and clogged oil control rings.
3. Incorrect grade of lubricating oil.
4. Overheated engine.
5. Excessive oil in crankcase.

Engine Knocks

1. One or more cylinders misfiring.
2. Loose connecting rod.
3. Poor grade of fuel or water in fuel.
4. Injection pump timed incorrectly.
5. Incorrect engine temperature.

Bearing Failure

1. Low oil pressure.
2. Lack of oil.
3. Engine runs too hot.
4. Loose bearings.
5. Improper lubricating oil.
6. Foreign materials entering engine.
7. Oil lines clogged.
8. Connecting rod bent.
9. Crankshaft out of alignment.

Valves Sticking

1. Valve springs weak or broken.
2. Gummy deposits from inferior fuel or oil.
3. Valve stems scored or carboned.
4. Insufficient clearance between valve stem and guide.

Piston & Cylinder Wear

1. Oil of unsuitable grade or viscosity.
2. Piston rings stuck or broken.
3. Foreign materials entering engine.
4. Piston rings not fitted properly to cylinder.
5. Dirty containers used for lubricating oil.

Engine Operates Unevenly or Vibrates

1. Valve and spring assembly inoperative.
2. Incorrect injection pump timing.

ENGINE, REPLACE

1. Remove air cleaner.
2. Disconnect fuel inlet line and fuel by-pass line from fuel injection pump.
3. Disconnect throttle control lever at pump.
4. Disconnect fuel shut-off control rod on pump.
5. Disconnect exhaust pipe at manifold.
6. Disconnect wiring harness from generator, starter, temperature sending unit and oil pressure sending unit.
7. Remove vacuum line from vacuum pump (if equipped).
8. Remove tachometer drive cable.
9. Disconnect engine ground strap.
10. Attach a suitable sling to the engine and position hoist for supporting engine.
11. Disconnect engine mountings and detach bell housing from flywheel housing.
12. Pull engine forward slightly to clear transmission and lift from chassis.
13. Reverse removal procedure to install.

CYLINDER HEAD

Removal

1. Remove fuel filter complete with pipes.
2. Remove breather pipe.
3. Take off cylinder head cover.
4. Remove rocker arm shaft assembly.
5. Remove push rods.
6. Remove nozzle leak off pipes.
7. Remove pressure pipes to nozzle.
8. Remove nozzles.
9. Unfasten and remove cylinder head complete with intake and exhaust manifolds.

Installation

1. Before installing the cylinder head, it is extremely important to be certain that the cylinder block and head machined surfaces are perfectly clean.
2. Care must be taken to make sure that the rocker arm shaft oil feed passage, Fig. 2, is not obstructed.
3. Use a new gasket when replacing head. Cover both sides with a thin coating of sealing compound. The gasket is marked "Top" and "Front" on the right-hand corner to indicate how it should be installed.
4. When head is installed, tighten stud nuts to the torque specified in the Engine Tightening Table and in the order shown in Fig. 3.
5. With push rods in position, replace rocker arm shaft assembly. Be sure that rubber sealing ring is correctly positioned on the oil pipe before tightening rocker arm assembly.
6. Install nozzles, leak-off pipes and attach pressure pipes to nozzles.

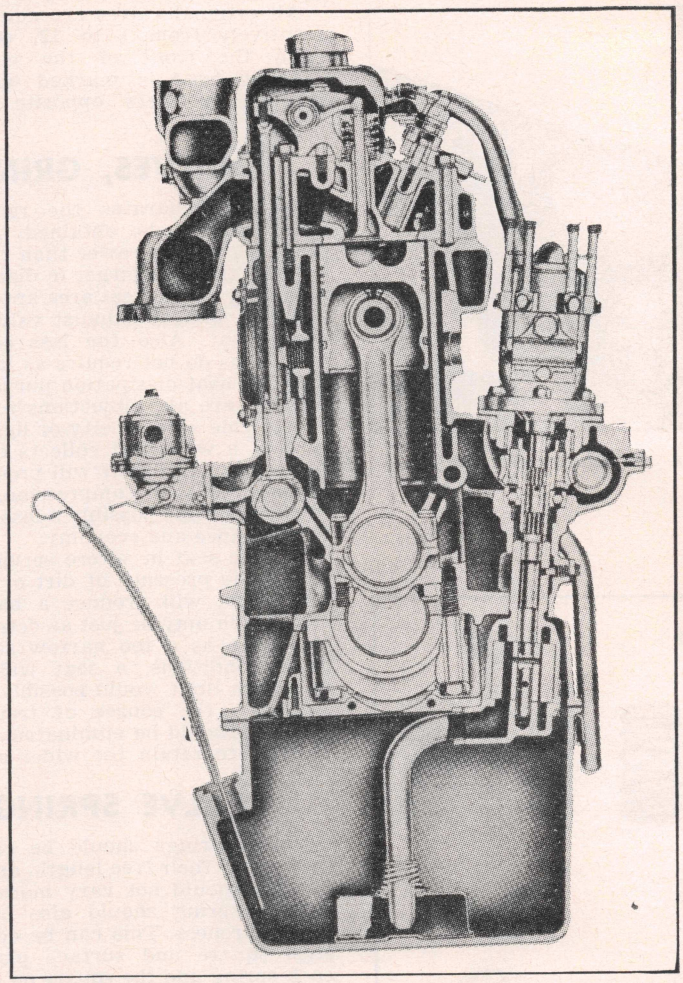

Fig. 1 Sectional view of Perkins D-354 engine

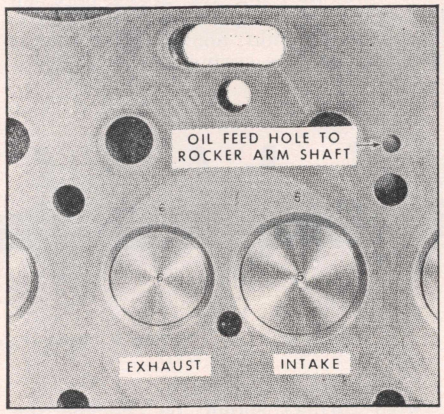

Fig. 2 Be sure oil feed hole indicated is unobstructed

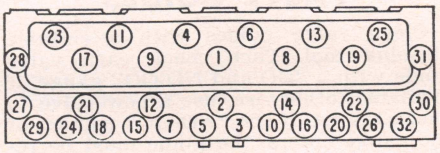

Fig. 3 Cylinder head tightening sequence

VALVE LASH, ADJUST

When adjusting valve clearance, the engine should be turned to bring the respective piston to TDC on the compression stroke.

To adjust, loosen the lock nut and, with a feeler gauge between the top of the valve stem and rocker arm face, Fig. 4, turn the adjusting screw with a screwdriver until the correct clearance is obtained. Tighten lock nut. *Valve clearance should be set hot to the clearance given in the Valve Table.*

After warming up the engine, it should be shut down and the cylinder head nuts again tightened to the specified torque and in the order shown in Fig. 3. After tightening the nuts, recheck valve clearance and reset as required.

Replace cylinder head cover, using a new gasket and being sure it is positioned properly.

VALVES, REMOVE

Referring to Fig. 5, compress the spring caps and springs with a valve spring compressor and remove valve keys. Remove spring caps, springs and oil deflectors from intake valve stems. Turn the cylinder head upside down and remove the valves.

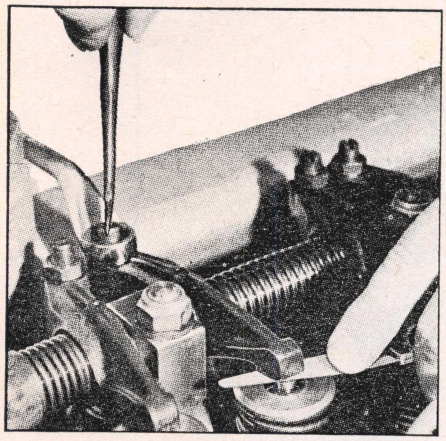

Fig. 4 Adjusting valve lash

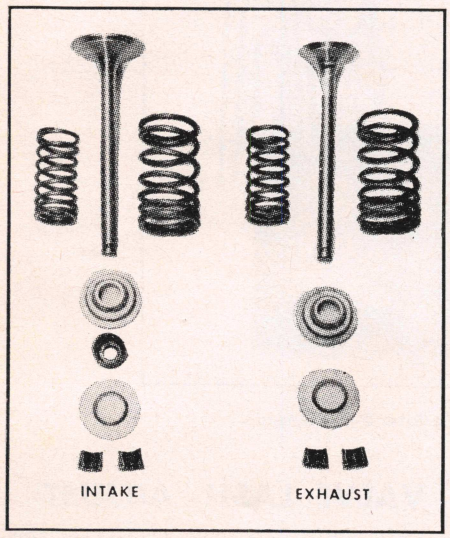

Fig. 5 Valve components

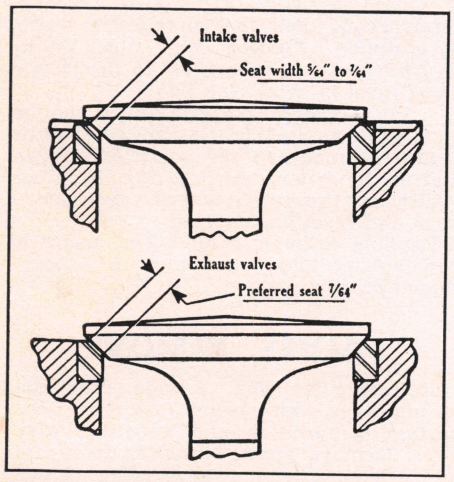

Fig. 6 Recommended valve seat widths

All original valves are numbered consecutively from 1 to 12, commencing from the front of the engine. The cylinder head is marked with corresponding numbers opposite the valve seats.

VALVES, GRIND

Fig. 6 illustrates the recommended valve seats to be obtained. The intake seats may be narrower than the exhaust because they are larger in diameter, thus providing a total seat area approximately equal to smaller exhaust valve with the wider seat. Also the less severe heat conditions do not require as large a seat area for heat dissipation purposes.

There are also objections to an excessively wide seat. In city or light delivery service, a wide seat collects carbon and particles of dirt that will produce variations or loss of compression, resulting in poor idle and possibly a loss of general performance and economy.

A wide seat in severe service, operating in the presence of dirt or an excess of carbon, will produce a badly pitted seat which may be just as detrimental to valve life as a too narrow seat. Under these conditions, a seat width to the minimum limit would possibly be better. However, the source of trouble (dirt, carbon) should be eliminated, making it possible to retain the wider seat.

VALVE SPRINGS

Valve springs should be checked by measuring their free length, and the uniformity should not vary more than $\frac{1}{16}$".

Each spring should also be checked for squareness. This can be done with a steel square and surface plate. Stand each spring and the square on end on the surface plate and slide the spring up to the straight edge of the square. Then gradually revolve the spring, while at the same time noticing the space between the top coil of the spring and the square. This space should not exceed $\frac{1}{16}$"; if more, replace the spring.

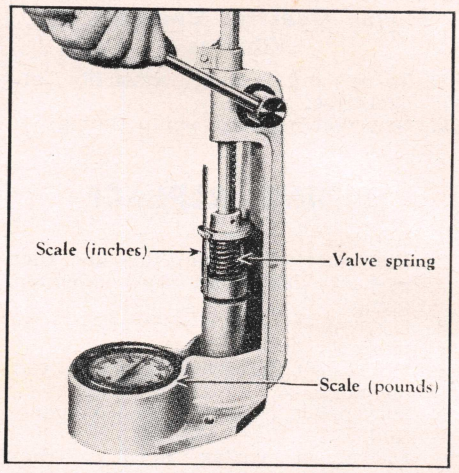

Fig. 7 Testing valve springs

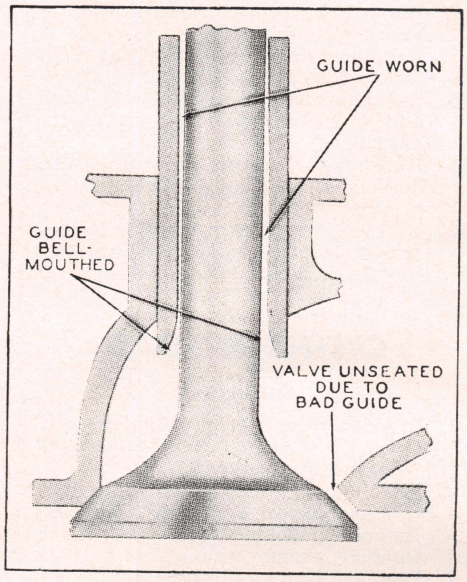

Fig. 8 Incorrect valve guide installation

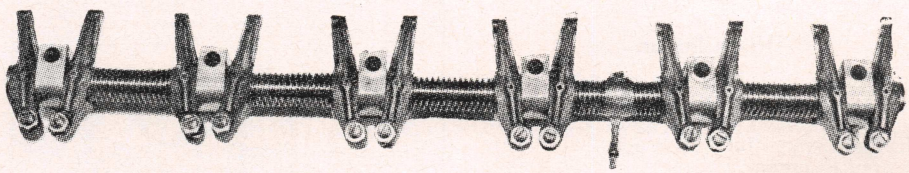

Fig. 9 Rocker arm shaft assembly

Valve springs should be checked for tension with a spring tester, Fig. 7. Any spring that does not conform to the specifications listed in the chart within 10% should be replaced.

VALVE GUIDES

Clean valve guides with a suitable cleaning tool. Then check each valve guide with a "GO and NO-GO" gauge, if available; otherwise, use a new valve to check the fit. If the "NO-GO" portion of the gauge enters, the guide must be replaced.

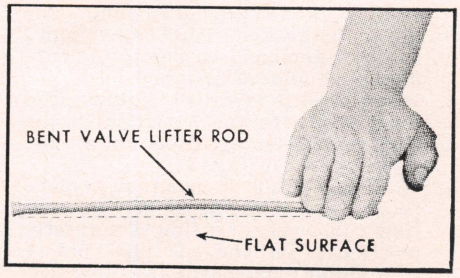

Fig. 10 Checking push rods

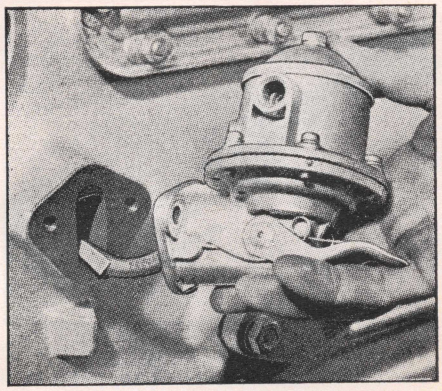

Fig. 11 Removing fuel supply pump

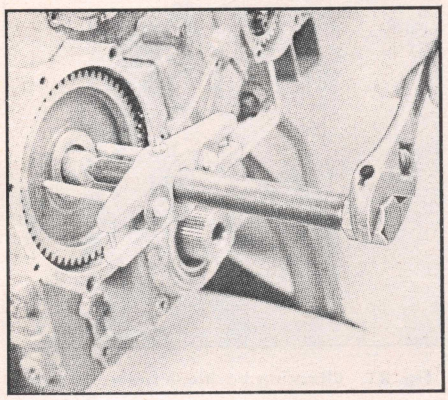

Fig. 12 Removing camshaft gear

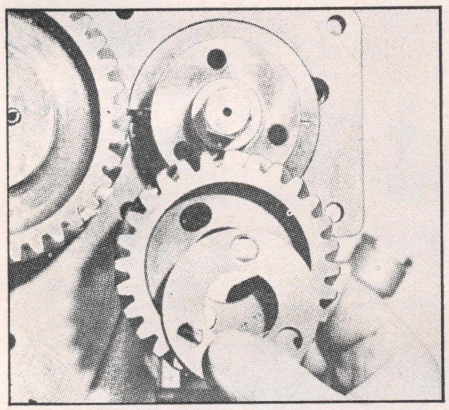

Fig. 13 Removing fuel injection pump drive gear

Clearance in excess of .006″ for intake valves and .008″ for exhaust valves, calls for replacement of valve guides, Fig. 8.

New guides should be installed so that the distance from the cylinder head to the top of the guide is ⅝″.

ROCKER ARMS

Wash rocker arm assembly thoroughly in solvent. Examine the rocker arms for wear. They should be an easy fit on the shaft without excessive side play. Should it be necessary to disassemble, reassemble as shown in Fig. 9.

PUSH RODS

Examine push rods for straightness by placing them on a flat surface and turning them as illustrated in Fig. 10. Bent push rods should be discarded and replaced with new ones.

VALVE LIFTERS

Valve lifters are of the mushroom type operating in guide holes bored in the cylinder block. To remove the lifters, therefore, it is necessary to take out the camshaft and remove the lifters through the bottom of the engine.

TIMING CASE & CAMSHAFT

Removal

1. Remove rocker arm assembly.
2. Remove inlet and outlet connections to fuel supply pump.
3. Remove fuel supply pump, Fig. 11.
4. Remove valve lifter inspection covers and withdraw push rod.
5. Remove crankshaft pulley.
6. Remove fuel injection pump gear cover and camshaft gear cover from timing case.
7. Remove camshaft gear, Fig. 12.
8. Remove fuel injection pump drive gear by unscrewing three bolts, Fig. 13.
9. Remove timing case.
10. Raise valve lifters and withdraw camshaft and thrust washers. If engine is removed from vehicle, it is advisable to turn it on its side or upside down to prevent valve lifters from falling out of their bores.
11. When camshaft has been withdrawn, remove valve lifters from bottom of engine if necessary.

Camshaft, Install

1. Raise valve lifters to be sure that they will clear the cams and carefully slide the camshaft into the engine.
2. Install the thrust washer into the machined recess in the front of the cylinder block and locate it on the dowel.

Timing Case, Install

1. The thrust washers on the camshaft and auxiliary drive shaft are sandwiched between the timing case rear face and the front face of the cylinder block. Care should be taken to see that they are not misplaced before installing the timing case.
2. Using a new gasket between timing case and cylinder block, place timing case in position and secure it to the cylinder block.

Camshaft Gear, Install

1. Turn engine over to bring Nos. 1 and 6 cylinders at top dead center.
2. Align keyway in camshaft gear with key in camshaft.
3. Align tooth on camshaft gear with the single dot between the teeth on the idler gear marked with a double dot.

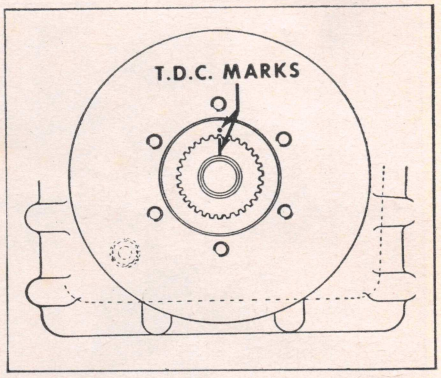

Fig. 14 T.D.C. marks on crankshaft and pulley

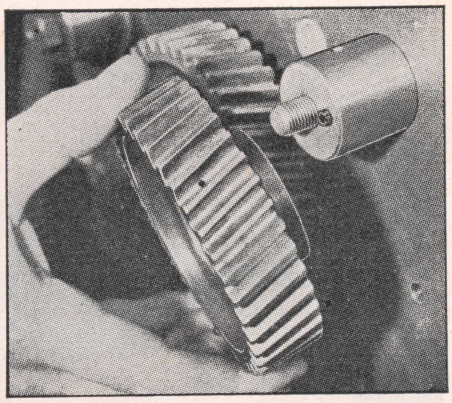

Fig. 15 Removing idler gear

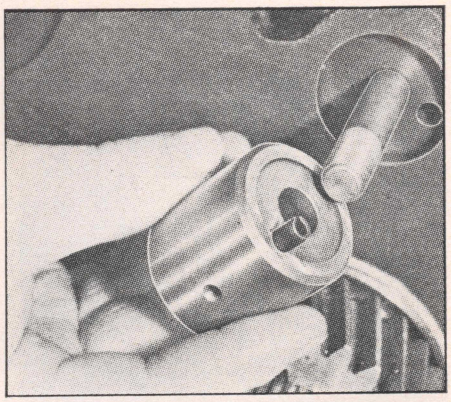

Fig. 16 Installing idler gear hub

4. Draw the gear onto the camshaft by using a heavy flat washer and a bolt.
5. Secure gear to camshaft by installing the retaining washer, tab washer and bolt.

Crankshaft Pulley, Install

1. Place camshaft gear cover on timing case.
2. Install pulley on crankshaft in such a position that the dot on the front face of the pulley aligns with the "V" groove on the end of the crankshaft, Fig. 14.

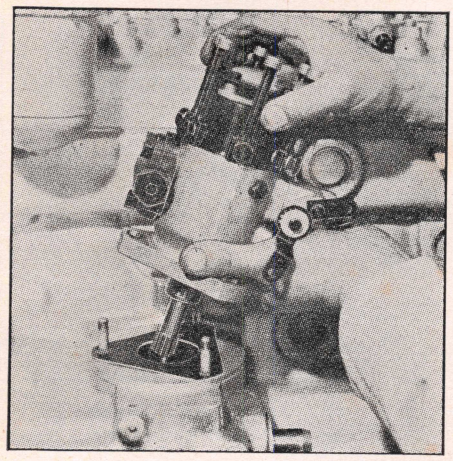

Fig. 17 Removing fuel injection pump

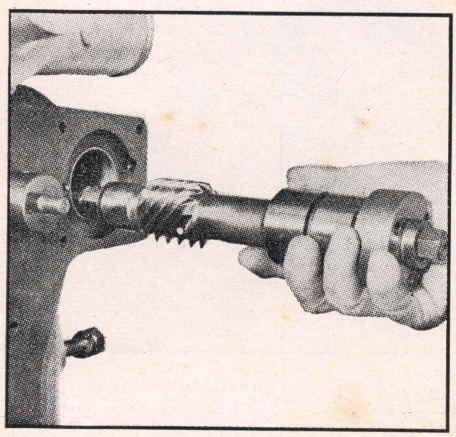

Fig. 18 Removing auxiliary drive shaft

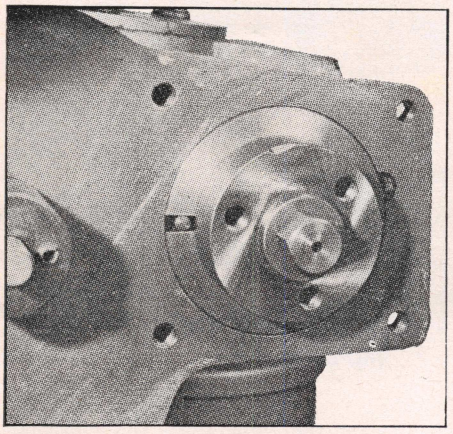

Fig. 19 Auxiliary drive shaft thrust washer

IDLER GEARS & HUBS

The idler gear hubs are fitted in the front face of the cylinder block and can be removed by first unscrewing the self-locking nuts and withdrawing the idler gears, Fig. 15. The hubs can then be removed by lightly tapping and pulling them at the same time.

When replacing the idler gear hubs, it is important that the recessed ends be installed toward the cylinder block and located by the hollow dowels which also serve as the oil feed, Fig. 16.

After the hubs have been placed in position, turn the crankshaft until Nos. 1 and 6 pistons are at top dead center and place the idler gears on their respective hubs. *Be sure that the double dot timing mark on the idler gear to the camshaft coincides with the single dot timing mark on the crankshaft gear.*

FUEL INJECTION PUMP

Removal

1. Remove fuel injection pump lines connecting pump to nozzles.
2. Disconnect low pressure fuel pipes.
3. Cover fuel injection pump ports with suitable caps to keep out dirt.
4. Disconnect all fuel injection pump controls.
5. Unfasten and withdraw pump, Fig. 17.

Installation

1. Fit fuel injection pump gasket to pump mounting face.
2. Align master spline on pump shaft with master spline on vertical drive, and the scribed line on pump mounting flange with scribed line on adapter plate.
3. Secure pump to adapter plate and install fuel pipes.

FUEL PUMP DRIVE

Removal

1. Remove timing case.
2. Remove fuel injection pump.
3. Withdraw drive shaft and two half moon shaped thrust washers, Figs. 18 and 19.
4. Remove fuel injection pump adapter plate.
5. Remove oil pan and lube oil pump.
6. Tap out fuel injection pump vertical drive shaft from inside of crankcase.

Injection Pump Drive Gears, Install

When the injection pump drive has been removed, it should be examined and damaged or worn parts replaced. If the bronze gear requires replacing, it can be removed from the shaft by first removing the ball bearing, then pulling off the gear after releasing the four set screws, Fig. 20. The new gear can then be pushed on the shaft and secured by the set screws and the ball bearing replaced.

Injection Pump Drive, Install

1. Install vertical injection pump drive by inserting the ball race end of the assembly into the housing in the cylinder block and pressing into position.
2. Install injection pump adapter plate. *It is important when installing the plate that the scribed line on the edge of the plate is adjacent to the outside fuel pump attaching stud.*
3. Install lubricating oil pump and pan.

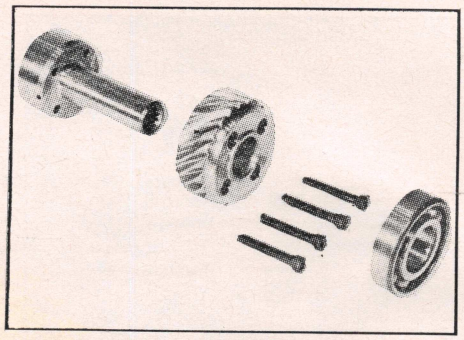

Fig. 20 Fuel injection pump drive shaft parts

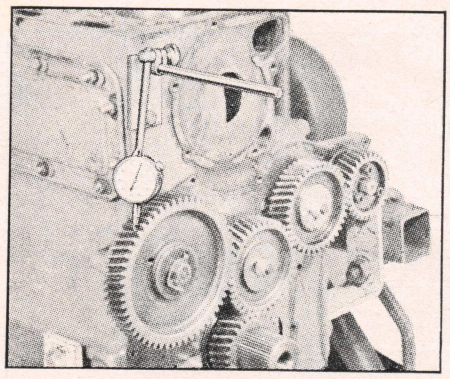

Fig. 21 Checking backlash between gears

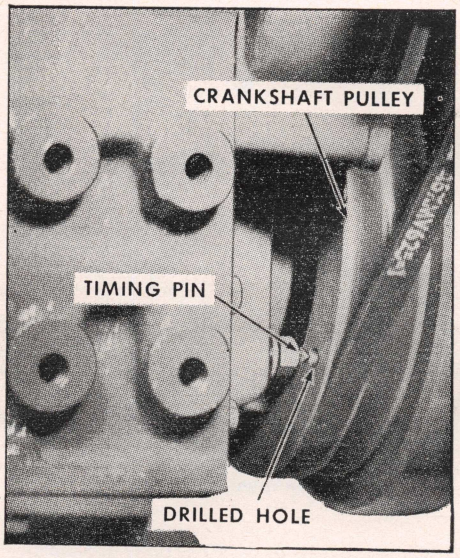

Fig. 22 Fuel injection pump timing pin location

AUXILIARY DRIVE SHAFT, INSTALL

1. Install the two half moon shaped thrust washers in the annular groove immediately behind the timing gear mounting flange on the auxiliary drive shaft.

2. Slide the shaft into the cylinder block, being careful not to damage either of the gears, until the two halves of the washer seat in the recess machined in the cylinder block and the end faces are located against the dowel, Fig. 19.

AUXILIARY DRIVE GEAR, INSTALL

1. Set engine crankshaft at top dead center on Nos. 1 and 6 cylinders, No. 1 being the compression stroke.
2. Turn the auxiliary drive shaft with a spanner wrench on the hex portion until the vertical slot in the injection pump drive hub coincides with the slot in the pump adapter plate.
3. With the engine set as described above, install the auxiliary drive gear and secure with retaining plate and bolts.
4. Install auxiliary drive gear cover.
5. Check backlash between all gears, Fig. 21. should be .003 to .006".

TIMING

As timing gears are employed on this engine, the factory setting remains constant. The resetting or checking of the timing can easily be carried out if the following instructions are kept in mind. *The removal of the cylinder head does not in any way affect the timing of the engine.*

Establishing T.D.C.

Top Dead Center for Nos. 1 and 6 cylinders may be established either by viewing the T.D.C. mark on the flywheel through the inspection hole provided in the flywheel housing or by removing the crankshaft nut washer and ensuring that the "V" groove on the front face of the crankshaft is vertical, Fig. 14.

To check or reset fuel injection pump timing, a timing pin is provided in the lower half of the timing case, arranged to locate in a drilled hole in the rear face of the crankshaft pulley, Fig. 22.

To establish T.D.C. on Nos. 1 and 6 cylinders, turn engine crankshaft in normal direction of rotation and unscrew the timing pin until it locates in the drilled hole in the rear face of the crankshaft pulley. *Under no circumstances should an attempt be made to turn the engine when the timing pin is engaged in the pulley or damage may result.*

Valve Timing

When the valve timing is set at the factory, certain marks are stamped on the timing gears, Fig. 23, so that the original setting may be obtained should the timing be disturbed for any reason.

There is no adjustment for valve timing. Should the timing be found to be incorrect, the gears can only be one or more teeth out of correct alignment.

Fuel Injection Pump Timing

When the fuel injection pump is removed, a machined slot will be noted in the hub of the worm gear on the pump shaft and a slot approximately 1/8" wide in the adapter plate will also be seen, Fig. 24.

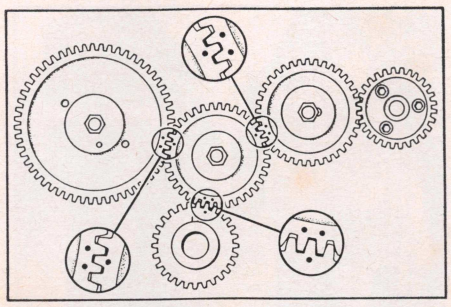

Fig. 23 Timing marks on drive gears

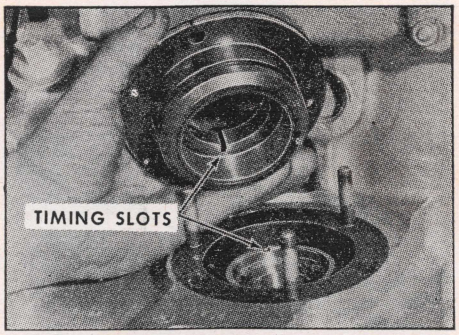

Fig. 24 Timing slot on fuel injection pump adapter plate and drive hub

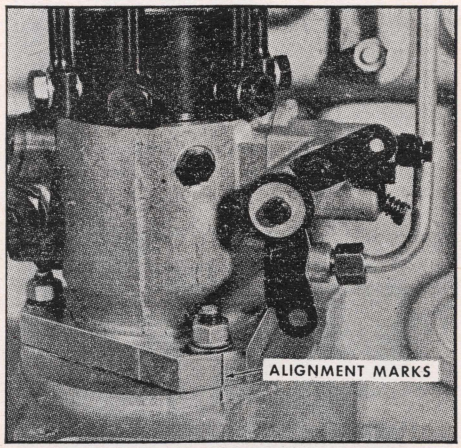

Fig. 25 Alignment marks on fuel injection pump and adapter plate

With these slots in alignment, and the crankshaft set at T.D.C. with No. 1 cylinder on the compression stroke, the fuel injection pump should be installed with the scribed line on its mounting flange coinciding with the line on the pump adapter plate, Fig. 25. Should the machined slots not be in alignment, adjustment may be made as follows:

1. Turn engine crankshaft in the normal direction of rotation until No. 1 cylinder is at T.D.C. on compression.
2. Remove auxiliary drive gear cover on timing case.
3. Remove three securing bolts and auxiliary drive gear.
4. Turn auxiliary drive shaft until the machined slots are in alignment.
5. Install auxiliary drive gear and secure in position, being sure that the drive shaft does not move during this operation.
6. Install drive gear cover on timing case.

Checking Fuel Injection Pump Timing

1. Remove pump inspection plate to expose the rotor.
2. Turn engine crankshaft in normal direction of rotation until scribed line marked "H" on pump rotor coincides with scribed line on snap ring, Fig. 26.
3. Check that the static timing on No. 1 cylinder is 29 degrees B.T.D.C. by measuring the appropriate distance on the flywheel rim (4.02") or by measuring the piston depth from T.D.C. which should be .399".
4. The three holes in the pump mounting flange are slotted for pump timing adjustment. This may be accomplished by releasing the securing nuts and turning the pump in the desired direction.

PISTONS & RODS

Removal

1. Remove cylinder head assembly.
2. Remove oil pan.
3. Turn engine crankshaft until two rod bearings are at bottom center, then remove self-locking nuts.
4. Remove caps, bearing shells and rod bolts.
5. Carbon ridges at top of cylinder bores should be removed before attempting to remove pistons.
6. Push pistons and rods out of top of cylinders.
7. Turn engine crankshaft until next two rods are at bottom center and repeat removal operation. Further turn crankshaft and remove the two remaining pistons and rods in like manner.
8. Pistons are numbered 1 to 6 beginning with No. 1 at front of engine. Rods and caps are also numbered to indicate the cylinder to which each is fitted.

Piston Pin Removal

1. Using internal snap ring pliers,

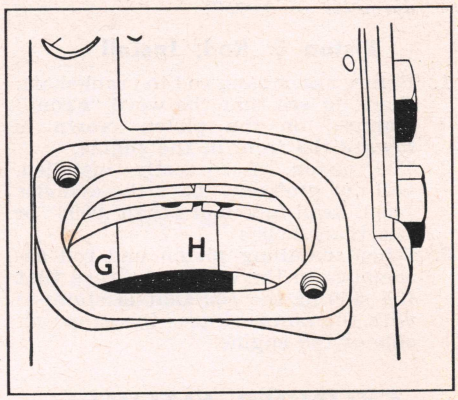

Fig. 26 Alignment marks on fuel injection pump rotor

remove rings from pistons.
2. The pins can then be pushed out if the pistons are heated in clean water to a temperature of 100 to 120 degrees F.

Connecting Rod Bushings

The bushings are a press fit in the rod. Use suitable tool to press out old bushing. Remove any sharp edges around bushing rod bore. Press in new bushing, being certain that oil hole in bushing coincides with hole in rod. Ream out new bushing to suit pin size being installed.

Piston & Rod, Assemble

Heat piston in clean water to a temperature of 100 to 120 degrees F. Then with the stamped mark "Front" on the piston crown facing toward you, place the rod in position, taking care to note that the number on the rod is to the left-hand side. Insert pin in position and install snap ring, making sure that it fits securely in piston groove.

If the original pistons are being re-used, they must be assembled to the same connecting rod: Piston marked "1" must go with rod marked "1", and so on. Use new snap rings even if the old ones appear not to be damaged or strained.

Piston Rings, Install

1. Wash rings to remove any grease or oil that may be present.
2. Check rings for correct end gap which must be the minimum limit listed in the specification table.
3. Install the new rings as directed in the container in which the rings are packed.
4. Rings must be arranged so that their gaps are equally spaced around the piston and not in line with one another.
5. When installing new rings to original pistons, clean out piston ring grooves, using an old ring from the appropriate groove for the purpose.
6. Examine piston skirt and if there is any scoring the piston must be discarded.
7. The piston must be examined carefully for damage to the ring grooves and to be sure that the rings move freely when installed.
8. *When installing new rings to worn cylinder sleeves, the ring gaps should be checked at a cylinder bore diameter of 3.875".*

Piston & Rod, Install

1. Before assembling rod to crankshaft, check to see that the word "Front" stamped on the piston crown is toward the front of the engine.
2. The piston, if correctly installed, will not protrude above the cylinder block head face more than .0096" or less than .0028".
3. When installing piston and rod assemblies in the engine, be sure that the side of the rod that is stamped with the number faces the camshaft side of the engine.

CYLINDER SLEEVES

The cylinder block contains renewable cast iron dry sleeves. Replacement sleeves are supplied unbored and must therefore be bored and honed to the finished dimensions after installation.

As the efficient running of a diesel engine is particularly dependent on good compression, the engine should be re-sleeved or re-bored to .030" oversize when the cylinder bores are worn to such an extent that engine performance is affected.

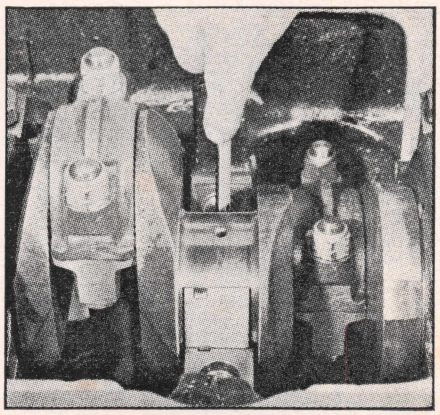

Fig. 27 Removing upper half of main bearing

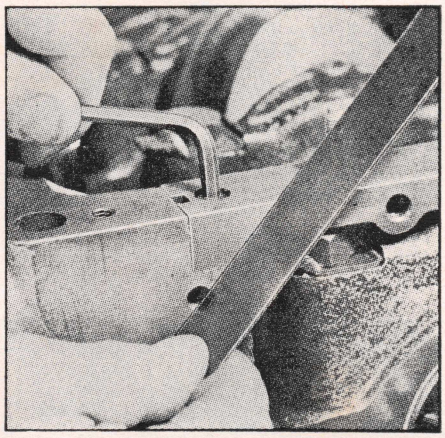

Fig. 28 Aligning bridge to cylinder block face

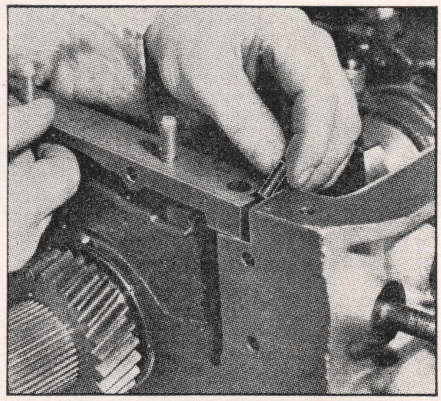

Fig. 29 Installing bridge piece oil seals

Each cylinder bore should be checked with an inside-reading micrometer to determine taper, out-of-round or worn condition. If the bore wear does not exceed the limits of .002" out-of-round and .005" taper, new standard size service piston rings will give satisfactory performance provided the piston clearance is not excessive.

However, if the wear exceeds the limits, it is recommended that new sleeves be installed. Bore the new sleeves to approximately .003" of the required oversize diameter. This will allow enough stock for the final step of honing the bores so that the exact clearance may be obtained for the piston.

CRANKSHAFT & MAIN BEARINGS

Under normal circumstances, by the time the main bearings and thrust washers require replacing, the crankshaft will need to be removed for regrinding. However, if for any reason one or more bearings or thrust washers have to be replaced or removed for inspection, this can be accomplished without removing the crankshaft from engine.

1. To remove a main bearing, take off the cap of the bearing in question. *Where Nos. 1 and 7 main bearing caps are concerned, it is necessary to remove the front and rear main bearing bridge or filler block pieces before the bearing caps can be removed. The front bridge piece is secured to the block by two recessed slotted round-head capscrews, and the two lower timing case attaching bolts. The rear bridge is secured to the cylinder block by two recessed slotted round-head capscrews and the two lower rear main bearing oil seal housing attaching bolts.*
2. Do not remove more than one bearing cap at a time.
3. Loosen the remaining bearing cap bolts one or two turns.
4. Remove lower half of bearing from cap.
5. With a thin piece of wood, push out top half of bearing by rotating it on crankshaft, applying the tool to the opposite side of the bearing lip, Fig. 27. *Note that the locating lips on the bearing are on the camshaft side of the engine.*
6. Insert a new bearing half in the top, inserting the plain end first. Install new bearing half in cap.
7. Replace cap and tighten bolts lightly before proceeding with the next bearing.
8. Having replaced the bearings and caps, tighten the bolts to the torque specified in the Specifications table. Then lock with tab washers.
9. If the front and rear bridge pieces have been removed, lightly coat the metal-to-metal faces with sealing compound and refit them, ensuring that they are correctly aligned with the block face, Fig. 28. Install bridge piece oil seals, Fig. 29.

Crankshaft Thrust Washers

1. The thrust washers fit in recesses provided on either side of the center

main bearing housing and cap, Fig. 30. To renew them, remove center bearing cap.
2. Remove two bottom half washers from cap.
3. The two top half washers can be removed by sliding them around from one side with a piece of wood and rotating them until they can be removed.
4. To install new thrust washers, lightly coat the two upper halves with engine oil and slide them into the recesses provided. The steel side of the washers should be towards bearing housing.
5. Place the two lower halves on either side of bearing cap and replace cap.
6. Torque bearing caps to specifications.
7. Check crankshaft end play as shown in Fig. 31. End play should be within the limits listed in the Specifications table.

CRANKSHAFT REAR OIL SEAL

The oil seal housing consists of two halves bolted around the rear of the crankshaft. It has a spiral oil return groove recessed to a depth of .004 to .008″. The bore of the housing is machined to accommodate a rubber cored asbestos strip. The strip consists of two sections, one for each half of the oil seal housing. When installing the seal with the crankshaft in position, proceed as follows:

1. Place one half of housing in a vise with the seal recess uppermost.
2. Install seal in groove, leaving about 1″ of seal extending at each end. Be sure that each end of strip projects .010 to .020″ beyond half housing joint face. Allow middle of seal to bulge out of groove during this operation.
3. With thumb or finger, press remainder of strip into groove, working from the center. Then use any convenient round bar to further position the strip by rolling and pressing its inner diameter. This procedure takes advantage of the friction between the strip and the groove at the ends to compress the rope while being certain that the projections of the end faces of the rope remain as set.
4. Remove all traces of old gasket from cylinder block rear face and install a new gasket coated lightly with a suitable gasket compound.
5. Lightly paint the faces of the housing with a non-hardening gasket compound.
6. Spread a film of graphited grease over the exposed inside diameter surface of the seal face.
7. Assemble the half housing around the crankshaft rear journal and fasten together by two bolts.
8. Rotate complete seal housing on the shaft to position the strips, and to establish that the assembly turns easily on the shaft.
9. Bolt the seal housing in position on the block and rear main bearing cap bridge piece and tighten.

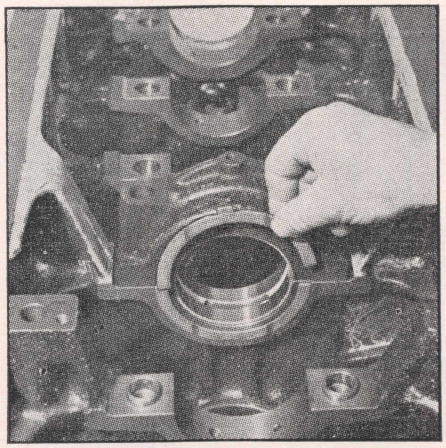

Fig. 30 Location of crankshaft thrust washers

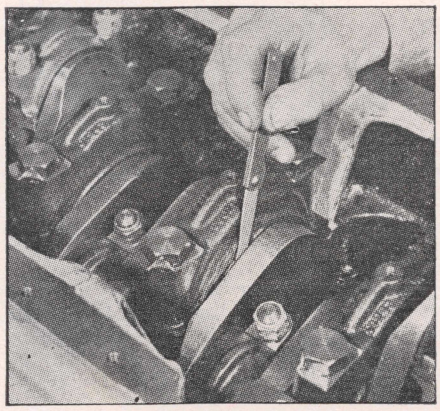

Fig. 31 Checking crankshaft end play

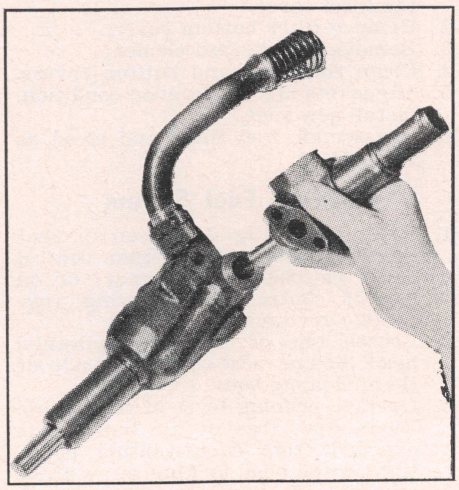

Fig. 32 Oil pump and oil delivery housing

OIL PAN

1. Remove drain plug and drain oil.
2. Remove dipstick and tube, strainer, breather pipe and all bolts securing pan to crankcase.
3. Remove all traces of old gasket.
4. Wash and clean strainer.
5. Installation is made in the reverse order. Be sure that oil suction pipe enters the hole provided in the strainer.

OIL PUMP & OIL DELIVERY HOUSING

1. Remove oil pan and strainer.
2. Disconnect oil delivery housing from crankcase.
3. Unscrew oil pump locating bolt. *This bolt is located outside of cylinder block.*
4. Remove oil pump and oil delivery housing. *The two parts of the assembly are connected by a short pipe which is a push fit in each component, Fig. 32. A rubber "O" ring is recessed into the bore of both units to ensure an oil tight joint. It is advisable to replace these seals whenever the connecting pipe is disturbed.*
5. Reverse the foregoing to install.

Oil Pump Repairs

1. Remove bottom cover and disassemble pump by pulling out the shaft, inner and outer rotor.
2. Clean all parts and inspect rotor for cracks or scores.
3. Install rotors in pump body, making sure that chamfered edge of outer rotor enters pump body first.
4. Check clearance between the maximum diameter of inner rotor and minimum diameter of outer rotor at all points. If clearance exceeds .008″, renew oil pump.
5. Check clearance between top of rotors and surface of pump body with a feeler gauge and straightedge. If clearance exceeds .005″, renew oil pump.
6. Reassemble pump and install.

WATER PUMP

1. Drain cooling system and remove fan and belt.
2. Unfasten and remove pump from cylinder block. Pump must be withdrawn during removal of mounting bolts to permit removal of left-hand center bolt, Fig. 33.

Water Pump Repairs

1. Remove pulley with puller. Left-hand center mounting bolt may now be removed from housing if so desired.
2. Remove front bearing snap ring.
3. Press out shaft with bearings and spacer from rear (impeller) end.

   If the impeller is badly corroded so it cannot be removed from the shaft without damage, it can be removed with the shaft from the front end of the pump.
4. Remove impeller and rear seal from housing.
5. Remove front seal, retainer and flange.
6. Press two bearings and spacer from shaft.
7. Reverse disassembly procedure to

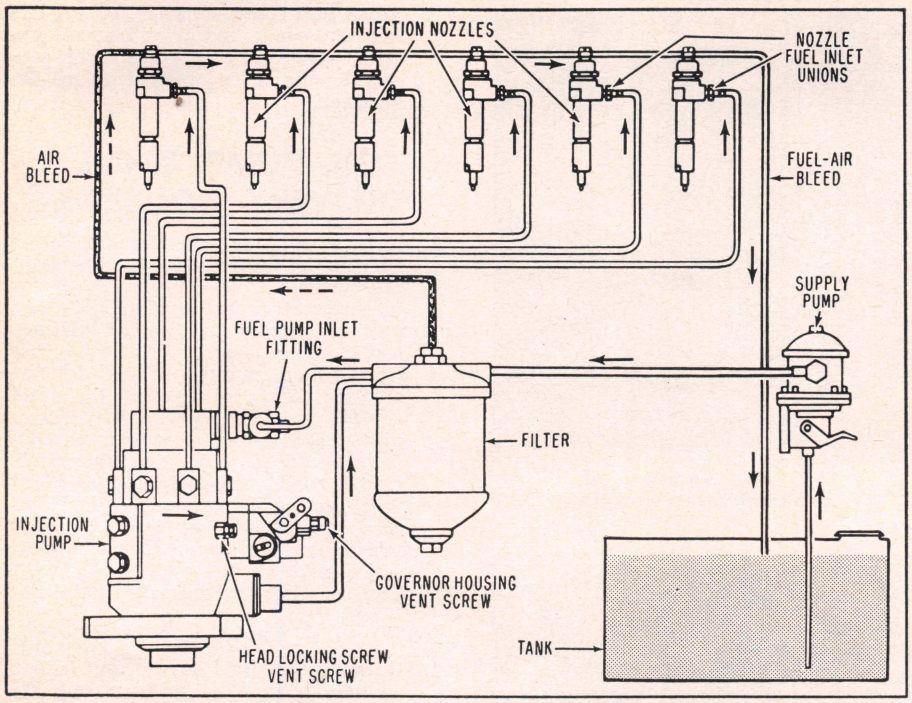

Fig. 34 Diesel fuel system with C.A.V. hydraulic governed injection pump

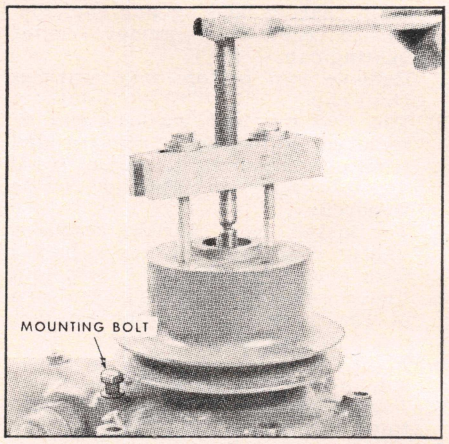

Fig. 33 Removing water pump pulley. Mounting bolt shown can be removed only after pulley is taken off

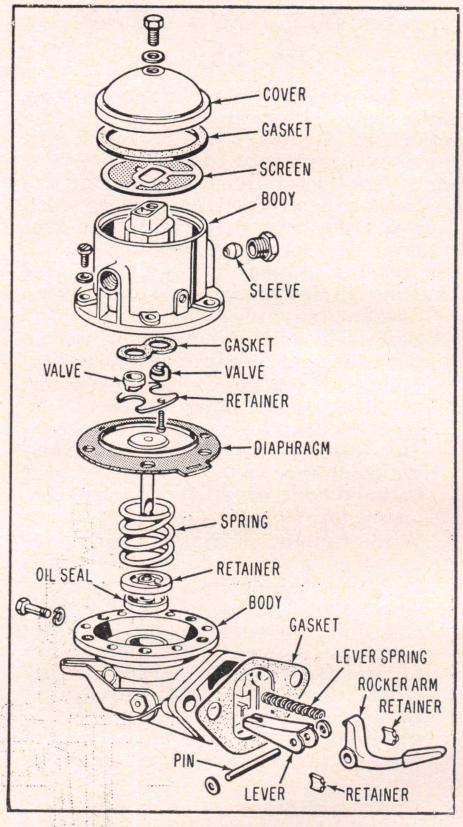

Fig. 35 Fuel supply pump

assemble the pump, noting the following:

8. Be sure that each bearing end cover faces outward toward front end of shaft.
9. The front seal retainer plate is "dished" and when positioned, the center of the plate must not be in contact with the bearing.
10. Install felt seal and retainer housing so that these bear on retaining plate.
11. Half fill space between bearings with wheel bearing grease and press complete assembly into pump housing from front end. Install front snap ring.
12. Install rear seal into housing with carbon face positioned toward rear. When installed, seal must rest squarely on its seat and not be misaligned in any way.
13. At this stage the shaft must be turned by hand to be sure that no undue resistance to rotation exists.
14. Insert left-hand center mounting bolt in housing, Fig. 33.
15. Install pulley and key, being sure no end play of shaft is incurred.
16. Press impeller on shaft so that a clearance of .012 to .019" clearance is present between inner edge of impeller vanes and pump body.

FUEL SYSTEM

Fuel Filter Maintenance

The first filter is a gauze type fitted in the fuel lift pump. It should be removed by unscrewing the bolt securing the domed cover on the top of the fuel lift pump and cleaned every 12,000 miles or 600 hours of operation unless the condition of the fuel warrants more regular attention. *When reassembling, be sure that a good seal is made between the cover and fuel pump body as any leakage of air here may cause air leaks in the fuel system.*

The second filter is a paper element type, the element being located between the top and bottom covers of the filter. The paper element should be renewed every 18,000 miles or 900 hours of operation.

Fuel Oil Filter, Replace

1. Unscrew the bolt in the center of the top filter cover.
2. Remove filter bottom cover.
3. Remove and discard element.
4. Clean filter top and bottom covers.
5. If gaskets are not in good condition, install new ones.
6. Reassemble fuel filter and bleed as follows:

Bleeding Fuel System

1. Referring to Fig. 34, loosen air vent screw on front of governor control cover (mechanical governor) or on top of control gear housing (hydraulic governor).
2. Loosen one of the two hydraulic head locking screws on the side of the fuel pump body.
3. Operate priming lever of fuel pump. When fuel, free of air bubbles, is expelled from each venting point, tighten the head locking screw first, then the governor vent screw.
4. Loosen pipe union nut at the pump inlet. Operate the priming device and retighten when fuel, free of air bubbles, is expelled from around threads.
5. Loosen the unions at the nozzle ends of two of the high pressure pipes.
6. Set engine speed control in the fully open position and be sure that the "Stop" control is in the "Run" position.
7. Turn engine until fuel oil, free from air bubbles, is expelled from both fuel pipes.
8. Tighten unions on fuel pipes.

FUEL SUPPLY PUMP

The fuel supply pump, Fig. 35, is of the diaphragm type similar to the type used on gasoline engines. It is located on the right side of the engine and driven by an eccentric cam on the camshaft.

A hand primer is an integral part of the fuel supply pump. Use the hand

primer to pump fuel from the tank until supply pump, filters, pipes and injection pump are filled with fuel.

Whenever an attempt is made to start a new or rebuilt engine or an engine on which fuel lines have been disconnected (such as when changing a fuel filter or servicing the injection pump) or an engine that has been standing idle for some time, the fuel system must be primed or bled. The procedure is given under Fuel Filter Maintenance.

FUEL INJECTION PUMP

The fuel injection pump which is shown being removed from the engine in Fig. 17, is a distributor type pump incorporating an all speed governor and an automatic advance. The pump is driven by a splined shaft. It is a self-contained, oil-tight unit, requiring no external lubricating system. The pump housing is completely filled with fuel oil under pressure during operation so that all parts are adequately lubricated.

Pressure maintained within the pump housing prevents the formation of air locks and also the entrance of dirt, water or other foreign matter which might impair the efficiency of the pump.

Pumping is effected by a single pumping element, having twin opposed plungers, located transversely into a central rotating member which also acts as a distributor, Fig. 36. The rotor revolves in a stationary member, known as the hydraulic head. The pump plungers are operated by contact with cam lobes on a stationary internal cam ring.

The fuel is metered before entering the pumping element, and the accurately metered high pressure charges are distributed to the engine cylinders in correct firing order and at the required timing intervals through a system of ports in the rotor and the hydraulic head.

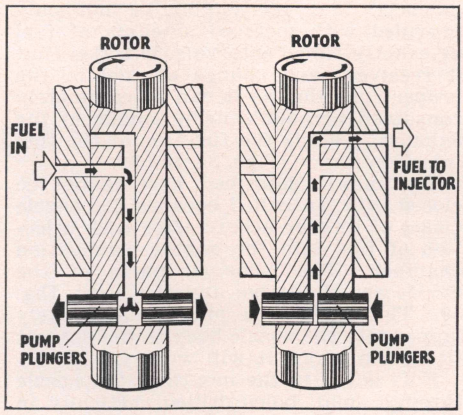

Fig. 36 Fuel injunction pump rotor showing inlet and injector stroke

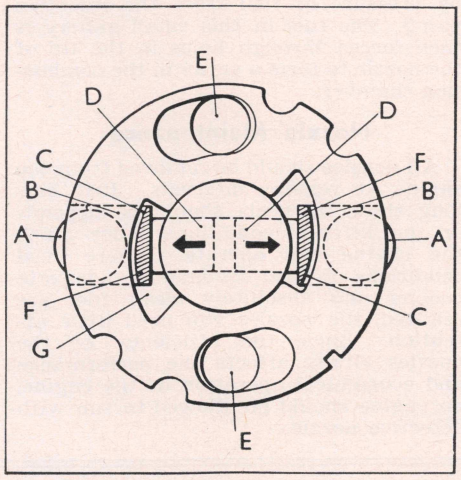

Fig. 37 Maximum fuel adjustment

A simple hydraulic type governor is embodied in the pump to give accurate control of engine speed throughout the complete speed range of the engine and under all conditions of engine loading. An automatic advance mechanism is also provided to vary the point of commencement of injection.

Maximum Fuel Adjustment

Maximum fuel adjustment is made by limiting the maximum outward travel of the pumping plungers at a point where the desired fueling is obtained.

The cam rollers (A), Fig. 37, are carried in shoes (B) against which the pumping plungers (D) are pressed by the incoming fuel. The shoes slide in guides machined in the rotor, and are retained in an endwise sense by top and bottom adjusting plates. "Ears" (F), integral with the roller shoes, project into eccentrically cut slots (G) in both adjusting plates. The "ears" are shaped to match the contour of the slots.

The bottom adjusting plate is rigidly clamped between the drive plate and the end of the rotor. The screws that secure the drive plate pass through elongated holes (E) in the adjusting plate so that the adjusting plates can be moved when the screws are loosened. Top and bottom plates are located one to the other by lugs integral with the top plate.

The plungers reach their outward limit of travel when the "ears" on the roller shoes contact the curved sides of the slots in the adjusting plates. In Fig. 37, the adjusting plates are shown in the position which would provide the lowest possible maximum fuel setting. Since the slots in the adjusting plates are eccentric, maximum plunger travel will be increased if the adjusting plates are moved in a clockwise direction in relation to the rotor. The movement provided permits a wide range of maximum fuel settings. Clearance (C) indicates the remaining travel to bring the plungers to the maximum fuel position.

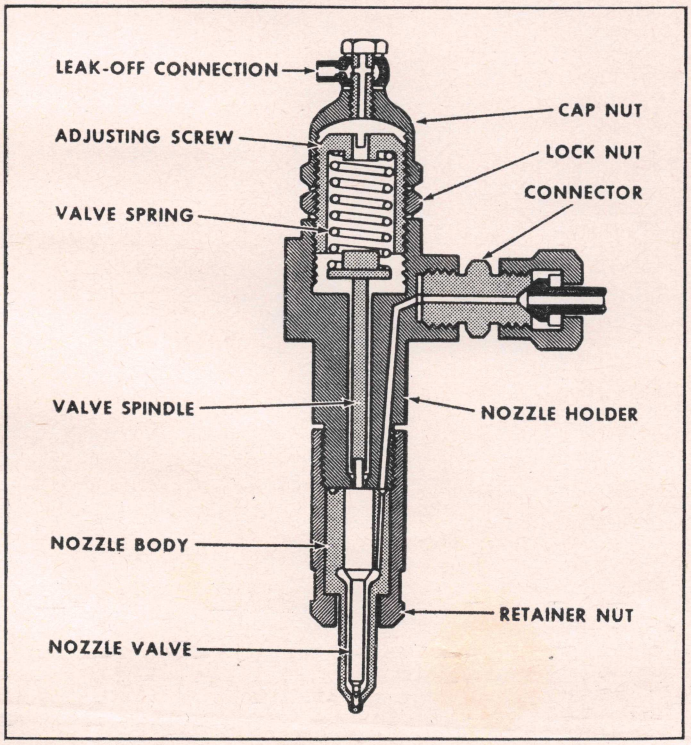

Fig. 38 Fuel injection nozzle

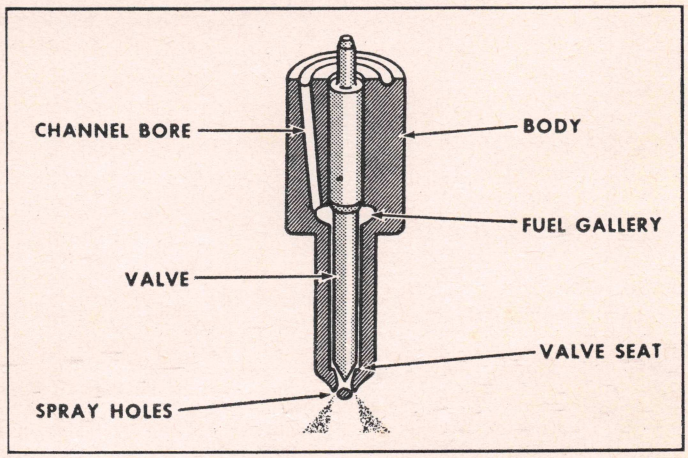

Fig. 39 Nozzle valve and body removed from nozzle holder

Fuel Metering

Apart from the small losses which occur during the injection stroke, the total volume of fuel introduced into the element is passed on to the nozzle. Metering is effected, therefore, by regulating the volume of fuel which enters the element at each charging stroke.

The volume of the charge is governed by two principal factors: the fuel pressure at the inlet port, and the time available for fuel to flow into the element while the inlet ports in the rotor and the hydraulic head are in register. It is by controlling the pressure at the inlet port that accurate metering is achieved.

INJECTION PUMP REPAIRS

Disassembly, assembly, testing and adjustment of the pump are operations which demand the services of specially trained personnel and the use of certain special tools and test apparatus. Conditions of scrupulous cleanliness must be maintained in workshops where pump overhaul is carried out since even the smallest abrasive dust particles can cause damage to the pump, impair its efficiency and considerably shorten its satisfactory working life.

FUEL INJECTION NOZZLES

The performance of the high speed diesel engine depends largely on the proper function of its fuel injection system. For maximum efficiency it is essential that the engine be not only provided with metered amounts of fuel at exactly timed intervals, but also that it receives each charge of fuel in the proper condition so it can be completely consumed without causing smoke at the exhaust. This is the function of the fuel injection nozzle, Figs. 38 and 39.

The nozzle described here is of the closed type, so called because the nozzle closes of its own accord after each injection of fuel into the engine combustion chamber. The principal parts of the nozzle are the valve and the body, Fig. 39. The valve is a plunger accurately lapped into the nozzle body to the nearest fit within which it will work freely.

Fuel is fed to the mouth of the nozzle through small holes drilled vertically in the nozzle body, which terminate in an annular gallery above the valve seat. The nozzle valve is raised from its seat by pressure of fuel from the injection pump. The fuel in this small gallery is then forced through holes in the tip of the nozzle to form a spray in the combustion chamber.

Nozzle Maintenance

All nozzles should be removed from the engine at regular intervals. Just how long these intervals should be depends on the different conditions under which the engine will operate. Where ideal conditions of good combustion, adequate cooling and absolutely clean fuel are realized, the nozzles will need little attention. Since the efficiency of the nozzles vitally affects the performance and economical operation of the engine, no engine should be allowed to run with defective nozzles.

Testing Nozzles

If everything else is in order (see Trouble Shooting) and the nozzles are still suspected, the nozzle causing the trouble can often be found by releasing the pipe union nut on each nozzle in turn, with engine running and listening to the idling performance of each of the cylinders.

1. To test a doubtful nozzle, loosen injection pipe at both ends and remove nozzle holder from cylinder head. *A blast of compressed air around each nozzle before loosening the holder will prevent dirt or moisture from entering the combustion chamber when the nozzle is removed.*
2. Turn nozzle and holder around the injection pipe so that the nozzle points away from the engine.
3. Retighten both ends of injection line.
4. Next, loosen pipe unions at the other nozzles to prevent fuel oil from being sprayed into cylinders.
5. Turn engine with starter until the removed nozzle sprays fuel into the air. *If spray is "wet" or "streaky", or to one side, or if the nozzle "dribbles", remove and install a complete new or reconditioned unit. Keep hands away from spray as the working pressure will cause the oil to penetrate the skin with ease.*

Nozzle Repairs

Like injection pump repairs, nozzle repairs should be performed in a clean, dust-free place where no other work is performed, and the job should be done by specially trained personnel.

REO

INDEX OF SERVICE OPERATIONS

PAGE NO.

AXLES, DRIVING
Eaton Axle Service 176
Locking Differentials 169
Timken Axle Service 209

BRAKES
Adjustments 252
Air Brake System 259
Hydraulic Brake System 250
Vacuum Brake Boosters 268

CLUTCH 888

COOLING SYSTEM
Cooling System Capacity 871
Water Pump Repairs 882

ELECTRIC SYSTEM
Alternators & Regulators 37
Dash Gauge Service 93
Distributor Specifications 875
Distributor Service 7
Generator Specifications 874
Generator & Regulator Service 27
Ignition, Transistorized 22
Ignition Timing 882
Starting Motor Specifications 875
Starting Motor Service 65
Starter Switch Service 85

PAGE NO.

ENGINE
Camshaft & Bearings 880
Crankshaft Bearing Specifications 874
Crankshaft End Play, Adjust 881
Crankshaft Oil Seal, Replace 881
Cylinder Head, Replace 877
Cylinder Sleeves 880
Main Bearings, Replace 881
Piston Pins, Replace 881
Piston Rings, Replace 881
Piston & Ring Specifications 874
Pistons & Rods, Remove 880
Piston & Rod, Assemble 880
Pistons, Replace 880
Rocker Arm Service 877
Rod Bearings, Replace 881
Timing Gears 879
Valves, Adjust 878
Valves, Grind 878
Valve Guides, Replace 879
Valve Lifters 879
Valves, Remove 878
Valve Rotators 878
Valve Seat Inserts 878
Valve Spring Installed Height 879
Valve Spring Testing 879
Valve Specifications 873
Valve Stems, Grinding 879

ENGINE OILING
Crankcase Capacity 871
Crankcase Ventilation 6
Oil Pump Repairs 881

PAGE NO.

FUEL SYSTEM
Carburetor Adjustments 882
Carburetor Governors 884
Carburetor Service Notes 882
Crankcase Ventilation 6
Fuel Pump Service 104
L.P.G. Carburetion 109

SPECIFICATIONS
Carburetor Adjustment 882
Crankshaft & Bearing 874
Distributor 875
Generator & Regulator 874
Piston, Pin & Ring 874
Starting Motor 875
Tune Up 873
Valve 873
Wheel Alignment 876

STEERING GEARS 891

TRANSFER CASES 242

TRANSMISSIONS
Clark 110
Fuller 122
New Process 135
Reomatic 281
Reomatic Linkage 891
Spicer 141
Warner 164

TUNE UP SERVICE 2

MODEL INDEX & ENGINE APPLICATION

ENGINE IDENTIFICATION—Reo service parts identification plate is located on inside of truck cab. Stamped on plate is the model of the engine, transmission, auxiliary transmission, rear axle and front axle. This represents only the equipment on the vehicle when shipped from the factory. Prior to Reo's assimilation by The White Motor Company, identification plates were attached to engines and transmissions.

CONVENTIONAL GASOLINE MODELS

Series	Year	Standard Engine Make	Standard Engine Model	Crankcase Refill Capacity, Qts. (1)	Cooling System Capacity, Qts.
F-20	1952–58	Reo	OA-255	8	20
F-22	1952–58	Reo	OA-292	8	24
F-22R	1952–58	Reo	OA-331	8	24
F-22S	1952–58	Reo	OA-331	8	24
F-22T	1952–58	Reo	OA-292	8	24
F-50	1954–58	Reo	OH-170	8	26
C-200	1958–62	Reo	OA-110	8	22½
E-200	1962–63	Reo	OA-130	8	22½
C-300	1958–62	Reo	OA-130	8	22½
DF-300	1959–63	Reo	OA-145	8	33½
E-300	1962–63	Reo	OA-130	8	22½
D-303	1959–63	Reo	OA-130	8	22½
C-400	1958–62	Reo	OA-145	8	22½

Series	Year	Standard Engine Make	Standard Engine Model	Crankcase Refill Capacity, Qts. ①	Cooling System Capacity, Qts.
DF-400	1959–63	Reo	OA-145	8	33½
E-400	1962–63	Reo	OA-145	8	22½
AC-403	1956–58	Reo	OA-331	8	33
AC-403	1959	Reo	OA-145	8	33
D-403	1959–63	Reo	OA-145	8	22½
DC-403	1959–63	Reo	OA-145	8	29
C-500	1959–62	Reo	OH-170	8	22½
DF-500	1959–63	Reo	OH-170	8	33½
E-500	1962–63	Reo	OH-170	8	22½
AC-503	1956–59	Reo	OH-170	8	33
D-503	1959–63	Reo	OH-170	8	22½
DC-503	1959–63	Reo	OH-170	8	29
C-510	1960–62	Reo	OH-170	8	22½
E-510	1962–63	Reo	OH-170	8	22½
A-600	1955–56	Reo	OV-195	8	37½
A-600	1957–59	Reo	OV-207	8②	37½
DF-600	1961–63	Reo	OV-207	9	46
A-603	1956–59	Reo	OV-207	8②	37½
AC-603	1956	Reo	OV-195	8	37½
AC-603	1957–59	Reo	OV-207	8②	37½
D-603	1960–63	Reo	OV-207	8②	38½
DC-603	1960–63	Reo	OV-207	8②	33½
A-607	1957–59	Reo	OV-207	8②	37½
A-620	1955–57	Reo	OV-195	8	37½
A-630	1955–58	Reo	OV-207	8②	37½
A-633	1955–59	Reo	OV-207	8②	37½
AC-633	1955–59	Reo	OV-207	8②	37½
A-700	1955–59	Reo	OV-207	8②	37½
DF-700	1961–63	Reo	OV-207	9	46
A-703	1956–59	Reo	OV-207	8②	37½
AC-703	1956–59	Reo	OV-207	8②	37½
D-703	1960–63	Reo	OV-207	8②	38½
DC-703	1960–63	Reo	OV-207	8②	33½
A-730	1955–58	Reo	OV-207	8②	37½
A-733	1955–58	Reo	OV-207	8②	37½
AC-733	1957–58	Reo	OV-207	8②	37½
A-800	1956–57	Reo	OV-220	8②	37½
A-830	1956–57	Reo	OV-220	8②	37½

TANDEM GASOLINE MODELS

F-216	1952–58	Reo	OA-331	8	24
C-330	1958–59	Reo	OA-331	8	24
C-330	1960–62	Reo	OA-145	8	22½
DF-330	1960–63	Reo	OA-145	8	33½
E-330	1962–63	Reo	OA-145	8	22½
C-430	1958–62	Reo	OH-170	8	22½
DF-430	1960–63	Reo	OH-170	8	33½
DO-430	1961–63	Reo	OH-170	8	32½
DO-530	1962–63	Reo	OH-170	8	32½
C-436	1958	Reo	OH-170	8	24
DOL-436	1961–62	Reo	OH-170	8	32½
C-440	1958–62	Reo	OH-170	8	22½
E-430	1962–63	Reo	OH-170	8	22½
E-440	1962–63	Reo	OH-170	8	22½
C-442-OH	1958–62	Reo	OH-170	8	22½
F-506	1952–58	Reo	OH-170	8	26
C-530	1958–62	Reo	OH-170	8	22½
DF-530	1960–63	Reo	OH-170	8	33½
E-530	1962–63	Reo	OH-170	8	22½
C-536	1958	Reo	OH-170	8	24
C-536-OH	1958	Reo	OH-185	8	31½
F-536	1952–58	Reo	OH-170	8	26
C-540	1960–62	Reo	OH-185	8	31½
E-540	1962–63	Reo	OH-186	8	29
D-630	1960–63	Reo	OV-207	8②	38½
DF-630	1961–63	Reo	OV-207	9	46
D-633	1960–62	Reo	OV-207	8②	38½
DC-633	1962–63	Reo	OV-207	9	33½
D-730	1960–63	Reo	OV-207	8②	38½
DF-730	1961–63	Reo	OV-207	9	46
D-733	1960–62	Reo	OV-207	8②	38½

SCHOOL BUS MODELS

F-120	1952–58	Reo	OA-255	8	20
F-122	1952–58	Reo	OA-292	8	24
C-270	1958–62	Reo	OA-110	8	22½
C-370	1959–62	Reo	OA-130	8	22½
A-375	1958	Reo	OA-331	8	24
A-375	1959–62	Reo	OA-145	8	24
C-378	1960–62	Reo	OA-145	8	30
C-470	1959–62	Reo	OA-130	8	22½
A-475	1958	Reo	OA-331	8	24
A-475	1959–62	Reo	OA-145	8	24
C-478	1960–62	Reo	OA-145	8	30
D-478	1960–62	Reo	OV-207	8②	34½
C-578	1960–62	Reo	OA-145	8②	30
D-678	1960–62	Reo	OV-207	8②	34½

DIESEL MODELS

F-50D	1952–58	Cummins	JT-6	16	28
C-430D	1958	Cummins	JT-6	16	28
F-506D	1952–58	Cummins	JT-6	16	28
C-530D	1958	Cummins	JT-6	16	28
F-536D	1952–58	Cummins	JT-6	16	28
A-603D	1956–59	Cummins	JT-6	16	37½
AC-603D	1956–59	Cummins	JT-6	16	37½
E-630D	1960–63	Cummins	NH-180		36
E-632D	1960–62	Cummins	NH-180		36
A-633D	1956–58	Cummins	JT-6	16	37½
AC-633D	1956–58	Cummins	JT-6	16	37½
D-633D	1960–63	Cummins	NH-180		48
E-633D	1960–62	Cummins	NH-180		36
BCL-633D	1959–62	Cummins	NH-180		54
DCL-633D	1962–63	Cummins	NH-180		58
B-700D	1959	Cummins	NH-180		
E-700D	1960–63	Cummins	NH-180		36
E-702D	1960–62	Cummins	NH-180		36
BCL-703D	1959	Cummins	NH-180		54
A-703D	1956–59	Cummins	JT-6	16	37½
AC-703D	1956–59	Cummins	JT-6	16	37½
BCL-703D	1959–62	Cummins	NH-180		54
D-703D	1960–63	Cummins	NH-180		48
DCL-703D	1962–63	Cummins	NH-180		58
E-703D	1960–62	Cummins	NH-180		36
E-730D	1960–63	Cummins	NH-180		36
E-732D	1960–62	Cummins	NH-180		36
BCL-733D	1959–62	Cummins	NH-180		54
E-733D	1960–62	Cummins	NH-180		36
D-733D	1960–63	Cummins	NH-180		48
DCL-733D	1962–63	Cummins	NH-180		58
E-803D-OH	1960–62	Cummins	NH-180		36
E-830D-OH	1960–63	Cummins	NH-180		36

①—Less filter.
②—After Engine No. 225,274: 9 qts.

GENERAL ENGINE SPECIFICATIONS

Year	Engine Model	No. Cyls. & Valve Location	Bore & Stroke	Piston Displacement Cubic Inch	Compression Ratio ①	Maximum Brake H. P. @ R. P. M. ①	Maximum Torque Lb. Ft. @ R. P. M. ①	Normal Oil Pressure, Lbs.
1960–62	OA-100LPG	6 In Head	3⅝ x 4⅛	255	7.15	100 @ 3400	182 @ 1600	40
1958–62	OA-110	6 In Head	3⅝ x 4⅛	255	6.70	110 @ 3400	194 @ 1400	40
1958–63	OA-130	6 In Head	3⅞ x 4⅛	292	6.94	130 @ 3300	230 @ 1600	40
1960–62	OA-142LPG	6 In Head	4⅛ x 4⅛	331	8.20	142 @ 3200	258 @ 1800	40
1958–63	OA-145	6 In Head	4⅛ x 4⅛	331	6.73	145 @ 3200	270 @ 1600	40
1952–57	OH-160	6 In Head	4⅛ x 4⅛	331	6.73	160 @ 3200	290 @ 1400	40
1952–62	OH-160LPG	6 In Head	4⅛ x 4⅛	331	8.20	160 @ 3300	280 @ 1200	40
1957–63	OH-170	6 In Head	4⅛ x 4⅛	331	7.50	170 @ 3400	297 @ 1600	40
1959–61	OH-185	6 In Head	4¼ x 4¼	362	7.50	185 @ 3400	320 @ 1200	40
1962–63	OH-186	6 In Head	4¼ x 4¼	362	7.50	186 @ 3400	320 @ 1200	40
1961–63	OH-200	6 In Head	4¼ x 4.7	400	7.50	200 @ 3400	365 @ 1200	40
1954–58	OV-195	8 In Head	3⅞ x 4⅛	390	7.30	195 @ 3200	345 @ 2200	50
1956–58	OV-200	8 In Head	3⅞ x 4⅛	390	7.30	200 @ 3200	350 @ 2200	50
1957–63	OV-207	8 In Head	3⅞ x 4⅛	390	7.30	207 @ 3400	354 @ 2400	50
1954–57	OV-220	8 In Head	4⅛ x 4⅛	440	7.30	220 @ 3200	405 @ 2000	50
1956–62	OV-220LPG	8 In Head	4⅛ x 4⅛	440	8.50②	220 @ 3200	405 @ 2000	50
1956	OV-225	8 In Head	4⅛ x 4⅛	440	7.30	225 @ 3200	410 @ 2000	50
1956–63	OV-235	8 In Head	4⅛ x 4⅛	440	7.30	235 @ 3400	412 @ 2400	50
1952–58	OA-255	6 In Head	3⅝ x 4⅛	255	6.70	107 @ 3400	189 @ 1100	40
1952–56	OA-255LPG	6 In Head	3⅝ x 4⅛	255	7.15	100 @ 3400	182 @ 1600	40
1952–58	OA-292	6 In Head	3⅞ x 4⅛	292	6.55	124 @ 3300	224 @ 1400	40
1952–58	OA-331	6 In Head	4⅛ x 4⅛	331	6.40	140 @ 3200	264 @ 1600	40
1952–59	OA-331LPG	6 In Head	4⅛ x 4⅛	331	8.20	142 @ 3200	258 @ 1800	40

①—Current production. ②—Latest production 7.7.

TUNE UP & VALVE SPECIFICATIONS

Year	Engine Model	Firing Order	Spark Plugs		Ignition Timing		Cyl. Head Torque, Lb. Ft.	Valve Seat Angle Degrees	Valve Clearance H—Hot C—Cold		Valve Spring Installed Height
			Type④	Gap	Timing Mark	Location			Intake	Exhaust	
1960–62	OA-100LPG	153624	J7	.020	6° BTC	Pulley	100	30	.015H	.015H	①
1958–62	OA-110	153624	J7	.025	8° BTC	Pulley	100	30	.015H	.015H	①
1958–63	OA-130	153624	J6	.025	4° BTC	Pulley	100	30	.015H	.015H	①
1960–62	OA-142LPG	153624	J6	.020	6° BTC	Pulley	100	30	.015H	.015H	①
1958–63	OA-145	153624	J6	.025	2° BTC	Pulley	100	30	.015H	.015H	①
1952–57	OH-160	153624	J6	.025	5° BTC	Pulley	100	30	.023C	.023C	①
1952–62	OH-160LPG	153624	J6	.020	8° BTC	Pulley	100	30	.023C	.023C	①
1957–63	OH-170	153624	J6	.025	2° BTC	Pulley	100	30	.023C	.023C	①
1959–61	OH-185	153624	J4	.025	6° BTC	Pulley	100	30	.023C	.023C	①
1962–63	OH-186	153624	J4	.025	6° BTC	Pulley	100	30	.023C	.023C	①
1961–63	OH-200	153624	J4	.025	⑤	Damper	100–105	30	.022H	.022H	①
1954–58	OV-195	15486372②	H9	.025	TDC	Pulley	100	30	.023C	.023C	①
1956–58	OV-200	15486372②	H9	.025	TDC	Pulley	100	30	.023C	.023C	①
1957–62	OV-207	15486372②	H8	.025	TDC	Pulley	100	30	.023C	.023C	①
1954–57	OV-220	15486372②	H8	.025	TDC	Pulley	100	30	.020H	.020H	①
1956–62	OV-220LPG	15486372②	H8	.020	③	Pulley	100	30	.020H	.020H	①
1956	OV-225	15486372②	H9	.025	TDC	Pulley	100	30	.020H	.020H	①
1956–63	OV-235	15486372②	H8	.025	TDC	Pulley	100	30	.020H	.020H	①
1952–58	OA-255	153624	J7	.025	8° BTC	Pulley	100	30	.015H	.015H	①
1952–56	OA-255LPG	153624	J7	.020	6° BTC	Pulley	100	30	.015H	.015H	①
1952–58	OA-292	153624	J6	.025	4° BTC	Pulley	100	30	.015H	.015H	①
1952–58	OA-331	153624	J6	.025	2° BTC	Pulley	100	30	.015H	.015H	①
1952–59	OA-331LPG	153624	J6	.020	6° BTC	Pulley	100	30	.015H	.015H	①

①—Intake 1 25/32″, exhaust 1 19/32″.
②—Cylinder numbering (front to rear): Right bank 1–2–3–4, left bank 5–6–7–8.
③—With 8.5 compression ratio TDC; with 7.7 compression ratio (late 1960) 6° BTC.
④—Champion. Normal service.
⑤—With Dist. 1111905, set at TDC; with Dist. No. 1111923, set at 6° BTC.

PISTON, PIN, RING, CRANKSHAFT & BEARING SPECIFICATIONS

Year	Engine Model	Wrist-pin Diameter	Piston Clearance, Inch	Ring End Gap, In. (Minimum)		Crankpin Diameter, In.	Rod Bearing Clearance, In.	Rod Bolt Torque, Lb. Ft.	Main Bearing Journal Diameter. In.	Main Bearing Clearance, Inch	Main Bolt Torque, Lb. Ft.
				Comp.	Oil						
1960–62	OA-100LPG	1.125	.003①	.012	.012	2.1705–2.1712	.001–.0032	65–70	2.4975–2.4982	.001–.0035	85–90
1958–62	OA-110	1.125	.003	.012	.012	2.1705–2.1712	.001–.0032	65–70	2.4975–2.4982	.001–.0035	85–90
1960–62	OA-142LPG	1.125	.004①	.012	.012	2.1805–2.1812	.001–.0032	65–70	2.4975–2.4982	.001–.0035	85–90
1958–63	OA-130	1.125	.003	.012	.012	2.1805–2.1812	.001–.0032	65–70	2.5075–2.5082	.001–.0035	85–90
1958–63	OA-145	1.125	.004	.012	.012	2.1805–2.1812	.001–.0032	65–70	2.5075–2.5082	.001–.0035	85–90
1952–57	OH-160	1.125	.004	.012	.012	2.3093–2.3125	.001–.0032	65–70	2.7485–2.7492	.001–.0035	85–90
1952–62	OH-160LPG	1.125	.004	.012	.012	2.3093–2.3100	.001–.0032	65–70	2.7485–2.7492	.001–.0035	85–90
1957–63	OH-170	1.0625	.004	.015	.012	2.3093–2.3100	.001–.0032	65–70	2.7485–2.7492	.001–.0035	85–90
1959–61	OH-185	1.0625	.004	.012	.012	2.3093–2.3100	.001–.0032	65–70	2.7485–2.7492	.001–.0035	85–90
1962–63	OH-186	1.0625	.004	.012	.012	2.3093–2.3100	.001–.0032	65–70	2.7485–2.7492	.001–.0035	85–90
1961–63	OH-200	1.0625	.003①	.020	.017	2.3093–2.3125	.001–.0032	65–70	②	.001–.0035	90–95
1954–58	OV-195	1.0625	.0015	.015	.012	2.4978–2.4985	.001–.0032	65–70	2.9976–2.9988	.0015–.0044	85–90
1956–58	OV-200	1.0625	.0015	.015	.012	2.4978–2.4985	.001–.0032	65–70	2.9976–2.9988	.0015–.0044	85–90
1957–62	OV-207	1.0625	.0015	.015	.012	2.4978–2.4985	.001–.0032	65–70	2.9976–2.9988	.0015–.0044	85–90
1954–57	OV-220	1.0625	.0015	.015	.012	2.4978–2.4985	.001–.0032	65–70	2.9976–2.9988	.0015–.0044	85–90
1956–62	OV-220LPG	1.0625	.0015	.015	.012	2.4978–2.4985	.001–.0032	65–70	2.9976–2.9988	.0015–.0044	85–90
1956	OV-225	1.0625	.0015	.015	.012	2.4978–2.4985	.001–.0032	65–70	2.9976–2.9988	.0015–.0044	85–90
1956–63	OV-235	1.0625	.0015	.015	.012	2.4978–2.4985	.001–.0032	65–70	2.9976–2.9988	.0015–.0044	85–90
1952–58	OA-255	1.125	.003①	.012	.012	2.1705–2.1712	.001–.0032	65–70	2.4975–2.4982	.001–.0035	85–90
1952–59	OA-255LPG	1.125	.003①	.012	.012	2.1705–2.1712	.001–.0032	65–70	2.4975–2.4982	.001–.0035	85–90
1952–58	OA-292	1.125	.003①	.012	.012	2.1805–2.1812	.001–.0032	65–70	2.5075–2.5082	.001–.0035	85–90
1952–58	OA-331	1.125	.004①	.012	.012	2.1805–2.1812	.001–.0032	65–70	2.5075–2.5082	.001–.0035	85–90
1952–59	OA-331LPG	1.125	.004①	.012	.012	2.1805–2.1812	.001–.0032	[illegible]–70	2.5075–2.5082	.001–.0035	85–90

①—When checked with a ½″ wide feeler it should require a 3 to 8 lb. pull on a spring scale to withdraw the feeler past the piston.
②—Front 3.1231–3.1238, others 3.1235–3.1242.

GENERATOR & REGULATOR SPECIFICATIONS

★To Polarize Generator: For internally grounded systems, disconnect field lead from regulator and momentarily flash this wire to regulator battery terminal. For externally grounded systems, connect a jumper wire from "hot" side of battery to armature terminal of generator.

Generator						Regulator					
							Cutout Relay				
Gen. No. ①	Ground Polarity	Brush Spring Tension, Oz.	Rated Cap. Amps.	Gen. Field Ground Location★	Field Current	Reg. No. ②	Closing Voltage	Arm. Air Gap, In.	Voltage Setting	Current Setting	Current & Voltage Reg. Arm. Air Gap, In.
1100019	Positive	28	35	External	1.85–2.03	1118731	6.4	.020	7.4	38	.075
1102040	Negative	28	30	External	1.48–1.62	1119001	12.7	.020	14.4	30	.075
1102746	Positive	28	40	External	1.87–2.0	1118382	6.4	.020	7.2	42	.075
1102788	Positive	28	45	External	1.87–2.0	1118743	6.4	.020	7.2	47	.075
1102967	Negative	25	18	External	1.54–1.67	1118210	12.8	.020	14.3	17	④
1105127	Negative	28	35	External	2.73–3.00	1119604	12.4	.020	14.2	35	⑤
1106637	Negative	23	25	External	1.13–1.27	1118214	12.8	.020	14.3	25	④
1106757	Positive	20	55	External	1.70–1.95	1118395	6.4	.020	7.2	45	.075
1106758	Positive	20	45	External	1.70–1.95	1118366	6.4	.020	7.2	55	.075
1106821	Negative	20	40	External	1.37–1.50	1118887	12.8	.020	14.5	40	.075
1106822	Negative	20	50	External	1.37–1.50	1119156	12.7	.020	14.2	50	.050
1106986	Negative	20	50	External	2.14–2.28	1119606	12.4	.020	14.2	50	⑤
1106990	Negative	20	50	External	2.14–2.28	1119606	12.4	.020	14.2	50	⑤
1106991	Negative	20	55	External	2.14–2.28	1119605	12.4	.020	14.2	55	⑤
1117004	Positive	23	40	Internal	1.33–1.45	5637	13.5	③	14.6	40	.015

①—Stamped on plate riveted to housing.
②—Stamped on regulator base.
③—Cutout relay air gap, .057″. Cutout relay point opening, .020″.
④—Voltage regulator air gap, .070″. Current regulator air gap, .080″.
⑤—Current regulator air gap .075″, voltage .067″, point opening .016″.

DISTRIBUTOR SPECIFICATIONS

Unit Part No. ①	Rotation ②	Cam Angle, Degrees	Breaker Gap, In.	Condenser Capacity, Mfds.	Breaker Arm Spring Tension, Oz.	Centrifugal Advance Deg. @ RPM of Dist.		Vacuum Advance		
						Advance Starts	Full Advance	Inches of Vacuum to Start Plunger Movement	Inches of Vacuum for Full Plunger Travel	Maximum Vacuum Advance, Dist. Degrees
1110620	C	26–33	.016	.20–.25	17–21	1 @ 275	14 @ 1200	None	None	None
1110621	C	26–33	.016	.20–.25	17–21	1 @ 325	15 @ 1500	None	None	None
1110623	C	26–33	.016	.20–.25	17–21	1 @ 300	12½ @ 525	None	None	None
1110631	C	26–33	.016	.20–.25	17–21	1 @ 275	15 @ 1200	None	None	None
1110632	C	26–33	.016	.20–.25	17–21	1 @ 325	16 @ 1500	None	None	None
1110633	C	26–33	.016	.20–.25	17–21	1 @ 300	12 @ 525	None	None	None
1111660	C	30	.016	.20–.25	17–21	1 @ 325	16 @ 1500	None	None	None
1111774	C	31–37	.022	.20–.25	17–21	1 @ 275	16 @ 1500	None	None	None
1111779	CC	31–37	.022	.20–.25	17–21	1 @ 325	16 @ 1500	None	None	None
1111806	C	31–37	.022	.20–.25	17–21	1 @ 250	18 @ 1050	None	None	None
1111812	C	31–37	.022	.20–.25	17–21	1 @ 275	15 @ 1150	None	None	None
1111832	C	31–37	.022	.20–.25	17–21	1 @ 225	14 @ 1050	None	None	None
1111854	C	38–45	.016	.20–.25	17–21	1 @ 225	14 @ 1050	None	None	None
1111862	C	31–37	.022	.20–.25	17–21	1 @ 300	11 @ 1200	None	None	None
1111866	C	38–45	.016	.20–.25	17–21	1 @ 275	15 @ 1150	None	None	None
1111905	C	38–45	.016	.20–.25	17–21	1 @ 450	16 @ 1700	None	None	None
1111922	C	38–45	.016	.20–.25	17–21	1 @ 450	13 @ 1375	None	None	None
1111923	C	38–45	.016	.20–.25	17–21	1 @ 425	11 @ 1700	None	None	None
1112355	CC	31–37	.022	.20–.25	17–21	1 @ 250	15 @ 1500	3–5	13–15	7.5
1112365	C	31–37	.022	.20–.25	17–21	1 @ 250	16 @ 1200	None	None	None
1112405	C	31–37	.022	.20–.25	17–21	1 @ 275	15 @ 1150	None	None	None

① Stamped on plate riveted to housing. ② As viewed from top; C—Clockwise. CC—Counter-clockwise.

STARTING MOTOR SPECIFICATIONS

Unit Part No. ①	Rotation ②	Brush Spring Tension, Oz.	No Load Test			Torque Test		
			Amperes	Volts	R. P. M.	Amperes	Volts	Torque Ft.
1107671	C	35	112	10.6	3240	385	3.5	...
1107074	C	24–28	70	5.65	5500	550	3.25	11
1107607	C	24–28	75	10.3	6500	460	5.2	11.5
1107963	C	24–28	60	5.0	6000	600	3.0	15
1108026	C	24–28	70	5.65	5500	570	3.15	12
1108133	C	24–28	70	11.3	6000	530	6.7	16
1108213	C	24–28	70	5.0	3500	600	3.0	22
1108409	C	24–28	70	10.0	3000	490	6.5	28
1108603	C	24–28	75	11.25	6000	615	5.85	29
1108621	C	24 Min.	75	11.25	6000	615	5.85	29
1108724	C	36–40	115	11.6	7000	570	2.3	20
1108813	C	36–40	115	11.6	7000	570	2.3	20
1108985	C	36–40	65	11.3	5500	675	4.0	30
1109150	C	36–40	65	11.4	6000	725	5.0	44

① Stamped on plate riveted to housing.
② As viewed from drive end; C—Clockwise.

WHEEL ALIGNMENT SPECIFICATIONS

★Caster degrees vary with the springs used and are affected by the wheelbase length. Caster may vary either way from the mean specifications listed below to obtain alignment that will give proper steering performance. NOTE: Specifications apply to unladen vehicles.

Truck Model	Axle Model	Caster Deg.★	Camber Deg.*	Toe-In Inch	Kingpin Angle°†
A-375	FE-900	3	1	0–1/8	5½
A-475	FE-900	3	1	0–1/8	5½
A-603	FD-900	3¼	1	0–1/8	5½
	FE-900	3¼	1	0–1/8	5½
A-630	FD-900	3¼	1	0–1/8	5½
	FE-900	3¼	1	0–1/8	5½
	27462	3	1	1/16–1/8	8
A-633	FD-900	3¼	1	0–1/8	5½
	FE-900	3¼	1	0–1/8	5½
A-703	FD-900	3¼	1	0–1/8	5½
	FE-900	3¼	1	0–1/8	5½
A-730	FE-900	3¼	1	0–1/8	5½
	27462	3	1	1/16–1/8	8
A-733	FD-900	3¼	1	0–1/8	5½
	FE-900	3¼	1	0–1/8	5½
AC-403	FD-900	3¼	1	0–1/8	5½
	FE-900	3¼	1	0–1/8	5½
AC-503	FD-900	3¼	1	0–1/8	5½
	FE-900	3¼	1	0–1/8	5½
AC-603	FD-900	3¼	1	0–1/8	5½
	FE-900	3¼	1	0–1/8	5½
AC-633	FD-900	3¼	1	0–1/8	5½
	FE-900	3¼	1	0–1/8	5½
AC-703	FD-900	3¼	1	0–1/8	5½
	FE-900	3¼	1	0–1/8	5½
BCL-633D	FE-11	1	1	1/16–3/16	0
BCL-703D	FE-11	1	1	1/16–3/16	0
BCL-733D	FE-11	1	1	1/16–3/16	0
C-200	30000	2	1	0–1/8	8
	31104	2	1	0–1/8	8
	32500	2	1	0–1/8	8
C-270	31104	2	1	0–1/8	8
	32500	2	1	0–1/8	8
	FC-901	1½	1	0–1/8	5½
C-300	32500	2	1	0–1/8	8
	FC-901	1½	1	0–1/8	5½
C-330	FC-901	1½	1	0–1/8	5½
	FD-901	1½	1	0–1/8	5½
	FE-901	1½	1	0–1/8	5½
C-370	32500	2	1	0–1/8	8
	FC-901	1½	1	0–1/8	5½
	FD-901	1½	1	0–1/8	5½
C-378	FD-900	—1¾	1	0–1/8	5½
	FE-900	—1¾	1	0–1/8	5½
C-400	32500	2	1	0–1/8	8
	FC-901	1½	1	0–1/8	5½
	FC-901	1½	1	0–1/8	5½
C-430	FD-901	1½	1	0–1/8	5½
	FE-900	1½	1	0–1/8	5½
C-440①	F-2090	5–7	0	1/16–3/16	0
C-440②	F-233	5–7	0	3/16–5/16	0
C-442-OH②	F-233	5–7	0	3/16–5/16	0
C-470	32500	2	1	0–1/8	8
	FC-901	1½	1	0–1/8	5½
	FD-901	1½	1	0–1/8	5½
C-478	FD-900	—1¾	1	0–1/8	5½
	FE-900	—1¾	1	0–1/8	5½
C-500	FD-901	1½	1	0–1/8	5½
	FE-900	1½	1	0–1/8	5½
C-510①	F-2090	5–7	1	1/16–3/16	0
C-510②	F-233	5–7	1	3/16–5/16	0
C-530	FE-900	1½	1	0–1/8	5½
C-536-OH	FG-900	1½	1	0–1/8	5½
C-540②	F-233	5–7	0	3/16–5/16	0
C-578	FE-900	—1¾	1	0–1/8	5½
D-303	32500	2	1	0–1/8	8
	FC-901	1½	1	0–1/8	5½
D-403	32500	2	1	0–1/8	8
	FC-901	1½	1	0–1/8	5½
	FD-901	1½	1	0–1/8	5½
D-478	FD-900	—1¾	1	0–1/8	5½
	FE-900	—1¾	1	0–1/8	5½
D-503	FD-901	1½	1	0–1/8	5½
	FE-900	1½	1	0–1/8	5½
D-678	FE-900	—1¾	1	0–1/8	5½
E-630D	FD-901	1½	1	0–1/8	5½
	FE-901	1½	1	0–1/8	5½
	FE-15	1	1	1/8	0
E-700D	FD-901	1½	1	0–1/8	5½
	FE-901	1½	1	0–1/8	5½
	FE-15	1	1	1/8	0
E-730D	FE-900	1½	1	0–1/8	5½
	FE-15	1	1	1/8	0
E-830D-OH	FE-15	1	1	1/8	0

*Camber may vary as much as ½° either way from the mean specifications listed.

†Kingpin inclination is built into the axle beam and should not be disturbed.

Engine Section

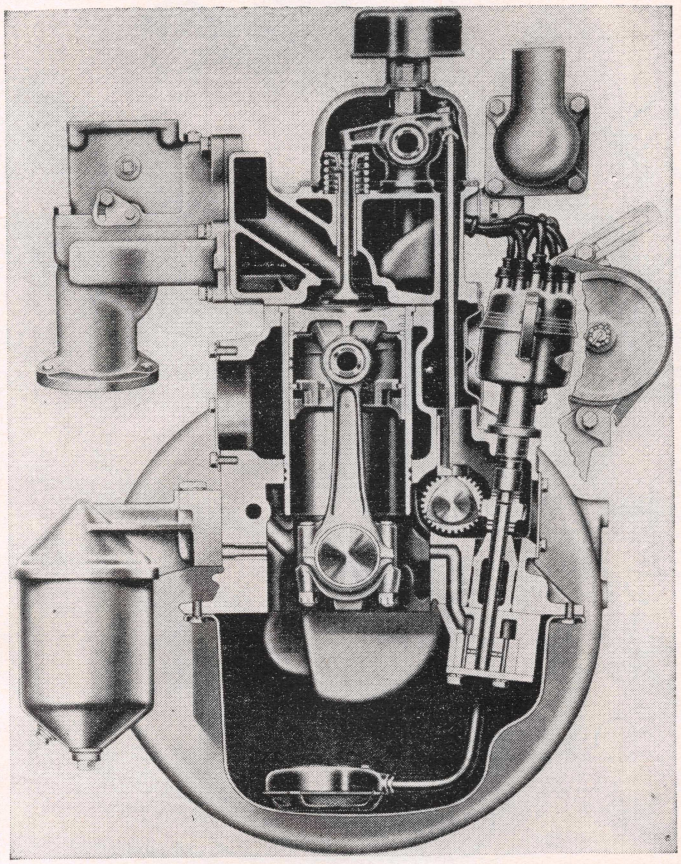

Fig. 1 Sectional view of Reo OA engines

CYLINDER HEAD, REPLACE

All Engines

When removing a cylinder head a chisel or screw driver should never be used to pry it loose from the cylinder block. Use an eyebolt in the third or fourth spark plug hole (6-cyl. engines), lifting up on the eyebolt while tapping lightly around the edges of the head with a lead or rawhide hammer or mallet. Be sure all the head stud nuts or bolts have been removed before starting to remove the head.

In replacing the head, the stud nuts or bolts at the center of the head should be tightened first and then work outward from side to side and to the ends. Draw the nuts or bolts down evenly until all are normally tight. After the engine has run long enough to warm it up, make a final tightening with a torque wrench to the torque loads given in the *Tune Up & Valve Specifications* table (Figs. 3,4).

V8 Service Note

Beginning with Engine No. 227579 (April 29, 1959) all V8 engines have been assembled with redesigned rocker arm covers and cylinder heads. Eight bosses were added to the head casting and are drilled and tapped for the cover hold-down bolts.

Important: The two studs in each head are positioned at the front and rear corners on the inner edge. *Studs must be used at these four points since the holes are drilled through into the water outlet passages.* If capscrews are used in these tapped holes, water will leak past the threads and into the rocker arm chambers. The other holes are not drilled through.

ROCKER ARM SERVICE

Sludge and gum formation in the rocker arms and shafts will restrict the normal flow of oil to the rocker arms and valves. Each time the rocker arm and shaft assemblies are removed they should be disassembled and thoroughly cleaned.

When disassembling rocker arms, place all parts on the work bench in their proper sequence to insure correct assembly.

Clean all sludge and gum formation from the inside and outside of the shaft. Clean oil holes and passages in the rocker arms and shafts. Clean the oil connector. Inspect the shafts for wear.

Check the ball ends of the rocker arms to be sure they are not pitted or rough. If used in this condition, it will be difficult to maintain valve clearances.

Six Cylinder Engines

The valve mechanism is pressure lubricated from the rear camshaft bearing up through an oil passage in rear of block, through slot in cylinder head gasket to passage in head, up to and into the rocker shaft at rear support. The two tubular shafts on which the rocker arms are mounted are held in position by two terminal and five intermediate supports using seven of the bolts that secure the cylinder head to the block. The five intermediate supports are alike, but the two end supports are closed on the outer face, against which one end of the rocker arm shaft is inserted.

Oil holes in the rocker arms are drilled at a 10° offset angle from vertical toward the valve end of the arm. The arm has a split type bronze bushing. Oil holes in the shaft are drilled at right angles to the centerline of the shaft at top and bottom.

When installing new bushings in arms, drill hole in bushing after installation using hole in rocker arm as a guide. Be sure and clean off all burrs on inner side of bushing caused by drilling. When installing rocker arm cover make certain the two leather washers (nut gaskets) are properly in place.

CAUTION: Tighten the holding nuts firmly but not to a point of springing the cover.

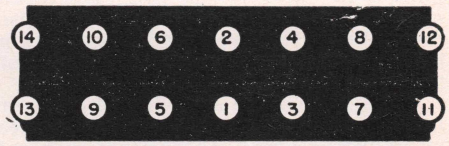

Fig. 3 Cylinder head tightening on OA, OH engines

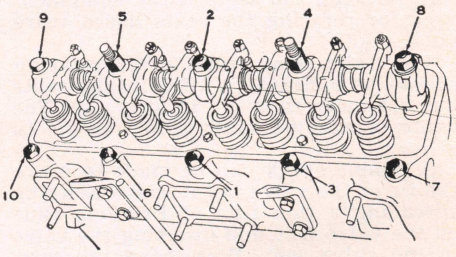

Fig. 4 Cylinder head tightening sequence. Reo V8 engines

Rocker Arm Bushing Data

Rocker Arm I.D., Bushing O.D. (Press fit)	1.1245-1.1255
Bushing I.D., finish after assembly	.9903- .9913
Rocker Arm Shaft O.D.	.989 - .990
Nominal clearance	.0013-

NOTE: To facilitate assembly of bushing and rocker arm, coat back of bushing with a mixture of white lead and oil before pressing into place.

VALVES, ADJUST

All Engines

Adjust the valves to the clearances given in the *Tune Up & Valve Specifications* table. If the valves are to be adjusted warm, run the engine for about 30 minutes to normalize the expansion of all parts.

VALVES, REMOVE

After removing the cylinder head and rocker arm assembly, use a suitable spring compressor to compress the springs. Remove the valve locks and springs. Check the keeper grooves in the valve stems for burrs and remove any burrs with a file to prevent scoring of valve guides. Remove the valves and place them in a board with numbered holes so they can be replaced in the same valve port from which they were removed.

VALVES, GRIND

Clean the valves with a wire wheel brush, making sure that all carbon is removed from the top and bottom of the heads as well as the gum which might have accumulated on the stems.

In refacing valves, take off only the minimum of metal required to clean up the valve faces. If the outer edge of the valve becomes too thin or sharp due to excessive grinding, the valve must be replaced. In other words, the valve head margin must be at least $\frac{3}{64}$", otherwise the valve must be replaced. This margin is the area above the contact surface of the valve face.

Inspect the valve seats in the block or head for cracks, burns, pitting, ridges or improper angle. During any general engine overhaul, it is advisable to reface the valve seats regardless of their condition. If new valve guides are required, they must be installed and reamed before refacing the seats if the equipment used for refacing the seats has a valve guide pilot.

The valve seat width after refacing should be a liberal $\frac{1}{16}$" for intake seats but not more than $\frac{3}{32}$" in any case. The width of exhaust seats should be $\frac{3}{64}$" to a liberal $\frac{1}{16}$".

A simple check can be made to prove the fit of the valve in the valve seats by spreading a thin film of Prussian Blue on the valve face and inserting the valve in the valve seat. With hand pressure, rotate the valve ¼ turn, remove it and observe the transfer of Prussian Blue to the valve seat. An uneven transfer will indicate an inaccurate valve and valve seat refacing operation.

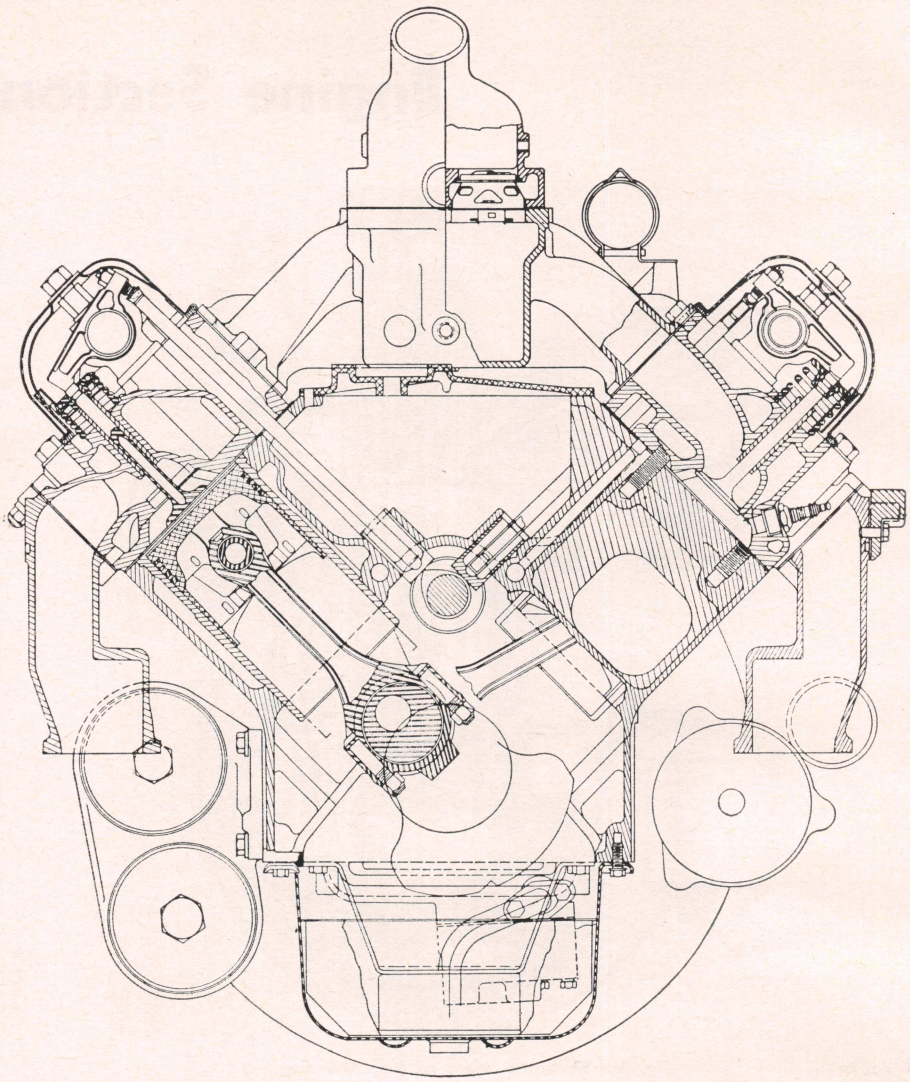

Fig. 2 Sectional view of Reo V8 engine

VALVE ROTATORS

Increased exhaust valve service in these engines is accomplished by the use of "Roto Valve" mechanism which is a special valve spring retainer and cap located on the end of the valve stem.

In operation, the rocker arm striking the cap lifts the retainer first, thus taking the spring load off the valve before lifting it from its seat. When the valve is in the raised position, it is free to rotate due to the vibration of the system.

When checking valve clearances, the feeler gauge is placed between the cap and socket as there is no other flat surface in the valve train.

VALVE SEAT INSERTS

Since these inserts are too hard to reface by ordinary hand grinding methods, a high speed grinder or special lapping equipment should be used to perform this operation. When using this equipment, be sure valve guides are clean and the valve guide pilot is a snug fit in order to assure a concentric finish. Finished seats should be checked with a dial indicator and runout should not exceed .001".

To remove an insert (if a suitable puller is not available), drill two holes at opposite sides of the insert but not all the way through. Then cut through the undrilled portion with a sharp chisel and remove the two pieces.

To install a new insert, first remove all burrs and sharp edges from the seat recess. Then chill the new insert with "dry ice" to obtain maximum contraction of the metal and place it in the recess. If necessary, the insert may be pounded in by using a round driver the same size as the insert and pounding on same with a hammer.

If a standard insert is too loose, an oversize insert should be used. Oversize inserts are $\frac{1}{16}$" larger than the standard and, therefore, the recess should be bored out $\frac{1}{16}$" to accommodate the oversize insert.

When installed, peen the block or head

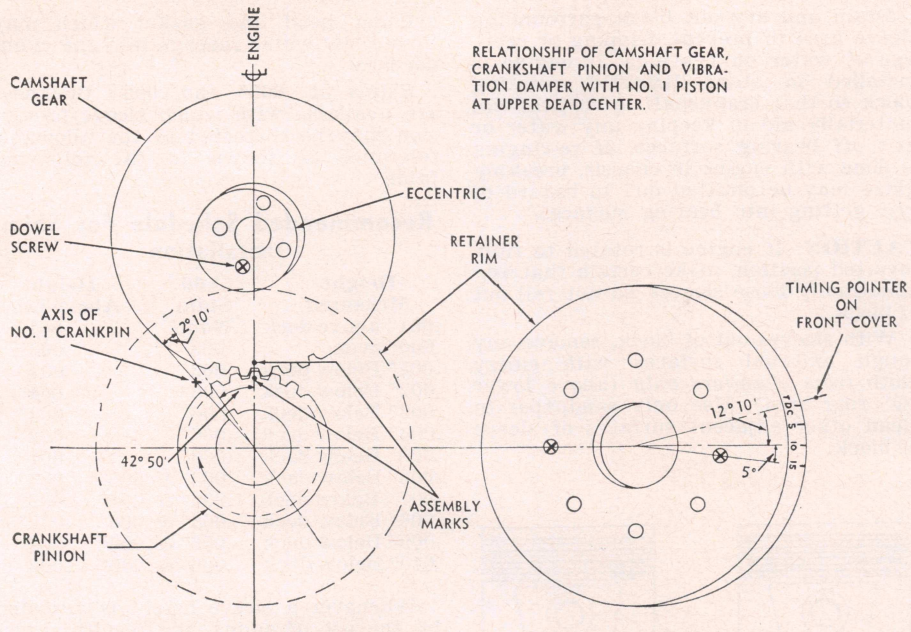

Fig. 5 Relationship of front end components. Reo V8 engines

around the insert bore to insure it remaining in place.

VALVE SPRING INSTALLED HEIGHT

When valves and seats are reground the position of the valve in the head is changed so as to lessen the valve spring tension. Without proper valve spring tension the valve does not seat long enough or it may not seat completely. Since the valve is cooled by transferring heat from the valve head to the seat and thence to the coolant, improper valve spring tension will cause worn, pitted and distorted valves which result in loss of compression and power as well as poor gasoline mileage.

When valves, springs, retainers and locks are installed, measure the assembled height of the valve springs from the surface of the cylinder head spring pad to the underside of the spring retainer as shown in Fig. 4A. If the assembled height is greater than the dimension given in the *Valve Specifications Chart,* install a spacer or shim of proper thickness between cylinder head spring pad and spring to bring the assembled height to specifications.

Do not install spacers unless necessary. Excessive use of spacers will result in overstressing valve springs and overloading camshaft lobes which could lead to spring breakage and worn camshaft lobes.

GRINDING VALVE STEMS

For Proper Lifter Clearance

If a valve grind job is needed, and if shims are found under the valve springs, very likely the valves, if reground, would not leave sufficient margin on the valve head for satisfactory operation. Since the maximum thickness of shimming that can be used satisfactorily is 1/16", and since the acceptable valve head margin is approximately 1/16" to 3/32", one can readily see that there would be insufficient margin left on the valve head if it was reground. Therefore, it is recommended that new valves be installed.

After grinding the valves, if shims are required to restore the correct valve spring installed height, *the valve stem should be ground off the same amount as the thickness of shims required. This will automatically provide the proper static clearance between the hydraulic lifter and the push rod.*

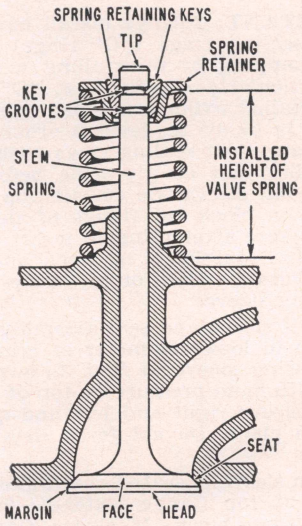

Fig. 4A Checking valve spring installed height

VALVE SPRING TESTING

After removing the valve springs, wash them with gasoline or other suitable solvent. Examine the springs for damage or corrosion due to acid etching, which will develop into surface cracks and cause spring failure.

Check the valve spring tension on a spring testing fixture if one is available. If a fixture is not available, at least check the free length of each spring by standing it alongside a new spring. Any spring that does not conform to the pressure specifications given in the *Tune Up & Valve Specifications* table within 10% should be replaced. Likewise, any spring that stands shorter than the new spring used for comparison should be discarded. Of course, cocked springs should be scrapped.

VALVE GUIDES, REPLACE

Clean the valve guides with a wire guide brush and check the clearance between the valve stems and guides. Excessive clearance will cause improper seating and burned valves. When there is too much clearance between intake valve stems and guides, there is a tendency to draw oil vapor through the guide on the suction stroke, causing excessive oil consumption, fouled spark plugs and poor low speed performance.

To check valve stem-to-guide clearance, take a new valve and place it in each valve guide and feel the clearance by moving the valve stem back and forth. If this check shows excessive clearance, it will be necessary to replace the valve guide.

If the clearance is not excessive when checking with a new valve but is excessive when checked with the old valve, the old valve stem is worn and a new valve must be installed.

Valve stem-to-guide clearance may also be checked with a dial indicator or with plug gauges.

Valve guides may be removed and installed with a suitable puller and installer made for the purpose. If such equipment is not available, the old guides can be driven out or they can be pulled out by using a piece of pipe together with a long bolt and suitable washers.

After the new guides have been installed, they should be reamed to round out the holes and to provide adequate operating clearances.

VALVE LIFTERS

These engines are equipped with barrel type lifters which can be lifted out from above after taking out the push rods. With this construction the oil pan and camshaft need not be disturbed.

TIMING GEARS

Valve timing is correct when the timing gears are installed so that the timing marks on the gears are meshed. Fig. 5 illustrates the relationship of the parts on V8 engines.

CAMSHAFT & BEARINGS

Camshaft end play is controlled by a thrust plate just behind the camshaft gear. End play should be held to about .005″ and can be checked by forcing the shaft back to the limit of its end play and inserting a feeler gauge between the thrust plate and the front end of the shaft. If end play is excessive, install a new thrust plate.

On these engines, steel-backed, lead babbitt-lined split bearings are used.

PISTONS & RODS, REMOVE

After removing the cylinder head and oil pan, examine the cylinder bores above the ring travel area. If the bores are worn so that a ridge exists at this point, remove the ridge with a ridge reamer to avoid damaging rings or cracking ring lands of pistons during removal.

Before removing pistons, mark the pistons with a file on the inside of the skirt to indicate the bore from which each piston was removed and also its position in the bore with relation to the camshaft side of the engine. Connecting rods should also be suitably marked if they are not marked already.

Remove the connecting rod caps and push the assemblies out of the cylinders, using care to prevent rod bolts from nicking crankshaft journals. It is advisable to install caps on rods as they are removed to avoid mixing parts.

PISTONS & RODS, ASSEMBLE

If the pistons and rods have factory markings to indicate their position in the cylinders, assemble and install them according to these marks, or according to the marks made during removal if they were not otherwise marked, Fig. 6.

CYLINDER SLEEVES

Overhead Valve Engines

Whenever piston or ring installation is to be made, check cylinder sleeve bores for scores, out-of-round and taper. If out-of-round .006″ or more or if taper wear is .006″ or more, sleeve should be replaced. Reboring of sleeves and use of oversize pistons is not recommended. In many cases sleeves can be pulled out by hand to remove from block. When tight, do not drive out by pounding with metal objects as sleeves may be damaged or block distorted.

If rings only are to be installed, prior to removing pistons, remove ridge at top of each cylinder wall. When performing this operation, use particular care not to cut beyond the diameter of the cylinder wall. Leave approximately .001″ stock at ridge and remove with a hone. Each cylinder should be honed to break the glaze and to provide a better surface for wear-in of the new piston rings.

The cylinder block must be thoroughly cleaned after completion of honing operations.

Drain and dry out block surrounding sleeve area to prevent dripping or seepage of water on bearings. If engine is installed in stand RS-C356, rotating block so that crankshaft is vertical will materially aid in keeping any water or grit off bearing surfaces. If re-ringing is done with engine in chassis, breaking glaze may be omitted due to hazard of grit getting into bearing surfaces.

CAUTION: If engine is rotated to fully inverted position, make certain that any abnormally loose sleeves do not fall out of block.

With sleeves out of block, remove any rough external surfaces with emery cloth *from chamfers only* (above lower "O" ring area). Use only sandpaper to clean other adjacent surfaces of sleeve or block.

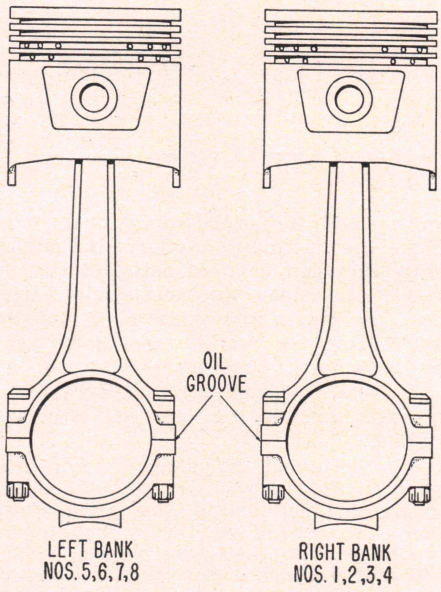

Fig. 6 Correct assembly of pistons and rods. V8 engines

IMPORTANT: Always install new neoprene sealing rings ("O" rings) whenever changing or reinstalling a sleeve. Be particularly careful that "O" rings are installed without a twist, otherwise a leak is likely to develop around "O" ring seam. Coat sealing rings with clean hydraulic fluid or glycerine before installing on sleeve. Be certain top counterbore in block for flange of sleeve is clean before attempting to insert sleeve. Clean the seal lands in block and coat with hydraulic fluid or glycerine before installing sleeve.

Install sleeve and seal assembly in its position in lower diameter of crankcase by allowing sleeve to find its own seat, then with hand pressure on top of flange rotate sleeve right and left and quickly push in place. *Do not force sleeve into block.*

When sleeve is seated check and make sure that top flange, extends .001″ to .005″ above block. If sleeve flange is below planed surface of block it will not be sealed and held in place by the cylinder head and gasket which may then allow water seepage into the cylinder bore.

Shims of .003″ and .006″ thickness are available with which sleeve protrusion may be corrected to the allowable tolerance as shown in the following table.

Recommended Schedule For Shim Installation

Height Measured	Add Shim	Height Above Deck
.001″ above deck	None	.001″
.000″ even	.003″	.003″
.001″ Below deck	.003″	.002″
.002″ Below deck	.006″	.004″
.003″ Below deck	.006″	.003″
.004″ Below deck	.006″	.002″
.005″ Below deck	.006″	.001″
.006″ Below deck	.003″ & .006″	.003″
.007″ Below deck	.003″ & .006″	.002″
.008″ Below deck	.003″ & .006″	.001″
.009″ Below deck	.006″ & .006″	.003″
.010″ Below deck	.006″ & .006″	.002″

Whenever a sleeve height is adjusted by the use of shims, the resulting protrusion should be within .002″ of that of the adjacent sleeves if possible.

PISTONS, REPLACE

Before a honing or boring operation is started, measure all new pistons with a micrometer at points 90 degrees away from the piston pin. Then select the smallest piston for the first fitting. The slight variation usually found between pistons in a set may provide for correction in case the first piston is fitted too free.

It is important that refinished cylinder bores are trued up to have not more than .0005″ out-of-round or taper. Each bore must be final honed to remove all stone or cutter marks and provide a smooth surface. During final honing, each piston must be fitted individually to the bore in which it will be installed and should be marked to insure correct installation.

After final honing and before the piston is checked for fit, each bore must be thoroughly washed to remove all traces of abrasive and then dried thoroughly. The dry bore should then be brushed clean with a power-driven fibre brush.

Both the piston and cylinder block must be at room temperature (70°) when the piston is checked for fit in the bore. Therefore, the cylinder should be allowed to cool after boring or honing and before the piston fit is checked. This is important because a difference of 10° between the temperature of parts is sufficient to produce a variation of .0005″.

With the piston rings and pin removed and cylinder wall and piston dry and clean, insert the piston upside down in the bore. Use a feeler ½″ wide which is long enough to extend the full length of the piston. The thickness of the feeler should be the same as the clearance given in the *Pistons, Rings & Bearings* table. With the feeler hooked to a spring scale, a specified lb. pull (see table) should be required to pull the feeler past the piston.

PISTON RINGS, REPLACE

When new rings are to be installed without reboring cylinders, the glazed cylinder walls should be slightly dulled but without increasing the diameter of the bore. This is done with a "Glazebuster" or a hone equipped with the finest grade of stones.

New rings must be checked for clearance in piston grooves and for gap in cylinder bores. The latter operation must be measured with the ring about two inches from the bottom of the cylinder bore to which it is to be fitted. Cylinder bores and piston grooves must be clean, dry and free from carbon and burrs.

Check the clearance of each ring in its piston groove by installing the ring and then inserting feeler gauges *under* the ring. Any wear that occurs in the piston groove forms a step or ridge at the inner portion of the lower land. If gauges are inserted above the ring, the ring may rest on the step instead of on the worn portion of the lower land and a false measurement of clearance will result.

If the piston grooves have worn to the extent that relatively high steps or ridges exist on the lower lands, the piston should be replaced because the steps will interfere with the operation of the new rings and ring clearances will be excessive. Piston rings are not furnished in oversize widths to compensate for ring groove wear.

PISTON PINS, REPLACE

These pins are the floating type, being free to rotate in both the rod and piston bosses. The pins are prevented from rubbing against the cylinder wall by snap rings which fit in grooves in the piston bosses.

Pins should be selected that can be installed by pushing with the palm of the hand with the piston at normal room temperature. To make assembly easier, however, heat the piston in boiling water for sion of the metal and quickly insert pin.

ROD BEARINGS, REPLACE

Connecting rods are fitted with precision type bearings, held in position by locking lugs which fit into grooves cut in the rods and in the caps.

Bearing clearance may be checked with Plastigage, which is available at any auto parts jobber. Instructions for its use are furnished with the package.

Lacking Plastigage, use a piece of tough paper or shim stock ¾" square which measures about .0005" under the maximum allowable bearing clearance. Oil the shim on both sides ad lay it in the center of the bearing. Install the assembled bearing and cap and tighten the cap nuts to the torque given in the table.

The clearance is correct if the rod can be moved endwise when tapped lightly with a hammer. If the rod can be moved endwise by hand, clearance is too great. On the other hand, if the rod will not move when tapped lightly with a hammer, not enough clearance is present.

Service Note

In checking bearing clearance, the White Company recommends the use of virgin lead wire. With this method, apply a thin film of SAE 20 engine oil to the bearing to be checked and place a piece of the lead wire (⅜" long) on each end of the rod bearing crankpin, parallel to the centerline of the crankshaft Then install the rod cap, rotating the crankshaft through a 15° arc as the cap nuts are being tightened. When the caps have been tightened to normal tension, free up the bearing by turning the crankshaft through a 15° arc and remove the cap and wire. Measure the flattened wire with a micrometer, which will be the clearance of the bearing.

MAIN BEARINGS, REPLACE

Insert type main bearings are used and may be replaced without removing the crankshaft. Main bearings should be replaced in sets and under no circumstances should they be filed or otherwise altered in an attempt to affect an adjustment.

Plastigage may be used to check the fit of bearings and instructions for its use are furnished with the package. The White Company, however, recommends the use of virgin lead wire to check the fit of bearings. This method is described under *Rod Bearings, Replace.*

CRANKSHAFT END PLAY, ADJUST

Overhead Valve Engines

On six-cylinder engines crankshaft end thrust is taken up on the front main bearing. On early models it is controlled by flanges on the upper half only of this bearing. Later models have thrust flanges on upper and lower halves.

On V8 engines crankshaft end play is controlled by flanges on the rear main bearing.

A quick check of crankshaft end play can be made by anchoring a dial indicator to the chassis back of the radiator with the indicator on the front of the crankshaft pulley. Throwing the clutch in and out will cause a forward movement of the crankshaft to the extent of its end play. Using a piece of 2 x 4 wood ahead of the pulley, pry the crankshaft back (with foot off clutch pedal).

If check shows end play in excess of .012", immediate correction of the condition is absolutely necessary because if the engine is allowed to run with excessive end play it will destroy the highly polished face of the crankshaft against which the bearing thrust flanges ride. Ultimately, this polished surface will be scored to the extent that a new thrust bearing will wear out in a very few miles. When this condition is reached the only correction is a new crankshaft.

CRANKSHAFT OIL SEAL, REPLACE

Overhead Valve Sixes

To replace the rear oil seal it is necessary to remove flywheel, oil pan and oil pan rear arch.

Many cases of oil leakage at the rear of the engine are caused by seals being damaged before and during installation.

In handling this seal, be careful that the inner seal part is not touched by dirt from the hands. Inspect before installing. If it is the least bit dirty or has any grit on it, wash in oleum spirits before installing. Any slight piece of foreign material which might become imbedded in this seal will cause it to leak.

Make sure that the hub of the crankshaft which the seal contacts is absolutely clean, polished and not scored. Invariable when the flywheel is removed, the edge of the crankshaft hub is burred or scratched when freed from the recess where it sets into the flywheel. Be sure and remove all burrs on hub and hub chamfer, eliminating all sharp and jagged edges before fitting seal over crankshaft hub.

As the seal is an expanding fit, be particularly careful not to distort or break the edge when fitting it over the crankshaft hub.

Secure housing or retainer to block from rear with 4 cap screws and tighten. Install rear arch. Secure retainer to arch from front with 3 lower and 2 upper cap screws. First secure all cap screws finger tight. Tighten screws top to opposite bottom alternately. Tighten lower center last.

The rear oil seal lip should be coated with grease (not oil) prior to installation on the crankshaft hub. The grease should be applied to the hub as well as the seal lip in order to avoid wiping the lubricant off the hub when the seal is installed. The purpose of this procedure is to prevent the seal from running with insufficient lubrication and, therefore, becoming excessively hot before crankcase oil can reach it. This grease application will also facilitate sliding the seal over the hub. Use Lubriplate #320, or an equivalent which has a relatively high melting point.

When bolting the housing into place, put Permatex #2 in the cap screw holes to keep internal pressure from forcing oil out between the cap screw and hole threads.

V8 Engines

Oil sealing at the rear main bearing is controlled by a wick-type seal in the same manner as for some side valve engines outlined above.

OIL PUMP REPAIRS

Oil pump is of the rotary type and is assembled to a special machined boss inside the crankcase. As the two rotors are matched at the time of assembly a complete new unit must be installed as rotor repairs are never satisfactory.

Oil pump drive gear is driven from the gear on the camshaft. The gear is pinned to the pump shaft and is replaceable.

WATER PUMP REPAIRS

These engines are equipped with ball bearing pump similar to that used on GC engines. A spring-loaded bellows type carbon seal is used and the shaft is retained by two ball bearings.

In servicing this pump, follow a similar procedure outlined above for GC engines.

IGNITION TIMING

If a timing light is to be used to set ignition timing, disconnect the vacuum advance pipe to the carburetor and place a piece of tape over open end of pipe. *This is important as carburetor trouble can affect timing adjustments.*

Lacking a power timing light, an accurate method of setting ignition timing with the engine stopped is with the aid of a jumper light. Be sure to use a light bulb that corresponds with the system voltage of the vehicle.

1. Remove distributor cap and rotor and see that the breaker gap is set according to specifications.
2. Rotate engine until No. 1 cylinder is at the ignition point as indicated by the timing pointer and timing mark being lined up with each other.
3. Connect the jumper light between distributor ignition terminal and ground.
4. Turn on ignition switch.
5. Loosen distributor and turn it in the direction of normal rotation until the points just close (light out). Then slowly turn distributor in the opposite direction just to the exact point that the light goes on. Tighten distributor in this position.

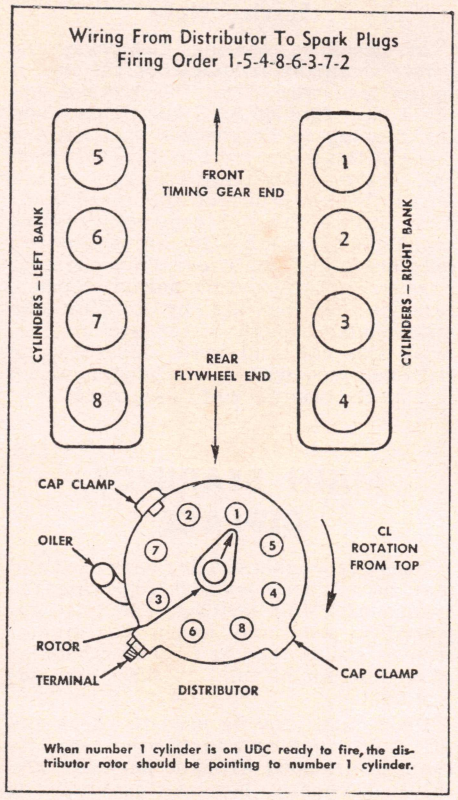

Fig. 7 Ignition details. Reo V8 engines

CARTER BBR2 CARBURETOR

Model 779S

In this carburetor, Fig. 8, correct air-fuel ratio is provided by a "balance tube" in the air horn. The balance tube should be checked each time the carburetor is serviced to see that the passage is open. The object of a balanced carburetor is to provide a constant air-fuel ratio regardless of size, type or condition of the air cleaner. Should the cleaner become clogged, the capacity will be reduced but the air-fuel mixture ratio will not be changed.

Service Note

Excessive richness above 50 mph may be caused by a clogged main vent tube. After removal of the rivet plug beneath the float bowl (use Tool T109-43) the main vent tube can be removed and a new tube inserted with Tool T109-195. Care must be exercised in inserting the new tube which must seat tightly. Use a new rivet to complete the installation.

Idle Adjustment

If the engine stalls while idling, set the throttle lever adjusting screw so the engine does not idle below 450 rpm. Then set the idle adjustment screw from ¾ to 1¼ turns open. If these adjustments do not correct the trouble, remove the idle orifice tube and plug assembly. Clean the tube passages with compressed air.

Float Setting

If the carburetor loads up after considerable service, check the float level as shown in Fig. 9 to a distance of $\frac{5}{64}$". Wear on the lip of the float lever will raise the float level. Before adjusting the float, be sure the float lever pin is firmly seated. Reset the float level by bending the lip of the float away from the needle to raise the level, or bend the lip toward the needle to lower the float level. Bend the vertical lip of the float only.

Pump Adjustment

If acceleration is not satisfactory, remove the pump jet and clean with compressed air. However, it is usually advisable to replace the pump jet as its cost is nominal. All jets must be seated gasoline tight. Poor acceleration may be due to damaged or worn plunger leather in the accelerating pump, sediment in the pump cylinder or clogged intake ball check at the bottom of the pump cylinder and discharge ball check in the discharge passage. If the plunger is removed from the cylinder, use care in installing to avoid damage to the plunger leather.

To adjust the pump, remove the air horn assembly, back out the throttle adjusting screw, and place the pump operating link in the center hole of the throttle shaft arm. Place Pump Travel Gauge T109-117S on the edge of the bowl cover so that the lip of the gauge extends over the top of the plunger shaft. Turn the knurled nut of the gauge until the lip contacts the plunger shaft at the

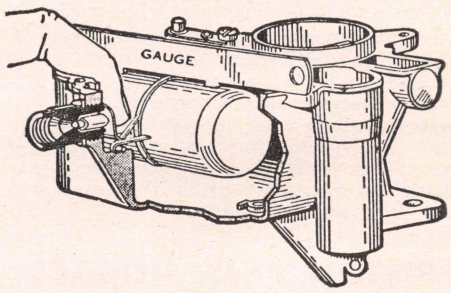

Fig. 9 Float setting. Carter BBR2 carburetor

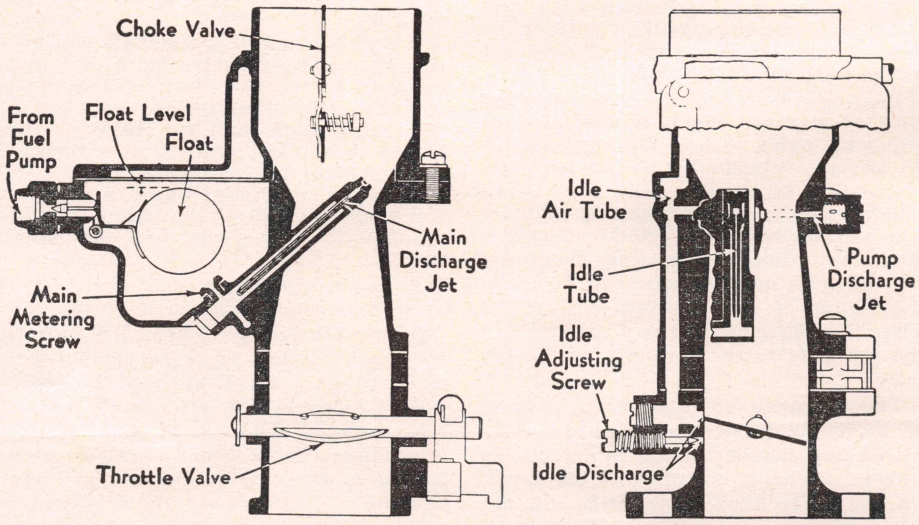

Fig. 8 Carter BBR2 carburetor. Reo OA-255 engine

closed and wide open throttle positions. The difference in readings obtained at closed and wide open throttle positions should be "30" (30/64") plunger travel. Adjustments can be made by bending the horizontal portion of the pump lifter link.

The pump stroke is adjustable for high or low temperature. Set to the long stroke for cold weather and short stroke for hot weather driving.

CARTER WA1-2542S

Idle Choke Settings

Set idle mixture adjusting screw 1¼ to 2¾ turns open. For richer mixture turn screw out. Do not idle engine below 500 rpm.

Set automatic choke two points lean.

Float Level Adjustment

The distance from the float (at free end) to tip on lower edge of float chamber cover when needle is seated should be ½".

Pump Adjustment

With throttle valve seated, and connector link in upper hole (long stroke) the pump plunger should travel 13/32" from closed to wide open throttle position. Adjust by bending throttle connector rod at the lower angle.

Metering Rod Adjustment

This setting must be made after the pump adjustment or when leaner than standard rod is installed.

Insert Gauge T-109-102 in place of metering rod, seating tapered end of gauge in metering rod jet. Hold gauge vertical to insure seating in jet. With throttle valve seated, press down on piston link directly over piston until it contacts pump arm. There should now be less than .005" clearance between metering rod pin and shoulder in notch in gauge. Gauge must not drag on pin. Adjust by bending lip on piston link. Remove gauge and install metering rod, disc, pin and spring.

Anti-Percolator Adjustment

Open throttle valve .016" by placing drill or Gauge T109-44 between throttle valve and bore of carburetor (side opposite idle port). Bend rocker arm until there is a clearance of .010" between rocker arm lip and pump arm.

Fast Idle Adjustment

With fast idle cam in normal idle position, tighten throttle lever adjusting screw until it just seats against cam. Hold throttle lever closed and pull cam back until first (or lower) step is against (not on) set screw. There should now be ⅝" clearance between inside wall of air horn and lower edge of choke valve. Adjust by bending fast idle link at offset portion.

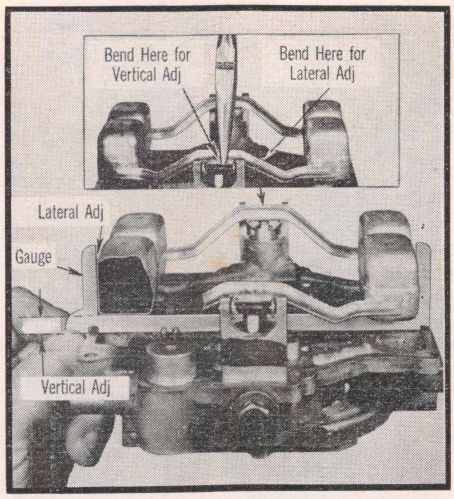

Fig. 10 Float level adjustment. Carter WCFB

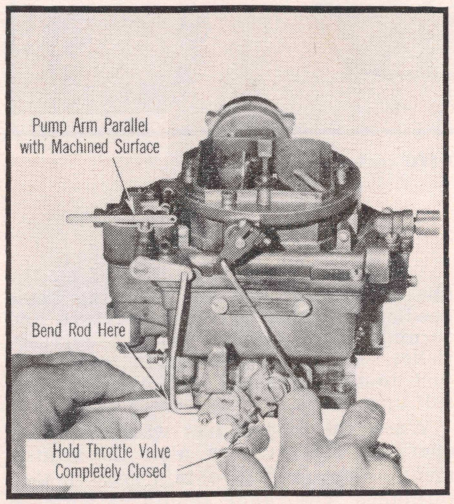

Fig. 11 Pump adjustment. Carter WCFB

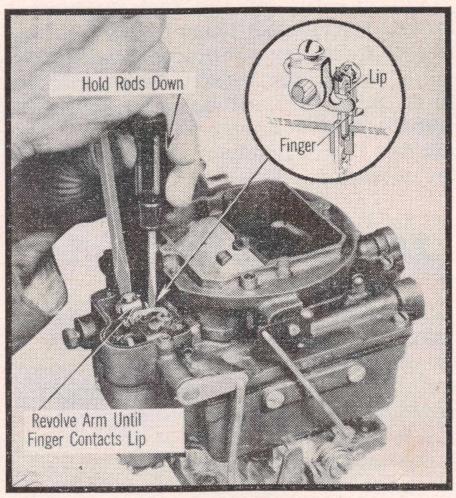

Fig. 12 Metering rod adjustment. Carter WCFB

Unloader Adjustment

With throttle valve wide open there should be $\frac{9}{16}$" clearance between lower edge of choke valve and inner wall of air horn. Adjust by bending cam on throttle lever.

CARTER WCFB-2220S, 2265S, 2563S, 2563SA

Idle and Choke Settings

Set idle mixture adjusting screws ¾ to 1¾ (1½ to 2½ on 2220) turns open. For richer mixture turn screws out.

Set automatic choke on "Index" mark.

Float Adjustments, Fig. 10

Vertical Adjustment—With bowl cover assembly inverted and bowl cover gasket removed, check the vertical distance from top of float to cover casting. This distance should be $\frac{3}{16}$". Adjust by bending float arms.

Float Drop Adjustment — With bowl cover assembly held in upright position, check distance between center of floats and bowl cover casting (gasket removed). This distance should measure ½" (plus or minus $\frac{1}{16}$"). Adjust by bending stop tabs on float brackets.

Lateral Adjustment—With metering rods removed, slide the cover assembly into position on the bowl casting. Note any interference between floats and carburetor bowl. If any interference exists, adjust by bending float arms.

Pump Adjustment, Fig. 11

Remove the dust cover from the bowl cover. Back out the fast idle screw and lever set screw until throttle valves seat in bores. With throttle valves seated, the flat on the top of the pump arm should be parallel with the top of the dust cover mounting boss. Adjust by bending the throttle connector rod at lower end. Pump connector link must be in outer hole in pump arm.

Metering Rod Adjustment, Fig. 12

This adjustment must always be made after the pump adjustment.

With the idle stop screw backed out and throttle fully closed, loosen the clamp screw on metering rod arm. Then press on vacumeter link until metering rods bottom in bowl. While holding metering rods down and throttle closed, rotate metering rod lift arm until finger on arm contacts lip of vacumeter link and tighten clamp screw in this position.

Vapor Vent Adjustment

This adjustment is to be made after the pump and metering rod adjustments.

With the dust cover and gasket installed and throttle valves wide open, there should be approximately $\frac{1}{16}$" clearance between the lower edge of the vent valve and dust cover. Adjust by removing the dust cover and bending the vapor vent arm.

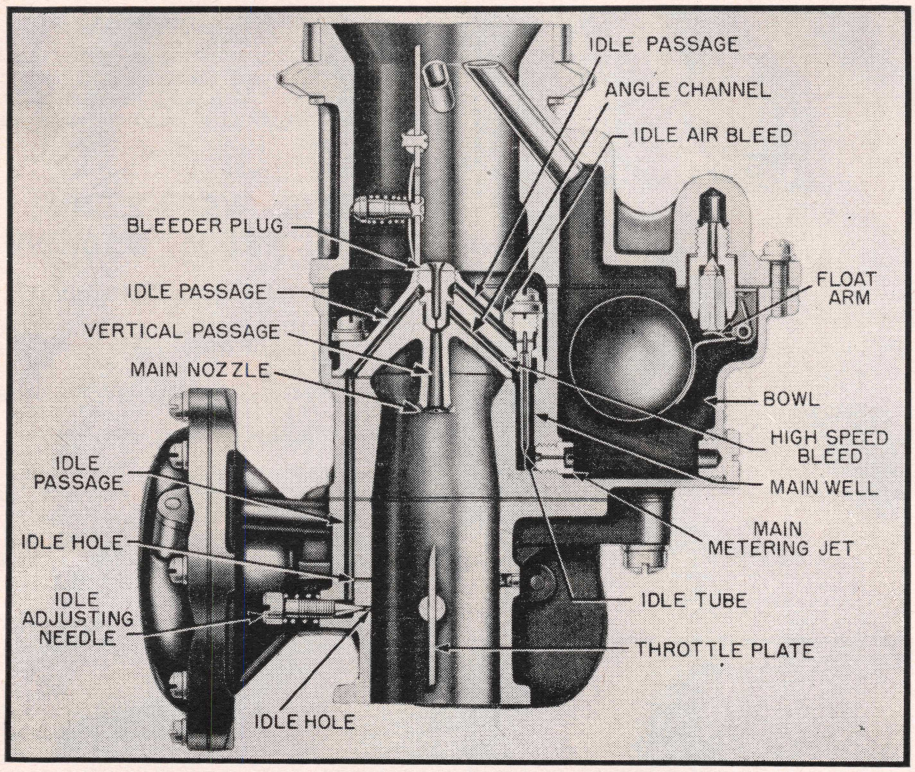

Fig. 13 Holley 852-FFG carburetor

HOLLEY 852-FFG

These carburetors are dual downdraft units incorporating an integral governor. The governor throttle mechanism is part of the carburetor and has been designed to provide the needed power required for moving the throttle to governing speeds as controlled by a separately driven governor rotor. The combination of these two units give instant response and accurate governing.

The carburetor and governor can be cleaned and serviced with ordinary tools and the governor rotor can be serviced independent of the carburetor. *Do not under any circumstances apply compressed air to an assembled carburetor as to do so may rupture the governor diaphragm.*

Fuel & Float Level

When checking the fuel level in an open vessel, under 5 lbs. pump pressure the level should measure $\frac{23}{32}$". The measurement is taken below the surface of the float chamber cover (gasket in place) to the level of the fuel. The level may be corrected by bending the float arm, Fig. 13.

The float level can be set when the air horn is off by gauging the distance between the bottom of the float and the flange surface of the air horn, Fig. 14. Holding the air horn upside down and the float in the closed position, measure the distance from the flange surface of the air horn to what would normally be the bottom side of the float (not the soldered seam). The correct distance should measure $1\frac{11}{32}$". Bend the float lever arm as required to correct the float level.

Idle Mixture

The idle mixture is controlled by the idle adjustment needles. Turning these needles in makes a leaner mixture and turning them out makes the mixture richer. Turn the needles in until they just touch the seats and back off one full turn.

When the engine has warmed up to operating temperature, alter the adjustment as required to obtain smooth performance. The range should be between 1 and 1½ turns.

Accelerating Pump

The quantity of the fuel discharged by the accelerating pump can be controlled by changing the position of the pump link in the throttle lever. Of the three different positions (marked 1, 2 and 3) number 2 is the average setting, number 1 is for summer and 3 is for winter operation.

ZENITH SERIES 28, 29

Float Setting, Fig. 16

Float setting should be checked by holding the cover assembly upside down. With the weight of the float holding the needle valve seated, the distance from the far side of the float of the housing should be as given below:

28 Series	1½"
29W14	$1\frac{5}{16}$"
29W16	$1\frac{45}{64}$"

Idle Adjustment

For a preliminary adjustment, turn the needle into its seat and open one full turn. Run the engine until it reaches operating temperature and alter the adjustment as required to obtain smooth performance. The range should be 1 to 1½ turns open.

Accelerator Pump

This adjustment is provided in the form of three grooves on the pump piston rod. The carburetor must be opened up and the vacuum pump piston assembly removed. Compress the spring toward the vacuum piston to permit moving the pump rod to the outer end of the slot in the pump piston base. At this point the slot is wide enough to permit removal of the rod.

There are three grooves near the end of the pump rod providing for three lengths of pump stroke. Install the pump piston in the groove nearest the end of the rod to obtain minimum or half stroke; center groove for intermediate stroke and in third groove for maximum stroke. The spring holds the rod in the center of the pump piston base.

CARBURETOR GOVERNOR

King-Seeley

This governor, Fig. 17, is mounted between the caburetor and intake manifold and automatically governs the maximum speed at which the engine may be operated.

The gas mixture rushing from the carburetor through the governor throat strikes the offset throttle valve and tends to draw it closed. This action is opposed by a governor spring which is attached to the valve shaft through a cam ribbon and cam. By adjusting the pull of this spring, the governor valve may be made to remain open, and then closed at a predetermined engine speed. Adjustment of the spring pull is accomplished by changing the number of coils operating.

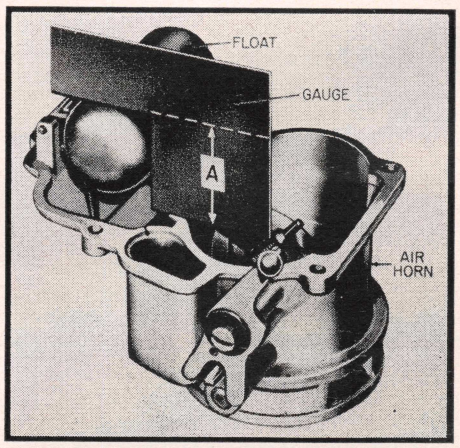

Fig. 14 Float setting. Holley 852-FFG carburetor

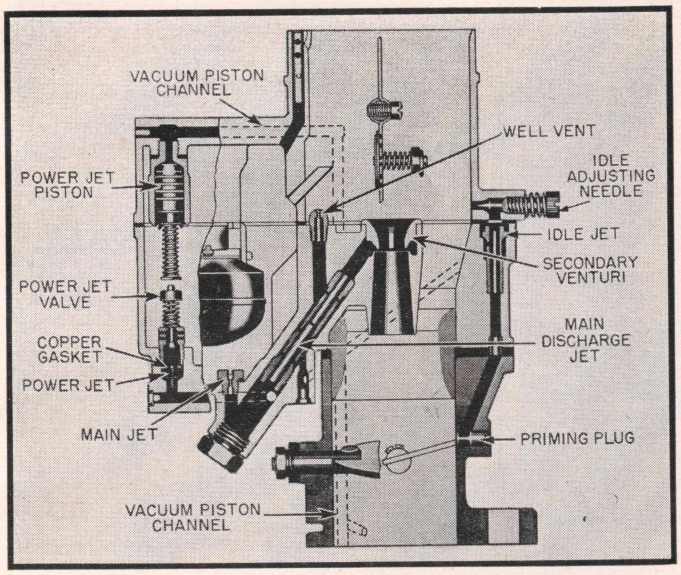

Fig. 15 Zenith 28 series carburetor

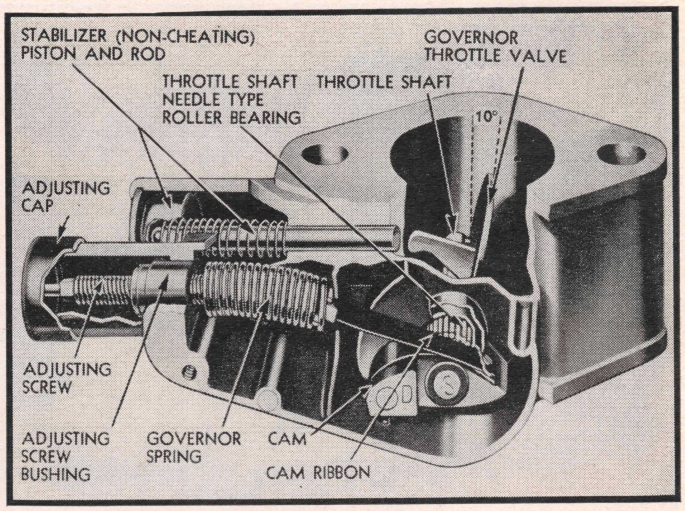

Fig. 17 King-Seeley (Handy) velocity type carburetor governor

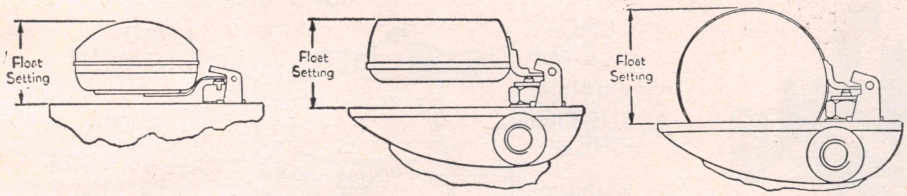

Fig. 16 Zenith carburetor float settings

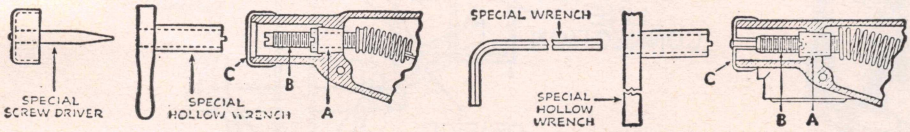

Fig. 18 King-Seeley governor adjustment

Adjustment

All governors are calibrated and adjusted in assembly to insure accurate control of the maximum engine speed of the model vehicle for which it is intended. However, there will be occasions when minor adjustments are required to satisfy local conditions where the truck is operating.

To adjust a governor for higher speed, turn the adjusting cap counter-clockwise or to the left; for lower speeds turn the cap to the right or clockwise. One turn on the adjusting screw will change the speed 300-400 rpm or between 4 and 5 mph.

When a more sensitive regulation is desired or if the governor is too sensitive and inclined to surge, correct the adjustment as follows by means of the calibrating nut shown at "A", Fig. 18.

If Governor is too Sensitive—If the governor is too sensitive or on the point of surging, remove the adjusting cap and hexagonal shaft assembly and place the special hollow wrench (A-24283) in position on nut "A". Insert the special adjusting wrench (A-25264) through this wrench and turn the main adjusting screw "B" to the right one turn. (These wrenches are available at King-Seeley Distributors.) With the hollow wrench in the slot of nut "A", turn this nut to the right about ¼ turn. The main adjusting screw "B" must be kept from turning while nut "A" is adjusted.

Holley Model 1174

Used with Holley carburetors, this governor, Fig. 19, is a vacuum controlled device featuring all the advantages of a mechanical governor without lengthy and complicated linkage. Should it become necessary to make any changes, proceed as follows:

To adjust the governor cut-off speed, remove the seal from the screw on the side of the governor housing and remove the screw. Rotate the engine until the end of the governor rotor, which carries the adjusting screw, is in line with the hole from which the screw was removed. Turn the adjusting screw clockwise to increase or counter-clockwise to decrease governed speed.

Whenever the governor has been disassembled and serviced, after reassembling turn the adjusting screw clockwise until it stops, then turn it counter-clockwise three full turns. Final adjustment is then made after the governor has been assembled to the engine.

The vacuum adjusting screw, Fig. 20, regulates the rpm spread between the governor full load cut-off speed and the no-load engine speed. Turning the screw clockwise will decrease the rpm spread. Turning it counter-clockwise will increase the spread. Changing the position of the screw will change the average governor speed and this should be corrected by the rotor adjusting screw.

ENSIGN LPG CARBURETOR

Model XG

This unit, Fig. 21, is known as a straight through carburetor, having a built-in economizer and easy starting feature. The economizer automatically produces a rich power mixture for high engine loads and a lean economy mixture for part throttle operation. The easy starting feature provides a separate set of air-gas orifices which produce a more positive mixture for starting only. This mechanism will be wide open or completely closed; it is not intended to function at intermediate speeds.

In operation, air enters the carburetor at slightly below atmospheric pressure as controlled by the regulating unit. Gas flows through the carburetor nozzles, into the venturi and is regulated by the main gas load adjusting screw. Air entering the carburetor air horn mixes with gas in the venturi before passing into the inlet manifold. The throttle disc controls the volume of combustible mixtures entering the engine, hence also controls engine speed and power.

Adjustments

1. Set the starting screw 2½ turns open.
2. Set load adjusting screw 6½ turns open.
3. Set idle adjustment screw (on regulator) 2 turns open.
4. Close the choke.

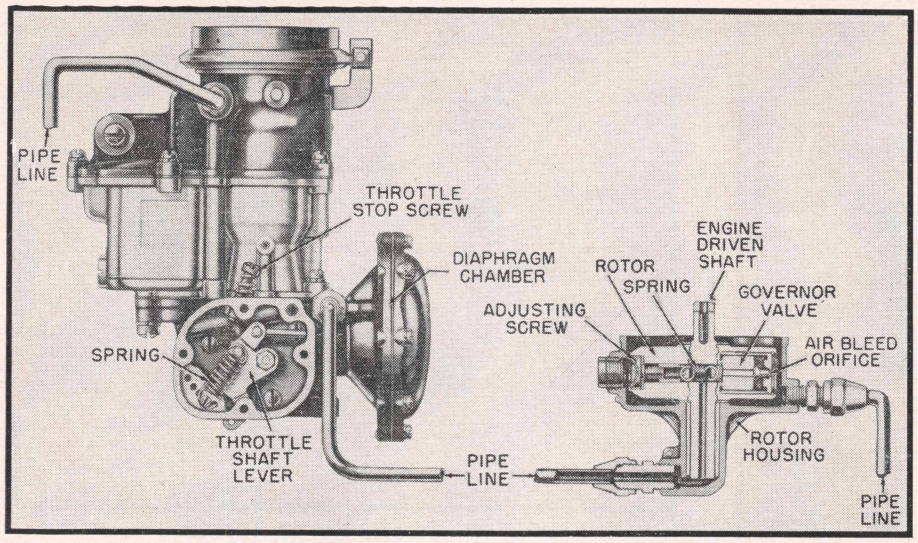

Fig. 19 Holley governor. Model 1174

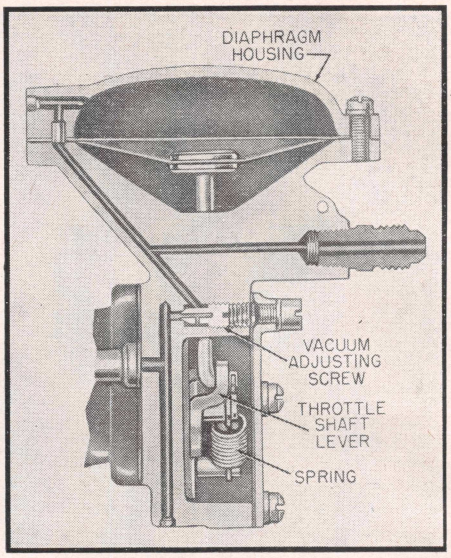

Fig. 20 Vacuum adjustment. Holley 1174 governor

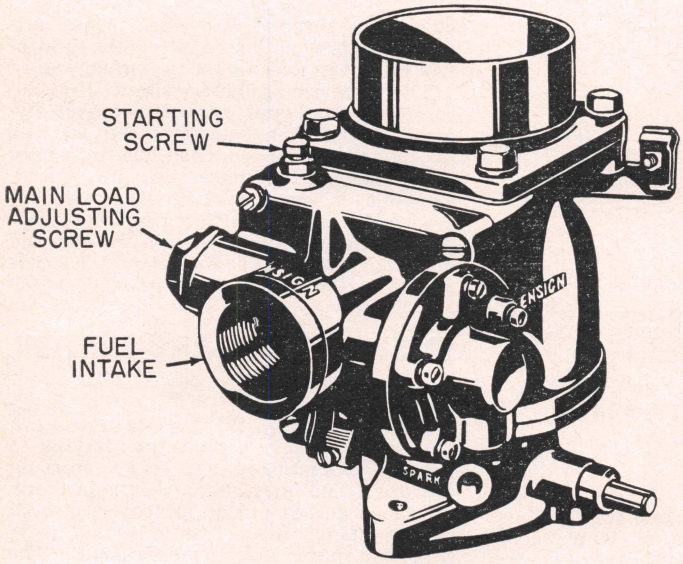

Fig. 21 Ensign XG carburetor

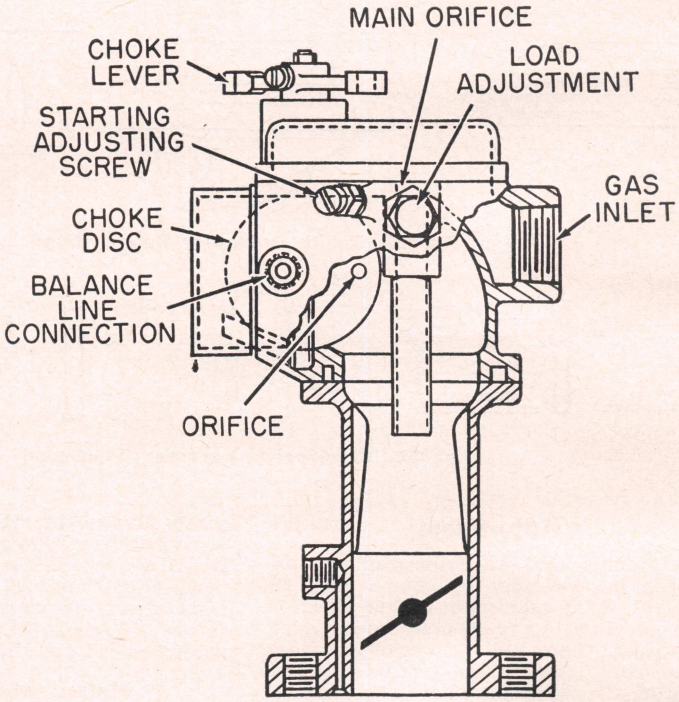

Fig. 22 Ensign KGL carburetor

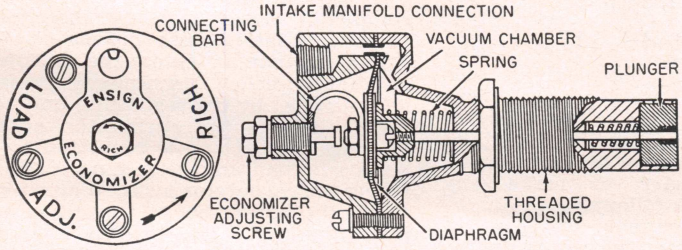

Fig. 23 Ensign gas economizer used on KGL carburetor

5. Open throttle at least halfway.
6. Crank the engine.
7. When engine starts, adjust starting adjustment first for maximum engine speed, then richer until speed drops slightly. Tighten lock nut.
8. Open choke and close throttle simultaneously.
9. Make temporary adjustment of load screw for highest rpm, holding throttle at about two-thirds rated speed (2400 rpm).
10. With engine warm, set idle stop screw for correct idle speed (450 rpm) and adjust idle screw for best idle.

Setting Load Screw With Analyser

Open throttle wide and load engine to obtain an engine speed of from ½ to maximum operating speed (1700-3400 rpm). Keep speed below any governor action. Set the load screw to give a reading of 12.8 on a gasoline scale or 14.3 on an analyser with an LPG scale.

To check the part throttle analyser reading, a vacuum gauge should be used. With engine under load, set the throttle to give a manifold vacuum of 10 to 13 at similar speed to previous check. The analyser should then read 13.8 to 14.5

gasoline scale or 14.9 to 15.5 on LPG scale.

Recheck idle adjustment (12 to 12.8 gasoline scale or 13.5 to 14.2 LPG scale) or best idle.

Setting Load Screw Without Analyser

Open the throttle wide and load the engine to obtain an engine speed of ½ maximum operating speed (1700 rmp), keeping speed below any governor action. Find the two load screw settings where the engine speed begins to drop, when going richer and leaner, and set at the mid-point. Recheck the idle.

Setting Load Screw Without Load

A reasonable adjustment can be made when it is not possible to place a load on the engine as follows: Disconnect economizer and plug intake manifold connection. Bring the engine to high speed. Adjust load screw to maximum rpm, then carefully screw in to a point where the rpm just begins to fall. Set the screw to the mid-point of these two positions and tighten lock nut. The idle adjustment must be carefully made before using this method as it influences the mixture under this engine condition.

Model KGL

This unit, Fig. 22, is similar in design to the XG unit except that it has an adjustable economizer instead of the fixed orifice type used on the XG unit. Note that the KGL model is equipped with a long, detachable throttle body.

Fig. 22 illustrates the complete carburetor in running position. To start, the choke disc is closed, cam lever closing the main orifice. Air is drawn through the orifice in the choke disc and gas is drawn through the orifice at the starting adjusting screw position. This starting gas mixture is adjusted with the starting adjusting screw which should then be locked when best position is found.

The choke lever is used in changing from starting to running position.

The load adjustment regulates the passage of gas through the main fuel orifice When once properly adjusted, the load adjusting screw should be locked in position.

On the carburetor used by Reo the load adjustment screw is replaced by a Gas Economizer assembly and the adjustment is made by turning the entire assembly in or out, Fig. 23.

The gas inlet is connected to the gas outlet of the Ensign fuel regulator or butane regulator unit. The "balance line" connection on the carburetor to a point on the fuel regulator compensates for increased air cleaner resistance, thereby maintaining a correct mixture over the entire engine operating range.

Gas Economizer

The gas economizer, Fig. 23, is an attachment to the carburetor utilized for the purpose of decreasing fuel consumption. This is accomplished by using the engine vacuum to automatically reduce the flow of fuel through the main fuel orifice whenever the engine is operating at less than 80% of full power. It regulates the flow of gas through the main fuel orifice by varying the size of the opening as the engine vacuum fluctuates with power demand.

The economizer is disassembled by removing the five cover screws. The body assembly is made up permanently and cannot be taken apart. It should be cleaned of any oil or dirt that may be present.

The only part that may need replacing is the diaphragm. When assembling be sure the diaphragm connecting bar is engaged in the groove in the adjusting screw.

Carefully check vacuum control connections to economizer for air leaks.

KGL Adjustments
Preliminary Idle Adjustment

Screw the idle adjustment in (for lean) or out (for rich) until a good smooth idle is obtained. This may be checked by means of manifold vacuum; the best idle is at the highest vacuum.

Power Adjustment

The power settings are for average operating conditions but may in some cases require a slight readjustment. With economizer adjustment screwed all the way in, adjust for best power at full throttle. Shorting out all but two cylinders will give about the right rpm for full throttle while making this adjustment. (If engine is equipped with governor it may be necessary to short out all but one cylinder to insure full throttle opening.) Loosen the lock screw on the dial and rotate the adjustment dial clockwise for rich, and counter-clockwise for lean. The correct adjustment for maximum power will be found at a point where rpm is the highest. If an exhaust analyser is used, meter should read approximately 13 to 1 at highest rpm.

Economizer

Remove short-out wires so all cylinders are firing. With no load on engine, open throttle until rpm is ¼ to ½ rated rpm (3350 rpm). Turn out economizer screw gradually until engine has reached peak rpm at this throttle setting and begins to slow down. Then turn screw back in until peak rpm is resumed and tighten lock nut. The throttle should be set by the throttle stop screw so that the throttle opening is constant. This setting will give good economy.

If the adjustment is screwed out too far the cruising mixture will be too lean for efficient operation. However, if this setting is too rich, poor economy will result.

Final Idle Adjustment

With main jet and economizer set as above, adjust the idle screw for best and smoothest idle. The throttle stop screw is set for desired idle rpm (450). Making this final idle adjustment will not affect the power and economizer settings.

Clutch, Transmission & Rear Axles

For Clark, Fuller, New Process, Reomatic, Spicer and Warner transmissions used on Reo trucks, see the "name" chapter for service procedures and lubricant capacities

For Eaton and Timken (Rockwell) driving axles used on Reo trucks, see the "name" chapters for service procedures and lubricant capacities

BORG & BECK

These clutches, Fig. 1, are single plate, dry disc types with no internal provision for adjustment for wear. However, each release lever is adjusted individually to the correct height, and no attempt should be made to adjust these levers unless the clutch is to be dismantled for overhaul. Overhauling the clutch should not be attempted unless a clutch rebuilder is available. Lacking this equipment it is recommended that the clutch cover and pressure plate assembly be exchanged for a rebuilt unit.

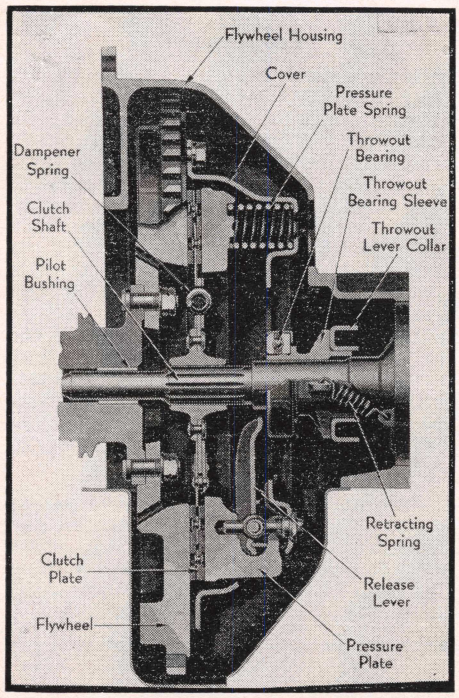

Fig. 1 Borg and Beck clutch

Clutch Pedal, Adjust

The general procedure for adjusting the clutch pedal is to shift the pedal down away from the toe board until the clearance or free movement is ¾" to 1". The pedal pad should come in contact with the toe board when the pedal is pressed down. If it does not move that far, making it necessary to spring the pedal to make the pad touch the toe board, shift the pedal down a little more.

Press the pedal down and note the distance the release bearing travels after it comes in contact with the release levers. To obtain a clean release the levers should be pushed toward the flywheel $\frac{7}{16}$". If it does not travel this distance shift the pedal up, bearing in mind that the pedal pad must touch the toe board as above.

Clutch Assembly, Replace

After removing the transmission, but before removing the clutch, mark with a punch the flywheel, clutch cover and pressure plate so that these parts may be assembled in their same relative positions and in the same position on the flywheel if the same clutch is to be reinstalled. This is important because they are balanced as an assembly.

To remove the clutch, pull out the clutch release bearing and sleeve. Unfasten the clutch cover from the flywheel, loosening each cap screw a few turns in succession until the cover is free. The clutch assembly and driven disc can then be removed from the flywheel.

When installing the clutch, coat the pilot bearing in the end of the crankshaft with wheel bearing grease. Clean the surfaces of the flywheel and pressure plate, making certain no oil or grease remains on these parts. Hold the cover plate and disc in place and insert a special clutch aligning tool or a spare clutch shaft through the hub of the disc and into the pilot bearing in the crankshaft. Bolt the clutch cover loosely to the flywheel, being sure the punch marks previously made are lined up. To avoid distortion of the clutch cover, tighten the cover bolts a few turns each in progression until all are tight. Guide the transmission into place, using care to see that the driven disc is not bent. Use a floor jack to support the transmission so that the clutch shaft may be guided through the driven disc safely. Adjust the clutch pedal free travel.

LONG CF

This type clutch, Figs. 2 and 3, employs centrifugal force to increase the pressure against the pressure plate and clutch plate at higher speeds, in addition to using conventional spring pressure. The release levers are provided with small centrifugal weights which are integral parts of the levers. As the clutch rotates at high speeds, these heavy ends of the levers tend to move outward and exert additional pressure against the pressure plate.

Clutch Control, Adjust

Unless the clutch control linkage is removed, the only adjusment is the length of the clutch release rod or rods. Before any adjustments are made, first make certain that the pedal shaft and throwout shaft operate freely. The pedal shaft is equipped with bushings and lubricated through grease fittings in the bearing housings. The throwout shaft

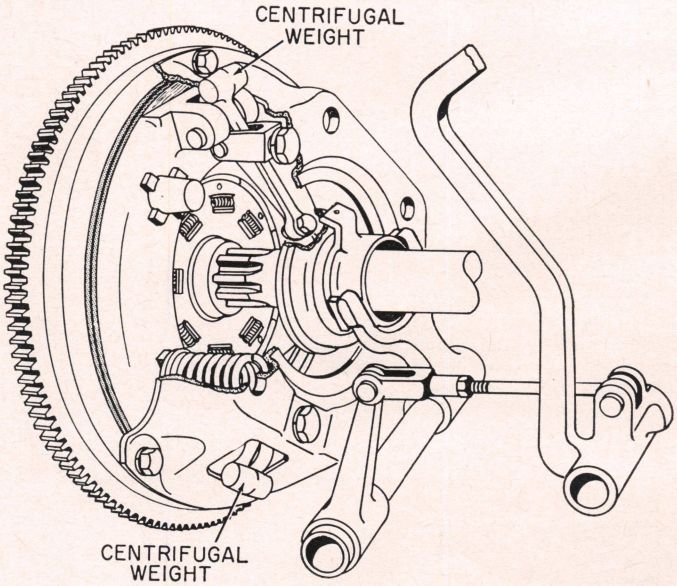

Fig. 2 Cutaway of Long CF semi-centrifugal clutch

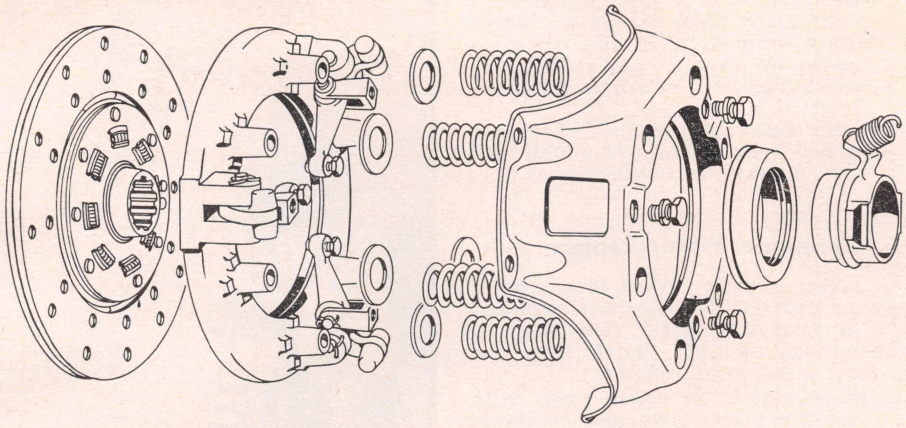

Fig. 3. Layout of Long CF clutch parts

operates in the clutch housing with grease fittings in the clutch housing.

This rod ajustment is made to obtain proper clearance and thus compensate for normal lining wear. With the foot pedal in its normal raised position, the length of the rod or rods is adjusted to obtain a minimum of $\frac{1}{16}''$ free movement between the working face of the clutch throwout bearing and the clutch release levers. This will represent a free movement of the clutch pedal of about $1\frac{1}{2}''$. Lengthen or shorten the rod or rods to maintain free play at the pedal to insure $\frac{1}{16}''$ clearance at the throwout bearing.

Clutch, Replace

When removing the clutch assembly, after removing the transmission, care should be taken to back out the six attaching screws about three turns at a time successively. This will prevent the clutch cover from being distorted by permitting the tension of the clutch pressure springs to be held by two or three screws.

Do not permit the weight of the transmission to hang on the driven disc for if it is bent it will necessitate excessive pedal travel to release the clutch.

Upon installing, always use a pilot shaft through the driven disc. When assembling the clutch to the flywheel, turn all attaching screws in finger tight. Then tighten each screw with a wrench not over two turns at a time. Go from one side of the clutch to the other until all attaching screws are tightened securely.

Clutch Service

The three release levers are properly set in a parallel plane and permanently locked at assembly. They will require no further attention during the life of the clutch, and they cannot be serviced. The pressure springs are set on asbestos base insulator washers where they rest on the pressure plate.

LIPE-ROLLWAY TYPE ML

This clutch, Fig. 4, is a single plate, dry disc type in which pressure on the driven disc is provided by a heavy spiral spring acting through 20 interlocked levers.

Clutch Adjustment

The original setting of the clutch provides for $1\frac{1}{2}''$ free movement of the clutch pedal. As the facings wear the clutch sleeve moves toward the clutch release bearing, reducing the clearance and automatically cutting down on the free travel of the clutch pedal. When this travel drops to about $\frac{1}{2}''$, the clutch should be readjusted.

Never wait for the clutch to start slipping before adjusting it. It may then be too late to make an adjustment. Clutch facings quickly disintegrate once they become burned through slippage, and both the facings and pressure plate are short lived thereafter.

Do not adjust the clutch pedal linkage until the clutch has been adjusted to the correct Dimension "A", Fig. 5. The correct Dimension "A" for the clutches used are as follows. *Clutches may be identified by the manufacturers' number stamped on a name plate or on the cover or flywheel ring.*

Clutch No.	Dimension "A"	Shims Req. [1]
Z30s	1″	6
Z32s	$1\frac{1}{16}''$	6

[1] Removal of one shim .015″ thick is equivalent to reducing Dimension "A", by $\frac{3}{32}''$. The number of shims listed for each clutch should be placed under each strap when overhauling the clutch.

1. To adjust the clutch, block the clutch pedal in the depressed position. This is important, otherwise the straps and studs may become bent.
2. Back off adjusting nuts five full turns.
3. Remove pedal block. This will allow the adjusting plate to move out of contact with the adjusting shims.
4. Remove a sufficient number of shims to obtain Dimension "A". It is usually sufficient to remove only

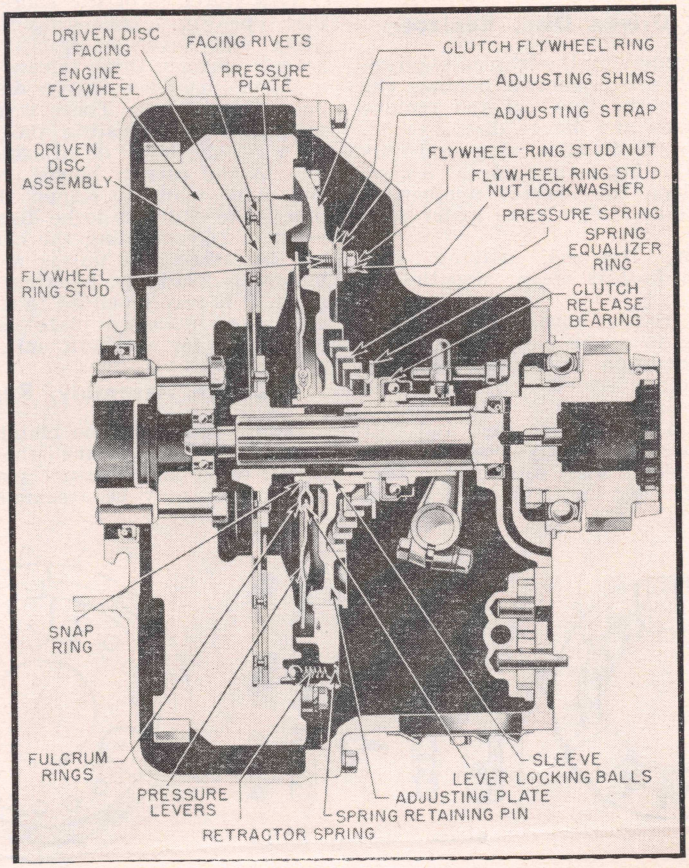

Fig. 4 Lipe-Rollway clutch

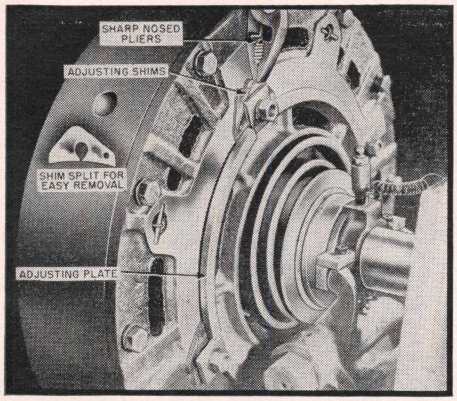

Fig. 6 Removing clutch adjusting shims

one shim from each stud, Fig. 6, then checking Dimension "A" before removing more. *Be sure no portion of the shim is torn and remains under the flange of the adjusting plate and that an equal number of shims remain under each strap.*

5. Reblock the clutch pedal. This moves the adjusting plate into contact with the adjusting shims. Then tighten each adjusting strap nut firmly.
6. Recheck Dimension "A".
7. After the correct Dimension "A" has been established, adjust the vehicle clutch release linkage so as to obtain proper release bearing clearance or 1/8" to 5/32".

Clutch Driven Disc, Replace

1. After removing the transmission remove the cap screws holding the clutch to the flywheel and remove the clutch and driven disc.
2. Remove the flywheel ring stud nuts and adjusting straps one at a time and place the correct number of shims (see table above) under each strap.
3. Examine flywheel, making sure friction face is clean, smooth and dry.
4. Check release bearing and pilot bearing to make sure they are in good condition. Both these bearings are factory sealed and require no further lubrication.
5. Install a new driven disc and bolt the clutch to the flywheel, using a spare splined shaft to align the disc. When bolting the flywheel, screw in each bolt until it just contacts the cover plate, then gradually tighten alternate bolts until the clutch is drawn up evenly against the flywheel. Tighten remaining clutch-to-flywheel bolts.
6. After clutch is installed, check for proper release. Adjust clutch and pedal linkage as outlined above.

Pressure Plate, Replace

A pressure plate dished in excess of .015" or badly scored should be replaced with a new part. After removing the transmission and the clutch from the flywheel, proceed as follows:

1. Place clutch on arbor press with pressure plate down and compress spring as far as possible.
2. Remove four retractor springs after first removing pins.
3. Slowly release arbor press, allowing clutch spring to return to normal position.
4. Holding clutch assembly together by hand, turn it over and carefully lift off pressure plate.
5. Install new pressure plate, turn clutch assembly over and compress in arbor press.
6. See that retractor springs are in place and install pins.
7. Remove clutch from press and reinstall on flywheel.

ROCKFORD TYPE TT

This clutch is of the single plate dry disc type, Fig. 7, consisting of a pressure plate and cover assembly having 12 release springs, three release levers and a spring-cushioned driven disc mounted on a splined hub. There is no internal provision for adjusting the clutch but each release lever is adjusted individually to the correct height. No attempt should be made to adjust these levers unless the clutch is to be dismantled for overhaul. Overhauling the clutch should not be attempted unless a clutch rebuilder is available. Lacking this equipment, it is recommended that the clutch cover and pressure plate assembly be exchanged for a rebuilt unit.

Clutch Assembly, Replace

Before removing the clutch from the flywheel, punch mark the flywheel, clutch cover and pressure plate so that these parts may be assembled in their same relative positions and in the same position on the flywheel if the same clutch is to be reinstalled. This is important because they are balanced as an assembly.

After removing the transmission, pull out the clutch release bearing and sleeve. Unfasten the clutch cover from the flywheel, loosening each cap screw a few turns in succession until the cover is free. The clutch and driven disc can then be removed from the flywheel.

When installing the clutch, coat the pilot bearing in the end of the crankshaft with wheel bearing grease. Clean the surfaces of the flywheel and pressure plate, making certain no oil or grease remains on these parts. Hold the cover plate and disc in place and insert a special clutch aligning tool or a spare clutch shaft through the hub of the disc and into the pilot bearing in the crankshaft. Bolt the clutch cover loosely to the flywheel, being sure the punch marks previously made are lined up. To avoid distortion of the clutch cover, tighten the cover bolts a few turns in progression until all are tight. Guide the transmission into place, using care to see that the driven disc is not bent. Use a floor jack to support the transmission so that the clutch shaft may be guided through the driven disc safely.

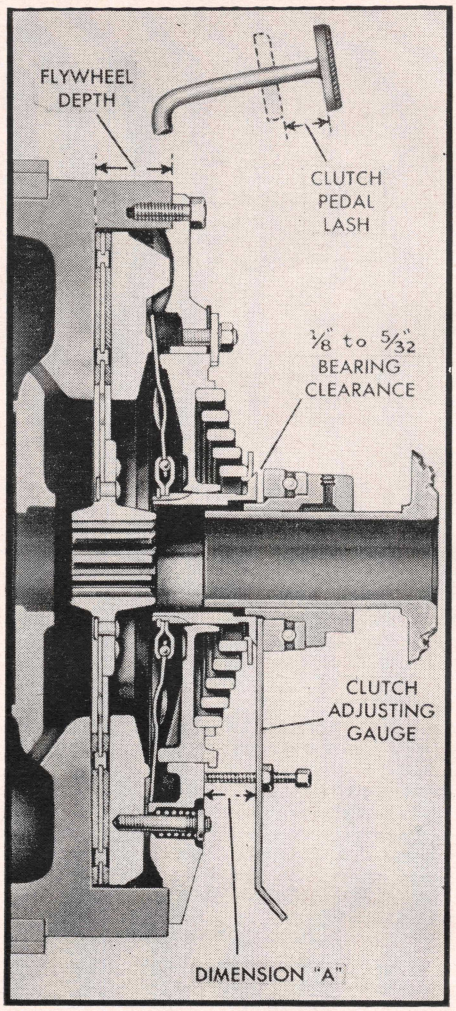

Fig. 5 Lipe-Rollway clutch adjustments

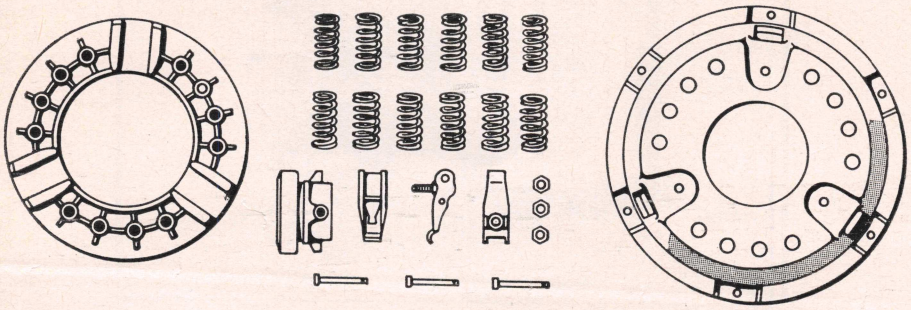

Fig. 7 Rockford Type TT clutch

ALLISON REOMATIC

Range Selector Linkage

1. Move range selector lever from L to R. Six definite detent positions should be felt as the lever moves from front to rear. If not, adjust as follows:
2. Place selector lever at R.
3. At transmission, disconnect range selector cable from transmission control lever.
4. Push control lever (inner lever on transmission) all the way forward and upward.
5. Push control cable up until the selector lever hits the R stop. Adjust threaded clevis so that clevis pin just fits hole in control lever.
6. Assemble clevis to control lever.
7. From driver's seat, again feel for full engagement at each detent position before the lever hits its stop.

Hydraulic Retarder Linkage

The retarder valve, located on the right side of the transmission, must travel a full ½" toward the rear just before the retarder pedal hits the stop bolt. When pedal is released, the valve must travel ½" to cross shaft to insure full return of pedal. If necessary, adjust as follows:

1. Disconnect hydraulic control rod at transmission end. Pull retarder lever toward rear until the valve is heard and felt to bottom in the retarder valve body. Pull control rod down until pedal contacts its stop bolt.
2. With retarder valve bottomed and pedal against its stop, adjust control rod clevis until the clevis pin just fits into the lever hole.
3. Lengthen control rod by backing off adjusting clevis until there is ⅛" clearance between pedal and its stop bolt at full retarder application.
4. Assemble control rod to lever and recheck adjustment by depressing pedal against the stop bolt. Just before it hits the stop, the retarder valve should be felt to bottom in its body.
5. Check for full release and readjust if necessary.

Throttle Linkage

1. Check engine idle adjustment (475-500 rpm).
2. Disconnect throttle control rod from transmission TV (outer) lever.
3. Depress accelerator pedal down "to detent" (not "through detent"). The carburetor lever should now be against its full throttle stop.
4. Push transmission TV lever forward and upward until it is against its stop inside transmisson. With TV lever firmly against the stop, and the accelerator pedal "at detent", adjust throttle control rod clevis so that pin just fits through holes.
5. Remove pin and lengthen control rod by turning clevis out 7 turns counterclockwise.
6. Assemble clevis to control lever.
7. Adjust accelerator stop bolt so that there is a clearance of $\frac{1}{16}$" between pedal and bolt head when throttle linkage hits its stop "through the detent". This will provide full travel in the linkage without undue deflection.

Road Test

After making the throttle linkage adjustment outlined above, road test the truck to check the operation of the transmission.

1. If the 3-4 full throttle ("at detent") shift occurs at an engine speed considerably under governed speed, it is probable that the throttle linkage is not properly adjusted. Shorten the throttle control rod at the transmission lever one full turn at a time and repeat the test until the shift occurs at 3100-3300 rpm engine speed.
2. If full throttle 3-4 shift did not occur, and the engine reached governed speed, it is probable that the throttle linkage is too short and should be lengthened one full turn at a time until the shifts occur at 3100-3300 rpm engine speed.
3. Governed speed with the OH-170 engine should be 3400 rpm full load and 3550-3650 rpm no load.

Steering Gear Section

ROSS CAM & LEVER

These gears, Figs. 1, 2 and 3, are the cam and lever type in which the cam is mounted on ball bearings and the lever shaft turns on steel backed bronze bushings.

As the cam is turned by the wheel tube, the follower studs are pulled along the cam groove causing the lever arm to rotate the lever shaft. As an aid to easy steering the lever shaft studs which engage the cam are mounted on tapered roller bearings. The groove in the cam is cut shallower in the straight-ahead driving position to provide closer adjustment between the studs and the cam where most of the steering action occurs.

Cam End Play, Adjust

1. Free the steering gear of all load by disconnecting the drag link and loosening the steering column braces.
2. Loosen the lock nut and adjusting screw in the side cover to free the studs in the cam groove.
3. Remove the upper cover stud nuts and raise the housing upper cover to permit removal of the adjusting shims, which are .002", .003" and .010" thickness.
4. Clip and remove one thin shim, tighten down the cover and check the adjustment. There should be a slight drag but the steering wheel should turn freely with the thumb and forefinger lightly gripping the rim. If necessary, remove or replace shims until the adjustment is correct.

Lever Shaft Backlash, Adjust

1. Centralize the steering gear by turning the wheel all the way to the right. Then starting from this point count the number of turns required to reach end of travel to the left. Turn the wheel back half this number of turns to the mid-position.
2. Tighten the side cover adjusting screw until a very slight drag is felt through the mid-position when turning the steering wheel slowly from one side to the other. The gear should not bind in any position but a slight drag should be felt in the mid-position only.
3. After proper adjustment is secured, tighten lock nut and give the gear a final check for binding.

Stud Roller Bearing, Adjust

In most cases the foregoing adjustments will be adequate but it is sometimes necessary to adjust the stud roller bearing units as they should be preloaded at all times. A heavy drag should be felt when revolving the studs by hand. If a torque wrench is available the bearings should be adjusted so that the torque required to revolve the stud is as follows:

Lever Shaft Dia.	Torque, In. lb.
1⅜"	3-4
1½"	3-4
1⅝"	4-8
1¾"	5-11

1. To adjust, remove lever shaft from housing, wash the bearings in solvent and blow dry with compressed air, using care not to spin the bearings. Lubricate the bearings with light oil.
2. Straighten out the prong of the locking washer to release the stud nut. Remove the nut and install a new locking washer.
3. While holding the stud nut from turning with a spanner wrench on the locking washer, tighten the nut as required to revolve the stud in accordance with the table above.
4. When proper adjustment has been secured, bend the prong of the washer against a side of the nut to keep it from turning.
5. Lubricate the bearings with gear oil and assemble the lever shaft in the steering gear housing.

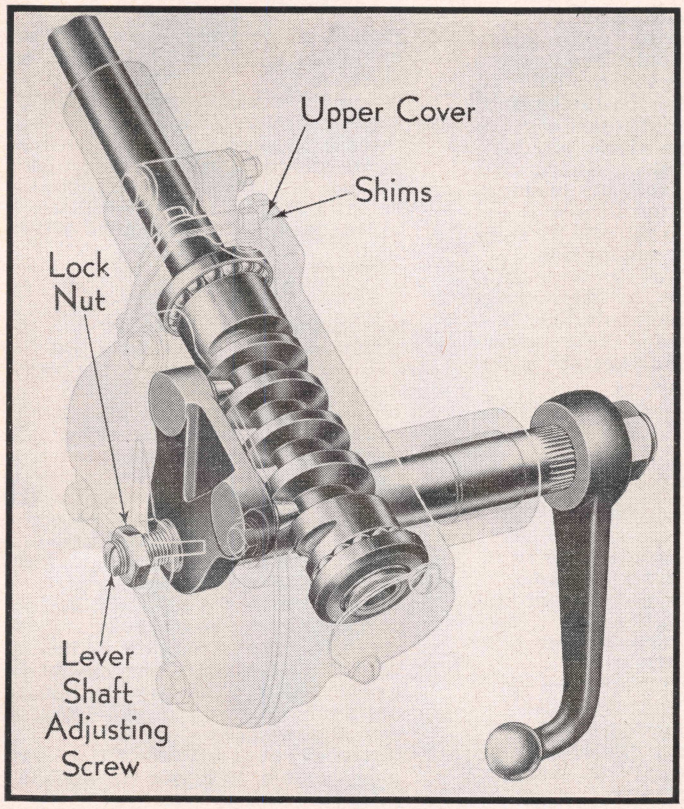

Fig. 1 Ross cam and lever steering gear with twin studs

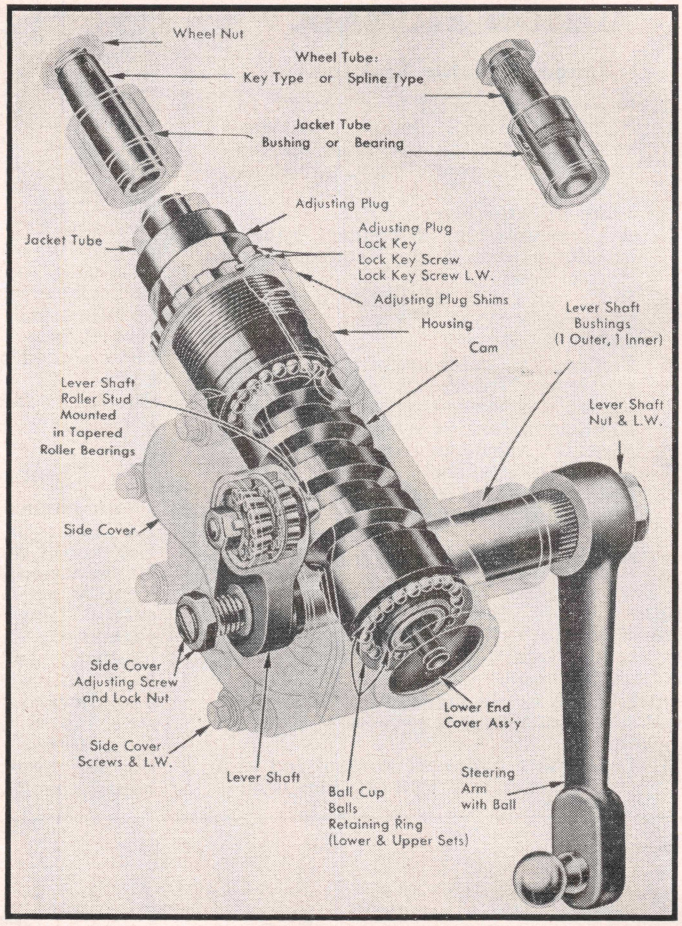

Fig. 2 Ross cam and lever steering gear with single roller bearing mounted stud

GEMMER WORM & ROLLER GEAR

Means for mechanically eliminating all play within the mechanism have been provided. There is no need of being forced to choose between a stiffly operating unit and one having lost motion, since all of the adjustments can be set at the will of the adjuster at the most desirable point, with external adjustments.

In this type of gear, Fig. 4, the worm adjustment is accomplished with the use of shims. The need for adjustment, however, should present itself only after considerable usage.

Before altering any adjustments, jack up front wheels of car and make sure that cause of complaint is not from some other looseness such as ball sockets, and so forth. Then make the following test.

Inspection for Proper Worm Bearing Adjustment

Turn hand wheel about one turn to right from straight ahead driving position. Secure in this position to prevent any oscillation when front wheels are shaken violently. This can be done by tying one spoke to a left side door column and holding the wheel against it as a brace. Grip column with other hand just below hand wheel hub with side of finger barely touching lower end of hand wheel hub. Now have helper shake front wheels hard sidewise. This will enable any end play in worm bearings

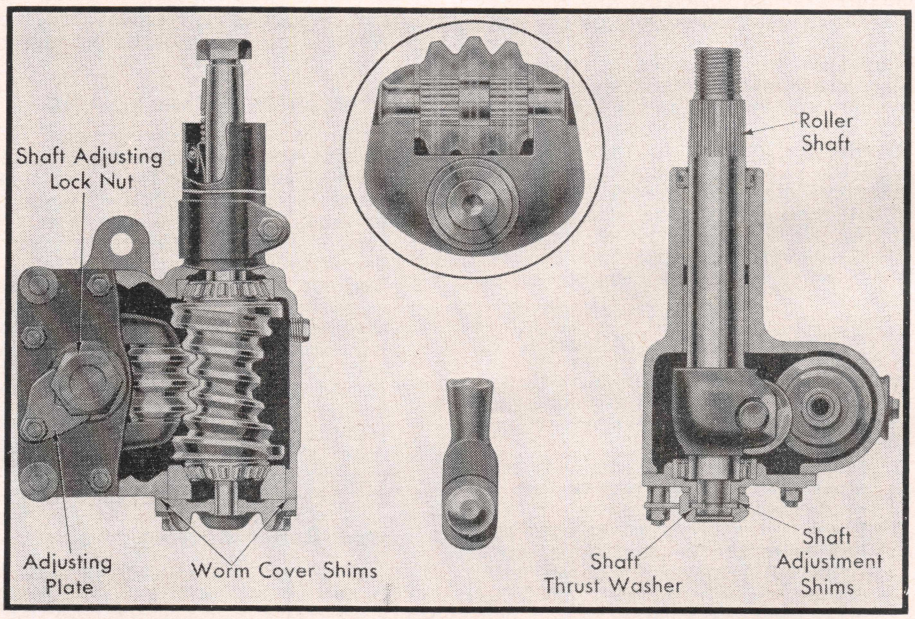

Fig. 4 Gemmer worm and roller steering gear

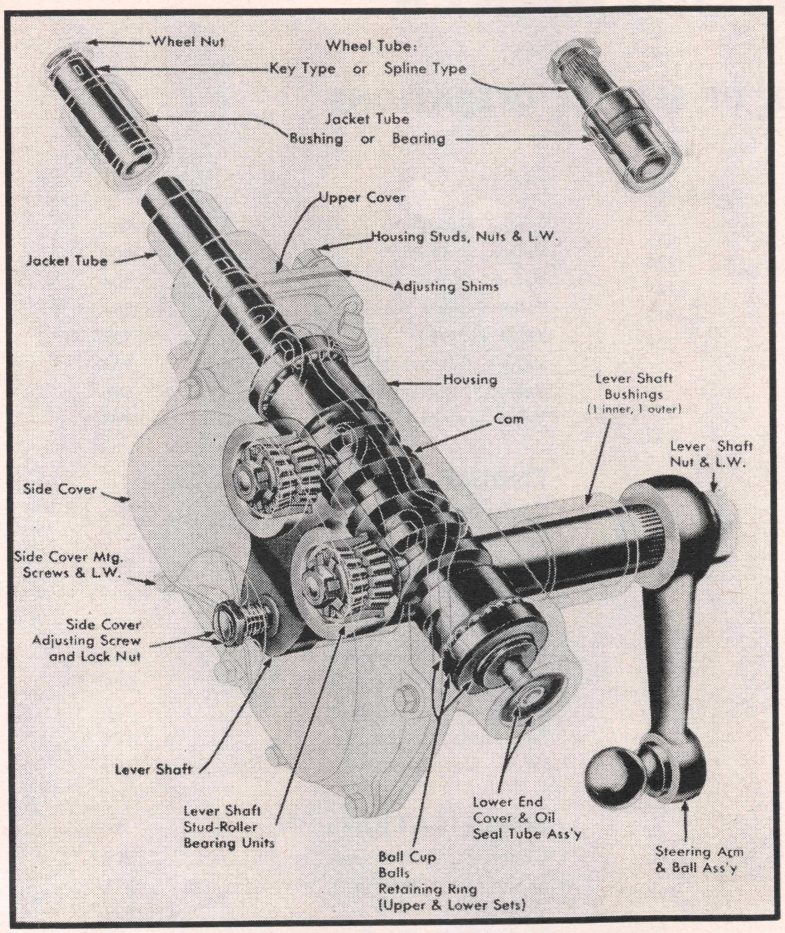

Fig. 3 Ross cam and lever steering gear with twin roller bearing mounted studs

to be felt at wheel hub. If any end play exists, worm bearings need adjusting. Be sure end play is felt, and not be confused with play or give in jacket bushing. Worm bearing adjustment should be correct before further inspection of gear is made.

Worm Bearing Adjustment

Loosen four worm cover screws 1/8 inch, Fig. 4. Use a knife to separate the top shim, passing blade all the way around between shims, care being taken not to mutilate the remaining shims. Remove only one shim at a time between inspections, to remove end play. Care should be taken not to set up stiffness in worm bearings.

It is important the drag link be removed from steering gear ball arm in order to effect a satisfactory inspection of other adjustments and alignment of gear in vehicle. Now revolve hand wheel to determine if any stiffness exists. If so, too many shims have been removed or gear is misaligned in vehicle.

Correction of Gear Misalignment

Loosen the frame bracket bolts just enough to allow gear to shift in frame to line up at angle determined by height setting of instrument board gear bracket and retighten frame bracket bolts. Now loosen instrument board gear bracket and allow it to shift to match gear column position, and retighten. This will correct any possible misalignment of gear column.

Inspection for Proper Mesh of Shaft Roller in Worm

Never make inspection for proper mesh, without first correcting column adjustment and gear alignment. Turn hand wheel to the mid-position of its complete travel or turning limits. (Drag link previously disconnected.) Most hand wheels have a trade mark or large depression on the underneath side of the spoke that should now point straight upward, or straight down, whichever location is nearest to the mid-position. Place this marked spoke in correct position and shake ball arm to determine amount of lost motion. If this lost motion exceeds 1/32" at end of ball arm, roller shaft adjustment should be made.

Before drag link is again connected to steering gear ball arm, swing front wheels throughout their turning radius to determine if any tight spots exist. There should not be more than 10 lbs. pull on drag link either fore or aft throughout entire turning radius.

Use puller only to remove ball arm. Any other means will damage adjustment parts.

Roller Shaft Mesh in Worm Series 335-375

Adjustment for closer mesh of the shaft roller with the worm or, in other words, elimination of excessive play at this point, is accomplished by outside roller shaft adjustment screw. The position of roller contact with worm is offset from the center line of worm, hence when screw is tightened the roller is moved into closed mesh with the worm.

To adjust, remove roller shaft adjustment screw lock nut, slide off lock plate far enough to clear lock boss on roller shaft cover. Now be sure hand wheel is located in mid-position of wheel turns or straight ahead driving position and drag link previously disconnected. Tighten roller shaft adjustment screw just enough to remove play between roller shaft roller tooth and worm. Check this by amount of play felt at end of ball arm. It is better to leave a slight amount of play at this point than to tighten too much.

When tightened beyond the point of taking up lash, serious results will occur that are a detriment to continued good steering gear results.

Now slide lock plate in position against roller shaft cover and in locked position. Replace roller shaft adjustment screw lock nut and tighten.

Roller Shaft Mesh in Worm Series 400-500

Adjustment for closer mesh of the shaft roller with worm or in other words, elimination of excessive play at this point, is accomplished from the outside. The position of roller contact with worm is offset from the center line of worm, hence when roller is moved closer to worm center line, play is eliminated.

To adjust, be sure hand wheel is located in mid-position of wheel turns or straight ahead driving position and drag link previously disconnected. Now remove roller shaft adjustment lock nut plate and nut, slip off U shaped shaft thrust washer and one shim, (note there are two thickness of shims to permit close adjustment). Select the proper amount of shims to take out all play in this position without increasing the pull at hand wheel rim more than one pound over what it was when there was play between worm and roller in this center position. It is better to leave a slight amount of play between roller and worm than to remove too much shim and setup a tight adjustment.

Lock nut must be tightened securely to prevent rotation of shims and thrust washer. (Note there are four different locking positions obtainable by reversing adjusting nut lock plate.) Select position that will leave Adjustment Nut tightened securely and replace lock washer and stud nut.

STUDEBAKER

INDEX OF SERVICE OPERATIONS

PAGE NO.

AXLES, DRIVING
Eaton Axle Service 176
Locking Differentials 169
Studebaker Axles 912
Timken Axle Service 209

BRAKES
Adjustments 252
Air Brake System 259
Hydraulic Brake System 250
Vacuum Brake Boosters 268

CLUTCH 911

COOLING SYSTEM
Cooling System Capacity 895
Water Pump Repairs 908

ELECTRIC SYSTEM
Alternators & Regulators 37
Dash Gauge Service 93
Distributor Specifications 897
Distributor Service 7
Generator Specifications 898
Generator & Regulator Service 27
Ignition, Transistorized 22
Ignition Timing 908
Starting Motor Specifications 897
Starting Motor Service 65
Starter Switch Service 85

ENGINE
Camshaft 905
Crankshaft Bearing Specifications 896
Crankshaft End Play, Adjust 907
Crankshaft Oil Seal, Replace 907
Cylinder Head 899
Main Bearings, Replace 907
Piston Pins, Replace 906
Piston Rings, Replace 906
Piston & Ring Specifications 896
Pistons & Rods, Remove 905
Piston & Rod, Assemble 905
Pistons, Replace 906
Rocker Arm Service 900
Rod Bearings, Replace 906

PAGE NO.

Timing Gears 905
Valves, Adjust 902
Valves, Grind 904
Valve Guides, Replace 904
Valve Lifters 905
Valves, Remove 903
Valve Specifications 896
Valve Springs 904

ENGINE OILING
Crankcase Capacity 895
Crankcase Ventilation 6
Oil Pump Repairs 908

FUEL SYSTEM
Carburetor Adjustments 909
Carburetor Service Notes 909
Crankcase Ventilation 6
Fuel Pump Service 104
L.P.G. Carburetion 109

SPECIFICATIONS
Carburetor Adjustment 909
Crankshaft & Bearing 896
Distributor 897
Engine Tightening Torque 897
Generator & Regulator 898
Piston, Pin & Ring 896
Starting Motor 897
Tune Up 896
Valve 896
Wheel Alignment 898

STEERING GEARS 914

TRANSFER CASES 242

TRANSMISSIONS
Clark 110
Fuller 122
New Process 135
Spicer 141
Warner 164
Powermatic 281

TUNE UP SERVICE 2

MODEL INDEX & ENGINE APPLICATION

ENGINE IDENTIFICATION—Model and serial number is located on left side of cylinder block on six-cylinder engines; on V8's on cylinder block to left and front of oil filler tube.

Model	Year	Engine Make	Engine Model	Crankcase Refill Capacity, Qts.	Cooling System, Capacity, Qts.
3R5	1954	Own	1R	5	10
3R6	1954	Own	6R	6	15
3R10	1954	Own	1R	5	10
3R11	1954	Own	6R	6	15
3R14	1954	Own	6R	6	15
3R15	1954	Own	2R	5	10
3R16	1954	Own	4R	6	15
3R17	1954	Own	4R	6	15
3R28	1954	Own	VT	6	18
3R38	1954	Own	VT	6	18
E5	1955	Own	1E	5	10½
E6	1955	Own	4E	6	15½
E7	1955	Own	2E	6	20¼
E10	1955	Own	1E	5	10½
E11	1955	Own	4E	6	15½
E12	1955	Own	2E	6	20¼
E13-21	1955	Own	2E	6	20¼
E13-31	1955	Own	2E	6	20¼
E14-21	1955	Own	4E	6	15½
E14-31	1955	Own	4E	6	15½
E15-21	1955	Own	1E	5	10½
E15-31	1955	Own	1E	5	10½
E16	1955	Own	4E	6	15½
E16B	1955	Own	4E	6	15½
E17	1955	Own	4E	6	15½
E17B	1955	Own	4E	6	15½
E28	1955	Own	3E	6	20¾
E28B	1955	Own	3E	6	20¾
E38	1955	Own	5E	6	20¾
E38B	1955	Own	5E	6	20¾
2E5	1956	Own	1E	5	10½
2E6	1956	Own	4E	5	15½
2E7	1956	Own	2E	5	20¼
2E11	1956	Own	4E	5	15½
2E12	1956	Own	2E	5	20¼
2E13	1956	Own	3E	5	20¾
2E14	1956	Own	4E	5	15½
2E28	1956	Own	3E	5	20¾
2E38	1956	Own	5E	5	20¾
3E5	1957–58	Own	1E	5	10½
3E6, 6D	1957–58	Own	4E	5	16½
3E7, 7D	1957–58	Own	3E①	5	20¾
3E10	1957–58	Own	1E	5	10½
3E11, 11D	1957–58	Own	4E	5	16½
3E12, 12D	1957–58	Own	3E①	5	20¾
3E13	1957–58	Own	3E②	5	21¼
3E14	1957–58	Own	4E	5	16½
3E16	1957–58	Own	4E	5	16½
3E17	1957–58	Own	4E	5	16½
3E28	1957–58	Own	3E②	5	21¼
3E38	1957–58	Own	5E	5	21¼
3E40	1957–58	Own	6E	5	21¼
4E1	1959	Own	1E	5	10½
4E2, 2D	1959	Own	5E	5	20¼
4E3, 3D	1959	Own	5E	5	20¼
4E5	1959	Own	1E	5	10½
4E6, 6D	1959	Own	4E	5	16½
4E7, 7D	1959	Own	3E②	5	20¼
4E11, 11D	1959	Own	4E	5	16½
4E12, 12D	1959	Own	3E②	5	20¼
4E13, 13D	1959	Own	3E②	5	20¾
4E14, 14D	1959	Own	4E	5	16½
4E16	1959	Own	4E	5	16½
4E28	1959	Own	3E②	5	20¾
4E40	1959	Own	6E①	5	21¼
5E5	1960	Own	1E	5	10½
5E6	1960	Own	4E	5	16½
5E7	1960	Own	3E②	5	20¾
5E11	1960	Own	4E	5	16½
5E12	1960	Own	3E②	5	20¾
5E13, 13D	1960	Own	3E②	5	20¾
5E14, 14D	1960	Own	4E	5	16½
5E16	1960	Own	4E	5	16½
5E28	1960	Own	3E②	5	20¾
5E40	1960	Own	6E	5	21¼
6E5	1961	Own	1E	5	11
6E7	1961	Own	3E②	5	17
6E10	1961	Own	1E	5	13½
6E12	1961	Own	3E②	5	17
6E13, 13D	1961	Own	3E②	5	20¾
6E28	1961	Own	3E②	5	20¾
6E40	1961	Own	6E	5	21¼
7E5	1962	Own	1E	5	10½
7E7	1962	Own	3E②	5	20¾
7E10	1962	Own	1E	5	10½
7E12	1962	Own	3E②	5	20¾
7E13	1962	Own	3E②	5	20¾
7E28	1962	Own	3E②	5	20¾
7E35	1962	GM	4–53		18
7E40	1962	Own	6E	5	21¼
7E45	1962	GM	4–53		18
8E5	1963	Own	1E	5	10½
8E7	1963	Own	3E	5	20¾
8E10	1963	Own	1E	5	10½
8E12	1963	Own	3E	5	20¾
8E13	1963	Own	3E	5	20¾
8E15	1963	GM	3–53		18
8E25	1963	GM	3–53		18
8E28A	1963	Own	3E	5	20¾
8E28C	1963	Own	3E	5	20¾
8E35A	1963	GM	4–53		18
8E35C	1963	GM	4–53		18
8E40A	1963	Own	6E	5	21¼
8E40E	1963	Own	6E	5	21¼
8E45A	1963	GM	4–53		18
8E45E	1963	GM	4–53		18

①—When 259″ heavy duty engine is used in these models the engine will be identified by a 5E engine number. Heavy duty engines are further identified by the stenciled clover leaf symbol on the engine number boss.

②—When 259″ heavy duty engine is used in these models the engine will be identified by a 5E engine number. When 289″ standard duty engine is used the engine will be identified by a 7E number. When 289″ heavy duty engine is used engine will be identified by a 6E engine number. Heavy duty engines will be further identified by the stenciled clover leaf symbol on the engine number boss.

GENERAL ENGINE SPECIFICATIONS

Year	Engine Model	No. Cyls. & Valve Location	Bore & Stroke	Piston Displacement Cubic Inch	Compression Ratio	Maximum Brake H. P. @ R. P. M.	Maximum Torque Lb. Ft. @ R. P. M.	Normal Oil Pressure, Lbs.
1952–54	1R, 2R	6 In Block	3.0000 x 4.000	170	7.00	75 @ 3600	133 @ 1600	40
1954	4R, 6R	6 In Block	3.3125 x 4.750	246	7.00	102 @ 3200	205 @ 1200	40
1954	VT	8 In Head	3.3750 x 3.250	233	7.50	125 @ 4000	202 @ 2000	40
1955–58	1E	6 In Block	3.0000 x 4.375	185	7.50	92 @ 3800	152 @ 1800	40
1959–60	1E	6 In Block	3.0000 x 4.000	170	8.00	75 @ 3600	133 @ 1600	40
1961–63	1E	6 In Head	3.0000 x 4.000	170	8.00	75 @ 3600	133 @ 1600	40
1955–56	2E	8 In Head	3.5625 x 2.812	224	7.50	140 @ 4500	202 @ 2800	40
1955–63	3E, 5E	8 In Head	3.5625 x 3.250	259	7.50	141 @ 3800	225 @ 2400	40
1955–60	4E	6 In Block	3.3125 x 4.750	246	7.50	106 @ 3400	204 @ 1400	40
1957–63	6E, 7E	8 In Head	3.5625 x 3.625	289	7.50	154 @ 3800	260 @ 2400	40

TUNE UP & VALVE SPECIFICATIONS

Year	Engine Model	Firing Order	Spark Plugs		Ignition Timing		Valve Seat Angle Degrees	Valve Clearance H—Hot C—Cold		Valve Spring Pressure Lb. @ Inch Length
			Type⑤	Gap	Timing Mark	Location		Intake	Exhaust	
1952–53	1R, 2R	153624	J7	.025	IGN	Damper	45	.016C	.016C	81 @ 1 7/16
1954	1R, 2R	153624	J7	.030	IGN	Damper	45	.016C	.016C	98 @ 1 5/16
1954	4R, 6R	153624	J7	.030	IGN	Damper	45	.016C	.016C	②
1954	VT	18436572①	H10	.035	IGN	Damper	45	.022H	.024H	③
1955–60	1E	153624	J7	.030	IGN	Damper	45	.018C④	.018C④	130 @ 1 3/4
1961–63	1E	153624	J7	.035	IGN	Damper	45	.024H	.024H	110 @ 1 43/64
1955–56	2E	18436572①	H10	.035	IGN	Damper	45	.024H	.024H	110 @ 1 11/16
1955–63	3E, 5E	18436572①	H10	.035	IGN	Damper	45	.024H	.024H	110 @ 1 11/16
1955–60	4E	153624	J7	.030	IGN	Damper	45	.018C④	.018C④	130 @ 1 3/4
1957–63	6E, 7E	18436572①	H10	.035	IGN	Damper	45	.024H	.024H	110 @ 1 11/16

① Cylinder numbering (front to rear): Left bank 1–3–5–7, right bank 2–4–6–8.
② Intake valves 130 @ 1 3/4", exhaust valves with roto cap 125 @ 1 1/2".
③ Intake valves 110 @ 1 11/16", exhaust valves 110 @ 1 11/32".
④ If valve covers are marked .016, disregard and set at .018.
⑤—Champion. Normal service.

PISTON, PIN, RING, CRANKSHAFT & BEARING SPECIFICATIONS

Year	Engine Model	Wristpin Diameter	Piston Clearance, Inch	Ring End Gap, In. (Minimum)		Crankpin Diameter, In.	Rod Bearing Clearance, In.	Main Bearing Journal Diameter, In.	Main Bearing Clearance, Inch	Thrust On Bearing No.	Shaft End Play
				Comp.	Oil						
1952–54	1R, 2R	.750	.002①	.007	.007	1.81175–1.81275	.0005–.002	2.437–2.4375	.0005–.0025	③	.003–.006
1954	4R, 6R	.875	.002②	.008	.008	2.18675–2.18775	.0005–.002	2.8745–2.8750	.0005–.0025	③	.003–.006
1954	VT	.875	.002①	.008	.008	1.99925–2.00025	.0005–.002	2.4995–2.5000	.0005–.0025	③	.003–.006
1955–63	1E	.750	.002①	.007	.007	1.81175–1.81275	.0005–.0025	3.0623–3.0628	.0005–.0025	③	.003–.006
1955–56	2E	.875	.002①	.008	.008	1.99925–2.00025	.0005–.0025	2.4995–2.5000	.0005–.0025	③	.003–.006
1955–63	3E, 5E	.875	.002①	.008	.008	1.99925–2.00025	.0005–.0025	2.4995–2.5000	.0005–.0025	③	.003–.006
1955–60	4E	.875	.002②	.008	.008	2.18675–2.18775	.0005–.0025	2.8745–2.8750	.0005–.0025	③	.003–.006
1957-63	6E, 7E	.875	.002①	.008	.008	1.99925–2.00025	.0005–.0025	2.4995–2.5000	.0005–.0025	③	.003–.006

① Using a 1" wide feeler a pull of 11 to 16 lbs. on a spring scale should be necessary to withdraw the feeler past the piston.
② Using a 1" wide feeler a pull of 14 to 19 lbs. on a spring scale should be necessary to withdraw the feeler past the piston.
③ Controlled by shims at front main bearing.

Unit Part No. ①	Rotation ②	Brush Spring Tension, Oz.	No Load Test			Torque Test		
			Amperes	Volts	R. P. M.	Amperes	Volts	Torque Lb. Ft.
MDG-6004	C	42–53	50	10.0	4400	210	4.0	5.0
MDM-6003	C	31–47	50	10	4400	210	4.0	5.0
MDM-6007	C	31–47	50	10	4400	210	4.0	5.0
MZ-4090	C	42–53	68	5.0	4000	280	2.0	4.4
1107084	C	24–28	70	5.65	5500	550	3.25	11
1107089	C	24–28	65	5.67	5000	525	3.37	12
1107115	C	24–28	70	5.65	5500	550	3.25	11
1107116	C	24–28	70	5.65	5500	550	3.25	11
1107650	C	35 Min.	75	10.3	6900	435	5.8	10.5
1107651	C	35 Min.	75	10.3	6900	435	5.8	10.5
1107666	C	35 Min.	75	10.3	6500	435	5.8	10.5

① Stamped on plate riveted to housing. ② As viewed from drive end.

ENGINE TIGHTENING SPECIFICATIONS★

★Torque specifications are for clean and lightly lubricated threads only. Dry or dirty threads produce increased friction which prevents accurate measurement of tightness.

Engine	Spark Plugs Ft. Lbs.	Cylinder Head Bolts Ft. Lbs.	Intake Manifold Ft. Lbs.	Exhaust Manifold Ft. Lbs.	Rocker Arm Shaft Bracket Ft. Lbs.	Rocker Arm Cover Ft. Lbs.	Connecting Rod Cap Bolts Ft. Lbs.	Main Bearing Cap Bolts Ft. Lbs.	Flywheel to Crankshaft Ft. Lbs.	Vibration Damper or Pulley Ft. Lbs.
1R, 2R	25–30	46–50	18–22	18–22	None	None	28–32	88–93	33–35	130–140
4R, 6R	25–30	80–85	25–30	25–30	None	None	52–54	88–93	33–35	160–170
VT	25–30	46–50	25–30	25–30	46–50	①	52–54	88–93	33–35	130–140
1E, 6-170②	25–30	46–50	25–30	25–30	None	None	28–32	85–95	33–35	130–140
1E, 6-170③	25–30	46–50	25–30	25–30	13–17	④	28–32	85–95	33–35	130–140
1E, 6-185	25–30	46–50	18–22	18–22	None	None	50–55	88–93	33–35	130–140
2E	25–30	55–65	26–30	25–30	55–60	①	52–54	85–95	33–35	130–140
3E, 5E	25–30	55–65	26–30	25–30	13–17	①	52–54	85–95	33–35	130–140
4E, 6-245	25–30	55–65	25–30	25–30	None	None	52–54	85–95	33–35	130–140
6E, 7E	25–30	55–65	26–30	25–30	55–60	①	52–54	85–95	33–35	130–140

① 8-10 in. lbs. ② Side valve engine. ③ Overhead valve engine. ④ 20 inch lbs.

DISTRIBUTOR SPECIFICATIONS

Unit Part No. ①	Rotation ②	Cam Angle, Degrees	Breaker Gap, In.	Condenser Capacity, Mfds.	Breaker Arm Spring Tension, Oz.	Centrifugal Advance Deg. @ RPM of Dist.		Vacuum Advance		
						Advance Starts	Full Advance	Inches of Vacuum to Start Plunger Movement	Inches of Vacuum for Full Plunger Travel	Maximum Vacuum Advance, Dist. Degrees
IAT-4010	CC	37–41	.020	.21–.25	17–20	1 @ 550	7 @ 1400	4	12	9
IAT-4201	CC	37–41	.020	.21–.25	17–20	1 @ 550	7 @ 1400	4	12	9
IAT-4403	CC	37–41	.020	.21–.25	17–20	0 @ 400	7 @ 1400	4	12	8.5
IAT-4403A	CC	37–41	.020	.21–.25	17–20	0 @ 400	7 @ 1400	4	12	8.5
1110220	CC	31–37	.022	.20–.25	19–23	1 @ 500	10 @ 1400	3–5	9–14	6
1110229	CC	31–37	.022	.20–.25	17–21	1 @ 550	7 @ 1400	3–5	12½	9
1110839	CC	28–34	.013	.20–.25	19–23	1½ @ 350	16 @ 1450	4–6	10.5–12.5	7–8
1110864	CC	28–34	.013–.018	.20–.25	19–23	1 @ 500	14 @ 1100	5	11	8
1110969	CC	26–33	.016	.20–.25	17–21	1 @ 300	12 @ 1150	5	12	8

① Stamped on plate riveted to housing. ② As viewed from top; CC—Counter-clockwise.

GENERATOR & REGULATOR SPECIFICATIONS

★To Polarize Generator: For internally grounded systems, disconnect field lead from regulator and momentarily flash this wire to regulator battery terminal. For externally grounded systems, connect jumper wire from "hot" side of battery to armature terminal of generator.

Generator						Regulator					
							Cutout Relay				
Gen. No. ①	Rotation and Ground Polarity ③	Brush Spring Tension, Oz.	Rated Cap. Amps.	Gen. Field Ground Location★	Field Current	Reg. No. ②	Closing Voltage	Arm. Air Gap, In.	Voltage Setting	Current Setting	Current & Voltage Reg. Arm. Air Gap, In.
GGW-4801A	C-P	35–53	45	External	1.4–1.5④	VBE-6101A	6.3–6.8	⑦	7.2	45	.048–.052
GGW-4801C	C-P	35–53	45	External	1.4–1.5④	VBE-6101A	6.3–6.8	⑦	7.2	45	.048–.052
GGW-4801E	C-P	35–53	45	External	1.4–1.5④	VBE-6101A	6.3–6.8	⑦	7.2	45	.048–.052
GJC-7002F	C-N	18–36	30	External	1.2–1.3⑨	VBO-4202B	13.1	.032	14.5	35	.050
GJC-7002G	C-N	18–36	35	External	1.2–1.3⑨	VRX-6008A	13.4	⑦	14.6	30	.048–.052
GJC-7102C	C-N	18–36	30	External	1.2–1.3	VBO-6201A-1	13.4	⑦	14.6	30	.048–.052
1102003	C-N	28	30	External	1.48–1.62⑧	1119123	12.0	.020	15.0	30	.075
1102065	C-P	28	30	External	1.48–1.62⑧	1119123	12.0	.020	15.0	30	.075
1102728	C-P	28	30	External	1.75–1.95⑤	1118380	6.4	.020	7.2	36	.075
1102753	C-P	28	40	External	1.87–2.0⑤	1118392	6.4	.020	7.4	42	⑥
1102778	C-P	28	45	External	1.87–2.0⑤	1118828	6.4	.020	7.3	47	.075
1102787	C-P	28	45	External	1.87–2.0⑤	1118828	6.4	.020	7.3	47	.075

① Stamped on plate riveted to housing.
② Stamped on regulator base.
③ As viewed from drive end; C—Clockwise. P—Positive.
④ At 5 volts.
⑤ At 6 volts.
⑥ Voltage regulator air gap, .068″. Current regulator air gap, .075″.
⑦ Circuit breaker air gap, .031–.034″. Circuit breaker point opening, .015″ Min.
⑧ At 12 volts.
⑨ At 10 volts.

WHEEL ALIGNMENT SPECIFICATIONS

Model	Caster°	Camber°	Toe-In, Inch	Kingpin Angle°
2R SERIES, 1952-53				
5, 6, 10, 11	1¼–1¾	0–1	1/16–⅛	7½
14, 15	1¾–2¼	0–1	1/16–⅛	8
16A, 17A, 17B	2–2½	0–1	1/16–⅛	8
3R SERIES, 1954				
5, 6, 10, 11	1¼–1¾	0–1	1/16–⅛	7½
14, 15	1¾–2¼	0–1	1/16–⅛	8
16, 17, 28, 38	2–2½	0–1	1/16–⅛	8
E SERIES, 1955				
5, 6, 7, 10, 11, 12	1¼–1¾	0–1	1/16–⅛	7½
13, 14, 15	1¾–2¼	0–1	1/16–⅛	8
16, 17, 28, 38	2–2½	0–1	1/16–⅛	8
2E SERIES, 1956				
5, 7, 12	1¼–1¾	0–1	1/16–⅛	7½
13	1¾–2¼	0–1	1/16–⅛	8
28, 38	2–2½	0–1	1/16–⅛	8

Model	Caster°	Camber°	Toe-In, Inch	Kingpin Angle°
3E SERIES, 1957-58				
5, 6, 7, 11, 12	1¼–1¾	0–1	1/16–⅛	7½
13, 14	1¾–2¼	0–1	1/16–⅛	8
28, 38, 40	2–2½	0–1	1/16–⅛	8
4E SERIES, 1959				
1, 2, 7, 12	1¼–1¾	0–1	1/16–⅛	7½
7D, 12D, 13D	1¾–2¼	0–1	1/16–⅛	8
40	2–2½	0–1	1/16–⅛	8
5E SERIES, 1960				
5, 6, 7	1¼–1¾	0–1	1/16–⅛	7½
11, 12, 13, 14	1¾–2¼	0–1	1/16–⅛	8
16, 28, 40, 40B	2–2½	0–1	1/16–⅛	9①
6E, 7E, 8E SERIES, 1961-63				
5, 7, 10	1¼–1¾	0–1	1/16–⅛	7½
12, 13	1¾–2¼	0–1	1/16–⅛	8
28, 40	2–2½	0–1	1/16–⅛	9①

①—Heavy duty models 8½°.

①—Heavy duty models 8½°.

Engine Section

CYLINDER HEAD

V8 Engines

1. If the right bank head is to be removed, remove generator and oil level gauge. Disconnect oil pressure gauge line.
2. If left bank head is to be removed, remove water temperature indicator and place it back out of the way. Disconnect oil filter inlet pipe and the fuel pump oil line from the head. Remove the battery.
3. Remove carburetor air cleaner.
4. Disconnect throttle control lever-to-cross shaft rod.
5. Disconnect fuel pump-to-carburetor fuel line at fuel pump.
6. Disconnect vacuum line at distributor.
7. Disconnect automatic choke tube at carburetor.
8. If left bank head is to be removed, remove choke tube.
9. Unfasten intake manifold and lift it off with carburetor.
10. Remove rocker arm assembly as outlined further on.
11. Loosen the U-clamp at the joint between the cross-over pipe and exhaust connection, and the U-clamp at the clutch housing. Remove studs from both manifold flanges, which allows the cross-over pipe and exhaust connection to drop off the manifold studs.
12. Remove two screws at water pump flange at front of head.
13. Loosen water pump screws.
14. Lift out push rods.

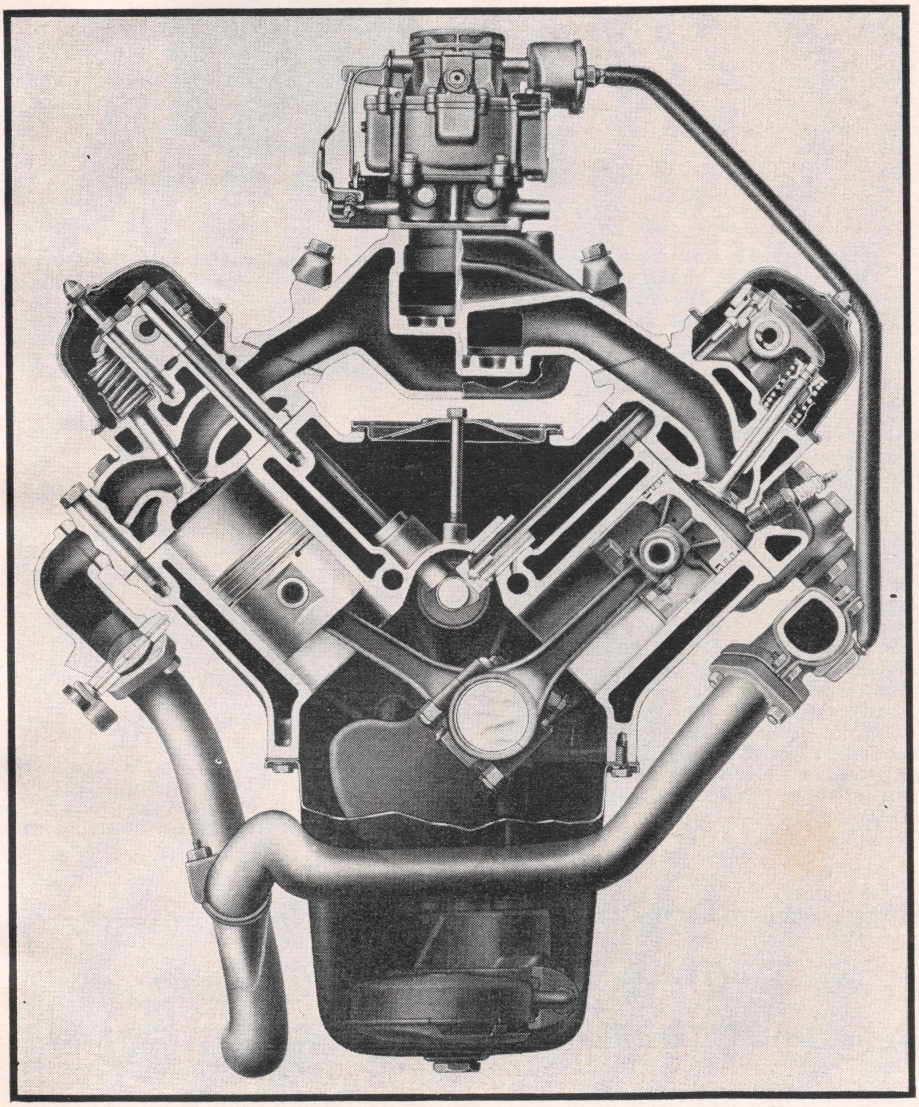

End view of V8 engine

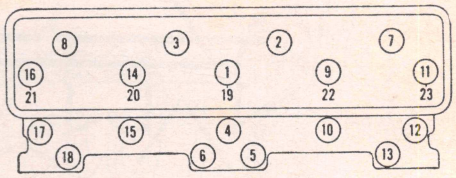

Fig. 1 Cylinder head tightening sequence. V8 engines

15. Remove cylinder head screws and lift the head with its exhaust manifold off the hollow dowels. Be sure manifold heater valve is not damaged when removing right bank head.

Installation Notes

Since the right and left bank cylinder heads are identical, water pump ports are provided at the front and rear of all heads. It is necessary to block off the rear port, the one not in use, with a dummy plate and gasket. When installing a new head, check the capscrews holding the plate to the head to be sure they are right. The heat indicator cylinder head unit is mounted in the left head dummy plate.

Clean the face of the cylinder block and head. File or hone all high spots. If the cylinder head is warped, etched or brinnelled in excess of .015 in., it should be replaced. If warpage or brinnelling is less than .015 in., it is permissible to plane it off up to .015 in. to correct the condition.

Make sure the cylinder head oil return passage through the hollow dowel is clear. The dowels are also used to align the head and gasket during installation.

Apply gasket seal to the head gasket and install the gasket. Be sure the main oil gallery-to-rocker arm oil passage at the rear of the right bank or front of the left bank is clear and not blocked by the gasket.

To avoid losing torque to overcome friction between threads, dip capscrews in engine oil before starting them in the cylinder block threads.

Install nine short screws in the two outer rows of holes in the head and the five medium length screws in the center row and tighten them finger tight. Install the rocker arm assembly with the long screws and tighten them finger tight. Insert and tighten the rocker arm studs, tightening them alternately so that the assembly is pulled down evenly. Then tighten the cylinder head capscrews in the order shown in Fig. 1, and to the torque given in the *Engine Tightening* table.

After completing the balance of the installation, recheck the torque of the cylinder head or heads.

If a new rocker arm or rocker arm adjusting screw has been installed, make sure the adjusting screw is in far enough not to hold the valve open when normally it should be closed.

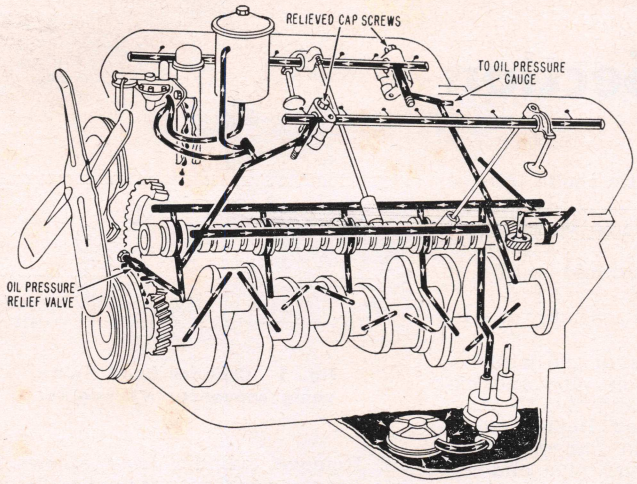

Engine lubrication diagram. Studebaker V8 engines

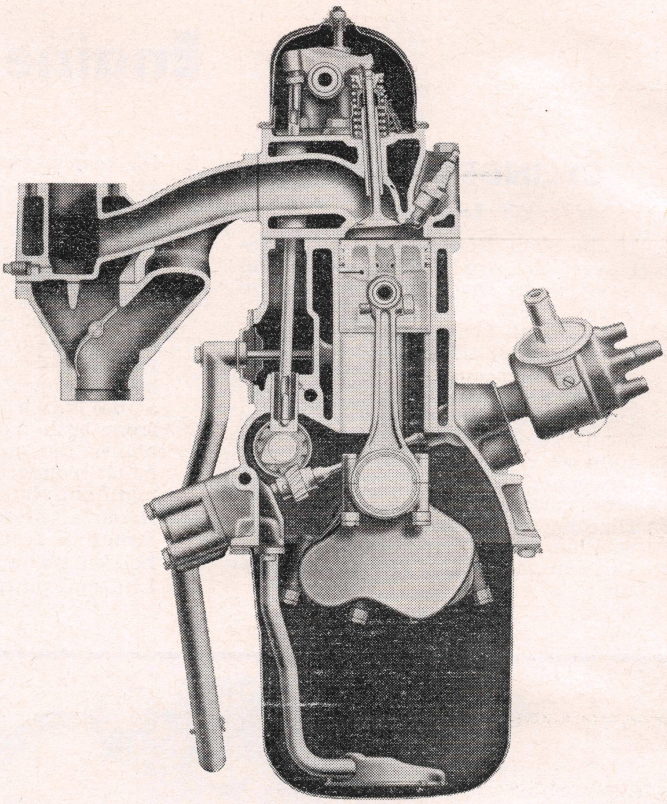

1961-63 overhead valve six cylinder engine

Start the engine and warm it up to approximately 160 degrees and torque the head in proper sequence to assure a tight and even seal of the gasket to the head and block.

Check the valve clearance and adjust if necessary. Adjust the throttle stop screw for proper idling.

1961-63 Six

1. Drain cooling system and remove upper radiator hose.
2. Remove rocker arm cover.
3. Remove spark plugs.
4. Remove manifold and carburetor as a unit.
5. Remove rocker arm shaft assembly.
6. Remove push rods.
7. Unfasten and remove head.
8. Reverse removal procedure to install head and tighten head bolts in the sequence shown in Fig. 2 to the torque listed in the *Engine Tightening Chart*.

L-Head Engines

The general procedure for removing the cylinder head is as follows:

1. Drain radiator.
2. Remove fuel line from carburetor to fuel pump.
3. Remove carburetor air cleaner.
4. Detach accelerator and choke controls at carburetor.
5. Remove carburetor.
6. If valve work is to be done, disconnect exhaust pipe from manifold and remove manifolds from engine.
7. Remove upper radiator hose, spark plugs, temperature gauge engine unit and cylinder head capscrews.
8. Lift cylinder head from block, using lifting hooks in two of the spark plug holes. Do not use a screwdriver, chisel or other sharp instrument to drive between the head and block to loosen the head as damage may result.

Installation Notes

Before the cylinder head is installed, make certain that all dirt and carbon is removed from both the head and block. File or hone all high spots.

If the cylinder head is warped, etched or brinnelled in excess of .015 in., it should be replaced. If warpage or brinnelling is less than .015 in., it is permissible to plane it off up to .015 in. to correct the condition.

Use a torque wrench when tightening cylinder head capscrews. Uneven or excessive tightening of nuts may distort cylinder bores, causing compression loss and excessive oil consumption.

Tighten cylinder head in the order shown in Figs. 3 and 4, tightening them a little at a time in the proper sequence a couple of times around before final tightening to the torque given in the *Tune Up* table. After the engine has warmed up to approximately 160 degrees, recheck the torque and tighten as required.

ROCKER ARM SERVICE

1961-63 Six

1. Before disassembly, mark the rocker arms, brackets and shaft so they can be reassembled in the original positions.
2. Hold rocker arm assembly and press on one end of the shaft end brackets and remove cylinder head capscrew from end bracket.
3. Gradually release compression of spring and carefully remove bracket, spacer, first rocker arm, compression spring and the next rocker arm from shaft.
4. Proceed in same manner to strip shaft of remaining parts.
5. Except when new parts are used, install all rocker arms and brackets on shaft in original positions. The two end brackets differ from the

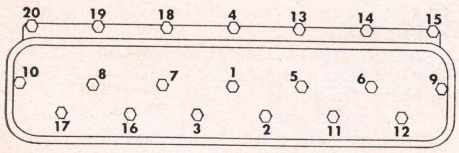

Fig. 2 Cylinder head tightening sequence. 1961-63 overhead valve six

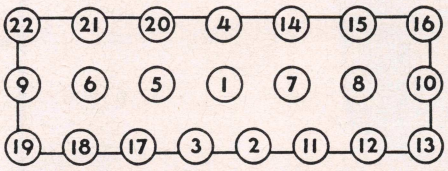

Fig. 3 Head tightening chart on Side valve 6-170 and 6-185 engines

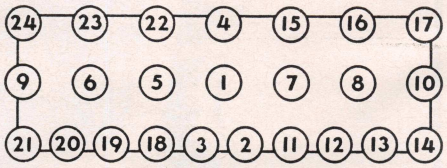

Fig. 4 Head tightening chart on 6-246 engines

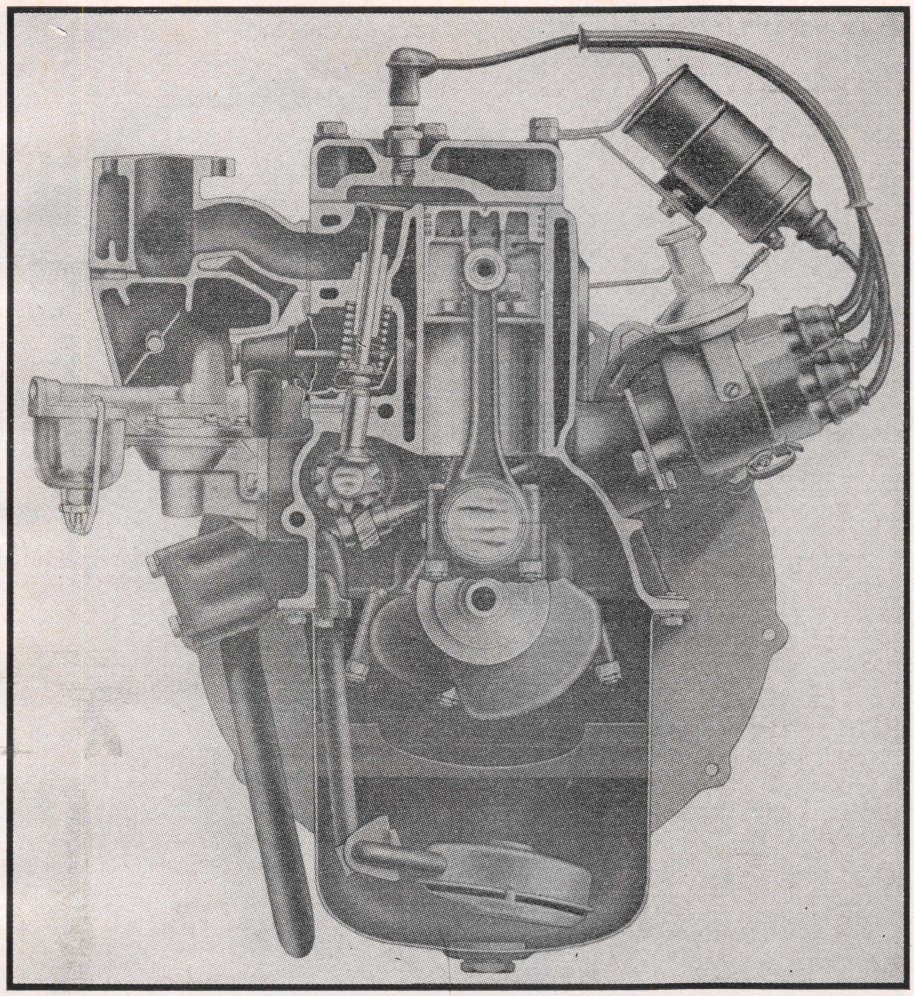

End view of 170 and 186 cu. in. six-cylinder engines

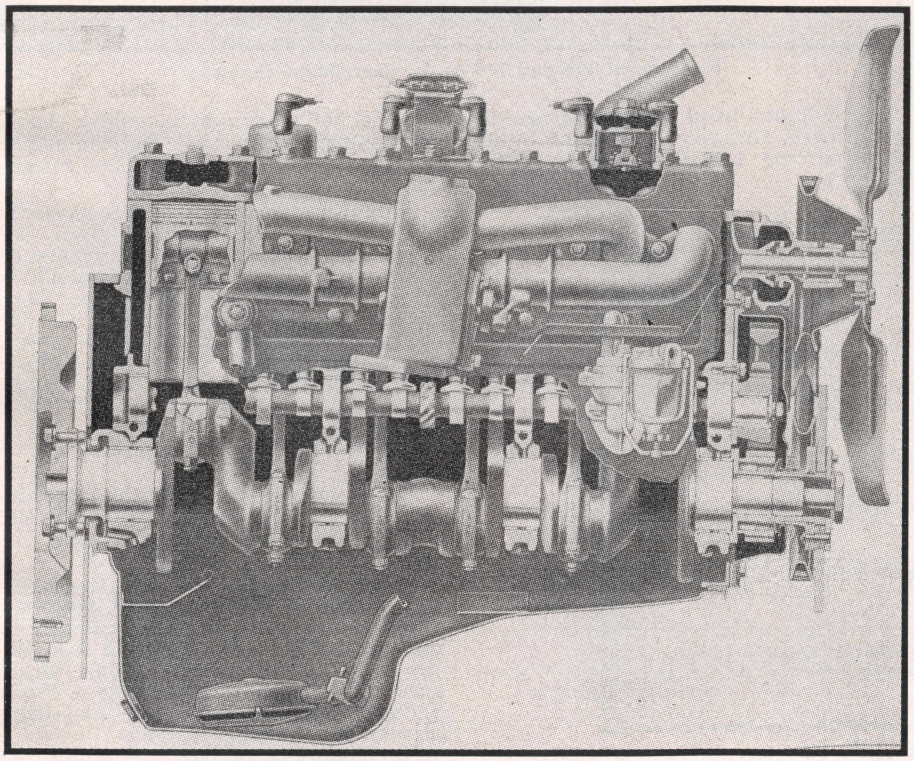

center brackets. *To insure correct installation and oil distribution, a flat is located on the front end of the rocker arm shaft.* Make certain that the oil holes and grooves in the shaft and oil holes in rocker arms and adjusting screws are clean. Clearance between rocker arms and shaft should be .0005″ to .0025″. If clearance is excessive, install new parts. Lubricate all parts with engine oil during reassembly.

V8 Engines

To remove the rocker arm assembly, proceed as follows:

1. Remove carburetor air cleaner.
2. Disconnect wires from spark plugs.
3. Drain cooling system.
4. Remove crown nuts from rocker arm cover and swing spark plug wires back out of the way.
5. Lift off rocker arm cover.
6. Remove four rocker arm bracket screws.
7. Unscrew four cylinder head capscrews that hold rocker arm assembly to head.
8. Lift off rocker arm assembly with cylinder head capscrews remaining in rocker arm shaft brackets.

Disassembly, Fig. 5

Before disassembly, mark rocker arms, brackets and shaft so that they can be reassembled in their original positions.

1. Push outer flat washer at one end of assembly so that the spring washer is compressed and remove cotter pin from shaft.
2. Remove washers and slip the end rocker arm off the shaft.
3. Holding the next rocker arm so that the spacer spring is compressed, remove cylinder head capscrew from end rocker arm shaft bracket. Still holding the spacer spring compressed, slide the bracket off the shaft.
4. Gradually release compression off the spring and remove the next rocker arm and spacer spring.
5. Proceed in the same manner to remove the remaining rocker arms, capscrews, brackets and springs.
6. Take the cotter pin out of the other end of the rocker arm shaft and remove the remaining washers.

Reassembly

Reverse the order of the above procedure to reassemble but before doing so check the following:

Under test the rocker arm spacer springs should require from 9½ to 10½ lbs. to compress each spring $2\frac{1}{32}$ in. A spring that does not test within these limits should be replaced.

Make certain that the oil holes and grooves in the rocker arm shaft are clean.

Clearance between shaft and rocker

Side view of 170 and 186 cu. in. six-cylinder engines

arms should be .0005 to .0025 in. Lubricate all parts with engine oil during assembly.

It is essential that the bottom of the rocker arm be on the oil groove side of the shaft and that the adjusting screw end of the rocker arm be on the same side as the cylinder head capscrew groove in the shaft, otherwise proper lubrication will not be achieved.

If correctly assembled, when installed on the engine, the flat on the end of the rocker arm shaft will be at the rear on the right bank and at the front on the left bank.

Installation

Place the rocker arm assembly on the head with the four cylinder head capscrews inserted through the head. Screw the capscrews down finger tight. Install the four rocker arm bracket screws and lockwashers. Tighten these screws alternately to avoid distortion of the assembly.

Make sure the push rods remain seated in the heads of the rocker arm adjusting screws and in the lifters.

Tighten the two inner cylinder head capscrews to 46-50 lbs. ft. torque and then the two outer capscrews to the same torque.

Before installing the rocker arm cover check the valve clearance and, if necessary, adjust as outlined further on.

Apply gasket seal to the flange of the rocker arm cover and place a new gasket on the flange. Install the rocker arm cover and complete the installation.

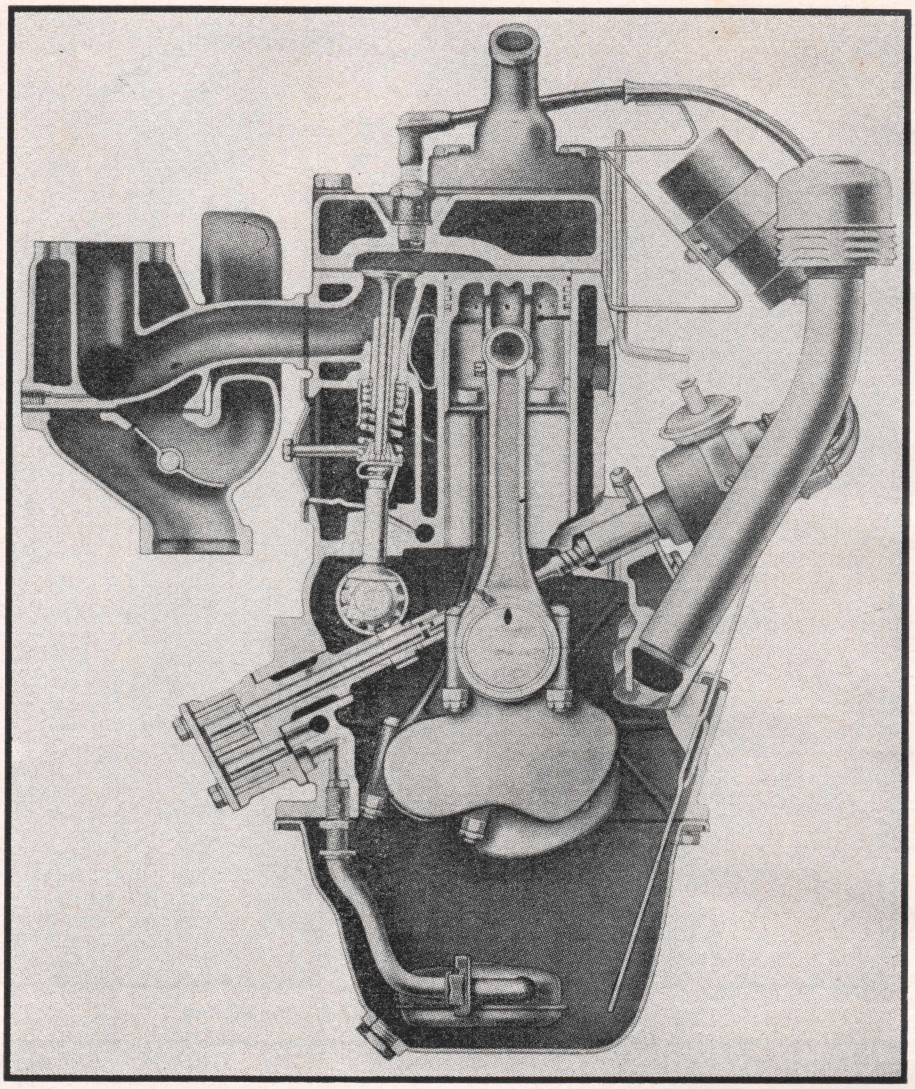

End view of 226 and 246 cu. in. six-cylinder engines

VALVES, ADJUST

1961-63 Six and All V8's

The drilled and grooved adjusting screw is self-locking. A torque of at least 30 lbs. in. should be required to turn the screw when the threads are engaged on both sides of the groove. If the torque is below the limit, valve clearance will not be maintained and the parts should be replaced.

The clearance for both intake and exhaust valves should be set to .014-.016 in. If the cylinder head capscrews are to be tightened, always complete the tightening process before adjusting valve clearances.

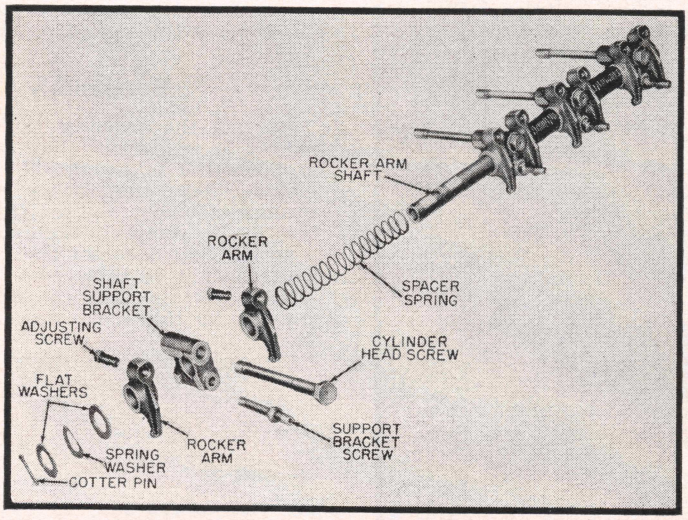

Fig. 5 Rocker arm assembly. V8 engines

To set the clearance the engine should be running at idle speed and the engine temperature should be stabilized at normal operating temperature.

After the choke tube and rocker arm covers have been removed, place the spark plug wire retaining brackets on the rocker arm assembly screws and secure them with the crown nuts. Then, with the engine idling, adjust the valve clearance by turning the adjusting screw as required to obtain the proper clearance as measured with a feeler gauge, Fig. 6.

L-Head Engines

Valves in these engines should be adjusted while the engine is at normal room temperature. The procedure is as follows:

Crank the engine over until the valve to be adjusted is fully closed. Hold the tappet body with a tappet wrench to prevent it from turning. Then turn the adjusting screw until the proper clearance is obtained (see *Tune Up & Valve Specifications* table). Adjust remaining tappets in the same manner.

On Champion engines the tappet ad-

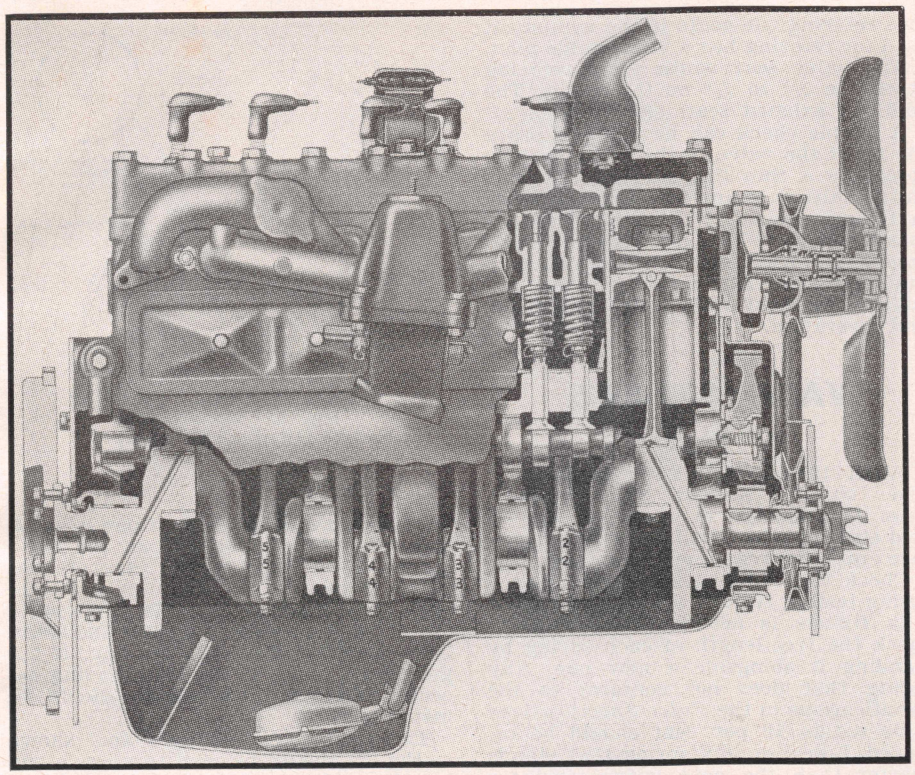

Side view of 246 cu. in. six-cylinder engines

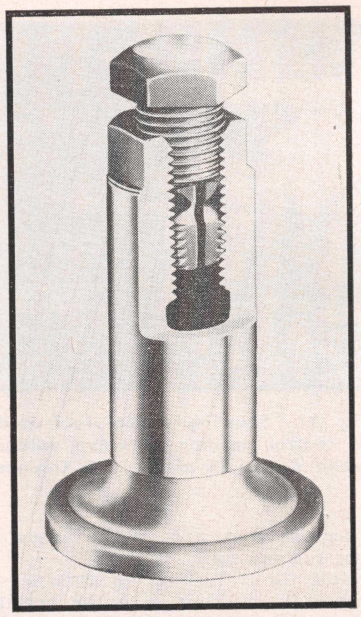

Fig. 7 Self-locking tappet adjusting screw

justing screw, Fig. 7, is self-locking. When one of these screws is replaced the torque required to turn the screw should be measured with a spring scale as shown in Fig. 8, and should register at least 25 lbs. in. If it doesn't, replace the screw.

VALVES, REMOVE

1961-63 Six and All V8's

After the cylinder head has been removed as outlined previously, remove the spark plugs to avoid damage to them. It is not necessary to remove the exhaust manifold.

Place a suitable holding strap over the valve heads to hold the valves in place while compressing the springs. Cylinder Head Holder Tool No. J-4674, Fig. 9, is available for valve work on these engines.

In using the tool as shown, do not compress the valve springs any more than is required to remove the locks and seals, Fig. 10. If they are compressed until the coils bottom, the springs will lose as much as 10 to 15 pounds tension.

After removing all locks, seals, springs and dampers, invert the head, remove the valve holding strap and lift out the valves. Place the valve in a board with numbered holes so that they can be identified as to the valve port from which they were removed.

Installation Notes

The spring dampers should be inspected to be sure that the fingers are not bent out. The fingers must contact the sides of the springs. Install the

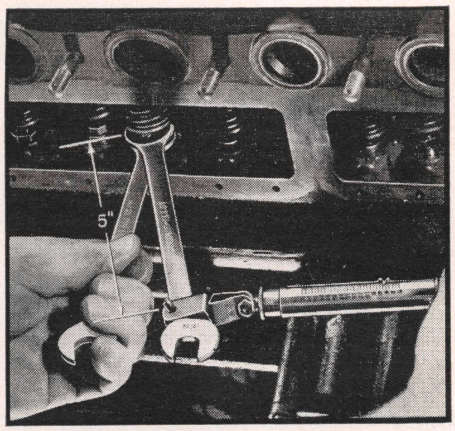

Fig. 8 Using spring scale to check tension on self-locking tappet adjusting screw

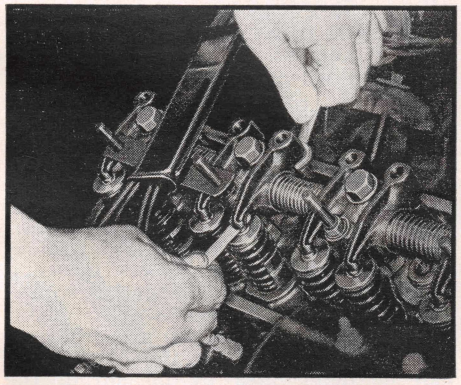

Fig. 6 Adjusting valves. V8 Engines

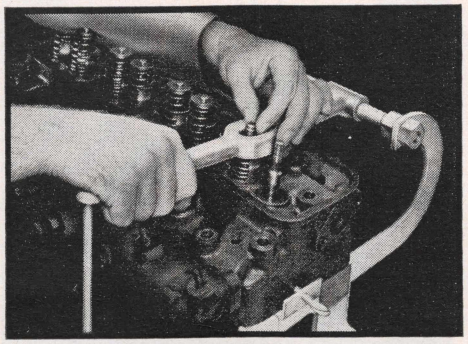

Fig. 9 Removing valve keepers with aid of special cylinder head holding fixture. V8 Engines

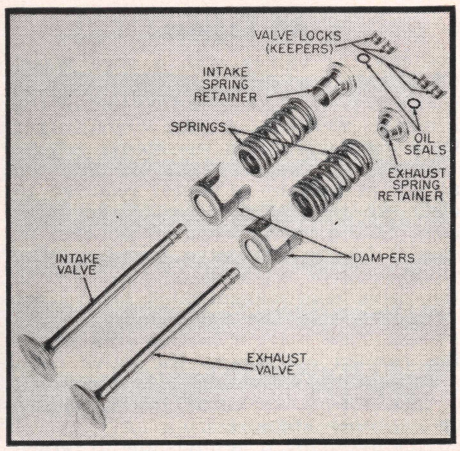

Fig. 10 Layout of valves and related parts. V8 Engines

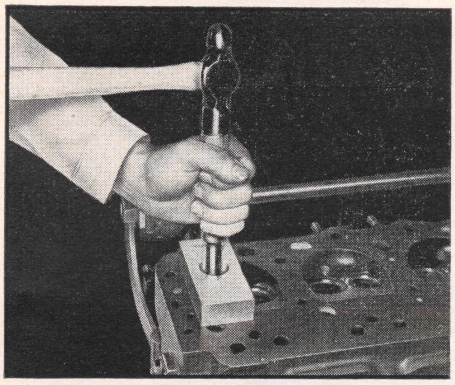

Fig. 11 Showing special tool used to control position of valve guides when driven in place. V8 Engines

dampers so they are on the closed coil end of the springs.

Install the valve spring retainers on the springs, making sure the retainers with the skirts are on the intake valves, Fig. 10. Compress the spring until the retainer is past the inner groove of the valve stem far enough to permit installing the rubber seal.

The seal must not be installed before the retainer is installed because pressing the retainer over the seal would damage the seal. Always install new rubber seals.

L-Head Engines

To remove valves from these engines, take off the cylinder head and valve covers and use cloth to block off the holes in the valve chamber to prevent the valve locks from falling into the crankcase.

With a suitable valve spring compressor, raise the springs on those valves which are closed and remove the locks. Then turn the crankshaft until those valves which are open are closed and remove the remaining valve locks.

Remove all valves and place them in a board with numbered holes so they can be identified as to the valve port from which they were removed.

VALVES, GRIND

All Engines

Clean the valves with a wire wheel brush, making sure that all carbon is removed from the top and bottom of the heads as well as the gum which might have accumulated on the stems.

In refacing valves, take off only the minimum amount of metal required to clean up the valve faces. If the outer edge of the valve becomes too thin or sharp due to excessive grinding, the valve must be replaced. In other words, the valve head margin must be at least $\frac{3}{64}$", otherwise the valve must be replaced. This margin is the area above the contact surface of the valve face.

Inspect the valve seats in the block or head for cracks, burns, pitting, ridges or improper angle. During any general engine overhaul, it is advisable to reface the valve seats regardless of their condition. If new valve guides are required, they must be installed and reamed before refacing the seats if the equipment used for refacing has a valve guide pilot.

The valve seat width after refacing should be $\frac{5}{64}$" to $\frac{7}{64}$" on the intake. The width of exhaust seats should be $\frac{7}{64}$".

A simple check can be made to prove the fit of the valve in the valve seat by spreading a thin film of Prussian Blue on the valve face and inserting the valve in the valve seat. With hand pressure, rotate the valve ¼ turn, remove it and observe the transfer of Prussian Blue to the valve seat. An uneven transfer will indicate an inaccurate valve and valve seat operation.

VALVE SPRINGS

All Engines

Wash the springs with gasoline or other suitable solvent. Then examine them for damage or corrosion due to acid etching, which will develop into surface cracks and cause spring failure.

Check the valve spring pressure on a spring testing fixture, if one is available. If a fixture is not available, at least check the free length of each spring by standing it alongside a new one. Any spring that does not conform to the specifications in the *Valve Specifications* table within 10 per cent should be replaced. Likewise, any spring that stands shorter than the new spring used for comparison should be discarded.

VALVE GUIDES, REPLACE

1961-63 Six and All V8's

Clean the valve guides with a wire guide brush, and clean the valves with a wire wheel brush, making sure that all carbon is removed from the top and bottom of the heads, as well as the gum which might have accumulated on the stems.

Check the valve stem-to-guide clearance with a dial indicator if one is available. Mount the indicator on the valve guide so that the button contacts the valve stem squarely and as near the end of the guide as possible. Then move the valve stem away from the indicator. Note the total clearance reading. If the guides are worn so that the reading exceeds .0035 in., new guides should be installed.

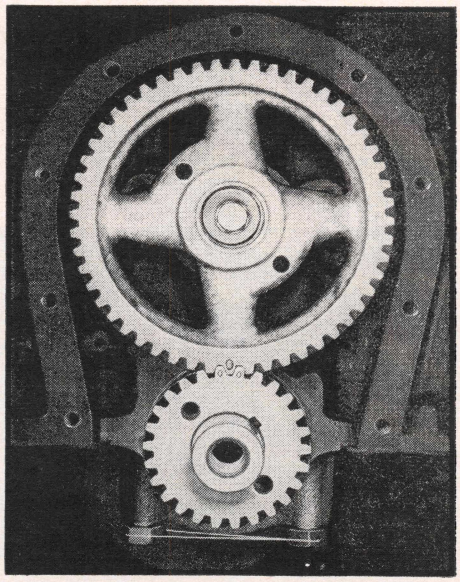

Fig. 12 For correct valve timing, gears must be installed so the timing marks mesh as shown. V8 Engines

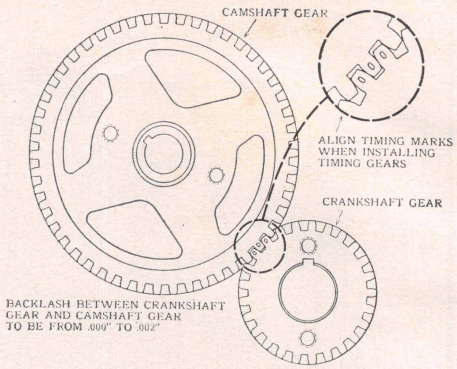

Fig. 13 Timing gear installation. All Sixes

The special Valve Guide Tool shown in Fig. 11 should be used to remove and install guides in these engines. When removing a valve guide, use the driver to drive the guide out of the cylinder head from the combustion chamber side.

When installing a guide, first coat the outside of the guide lightly with white lead. Then start the chamfered end of the guide into the head from the combustion chamber side. Place the installing plate on the face of the head as shown in Fig. 11 and drive in the guide until the shoulder of the driver contacts the bottom of the counterbore in the plate. The plate is marked "Intake" on one side and "Exhaust" on the other. Be sure the exposed mark of the plate corresponds to the valve guide being installed.

If the special tool is not available, carefully measure the position of the guides before removing them and drive the new ones in accordingly.

L-Head Engines

To check valve stem-to-guide clearance, take a new valve and place it in each valve guide and feel the clearance by moving the valve stem back and forth. If this check shows excessive clearance (over .0035 in.) it will be necessary to replace the guide. If the clearance is not excessive when checking with a new valve but is excessive when checked with the old valve, the old valve stem is worn and a new valve must be installed.

If it is necessary to replace valve guides, the old guides can be driven down and out of the valve chamber. A special driver is available for this work. However, in lieu of the driver, the guides can be pulled out of the block by using a suitable piece of pipe together with a long bolt and suitable washer.

Be sure the new guides are driven to the correct position in the block. This can be determined by measuring the position of the old guides before they are removed.

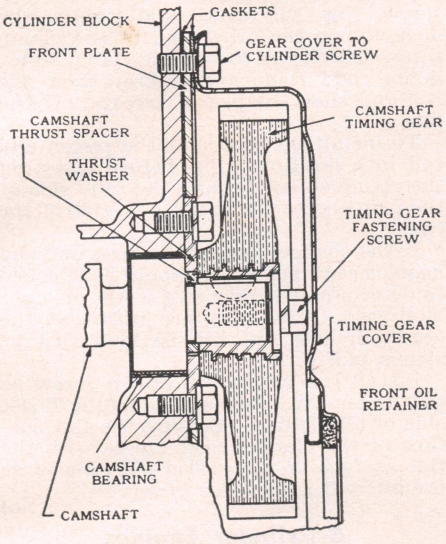

Fig. 14 Camshaft end thrust control on all engines

VALVE LIFTERS

1961-63 Six and All V8's

A straight barrel type lifter is used. To remove the lifters, take off the cylinder heads and push rods as outlined previously. Then remove the three capscrews that retain the valve lifter chamber cover and breather pipe and lift off the cover and pipe.

Take out the valve lifters, keeping them in order so they can be replaced in the same bore from which they were removed.

Wash the lifters with clean gasoline or other solvent. Remove the carbon and sludge deposits from the oil holes. Inspect all lifters for excessive wear and replace where necessary.

L-Head Engines

Mushroom type lifters are used on all six cylinder engines which means that the oil pan and camshaft must be removed and the lifters taken out from below when lifters require replacement.

TIMING GEARS

All Engines

For correct valve timing, timing gears should be assembled as shown in Figs. 12 and 13. Always use suitable puller and pusher equipment when servicing gears. This is particularly important in the case of the camshaft gear as there is danger of loosening the welch plug in back of the camshaft if the gear is driven on with hammer blows.

Camshaft gears are available in two sizes and are marked "S" for standard and "H" for high limit. The crankshaft gear is furnished in the standard size only. Whenever new gears are installed they should be selected to give .001 to .003 in. backlash.

CAMSHAFT

V8 Engines

To remove the camshaft from these engines, proceed as follows:

1. Turn the crankshaft until the timing marks show the "IGN" mark directly under the pointer on the timing gear cover and the distributor rotor is in position to fire No. 6 cylinder. In this position the timing mark on the camshaft gear is properly aligned between the marks on crankshaft gear, Fig. 12.
2. Remove rocker arm assembly, push rods and valve lifters.
3. Remove distributor drive shaft assembly.
4. If the oil pump is not to be removed, the relationship between the positions of the crankshaft and the oil pump shaft must be maintained after the removal of the distributor drive shaft. Therefore, to avoid difficulty in meshing the tongue of the distributor drive shaft with the groove of the oil pump shaft do not turn the crankshaft after it is once positioned with the timing mark under the pointer.
5. Remove water pump, vibration damper, pulley and hub, and take off the timing gear cover.
6. Remove the two screws which fasten the camshaft thrust plate to the cylinder block and withdraw the camshaft and gear as a unit, being careful not to damage the camshaft bearings.

6-Cylinder Engines

To remove the camshaft, take off the radiator and all necessary sheet metal Remove vibration damper and pulley. Remove the timing gear cover and screws which fasten the camshaft thrust plate to the cylinder block. Take off the manifolds, cylinder head, fuel pump, oil pump and valve covers.

If removal of the valves is not intended, raise the lifters and keep them up with spring-type clothespins or metal supports so they won't interfere with the camshaft as it is being withdrawn.

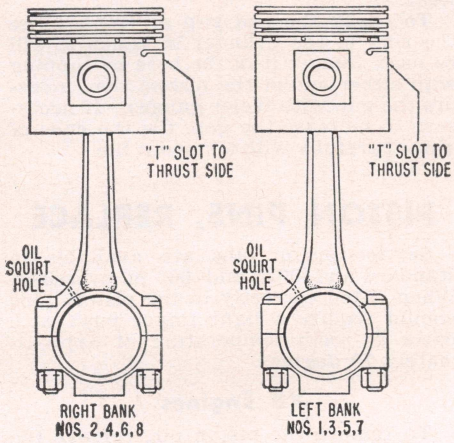

Fig. 15 Piston and rods. V8 Engines

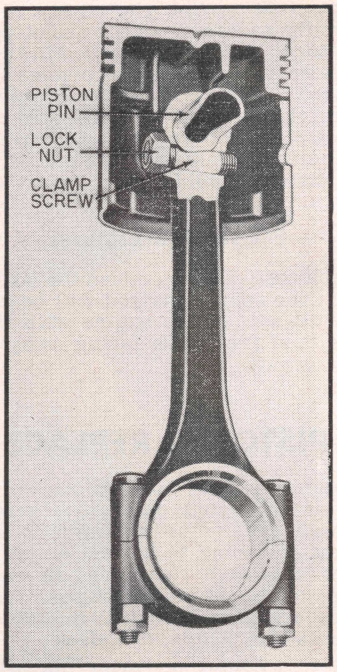

Fig. 16 Detail of piston pin lock screw. All Sixes

Camshaft End Play

Camshaft end play is controlled by a thrust plate, Fig. 14, located between the front camshaft bearing and camshaft gear.

On 6-cylinder engines, end play of .004 to .008 in. is permissible and is regulated by the amount by which the thickness of the thrust spacer exceeds that of the thrust plate. However, if a new thrust plate and spacer are installed, the end play should be held to .004 to .006 in. Use a micrometer to measure both parts.

On V8 engines, end play should be from .005 to .007 in. and is regulated in the same manner as for the L-head engines.

PISTONS & RODS, REMOVE

After removing the cylinder heads and oil pan, examine the cylinder bores above the ring travel area. If the bores are worn so that a shoulder or ridge exists at this point, remove the ridge with a ridge reamer to avoid damaging rings or cracking ring lands of pistons during removal.

Remove the connecting rod caps and push the pistons and rods out through the top of the cylinders, using care to prevent the big end of the rods from damaging the crankshaft or cylinders.

Make sure the rods and pistons are properly numbered so they can be reinstalled in the original locations. It is advisable to install caps on rods to avoid mixing parts.

PISTONS & RODS, ASSEMBLE

V8 Engines

Pistons should be assembled to the con-

necting rods so that the oil squirt holes are on the same side as the unslotted side of pistons. And when installed in the cylinders the T-slot side of all pistons should be toward the left side of the engine, Fig. 15. In other words, the T-slot side of left bank pistons should face away from the camshaft whereas the T-slot side of right bank pistons should face the camshaft.

6-Cylinder Engines

When correctly assembled the oil squirt hole in the connecting rod will be on the camshaft side of the engine with the T-slot side of the piston facing away from the camshaft.

PISTONS, REPLACE

Standard size service pistons are high limit or maximum diameter; therefore, they can usually be used with a slight amount of honing to correct slight scoring or excessive clearances in engines having relatively low mileages. Service pistons are also furnished in .005, .010, .015, .020 and .030 in. oversizes.

Before a honing or boring operation is started, measure all new pistons with a micrometer at points exactly 90 degrees away from the piston pin. Then select the smallest piston for the first fitting. The slight variation usually found between pistons in a set may provide for correction in case the first piston is fitted too free.

It is very important that refinished cylinder bores are trued up to have not more than .0005 in. out-of-round or taper. Each bore must be final honed to remove all stone or cutter marks and provide a smooth surface. During final honing, each piston must be fitted individually to the bore in which it will be installed and should be marked to insure correct installation.

After final honing and before the piston is checked for fit, each bore must be thoroughly washed to remove all traces of abrasive and then dried thoroughly. The dry bore should then be brushed clean with a power-driven fibre brush.

Both the piston and cylinder block must be at the same temperature (room temperature of 70 degrees) when the piston is checked for fit in the cylinder bore. Therefore, the cylinder should be allowed to cool after boring or honing and before the piston fit is checked. This is important because a difference of 10 degrees between the temperature of parts is sufficient to produce a variation of .0005 in.

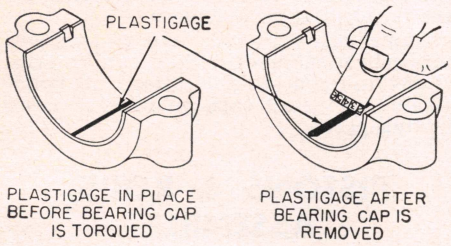

Fig. 17 Checking bearing clearance with Plastigage. All engines

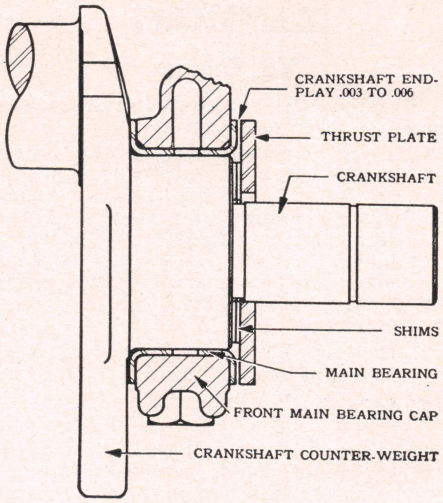

Fig. 18 Crankshaft end play control on all engines

PISTON RINGS, REPLACE

When new piston rings are to be installed without reboring cylinders, the glazed cylinder walls should be slightly dulled but without increasing the bore's diameter. This is done with a "Glaze-buster" or with a hone equipped with the finest grade of stones.

New rings must be checked for clearance in piston grooves and for gap in cylinder bores. Cylinder bores and piston grooves must be clean, dry and free of carbon and burrs.

Check the clearance of each ring in its piston groove by installing the ring and then inserting feeler gauges *under* the ring. Any wear that occurs in the piston groove forms a step or ridge at the inner portion of the lower land. If gauges are inserted above the ring, the ring may rest on the step instead of on the worn portion of the lower land, and a false measurement of clearance will result.

If the piston grooves have worn to the extent that relatively high steps or ridges exist on the lower lands, the piston should be replaced because the steps will interfere with the operation of the new rings and the ring clearances will be excessive. Piston rings are not furnished in oversize widths to compensate for ring groove wear.

To check the end gap or rings, place the ring in the cylinder in which it will be used. Square it in the bore by tapping with either end of the piston, then measure the gap with feeler gauges. If necessary to increase the gap, file the ends of rings carefully with a smooth file.

PISTON PINS, REPLACE

Service piston pins are available in standard and .0025 and .005 in. oversizes. When fitted correctly in the piston, pins should require a light finger push with parts at room temperature of approximately 70 degrees.

V8 Engines

To remove the piston pin, remove the lock nut and star washer from the clamp screw, Fig. 16. Install and tighten the lock nut on the other end of the clamp screw, which will loosen the clamp screw in the rod. Remove the screw from the rod and slide the piston and rod off the pin.

To install the pin, slide the piston and rod into position. But before inserting the clamp screw, be sure the solid side of the piston is to the squirt hole side of the rod.

If the connecting rod is a new one and hasn't been marked, it should be checked to determine whether it is a left or right bank rod. The rods are offset at the crankpin end and can be identified as shown in Fig. 15.

Install the piston pin clamp screw so that the nut will be installed on the T-slot side of all pistons. Be sure the flat surface of the clamp screw mates with the flat surface of the piston pin, otherwise the pin will work loose in service.

6-Cylinder Engines

On these engines the piston pin is locked in the rod in the same manner as for V8 engines, Fig. 16. However, on connecting rods 1, 3 and 5, the clamp screw nut is installed on the T-slot side of the piston. On Nos. 2, 4 and 6, the nut is installed on the solid side of the piston.

When installing the clamp screw regardless of the rod number, hold the rod with its offset to the left and insert the screw from the front. This will locate the lock nut on the correct side with relation to the piston.

ROD BEARINGS, REPLACE

Connecting rod bearings in these models consist of two half shells, the upper shell having an oil hole which communicates with an oil hole in the rod.

When the shells are placed in the rod and cap the ends extend slightly beyond the parting faces so that when the rod bolts are tightened the shells will be clamped tightly in place to insure positive seating and to prevent turning. *The ends of the shells must never be filed flush with the parting surface of the rod and cap.*

If this type bearing becomes noisy or is worn so that the clearance on the crankpin is excessive, a new bearing of proper size must be selected and installed since no provision is made for adjust-

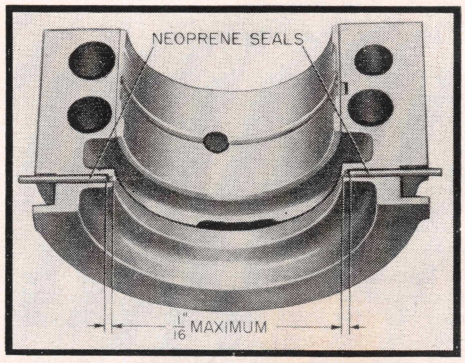

Fig. 19 Installing neoprene seals in bearing cap grooves. All engines

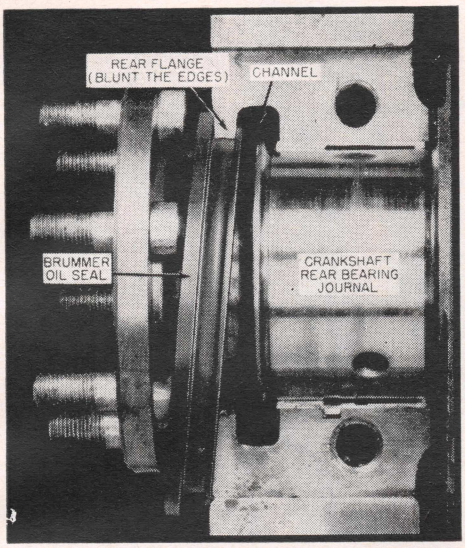

Fig. 20 Installing Brummer oil seal

ment. Under no circumstances should the rod or cap be filed to adjust bearing clearance.

Service bearings are furnished in standard size and several undersizes, including undersizes for reground crankshafts.

The clearance for connecting rod (and main) bearings may be checked with Plastigage which is available at any auto parts jobber and full instructions for its use are furnished with the envelope in which it is contained, Fig. 17.

Lacking Plastigage, however, clearance may be checked with a .002 in. test shim, ¾ in. square. Place the shim between the bearing and shaft journal. Install the bearing cap and tighten the nuts to the recommended torque of 28-32 lbs. ft. on Champion engines and 50-55 lbs. ft. on Commander engines. A locked bearing or drag when the rod is moved endwise on the crankshaft indicates the clearance is correct providing the rod moves endwise freely without the test shim installed. Do not overlook removing the test shim.

Connecting rod nuts are locked with stamped nuts which should not be reused when once removed. Install these nuts with the flat face toward the connecting rod nut. Turn the locking nut finger tight and then tighten it an additional one-third turn with a wrench.

MAIN BEARINGS, REPLACE

Main bearings are the shell type and can be removed and replaced without removing the crankshaft. The bearings are made to size and do not require line reaming or adjustment.

When it is necessary to install new bearing shells, it is advisable to measure the shaft journals with a micrometer for being out-of-round. If an out-of-round condition exists in excess of the standard running clearance of the bearings (either main or connecting rod) a satisfactory bearing replacement cannot be made and it will be necessary to replace or regrind the crankshaft.

Use a rifle brush to clean the oil passages in both the shaft and crankcase. If possible, blow out the oil holes with compressed air. Be sure the journals are not nicked or scored and that all parts are thoroughly clean.

After installing the bearings, check the running clearance to be sure it is standard (see *Engine Bearing Data* chart). Use Plastigage or a .002 in. test shim about one inch square. Place the shim between the shaft and bearing and tighten the bearing cap nuts to the recommended torque of 88-93 lbs. ft. The shaft should be locked if the clearance is at the low limit or show a drag if at the high limit when turned, proving that the clearance is correct. Do not overlook removing the test shim.

CRANKSHAFT END PLAY, ADJUST

Crankshaft end play is controlled by shims located between the vertical surface of the front main bearing journal and the crankshaft thrust washer, Fig. 18.

Whenever new bearings are fitted the clearance should be carefully checked and shims should be added or removed as required to bring the end play within the limits given in the *Engine Bearing Data* chart.

End play can be measured by forcing the crankshaft forward and inserting feeler gauges between the crankshaft gear and thrust washer.

CRANKSHAFT OIL SEAL, REPLACE

Oil sealing at the rear main bearing is controlled by a Brummer oil seal installed around the crankshaft journal, wood filler blocks between the sides of the main bearing cap and block, and Neoprene seals between the bearing cap face and block.

1. Remove crankshaft rear bearing cap and all the old oil seals.
2. Wash bearing, blow dry and wipe clean.
3. Loosen the intermediate bearing caps approximately two turns to give additional clearance between the rear journal and block.
4. Insert the Neoprene seals in the cross grooves of the rear bearing cap so that the inner end of each seal is inset $\frac{11}{64}$ in., Fig. 19.
5. Press the seals uniformly and firmly into the grooves.
6. Place the cap with the seals downward on a flat surface and, while pressing on the cap, use a sharp knife or razor blade to cut the protruding ends of the seals flush with the side of the cap.
7. If the engine was not originally equipped with this type seal, use the flat side of a screwdriver to blunt the sharp edge of the flange, Fig. 20, on which the seal is to be mounted. It is not necessary to remove any material from this edge but only to blunt it so that it does not scuff the soft center sealing cushion at the bottom of the groove since this cushion is as important a part of the seal as the compression flange which wipes the crankshaft.
8. Before installing the Brummer oil seal, clean the channel just forward of the crankcase rear flange by pulling a swab saturated with alcohol or a similar solvent through the channel several times. Then dry the channel thoroughly.
9. Dip the ends of the seal in liquid soap and spread the soap throughout the inside of the outer groove.
10. Spread the seal just enough to permit aligning one end of it with the crankcase rear flange and insert the seal as shown in Fig. 20.
11. Carefully work the seal around the crankshaft until the end emerges on the opposite side, Fig. 21.
12. Now align the seal, reverse the direction of rotation and insert the other end of the seal.
13. Continue to turn the seal until the joint is approximately 45 degrees from the lower surface of the block.
14. Apply oil between the compression

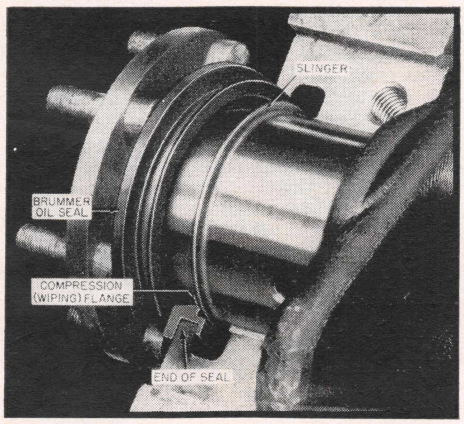

Fig. 21 Installing Brummer oil seal

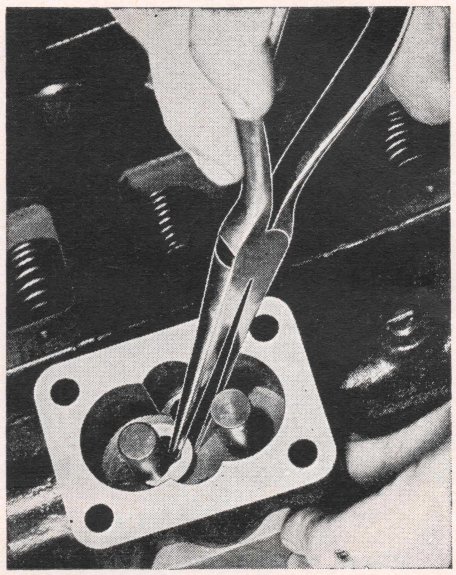

Fig. 22 Removing "C" washer to disassemble oil pump. 170 and 186 cu. in. engines

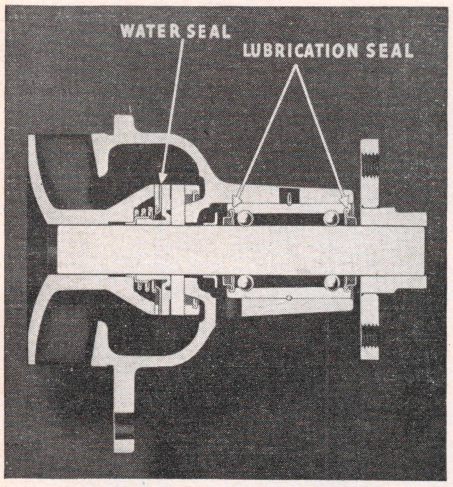

Fig. 23 Typical sealed ball bearing type water pump used on all L-head engines

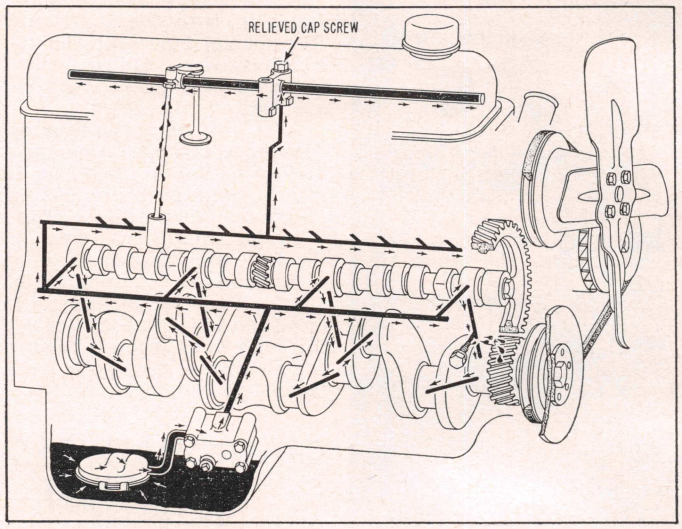

Engine lubrication diagram. Overhead valve 6-cylinder

flange of the seal and the crankshaft journal.

15. Install the bearing cap and the two Neoprene seals.
16. Install bearing cap screws and tighten to specified torque. Tighten intermediate bearings caps.
17. Install the two wood filler blocks, being sure the blocks are not damaged or split during the installation.
18. Complete the job and run the engine for 45 minutes and check for oil leaks.

OIL PUMP REPAIRS

6-Cylinder Engines

Before removing the oil pump, crank the engine to bring No. 1 piston to its firing position, which is when the ignition mark on the vibration damper or flywheel is in line with the pointer. If possible, leave the engine in this position while the pump is off in order to obtain correct ignition timing. However, if the engine is disturbed while the pump is off, return it to the No. 1 firing position before attempting to install the pump.

On 170 and 186 cu. in. engines, removal of the oil pump is a piece-by-piece operation. Take off the bottom cover and pick out the "C" washer, Fig. 22, from the pump shaft. Remove the body and pull out the shaft and gears.

Reverse the operations to assemble, being sure the engine is in the position to fire No. 1 cylinder.

V8 Engines

Removing the pump from these engines does not effect the ignition timing. After removing the oil pan as previously outlined, remove the two pump retaining nuts and slip the pump from the mounting studs.

WATER PUMP REPAIRS

6-Cylinder Engines

These models use the seal type, ball bearing pump, Fig. 23.

To disassemble, remove the bearing lock ring and press the shaft and bearing out through the front of the housing. Pick out the seal parts, being careful to note their arrangement so that upon reassembly, leakage will be avoided.

Inspect the parts for damage or wear. If the thrust seal surface is rough, it should be refaced with a suitable facing tool. Always use a new impeller and seal assembly. And to insure a tight fit, use a new fan hub.

When assembling, press the fan hub on the shaft so that it is flush with the end of the shaft. Install the shaft and bearing and insert the bearing lock ring. Slip the seal parts into the impeller and press the impeller on the shaft, allowing 1/32 inch clearance between the impeller and housing.

V8 Engines

To remove the water pump, drain the cooling system and remove the fan belt, fan and pulley. Disconnect all water hose. Remove the generator adjusting arm from the top stud. Then remove the seven capscrews holding the pump housing to the engine. Lift off the water pump and four gaskets.

To disassemble the pump, remove the cover and impeller from the pump housing. Pull out the bearing lock ring. Place the assembly in an arbor press and press the hub, shaft and bearing assembly out of the impeller and cover. Then press the shaft and bearing out of the hub.

Inspect the parts for wear or damage. If the thrust seal surface in the housing has become rough, it should be refaced with a suitable facing cutter.

In assembling the pump, a new fan hub should be used to insure a tight fit on the shaft. Press the fan hub on the shaft so it is flush with the end of the shaft. The impeller should be pressed on the shaft so it too is flush with the end of the shaft.

IGNITION TIMING

If a timing light is to be used to set ignition timing, disconnect the vacuum advance pipe to the carburetor and place a piece of tape over open end of pipe. *This is important as carburetor trouble can affect timing adjustments.*

Lacking a power timing light, an accurate method of setting ignition timing with the engine stopped is with the aid of a jumper light. Be sure to use a light bulb that corresponds with the system voltage of the vehicle.

1. Remove distributor cap and rotor and see that the breaker gap is set according to specifications.
2. Rotate engine until No. 1 cylinder is at the ignition timing point as indicated by the timing pointer and timing mark being lined up with each other.
3. Connect the jumper light between distributor ignition terminal and ground.
4. Turn on ignition switch.
5. Loosen distributor and turn it in the direction of normal rotation until the points just close (light out). Then slowly turn distributor in the opposite direction just to the exact point that the light goes on. Tighten distributor in this position.

Carburetor Section

Performance Complaints

Flooding, stumble on acceleration or other performance complaints are in many instances caused by the presence of dirt, water or other foreign matter in the carburetor. To aid in diagnosing the cause of the complaint, the carburetor should be carefully removed from the engine without draining the fuel from the bowl. The contents of the fuel bowl may then be examined for contamination as the carburetor is disassembled.

Check the fuel in the bowl for contamination by dirt, water, gum or other foreign matter. A magnet moved through the fuel in the bowl will pick up and identify any iron oxide dust that may have caused intake needle and seat leakage.

Inspect gasketed surfaces between body and air horn. Small nicks or burrs should be smoothed down to eliminate air or fuel leakage. On carburetors having a vacuum piston, be especially particular when inspecting the top surface of the inner wall of the bowl around the vacuum piston passage. A poor seal at this location may contribute to "cutting-out on turns" complaint.

Fill the carburetor bowl with clean fuel before installing on manifold. This will help prevent dirt trapped in the fuel system from being dislodged by the free flow of fuel as the carburetor is primed. The operation of the floats and intake needle and seats may be checked under pressure if the fuel pump is used at the bench to fill the carburetor bowl. Operate the throttle several times and visually check the discharge of the pump jets.

Poor Mileage and Engine Loading Complaints

Cases of poor mileage and engine loading on carburetors with automatic choke may be due in many instances to sluggish choke valve opening during cold driveaway, caused by insufficient vacuum in choke housing, a plugged or restricted heat pipe or inlet in choke cover. To check for this condition, have engine warm and running at slow idle. Remove choke heat pipe and hold a foreign matter. A magnet moved through choke housing on some carburetors). If there is little or no vacuum pull on the finger, check the choke housing for gasket leaks or plugged vacuum passages If these are OK, check choke vacuum passages in carburetor between choke housing and manifold.

Dirty or Rusty Automatic Choke Housing

In cases where it is found that the interior of the choke housing is dirty, gummed or rusty while the carburetor itself is comparatively clean, look for a punctured or eroded manifold heat tube (if one is used).

Positive Crankcase Ventilation

When there is a complaint of carburetor troubles and the car is equipped with a Positive Crankcase Ventilator Unit, it is advisable first to check the operation of this unit before servicing the carburetor. For data on this unit, see the *Tune Up Chapter*.

CARTER CARBURETOR ADJUSTMENTS

Truck Series	Carburetor Model	Float Level	Float Drop	Idle Screw Turns Open	Pump Travel Setting	Fast Idle Setting	Choke Unloader Setting	Choke Setting
2E, 3E	BBRI-2125S	5/64 (1)	None	1/2–1 1/2	1/2	None	None	None
2E, 3E	BBRI-777SA	7/64 (1)	None	3/4–1 1/4	35/64	None	None	None
2E, 3E	WCFB-2224S	3/16 (2)	11/16 (3)	1/2–1 1/2	(4)	.024 (5)	1/8 (6)	1 Rich
3E, 4E	WCFB-2831S	3/16 (2)	11/16 (3)	1/4–1 1/2	(4)	.020 (5)	9/16 (6)	1 Rich
4E	AS-2876S	1/4 (7)	None	1/4–1 3/4	(8)	.045 (9)	3/16 (10)	Index
5E	AS-2934S	1/4 (7)	None	1/4–1 3/4	(8)	.065 (9)	3/16 (10)	Index
5E	AS-3046S	1/4 (7)	None	1/4–1 3/4	(8)	.065 (9)	3/16 (10)	Index
5E	AS-3062S	1/4 (7)	None	1/8–1 1/2	(8)	.065 (9)	3/16 (10)	Index
5E	AS-3079S	1/4 (7)	None	1/8–1 1/2	(8)	.065 (9)	3/16 (10)	Index
5E	WCFB-2829S	3/16 (2)	11/16 (3)	1/4–1 1/2	(4)	.023 (5)	9/64 (6)	1 Rich
6E, 7E	AS-3159S	1/4 (7)	None	1/8–1 1/2	(8)	.065 (9)	3/16 (10)	Index
6E, 7E	AS-3046S	1/4 (7)	None	1/8–1 1/2	(8)	.065 (9)	3/16 (10)	Index
6E, 7E	WCFB-2829S	3/16 (2)	11/16 (3)	1/4–1 1/2	(4)	.023 (5)	9/64 (6)	1 Rich
6E, 7E	WCFB-2831S	3/16 (2)	11/16 (3)	1/4–1 1/2	(4)	.020 (5)	9/16 (6)	1 Rich
8E5, 10	RBS-3538S	1/2 (11)	. . .	. . .	1/16 (13)	.052 (15)	5/32 (16)	Index
8E5, 10	RBS-352S	1/2 (11)	. . .	. . .	1/16 (13)	.052 (15)	5/32 (16)	Index
8E40	AFB-3540S	5/16 (12)	. . .	. . .	27/64 (14)	. . .	5/32 (17)	Index

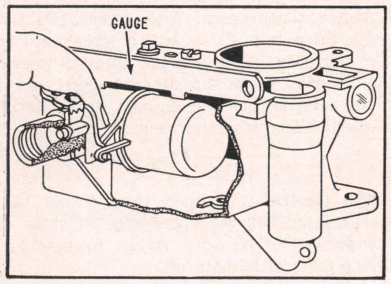

Fig. ①—BBRI float level

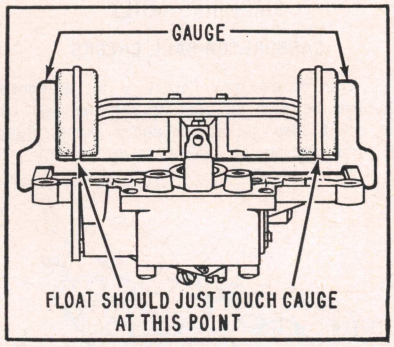

Fig. ②—WCFB float level.

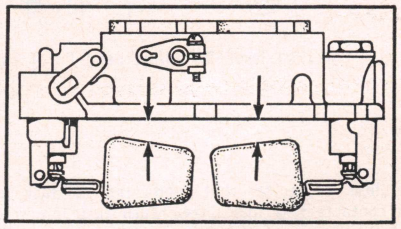

Fig. ③—WCFB float drop.

CARTER NOTES

METERING ROD

WCFB—Metering rod adjustment must be made after completing pump adjustment. No gauges are necessary. Back out throttle lever set screw so throttle valves are fully seated and loosen metering rod arm clamp screw. With metering rods in place, press down on vacumeter link unt'l metering rods bottom on casting. Holding rods down and throttle valves seated, revolve metering rod arm until finger on arm contacts lip of vacumeter link. Hold in place and tighten clamp screw.

AS—Metering rod should just bottom at wide open throttle. Adjust by bending metering rod arm.

CARTER NOTES Continued

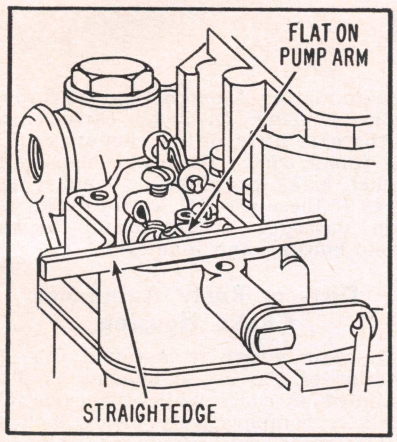

Fig. ④—With pump connector link in outer hole of pump arm (long stroke) and with throttle valves seated, hold straight edge across top of dust cover boss at pump arm. Flat on pump arm should be parallel to straight edge. Adjust by bending throttle connector rod at lower angle.

⑤—Loosen choke lever clamp screw on choke shaft. Insert .020" feeler gauge between lip of fast idle cam and boss of flange casting. Hold choke valve closed and take slack out of linkage by pressing choke lever towards closed position; hold in place and tighten clamp screw. With choke valve tightly closed, tighten fast idle adjusting screw until there is the clearance listed between throttle valve and carburetor bore (side opposite idle port). Be sure fast idle adjusting screw is on high step of fast idle cam when making this adjustment.

⑥—With throttle wide open there should be the clearance listed between upper edge of choke valve and inner wall of air horn. Adjust by bending unloader lip on throttle shaft lever.

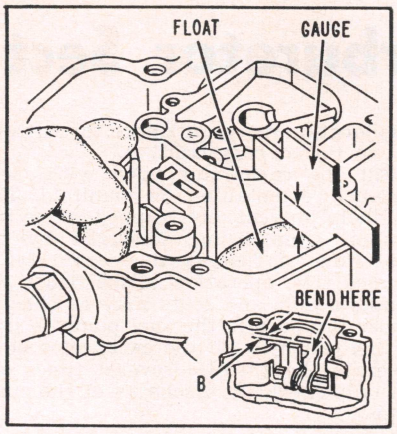

Fig. ⑦—AS float level. Adjust by bending float lip. After adjusting, there should be .010" to .015" clearance between overlapping tangs of float levers. Bend long tang on left hand float to adjust.

⑧—Pump arm on lifter link should parallel top of casting. Bend pump arm to adjust.

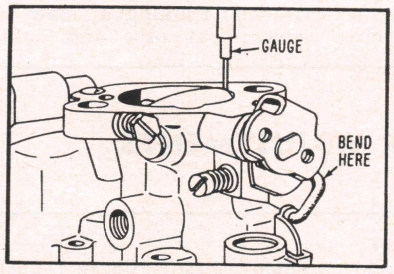

Fig. ⑨—There should be the clearance listed between lower edge of choke valve and carburetor bore with fast idle link on high step of cam. Adjust by bending choke connector rod.

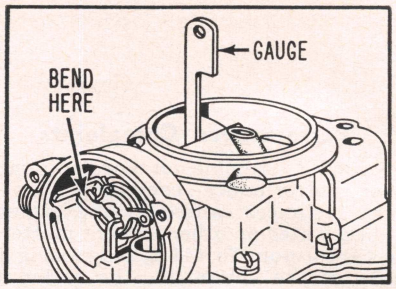

Fig. ⑩—There should be the clearance listed between top edge of choke valve and inner wall of air horn. Adjust by bending arm on choke trip lever.

⑪—Measured at outer ends of float from casting with carburetor inverted with weight of float on needle.

⑫—Measured from air horn to top of float with air horn inverted.

⑬—Measured from pump plunger washer to boss on bowl with throttle valve fully closed and choke open.

⑭—Measured from bowl cover to top of pump plunger with throttle valve fully closed.

⑮—Measured between throttle valve and idle port side of carburetor bore while on fast idle step.

⑯—Measured at air horn inner wall to edge of choke valve with wide open throttle holding choke closed.

⑰—Between upper edge of choke valve and inner wall of air horn with wide open throttle and choke held closed.

STROMBERG NOTES

CARBURETOR BALL CHECKS

Whenever it becomes necessary to dismantle a carburetor be sure to account for the ball check valves that may be found under pump plungers and compensating or power valves.

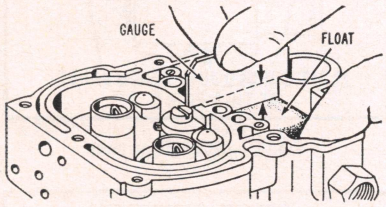

Fig. ①—WW float level. To adjust bend lip of float lever.

②—Close choke so that high step of fast idle cam contacts fast idle screw. Turn fast idle screw until the clearance specified exists between throttle valve and carburetor bore on idle port side.

STROMBERG CARBURETOR ADJUSTMENTS

Year	Carb. Model	Float Level	Idle Screw Turns Open	Pump Travel Setting	Fast Idle Setting	Unloader Setting	Choke Setting	Dashpot Setting
1955	WW6-114A	3/16①	1½	None	④	.228③	Index	None
	WW6-115A	3/16①	1½	None	④	.228③	Index	None
1956	WW6-117	3/16①	1½	None	④	.228③	1 Lean	None
	WW6-118A	3/16①	1½	None	④	.228③	1 Lean	None
1957–58	WW6-119	3/16①	1½	None	④	.228③	1 Lean	None
	WW6-120	3/16①	1½	None	④	.228③	1 Lean	None
1959–62	WW6-123A	3/16①	1½	None	.025②	.192③	Index	None
1963	WW6-130	3/16①	1½	None	.030⑤	.192③	Index	None
	WW6-131	3/16①	1½	None	.030⑤	.192③	Index	None

Continued

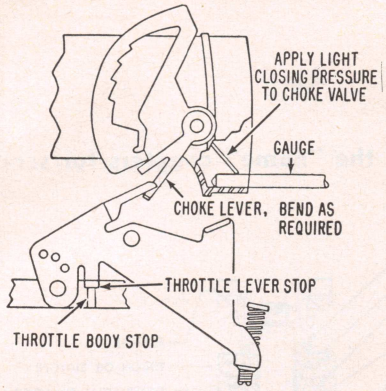

Fig. ③—Hold choke valve lightly closed. Then open throttle until throttle lever stop rests against throttle body stop. Choke should be open the dimension specified between narrow side of choke valve and inner wall of air horn. Adjust by bending throttle lever ear.

⑤—Measured between throttle valve and idle port side with cam on highest step.

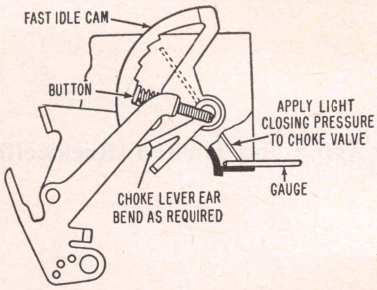

Fig. ④—With choke valve fully closed and fast idle cam in fast idle position one-half the diameter of the button at the end of the throttle stop screw should rest against the step of the fast idle cam. Adjust by bending choke lever ear.

Clutch & Transmission Section

For New Process and Warner transmissions used on Studebaker trucks, see the "name" chapters for service procedures and lubricant capacities

BORG & BECK

These clutches are single plate, dry disc types with no internal provision for adjustment for wear. However, each release lever is adjusted individually to the correct height, and no attempt should be made to adjust these levers unless the clutch is to be dismantled for overhaul. Overhauling the clutch should not be attempted unless a clutch rebuilder is available. Lacking this equipment it is recommended that the clutch cover and pressure plate assembly be exchanged for a rebuilt unit.

Clutch Pedal, Adjust

The general procedure for adjusting the clutch pedal is to shift the pedal down away from the toe board until the clearance or free movement is ¾" to 1". The pedal pad should come in contact with the toe board when the pedal is pressed down. If it does not move that far, making it necessary to spring the pedal to make the pad touch the toe board, shift the pedal down a little more.

Press the pedal down and note the distance the release bearing travels after it comes in contact with the release levers. To obtain a clean release the levers should be pushed toward the flywheel $\frac{7}{16}$". If it does not travel this distance shift the pedal up, bearing in mind that the pedal pad must touch the toe board as above.

Clutch Assembly, Replace

After removing the transmission, but before removing the clutch, mark with a punch the flywheel, clutch cover and pressure plate so that these parts may be assembled in their same relative positions and in the same position on the flywheel if the same clutch is to be reinstalled. This is important because they are balanced as an assembly.

To remove the clutch, pull out the clutch release bearing and sleeve. Unfasten the clutch cover from the flywheel, loosening each cap screw a few turns in succession until the cover is free. The clutch assembly and driven disc can then be removed from the flywheel.

When installing the clutch, coat the pilot bearing in the end of the crankshaft with wheel bearing grease. Clean the surfaces of the flywheel and pressure plate, making certain no oil or grease remains on these parts. Hold the cover plate and disc in place and insert a special clutch aligning tool or a spare clutch shaft through the hub of the disc and into the pilot bearing in the crankshaft. Bolt the clutch cover loosely to the flywheel, being sure the punch marks previously made are lined up. To avoid distortion of the clutch cover, tighten the cover bolts a few turns each in progression until all are tight. Guide the transmission into place, using care to see that the driven disc is not bent. Use a floor jack to support the transmission so that the clutch shaft may be guided through the driven disc safely. Adjust the clutch pedal free travel.

INLAND CLUTCH

This type clutch is a single dry disc type with a diaphragm spring. The driven member is the cushion type with dampener springs at the hub. The cover and pressure plate assembly is bolted to the engine flywheel and the disc is gripped between the friction surfaces of the pressure plate and flywheel. The clutch disc is splined to the main drive gear which is part of the transmission.

Disassemble

1. Remove three drive strap-to-pressure plate bolts and retracting springs and remove pressure plate from clutch cover. *When disassembling, note position of "O" marks on pressure plate and cover. These marks must be aligned when assembled to maintain balance.*
2. The clutch diaphragm spring and two pivot rings are riveted to the clutch cover. Spring, ring and cover should be inspected for excessive wear or damage and if there is a defect, it is necessary to replace the complete cover assembly.

Inspection

1. Wash all parts except throwout bearing in cleaning solvent. *The throwout bearing is permanently packed with lubricant and should not be soaked in cleaning solvent as this may dissolve the lubricant.*
2. Inspect pressure plate and flywheel for scores on the contact surfaces.
3. Check drive straps for looseness at the clutch cover rivets and for evidence of looseness at the pressure plate bolt holes.
4. Check throwout bearing for roughness and for free fit on sleeve of transmission clutch gear bearing retainer.
5. Check run-out of transmission pilot hole in clutch housing by removing a flywheel bolt and installing a dial indicator. Run-out should not be more than .008"
6. Check fit of ball in clutch fork, which should be snug without end play.
7. Inspect clutch disc for worn, loose or oil soaked facings, broken springs, loose or riding rivets.
8. Examine splines in hub and make sure they slide freely on splines of transmission clutch shaft. If splines are worn, the clutch should be replaced.

Assemble

1. Install pressure plate in cover, lining up "O" mark [on pressure plate with "O" mark] on flange of cover.
2. Install pressure plate retracting springs and drive strap-to-pressure plate bolts and lockwashers and torque to 11 lb. ft. The clutch is now ready to be installed.

Rear Axle Section

For Eaton and Timken (Rockwell) driving axles used on Studebaker trucks, see the "name" chapters for service procedures and lubricant capacities

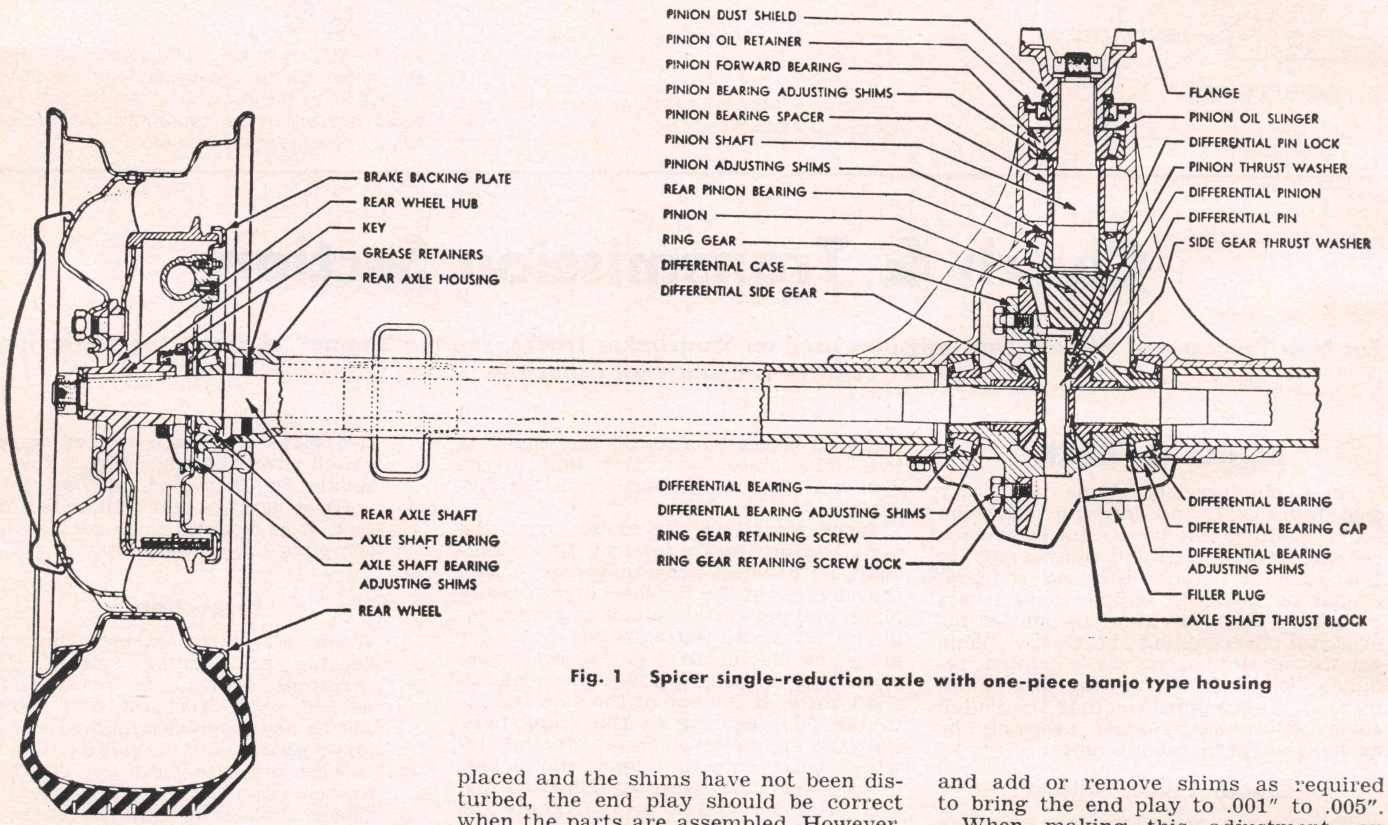

Fig. 1 Spicer single-reduction axle with one-piece banjo type housing

SPICER

One-Piece Housing Type

This rear axle, Fig. 1, is of the semi-floating, hotchkiss drive type. The drive pinion is the over-hung type, mounted on pre-loaded taper roller bearings. Sealing of the pinion shaft is accomplished at the front end by a spring-loaded leather seal bearing on the companion flange, which is splined and secured to the pinion shaft by a nut.

Axle Shaft, Remove

To remove an axle shaft, jack up the wheel and pull off the hub and brake drum. Block the brake pedal in such a manner that it cannot be depressed. Disconnect the hydraulic brake line from the wheel cylinder. Remove the mounting screws and take off the outer oil seal, shims and brake support. The shaft and bearing may then be pulled out of the housing. The inner oil seal may be removed at this time.

Axle Shaft, Install

Replace the shaft and bearings in the reverse order. If the old parts are replaced and the shims have not been disturbed, the end play should be correct when the parts are assembled. However, if a new axle shaft, bearing, differential carrier or housing has been installed, it will be necessary to check the end play.

Axle Shaft End Play, Adjust

Axle shaft end play can be checked when all parts have been replaced except the wheel and hub. To make the check, rap each axle shaft after the nuts are tight to be sure the bearing cups are seated. Then mount a dial indicator on the axle housing with its contact button touching the end of the shaft. Work the shaft in and out by hand and note the reading on the indicator. If an adjustment is necessary, remove the oil seal and brake support and add or remove shims as required to bring the end play to .001" to .005".

When making this adjustment, an equal thickness of shims should be removed or added on each side of the axle housing to maintain the central position of the axle shafts.

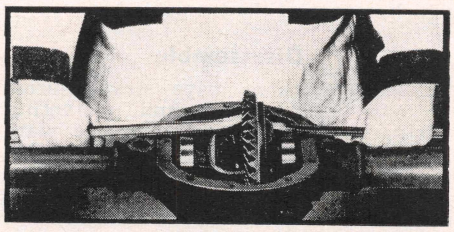

Fig. 2 Prying differential from housing. Spicer axle

Rear Axle Assembly, Replace

Inasmuch as the axle tubes are pressed into the differential carrier to form a one-piece housing, the rear axle assembly must be removed from the chassis when it becomes necessary to overhaul the unit.

1. Raise vehicle from floor and support with stand jacks under frame side rails.
2. Remove rear wheels.
3. Split rear universal joint.
4. Disconnect parking brake cable from operating lever and from brake backing plates.
5. Disconnect hydraulic brake line connection at rear axle housing.
6. Loosen and move shock absorbers out of the way.
7. While supporting axle housing with hydraulic jack, remove spring clips and lower axle assembly to the floor.
8. Reverse the foregoing procedure to install the rear axle assembly, being sure to bleed the brake system when the installation is completed.

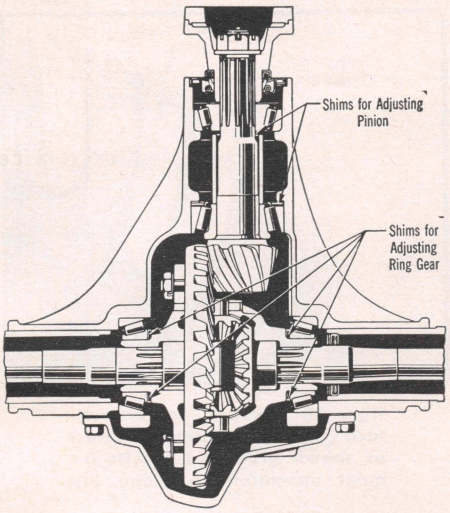

Fig. 3 Adjustments on Spicer axle

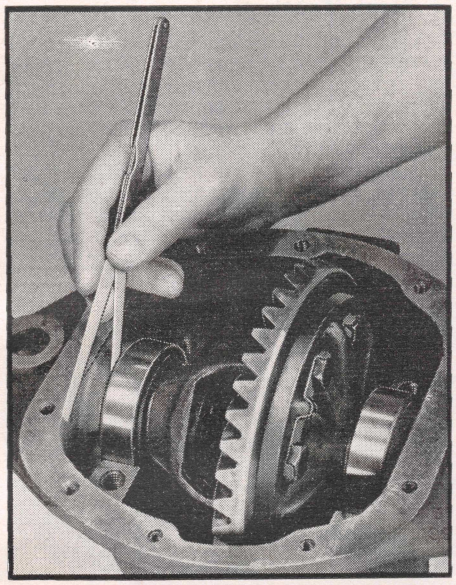

Fig. 4 Checking clearance between bearing cup and differential case. Spicer axle

Differential Carrier, Disassemble

1. Remove axle shafts as outlined previously. Axle shafts may be pulled out only far enough to clear differential side gears.
2. Drain lubricant and remove rear cover.
3. Make sure differential side bearing caps and axle housing are marked, then remove the side bearing caps.
4. Pry differential from housing, Fig. 2.
5. Remove side bearing cups.
6. Pull off side bearings and adjusting shims, tagging the shims for identification on reassembly.
7. Unfasten ring gear from case.
8. Drive out differential pinion shaft pin and pull out the shaft, pinions and side gears.
9. Hold companion flange from turning and remove flange nut.
10. Pull flange from pinion shaft.
11. Remove pinion from carrier by tapping on front end with soft hammer.
12. Remove pinion shaft bearing oil seal and bearings from carrier, keeping separate the shim pack at each bearing.

Pinion & Bearings, Replace

If the original ring gear and pinion are being used in the original carrier, use the original shim packs at each bearing, Fig. 3. If a new pinion or differential carrier is installed, note the markings on the end of the pinion gear and on the differential carrier to obtain the correct thickness of shimming to be used with these parts from your supplier. The shims behind the rear bearing establishes the correct pinion depth.

1. Press the rear pinion bearing cup in the housing with the proper thickness of shims. Press the rear pinion bearing on the shaft.
2. Install the front bearing cup and shims, and front bearing.
3. Install the companion flange and, while holding the flange from turning, tighten the nut to a torque load of 200-220 lb. ft.
4. Check the pinion bearing pre-load with a spring scale and heavy cord wrapped around the companion flange. Pull on the spring scale. The torque required to rotate the pinion is 10-30 inch lbs. If not within these limits, add or remove shims from behind the front bearing to obtain the proper pre-load.
5. Remove the companion flange and install a new oil seal (well soaked). Reinstall the companion flange and tighten the nut to a torque load of 200-220 lb. ft.

Ring Gear, Replace

1. Install guide pins in every other hole in the ring gear. These pins can be made from 1½" long capscrews with heads cut off and ends slotted.
2. Make sure back face of ring gear and face of case are free of dirt and burrs and slip gear over pilot diameter of case.
3. Install every other ring gear bolt. Draw them up evenly and snugly so ring gear face is flush with face of case.
4. Remove guide pins and install remaining bolts.

Differential Carrier, Assemble

The differential bearings are adjusted by shims, Fig. 3. These shims also establish the ring gear position with the pinion. Therefore, backlash must be checked whenever a bearing adjustment is made.

The correct bearing adjustment is one which will provide a .015-.020" pinch fit when the differential unit is assembled into the carrier. To make the adjustment, install the bearing cones without shims and place the assembly in the housing with the bearing cups. Force the unit to one side and check the clearance between the bearing cup and differential case with a feeler gauge, Fig. 4. When the clearance is determined, select shims of this amount plus .015-.020" extra to establish the proper pre-load.

Remove the differential bearings again and divide the shims into two packs of equal thickness and install on each side and replace the bearings. Reinstall the unit in the carrier. This operation is made easier by cocking the bearing cups

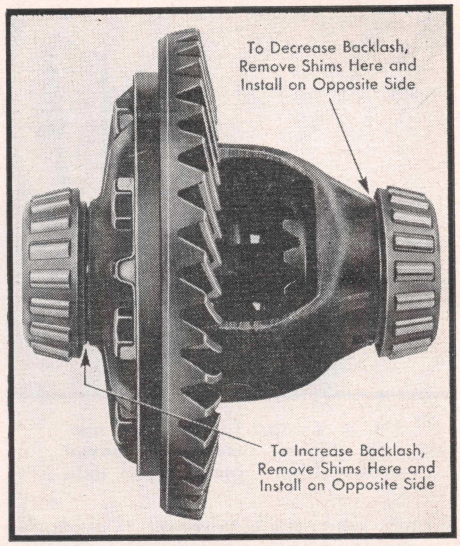

Fig. 5 Method of correcting backlash between ring gear and pinion. Spicer axle

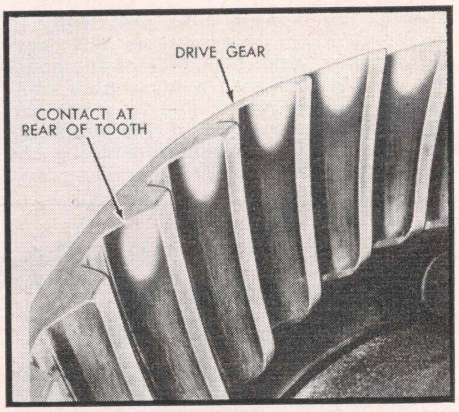

Fig. 6 Short heel contact. Move ring gear toward pinion

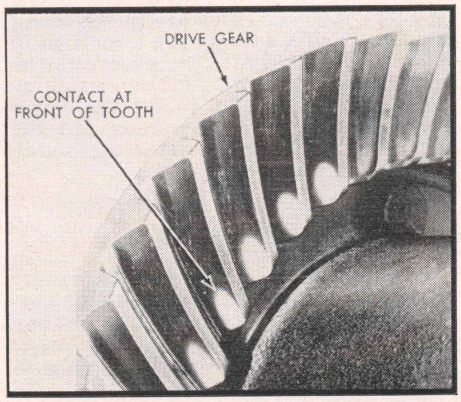

Fig. 7 Short toe contact. Move ring gear away from pinion

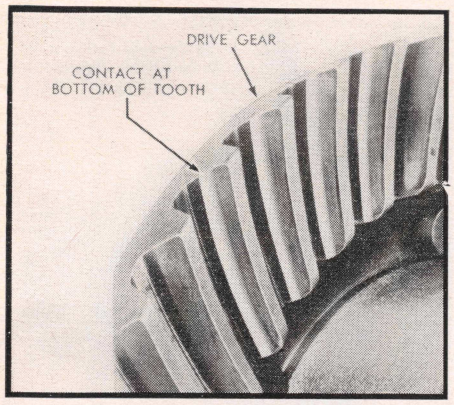

Fig. 8 Contact too low and narrow. Pinion should be moved away from center of axle

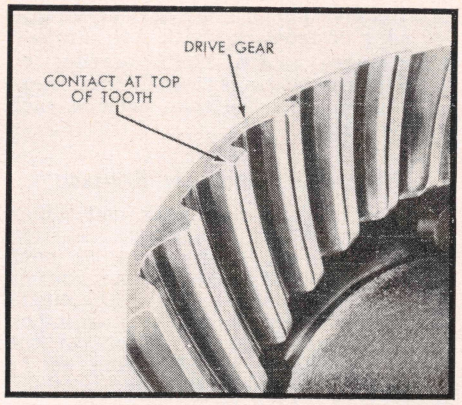

Fig. 9 Contact too high and narrow. Pinion should be moved toward center of axle

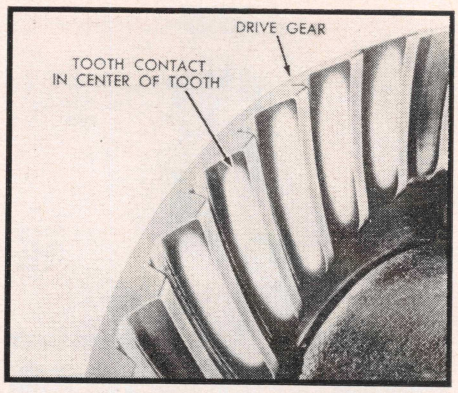

Fig. 10 Correct tooth contact. Gears making contact as shown give best results for quiet operation and long life

slightly when the differential is placed in the housing and then tapping them lightly with a mallet. However, when installing the differential in the housing, be sure the ring gear teeth mesh with the pinion teeth before tapping the bearings in place.

After the bearing cups are firmly in place, install the bearing caps. The bearing caps and gasket surface of the housing are marked with a horizontal numeral and on the other side by a vertical numeral. The position of the numerals should correspond when reinstalling the bearing caps.

Ring Gear & Pinion Backlash, Adjust

Mount a backlash gauge indicator on the carrier and start checking for the correct backlash between the ring gear and pinion. If the backlash is not within the limits of .004″ to .009″, it will be necessary to change the arrangement of the shims back of the bearings. Make corrections in backlash according to Fig. 6, bearing in mind that shims removed from one side must be installed on the opposite side so that the total shim thickness of the right and left side will remain unchanged, and the bearing adjustment undisturbed.

Gear Tooth Contact Pattern

Allowable variations in the carrier or drive pinion may cause the pinion to be too far in or out even when shimmed properly. Thus, the tooth contact must be tested and corrected as necessary or the gears may be noisy.

Paint the ring gear teeth with a light coating of red lead, white lead or prussian blue. Revolve the gears and observe the contact, referring to Figs. 6 to 10.

Steering Gear Section

STEERING GEAR

This steering gear, Fig. 1, is the cam and twin lever type in which the cam is mounted on ball bearings and the lever shaft turns on steel backed bronze bushings.

As the cam is turned by the wheel tube, the follower studs are pulled along the cam groove, causing the lever arm to rotate the lever shaft. The groove in the cam is cut shallower in the straight-ahead driving position to provide closer adjustment between the studs and the cam where most of the steering action occurs.

Cam End Play, Adjust

1. Free the steering gear of all load by disconnecting the drag link and loosening the steering column braces.
2. Loosen the lock nut adjusting screw in the side cover to free the studs in the cam groove.
3. Remove the upper cover stud nuts and raise the housing upper cover to permit removal of the adjusting shims, which are .002″, .003″ and .010″ thickness.
4. Clip and remove one thin shim, tighten down the cover and check the adjustment. There should be a slight drag but the steering wheel should turn freely with the thumb and forefinger lightly gripping the

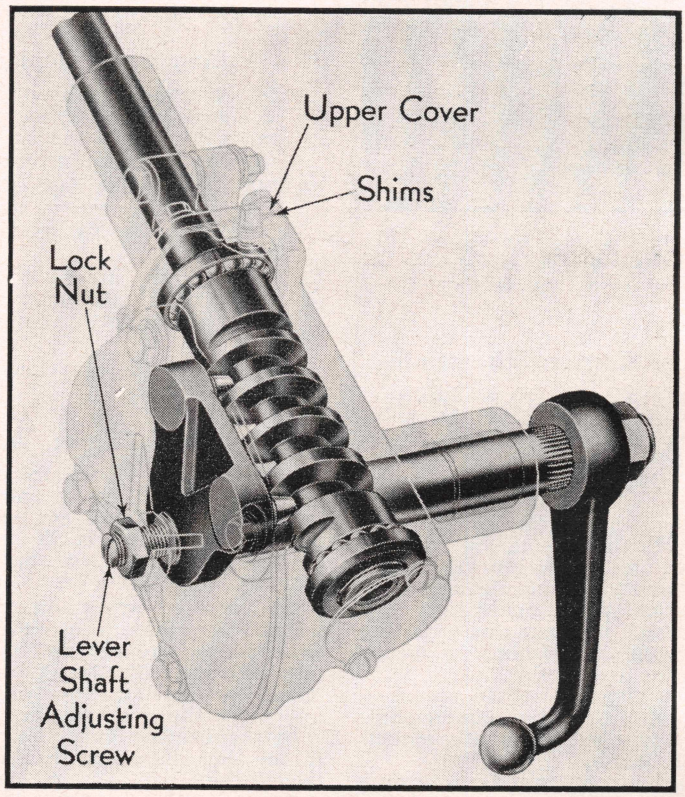

Fig. 1 Ross cam and twin lever steering gear

rim. If necessary, remove or replace shims until the adjustment is correct.

Lever Shaft Backlash, Adjust

1. Centralize the steering gear by turning the wheel all the way to the right. Then, starting from this point, count the number of turns required to reach end of travel to the left. Turn the wheel back half this number of turns to the mid-position.
2. Tighten the side cover adjusting screw until a very slight drag is felt through the mid-position when turning the steering wheel slowly from one side to the other. The gear should not bind in any position but a slight drag should be felt in the mid-position only.
3. After proper adjustment is secured, tighten the lock nut and give the gear a final check for binding.

WHITE STANDARD TRUCKS

INDEX OF SERVICE OPERATIONS

PAGE NO.

AXLES, DRIVING
Eaton Axle Service 176
Locking Differentials 169
Timken Axle Service 209
White Axles 932

BRAKES
Adjustments 252
Air Brake System 259
Hydraulic Brake System 250
Vacuum Brake Boosters 268

CLUTCH 931

COOLING SYSTEM
Cooling System Capacity 916
Water Pump Repairs 929

ELECTRIC SYSTEM
Alternators & Regulators 37
Dash Gauge Service 93
Distributor Specifications 918
Distributor Service 7
Generator Specifications 920
Generator & Regulator Service 27
Ignition, Transistorized 22
Ignition Timing 929
Starting Motor Specifications 917
Starting Motor Service 65
Starter Switch Service 85

ENGINE
Camshaft & Bearings 925
Crankshaft Bearing Specifications 919
Crankshaft End Play, Adjust 927
Crankshaft Oil Seal, Replace 927
Cylinder Head, Replace 920
Cylinder Sleeves 926
Main Bearings, Replace 927
Piston Pins, Replace 927
Piston Rings, Replace 927
Piston & Ring Specifications 919
Pistons & Rods, Remove 925
Piston & Rod, Assemble 926
Pistons, Replace 926
Rocker Arms 922
Rod Bearings, Replace 927
Timing Chain 925
Timing Gear Cover 925

PAGE NO.

Timing Gears 925
Valves, Adjust 920
Valves, Grind 922
Valve Guides, Replace 924
Valve Lifters 924
Valve Rotators 922
Valves, Remove 921
Valve Seat Inserts 923
Valve Specifications 918
Valve Springs 923

ENGINE OILING
Crankcase Capacity 916
Crankcase Ventilation 6
Oil Pump Repairs 928

FUEL SYSTEM
Carburetor Adjustments 929
Carburetor Governors 931
Crankcase Ventilation 6
Fuel Pump Service 104
L.P.G. Carburetion 109

SPECIFICATIONS
Carburetor Adjustment 930
Crankshaft & Bearing 919
Distributor 918
Engine Tightening Torque 921
Generator & Regulator 920
Piston, Pin & Ring 919
Starting Motor 917
Tune Up 918
Valve 918
Wheel Alignment 919

STEERING GEARS 932

TRANSFER CASES 242

TRANSMISSIONS
Clark 110
Fuller 122
New Process 135
Spicer 141
Warner 164
White 932
Powermatic 281

TUNE UP SERVICE 2

MODEL INDEX & ENGINE APPLICATION

ENGINE IDENTIFICATION—White service parts identification plate is attached to the left hand cab door. Stamped on the plate is the model of the engine, transmission, auxiliary transmission, rear axle and front axle. This represents only the equipment on the vehicle when it was shipped from the factory.

Truck Model	Engine Make	Standard Engine	Oil Pan Capacity Refill Qts.	Cooling System Capacity Qts.
WC MODELS				
14	White	110A	12	32
16, 16B	White	116A	12	30
16T, 16PLT	White	120A	12	30
18, 18B, 18T	White	120A	12	30
20, 20B, 20T	White	130A	12	30
20PLT	White	120A	12	30
20ST, 22, 22PLT	White	150A	12	30
22T	White	150A	12	30
22D, 22PLTD	Cummins	JBS-6	28	40
24, 24T, 24PLT	White	370A	15	41
24TD, 24TDA	Cummins	HRB	22	44
26, 26T	White	150A	12	30
26D, 26PLTD, 26TD	Cummins	JBS-6	28	40
26TWD, 26WD	Cummins	JBS-6	28	40
28, 28PLT	White	370A	15	41
28T	White	260A	15	38
28D, 28PLTD, 28TD	Cummins	JBS-6	28	40
28TWD, 28WD	Cummins	JBS-6	28	40
32	White	260A	15	38
32D, 32WD	Cummins	JBS-6	28	40
1664	White	130A	12	30
2262PLT, 2264, 2264T	White	150A	12	30
2462PLT	White	260A	15	38
2464, 2464PLT	White	370A	15	41
2864, 2864T	White	260A	15	38
2864D, 2864DOH, 2864TD	Cummins	JBS-6	28	40
3264	White	260A	15	38
9022TD	Cummins	HRB	22	44
3000 SERIES				
3014, 3014LB	White	55A	5	22
3014WLB	White	116A	12	28
3015, 3015LB	White	55A	5	22
3015WLB	White	116A	12	28
3016, 3016LB, 3016T	White	116A	12	28
3018, 3018T	White	116A	12	28
3020, 3020PLT, 3020T	White	116A	12	28
3022, 3022PL	White	116A	12	28
3022T, 3022PLT	White	116A	12	28
3024, 3024PLT, 3024T	White	370A	15	31
3026, 3026-OH	White	116A	12	28
3028, 3028PLT, 3028-OH	White	370A	15	31
302462PLT, 302462T	White	370A	15	31
302464, 302464PLT	White	370A	15	31
302662	White	116A	12	28
302864	White	370A	15	31
1500, 3000 HI-CAB, 3400TD, 5000TD, 7400TD SERIES				
1500 Gasoline	White	6-130A	8	23
1500 Diesel	Cummins	JN-130	16	20
3000 Gasoline	White	450A	12	31
3000 Diesel	Cummins	JN-130	14	29
3400 Diesel	Cummins	NH-180	24	42
5000 Diesel	Cummins	NH-220	24	40
7400 Diesel	Cummins	NH-180	24	40
4000, 4200, 4400 & 9000 MODELS				
4000 Series	White	450A	12	33
4200 Series	White	450A	12	38
4400 Series	Cummins	NH-220	22	38
9000 Series Gasoline	White	450A	12	33
9000 Series Diesel	Cummins	NH-220	22	34 (1)

(1)—Early models with separate surge tank-40 qts.

GENERAL ENGINE SPECIFICATIONS

Engine Model	No. Cyls. & Valve Location	Bore & Stroke	Piston Displacement Cubic Inch	Compression Ratio	Maximum Brake H.P. @ R.P.M.	Maximum Torque Lb. Ft. @ R.P.M.	Engine Governed Speed	Normal Oil Pressure, Lbs.
6-55A	6 In Block	3½ x 4¼	245	7.00	100 @ 3300	190 @ 1400	3400	40
6-110A	6 In Head	3⅝ x 4⅛	255	6.70	110 @ 3400	194 @ 1400	3400	40
116A	6 In Block	3¾ x 4½	298	6.68	110 @ 3100	230 @ 1200	3100	50–55
120A	6 In Block	3⅞ x 4½	318	6.50	114 @ 2800	250 @ 1200	3000	30–35
130A	6 In Block	4 x 4½	340	6.56	120 @ 3000	270 @ 1200	3000	30–35
6-130A	6 In Head	3⅞ x 4⅛	292	6.94	130 @ 3300	230 @ 1600	3300	40
140A	6 In Block	3⅞ x 5⅛	362	6.03	125 @ 3000	285 @ 1400	3000	30–35
6-145A	6 In Head	4⅛ x 4⅛	331	6.73	145 @ 3200	270 @ 1600	3200	40
150A	6 In Block	4 x 5⅛	386	6.45	135 @ 3000	315 @ 1300	3000	30–35
6-170A	6 In Head	4⅛ x 4⅛	331	7.50	170 @ 3400	297 @ 1600	3400	40
6-185A	6 In Head	4¼ x 4¼	362	7.50	185 @ 3400	320 @ 1200	3400	40
6-186A	6 In Head	4¼ x 4¼	362	7.50	186 @ 3400	320 @ 1200	3400	40
6-200A	6 In Head	4¼ x 4.7	400	7.50	200 @ 3400	365 @ 1600	3200	40
230A	6 In Block	4 x 4½	340	6.56	130 @ 3000	275 @ 1200	3000	50–55
8-235A	8 In Head	4⅛ x 4⅛	440	7.30	235 @ 3400	412 @ 2400	3400	50
250A	6 In Block	4 x 5⅛	386	6.45	145 @ 3000	328 @ 1250	3000	30–35
260A	6 In Block	4⅜ x 5	451	6.25	170 @ 3000	350 @ 1200	2800	40–45
280A	6 In Block	4⅝ x 5	504	6.00	184 @ 3000	405 @ 1200	2800	40–45
290A	6 In Block	4⅝ x 5	504	6.00	186 @ 3000	405 @ 1200	2800	40–45
370A	6 In Block	4¾ x 4¼	452	6.40	175 @ 3050	360 @ 1400	3050	40–45
380A	6 In Block	4⅝ x 5	504	6.00	185 @ 2900	405 @ 1400	2900	40–45
390A	6 In Block	4¾ x 5	531	6.40	200 @ 2900	440 @ 1400	2900	40–45
450A	6 In Block	4 x 5⅛	386	6.80	145 @ 3000	328 @ 1400	3000	50–55
460A	6 In Block	4 x 5⅛	386	6.80	159 @ 3000	336 @ 1400	3000	50–55
462A	6 In Block	4 x 5⅛	386	7.00	172 @ 3200	335 @ 1400	3200	50–55
470A	6 In Block	4½ x 5	477	6.60	200 @ 2900	395 @ 1400	2900	50–55
490A	6 In Block	4¾ x 5	531	6.40	215 @ 2900	440 @ 1200	2900	50–55

STARTING MOTOR SPECIFICATIONS

Unit Part No. ①	Rotation ②	Brush Spring Tension, Oz.	No Load Test			Torque Test		
			Amperes	Volts	R. P. M.	Amperes	Volts	Torque Lb. Ft.
1107037	C	24–28	70	5.65	5500	550	3.25	11
1107224	C	35	65–100	10.6	3600–5100	300–360③	3.5③	...
1107506	C	35	75–95	10.6	6400–9500	520–590③	3.5③	...
1107884	C	35	49–76	10.6	6200–9400	270–310③	4.3③	...
1107920	C	24–28	60	5.0	6000	600	3.0	15
1108111	C	24–28	70	11.3	6000	530	6.7	16
1108455	C	24–28	70	5.0	2500	600	3.0	28
1108533	C	24–28	70	10.0	2800	530	6.7	33
1108607	C	24–28	75	11.25	6000	615	5.85	29
1108840	C	36–40	115	11.6	7000	570	2.3	20
1108863	C	36–40	100	23.0	8000	525	3.0	32
1108872	C	36–40	100	23.0	8000	525	3.0	32
1109173	C	36–40	65	11.4	6000	725	5.0	44
1113708	C	24–28	75	11.25	6000	615	5.85	29
1113800	C	24–28	75	11.25	6000	615	5.85	29
1113328	C	48	65	11.4	6000	500	3.2	28
1114000	C	35	105	11.5	6000	600	2.3	19

①—Stamped on plate riveted to housing.
②—As viewed from drive end; C—Clockwise.
③—Resistance test. Includes solenoid.

TUNE UP & VALVE SPECIFICATIONS

Engine Model	Firing Order	Spark Plugs		Ignition Timing		Valve Seat Angle, Degrees	Valve Clearance H–Hot C–Cold		Valve Spring Pressure, Lb. @ In. Length
		Type⑥	Gap	Timing Mark	Location		Intake	Exhaust	
55A	153624	J8	.028	Mark	Damper	③	.009H	.012H	140 @ 1 13/32
6-110A	153624	⑦	.025	DC 1-10°	Damper	30	.015H	.015H	183 @ 1 13/32
116A	153624	⑦	.025	①	Flywheel	45	Zero	Zero	103 @ 2 1/32
120A	153624	⑦	.025	①	Flywheel	45	Zero	Zero	103 @ 2 1/32
130A	153624	⑦	.025	①	Flywheel	45	Zero	Zero	103 @ 2 1/32
6-130A	153624	⑦	.025	DC 1-10°	Damper	30	.015H	.015H	183 @ 1 13/32
140A	153624	⑦	.025	①	Flywheel	45	Zero	Zero	103 @ 2 1/32
6-145A	153624	⑦	.025	DC 1-10°	Damper	30	.015H	.015H	183 @ 1 13/32
150A	153624	⑦	.025	①	Flywheel	45	Zero	Zero	145 @ 1.758
6-170A	153624	⑦	.025	DC 1-10°	Damper	30	.023C	.023C	183 @ 1 13/32
6-185A	153624	⑦	.025	DC 1-10°	Damper	30	.023C	.023C	183 @ 1 13/32
6-186A	153624	⑦	.025	DC 1-10°	Damper	30	.023C	.023C	183 @ 1 13/32
6-200A	153624	⑦	.025	DC 1-10°	Damper	30	.023C	.023C	183 @ 1 13/32
230A	153624	⑦	.025	Line	Flywheel	45	Zero	Zero	145 @ 1.758
8-235A	15486372④	⑦	.025	DC 1-10°	Damper	30	.023C	.023C	⑤
250A	153624	⑦	.025	Line	Flywheel	45	Zero	Zero	145 @ 1.758
260A	153624	⑦	.025	Line	Flywheel	45	Zero	Zero	②
280A	153624	⑦	.025	Line	Flywheel	45	Zero	Zero	②
290A	153624	⑦	.025	Line	Flywheel	45	Zero	Zero	②
370A	153624	⑦	.025	Line	Flywheel	45	Zero	Zero	180 @ 1.827
380A	153624	⑦	.025	Line	Flywheel	45	Zero	Zero	180 @ 1.827
390A	153624	⑦	.025	Line	Flywheel	45	Zero	Zero	180 @ 1.827
450A	153624	⑦	.025	Line	Flywheel	45	Zero	Zero	150 @ 1.758
460A	153624	⑦	.025	Line	Flywheel	45	Zero	Zero	150 @ 1.758
462A	153624	⑦	.025	Line	Flywheel	45	Zero	Zero	150 @ 1.758
470A	153624	⑦	.025	Line	Flywheel	45	Zero	Zero	182 @ 1.612
490A	153624	⑦	.025	Line	Flywheel	45	Zero	Zero	182 @ 1.612

①—Line at bottom inspection hole or steel ball at side inspection hole.
②—Inner spring 95 @ 1.827″, outer 104 @ 1.827″.
③—Intake 30°, exhaust 45°.
④—Cylinder numbering (front to rear): Right bank 1–2–3–4, left bank 5–6–7–8.
⑤—Intake 183 @ 1 13/32, exhaust 183 @ 1 13/16.
⑥—Champion.
⑦—J6 for 14MM, D10 for 18MM.

DISTRIBUTOR SPECIFICATIONS

Unit Part No. ①	Rotation ②	Cam Angle, Degrees	Breaker Gap, In.	Condenser Capacity, Mfds.	Breaker Arm Spring Tension, Oz. ③	Centrifugal Advance Deg. @ R.P.M. of Dist.		Vacuum Advance		
						Advance Starts	Full Advance	Inches of Vacuum to Start Plunger Movement	Inches of Vacuum for Full Plunger Travel	Maximum Vacuum Advance, Dist. Degrees
1110132	CC	31–37	.022	.20–.25	17–21	1 @ 425	9 @ 1600	5–7	16–18	7.5
1110195	C	31–37	.022	.20–.25	17–21	1 @ 375	9 @ 1300	None	None	None
1111790	C	31–37	.022	.20–.25	17–21	1 @ 375	9 @ 1300	4–6	13	7–8
1111866	C	38–45	.016	.20–.25	19–23	1 @ 275	15 @ 1150	None	None	None
1111905	C	38–45	.016	.20–.25	19–23	1 @ 450	15 @ 1700	None	None	None
1111922	C	38–45	.016	.18–.23	19–23	1 @ 450	13 @ 1875	None	None	None
1112254	C	35	.018–.024	.18–.23	19–23	1 @ 300	10 @ 1300	None	None	None
1112262	C	31–37	.022	.20–.25	17–21	1 @ 375	9 @ 1300	7–8.5	18.5	10
1112263	C	31–37	.022	.20–.25	17–21	1 @ 375	9 @ 1300	None	None	None
1112318	C	31–37	.022	.20–.25	17–21	1 @ 375	9 @ 1300	None	None	None
1112319	C	31–37	.022	.20–.25	17–21	1 @ 375	9 @ 1300	None	None	None
1112329	C	31–37	.022	.18–.23	19–23	2 @ 375	18 @ 1300	None	None	None
1112333	C	31–37	.022	.18–.23	19–23	2 @ 375	12 @ 1300	None	None	None

①—Stamped on plate riveted to housing.
②—As viewed from top; C—Clockwise. CC—Counter-clockwise.
③—Measurement taken from center of breaker point.

PISTON, PIN, RING, CRANKSHAFT & BEARING SPECIFICATIONS

Engine Model	Wristpin Diameter	Piston Clearance, Inch	Ring End Gap, In. (Minimum)		Crankpin Diameter, In.	Rod Bearing Clearance, In.	Main Bearing Journal Diameter, In.	Main Bearing Clearance, Inch	Thrust On Bearing No.	Shaft End Play
			Comp.	Oil						
55A	.875	②	.007	.007	2.2497–2.2507	.0005–.0025	2.746–2.747	.0005–.0025	1	.003–.007
6-110A	1.125	.003④	.018③	.012	2.1705–2.1712	.001–.0032	2.4975–2.4982	.001–.0035	1	.004–.007
116A	1.187	.0040–.0045①	.010	.010	2.187–2.188	.002–.003	2.9995–3.0005	.003–.004	Center	.003–.007
120A	1.000	.0030–.0035①	.010	.010	2.187–2.188	.002–.003	2.9995–3.0005	.003–.004	Center	.003–.007
130A	1.187	.0040–.0045①	.013	.013	2.187–2.188	.002–.003	2.9995–3.0005	.003–.004	Center	.003–.007
6-130A	1.125	.003④	.020③	.012	2.1805–2.1812	.001–.0032	2.5075–2.5082	.001–.0035	1	.004–.007
140A	1.000	.0030–.0035①	.010	.010	2.187–2.188	.002–.003	2.9995–3.0005	.003–.004	Center	.003–.007
6-145A	1.125	.004④	.020③	.012	2.1805–2.1812	.001–.0032	2.5075–2.5082	.001–.0035	1	.004–.007
150A	1.187	.005①	.010	.013	2.187–2.188	.002–.003	2.9995–3.0005	.003–.004	Center	.003–.007
6-170A	1.0625	.003④	.020③	.012	2.3093–2.3100	.001–.0032	2.7485–2.7492	.001–.0035	1	.004–.007
6-185A	1.0625	.003④	.020③	.017	2.3093–2.3100	.001–.0032	2.7485–2.7492	.001–.0035	1	.004–.007
6-186A	1.0624	.003④	.020③	.017	2.3093–2.3100	.001–.0032	2.7485–2.7492	.001–.0035	1	.004–.007
6-200A	1.0624	.003④	.020③	.017	2.3093–2.3100	.001–.0032	2.7485–2.7492	.001–.0035⑤	1	.004–.007
230A	1.187	.005	.013	.013	2.187–2.188	.002–.003	2.9995–3.0005	.003–.004	Center	.003–.007
8-235A	1.0625	.0015	.015	.012	2.4978–2.4985	.001–.0032	2.9976–2.9988	.0015–.0044	5	.004–.008
250A	1.187	.005	.010	.013	2.187–2.188	.002–.003	2.9995–3.0005	.003–.004	Center	.003–.007
260A	1.249	.005①	.013	.013	2.4995–2.5005	.003–.004	3.2495–3.2505	.0035–.0045	Center	.003–.007
280A	1.249	.005①	.013	.013	2.4995–2.5005	.003–.004	3.2495–3.2505	.0035–.0045	Center	.003–.007
290A	1.249	.005②	.013	.013	2.4995–2.5005	.003–.004	3.2495–3.2505	.0035–.0045	Center	.003–.007
370A	1.249	.005②	.013	.013	2.4995–2.5005	.003–.004	3.2495–3.2505	.0035–.0045	Center	.003–.007
380A	1.249	.005②	.013	.013	2.4995–2.5005	.003–.004	3.2495–3.2505	.0035–.0045	Center	.003–.007
390A	1.249	.005②	.013	.013	2.4995–2.5005	.003–.004	3.2495–3.2505	.0035–.0045	Center	.003–.007
450A	1.187	.005②	.013	.013	2.1868–2.1875	.002–.003	2.9995–3.0005	.003–.004	Center	.003–.007
460A	1.187	.005②	.013	.013	2.1868–2.1875	.002–.003	2.9995–3.0005	.003–.004	Center	.003–.007
462A	1.187	.005②	.013	.013	2.1868–2.1875	.002–.003	2.9995–3.0005	.003–.004	Center	.003–.007
470A	1.249	.005②	.013	.013	2.4995–2.5005	.003–.004	3.2495–3.2505	.0035–.0045	Center	.003–.007
490A	1.249	.005②	.013	.013	2.4995–2.5005	.003–.004	3.2495–3.2505	.0035–.0045	Center	.003–.007

①—When checked with a 1″ wide feeler it should require a 7 to 10 lb. pull on a spring scale to withdraw the feeler past the piston.
②—Piston is properly fitted when it can be moved by applying pressure with one or two fingers.
③—For top ring, 2nd ring .012″.
④—When checked with ½″ wide feeler gauge, a pull of 3 to 8 lbs. is required.
⑤—Front bearing .0014–.0039″.

WHEEL ALIGNMENT SPECIFICATIONS

Model	Caster, Deg.	Camber, Deg.	Toe-In, Inch	Kingpin Inclination, Deg.
WC MODELS				
14, 16 Series	2⅚	1	⅛	8
18 Series	2⅚	1	⅛	8
20, 20PLT, 20B, 20T	2⅚	1	⅛	8
20ST	2⅚	1	⅛	8½
22 Series	2⅚	1	⅛	8½
24, 24PLT, 24T	2⅚	1	⅛	8½
24TD, 24TDA	2⅚	1	⅛	6
26 Series	2⅚	1	⅛	8½
28 Series	2⅚	1	⅛	8½
32 Series	2⅚	1	⅛	8½
1664	2⅚	1	⅛	8
2262PLT	2⅚	1	⅛	8½
2264, 2264T	2⅚	1	⅛	8½
2462 PLT	2⅚	1	⅛	8½
2464, 2464 PLT	2⅚	1	⅛	8½
2864 Series	2⅚	1	⅛	8½
9022TD	2⅚	1	⅛	6

Model	Caster, Deg.	Camber, Deg.	Toe-In, Inch	Kingpin Inclination, Deg.
3000 SERIES				
3014, 3015, 3016, 3018 Series	2½	1	⅛	6
3020, 3022 Series	2½	1	⅛	6
3024 Series	2	1	⅛	6
3026 Series	2½	1	⅛	6
3028 Series	2	1	⅛	6
302264, 302462 Series	2	1	⅛	6
302464 Series	2	1	⅛	6
302662	2½	1	⅛	6
302864	2	1	⅛	6
3000 HI-CAB, 3400TD, & 5000TD MODELS				
3000T, 3000TD, 3400TD	2½	1	⅛	6
5000TD, 5400TD	2½	1	⅛	6
4000, 4200, 4400, & 9000 MODELS				
4000T, 9000	2⅚	1	⅛	6
4200T, 4400TD, 9000TD	2⅚	1	⅛	6①

①—FG-900 axle 8°, FE-900 and FD-900 5½°.

GENERATOR & REGULATOR SPECIFICATIONS

★To Polarize Generator: For internally grounded systems, disconnect field lead from regulator and momentarily flash this wire to regulator battery terminal. For externally grounded systems, connect jumper wire from "hot" side of battery to armature terminal of generator.

Generator						Regulator					
							Cutout Relay				
Gen. No. ①	Ground Polarity	Brush Spring Tension, Oz.	Rated Cap. Amps.	Gen. Field Ground Location★	Field Current	Reg. No. ②	Closing Voltage	Arm. Air Gap, In.	Voltage Setting	Current Setting	Current & Voltage Reg. Arm. Air Gap, In.
1102040	Neg.	28	30	External	1.48–1.62	1119001	12.6	.020	14.3	30	.075
1102040	Pos.	28	30	External	1.48–1.62	1118839	12.6	.020	14.3	30	.075
1102739	Pos.	28	30	External	1.75–1.95	1118303	6.4	.020	7.3	30	.075
1102788	Pos.	28	45	External	1.87–2.0	1118828	6.4	.020	7.3	47	.075
1102953	Pos.	25	18	External	1.54–1.67	1118210	12.8	.020	14.3	17	③
1105895	Pos.	28	50	External	1.77–1.93	1118854	6.4	.020	7.3	50	.075
1105895	Pos.	28	50	External	1.77–1.93	1118858	6.4	.020	7.3	52	.075
1105909	Pos.	28	26	External	1.22–1.32	1118316	12.8	.020	14.3	25	.075
1105910	Pos.	28	40	External	1.22–1.32	1118261	12.8	.020	14.3	39	③
1105912	Pos.	28	20	External	1.22–1.32	1118304	12.8	.020	14.3	17	.075
1105936	Pos.	28	32	External	1.54–1.67	1118894	12.8	.020	14.5	31	.075
1106637	Pos.	23	25	External	1.13–1.27	1118214	12.8	.020	14.3	25	③
1106653	Pos.	23	40	External	1.13–1.27	1118261	12.8	.020	14.3	39	③
1106751	Pos.	20	55	External	1.70–1.95	1118832	6.4	.020	7.3	55	.075
1106752	Pos.	20	45	External	⑤	1118834	6.4	.020	7.3	45	.075
1106757	Pos.	20	55	External	1.70–1.95	1118832	6.4	.020	7.3	55	.075
1106758	Pos.	20	45	External	⑤	1118834	6.4	.020	7.3	45	.075
1106801	Pos.	20	40	External	1.37–1.50	1118337	12.8	.020	14.3	40	.075
1106805	Pos.	20	50	External	1.37–1.50	1118838	12.8	.020	14.5	50	.075
1106808	Pos.	20	50	External	1.37–1.50	1118368	12.8	.020	14.3	50	.075
1106821	Pos.	20	40	External	1.37–1.50	1118886	12.8	.020	14.5	40	.075
1106821	Neg.	20	40	External	1.37–1.50	1118887	12.6	.020	14.3	40	.075
1106822	Pos.	20	50	External	1.37–1.50	1118939	12.6	.020	14.3	55	.075
1106822	Neg.	20	50	External	1.37–1.50	1119156	12.6	.020	14.2	50	.075
1106822	Pos.	20	50	External	1.37–1.50	1118838	12.8	.020	14.5	50	.075
1106823	Neg.	20	50	External	1.37–1.50	1119156	12.6	.020	14.2	50	.075
1106909	Pos.	20	50	External	1.37–1.50	1118838	12.8	.020	14.5	50	.075
1106913	Pos.	20	50	External	1.37–1.50	1118838	12.8	.020	14.5	50	.075
1106932	Pos.	20	50	External	1.37–1.50	1118838	12.8	.020	14.5	50	.075
1106987	Pos.	20	35	External	2.14–2.28	1119158	12.2	.020	14.2	35	⑥
1106990	Neg.	20	50	External	2.14–2.28	1119606	12.4	.020	14.2	50	④

①—Stamped on plate riveted to housing.
②—Stamped on regulator base.
③—Voltage regulator air gap, .070″: current regulator air gap, .080″.
④—Voltage regulator air gap, .067″: current regulator air gap, .075″.
⑤—Main field 1.70–1.95 amps. Reverse field, .73–.83 amps.
⑥—Voltage regulator air gap .080″, current regulator air gap .075″.

Engine Section

CYLINDER HEAD, REPLACE

Side Valve Engines

Cylinder heads should be tightened down by starting from the center and working outward from side to side and to the ends. Draw the nuts or bolts down evenly, repeating the operation until all are normally tight. After the engine has been run long enough to warm it up, a final tightening should be made in the sequence shown in Figs. 1 and 2 and to the torque given in the *Engine Tightening* chart.

Overhead Valve Engines

When removing a cylinder head a chisel or screw driver should never be used to pry it loose from the cylinder block. Use an eyebolt in the third or fourth spark plug hole (6-cyl. engines), lifting up on the eyebolt while tapping lightly around the edges of the head with a lead or rawhide hammer or mallet. Be sure all the head stud nuts or bolts have been removed before starting to remove the head.

In replacing the head, the stud nuts or bolts at the center of the head should be tightened first and then work outward from side to side and to the ends. Draw the nuts or bolts down evenly until all are normally tight. After the engine has run long enough to warm it up, make a final tightening with a torque wrench to the torque loads given in the *Engine Tightening Chart* and in the sequence shown in Figs. 3 and 4.

VALVES, ADJUST

All Engines

Adjust the valves to the clearances given in the *Tune Up & Valve Specifications* table. If the valves are to be adjusted warm, run the engine for about 30 minutes to normalize the expansion of all parts.

ENGINE TIGHTENING SPECIFICATIONS★

★Torque specifications are for clean and lightly lubricated threads only. Dry or dirty threads produce increased friction which prevents accurate measurement of tightness.

Engine	Spark Plugs Ft. Lbs.	Cylinder Head Bolts Ft. Lbs.	Intake Manifold Ft. Lbs.	Exhaust Manifold Ft. Lbs.	Rocker Arm Shaft Bracket Ft. Lbs.	Rocker Arm Cover Ft. Lbs.	Connecting Rod Cap Bolts Ft. Lbs.	Main Bearing Cap Bolts Ft. Lbs.	Flywheel to Crankshaft Ft. Lbs.	Vibration Damper or Pulley Ft. Lbs.
55A	28–32	60–65	25–30	25–30	None	None	60–65	90–95	55–60	130–150
6-110A	①	100–105	....	....			65–70	85–90		
116A	30	105–110	....	....	None	None	40–65	70–75	48–52	310–320
120A	30	105–110	....	....	None	None	40–65	70–75	48–52	310–320
130A	30	105–110	....	....	None	None	40–65	70–75	48–52	310–320
6-130A	①	100–105	....	....			65–70	85–90		
140A	30	105–110	....	....	None	None	40–65	70–75	48–52	310–320
6-145A	①	100–105	....	....			65–70	85–90		
150A	30	105–110	....	....	None	None	50–65	80–90	48–52	200
6-170A	①	100–105	....	....			65–70	85–90		
6-185A	①	100–105	....	....			65–70	85–90		
6-186A	30	100–105	....	....	...	...	65–70	85–90	...	...
6-200A	30	100–105	....	....	...	...	65–70	85–90	...	...
230A	30	105–110	....	....	None	None	50–65	80–90	48–52	200
8-235A	①	100–105	....	....			65–70	85–90		
250A	30	105–110	....	....	None	None	50–65	70–75	48–52	200
260A	30	105–110	....	....	None	None	70–75	70–75	48–52	200
280A	30	105–110	....	....	None	None	70–75	70–75	48–52	200
290A	30	105–110	....	....	None	None	70–75	70–75	48–52	200
370A	28	105–110	....	....	None	None	80–120	80–90	48–52	200
380A	28	105–110	....	....	None	None	80–120	80–90	48–52	200
390A	28	105–110	....	....	None	None	80–120	80–90	48–52	200
450A	28	105–110	....	....	None	None	50–65	80–90	40–44	200
460A	28	105–110	....	....	None	None	50–65	80–90	40–44	200
462A	28	105–110	....	....	None	None	50–65	80–90	40–44	200
470A	28	105–110	....	....	None	None	80–120	80–90	48–52	200
490A	28	105–110	....	....	None	None	80–120	80–90	48–52	200

①—30 ft.-lbs. for 14MM, 34 ft.-lbs. for 18MM.

VALVES, REMOVE

Side Valve Engines

After taking off the cylinder head, remove the valve chamber covers and use cloth to block off the holes in the valve chamber to prevent the valve locks from falling into the crankcase.

With a suitable valve spring compressor, raise the springs on those valves which are closed and remove the valve locks. Then turn the crankshaft until those valves which are open are closed and remove the remaining valve locks.

Remove all valves and place them in a board with numbered holes so that they can be identified as to the valve port from which they were removed.

Overhead Valve Engines

After removing the cylinder head and rocker arm assembly, use a suitable spring compressor to compress the springs. Remove the valve locks and springs. Check the keeper grooves in the valve stems for burrs and remove any burrs with a file to prevent scoring of valve guides. Remove the valves and place them in a board with numbered holes so they can be replaced in the same valve port from which they were removed.

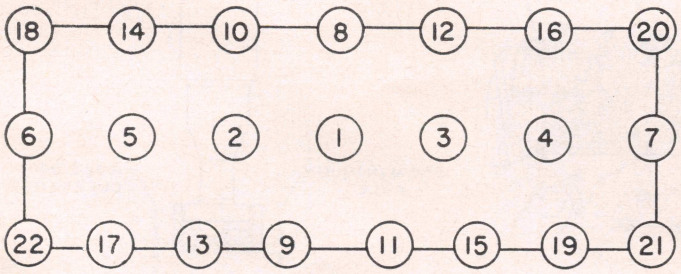

Fig. 1 Head tightening chart for side valve engine heads with 22 bolts

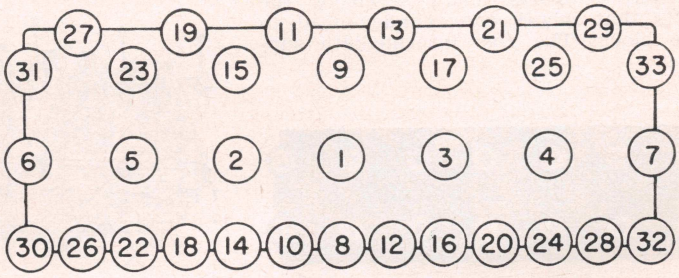

Fig. 2 Head tightening chart for side valve engine heads with 33 bolts

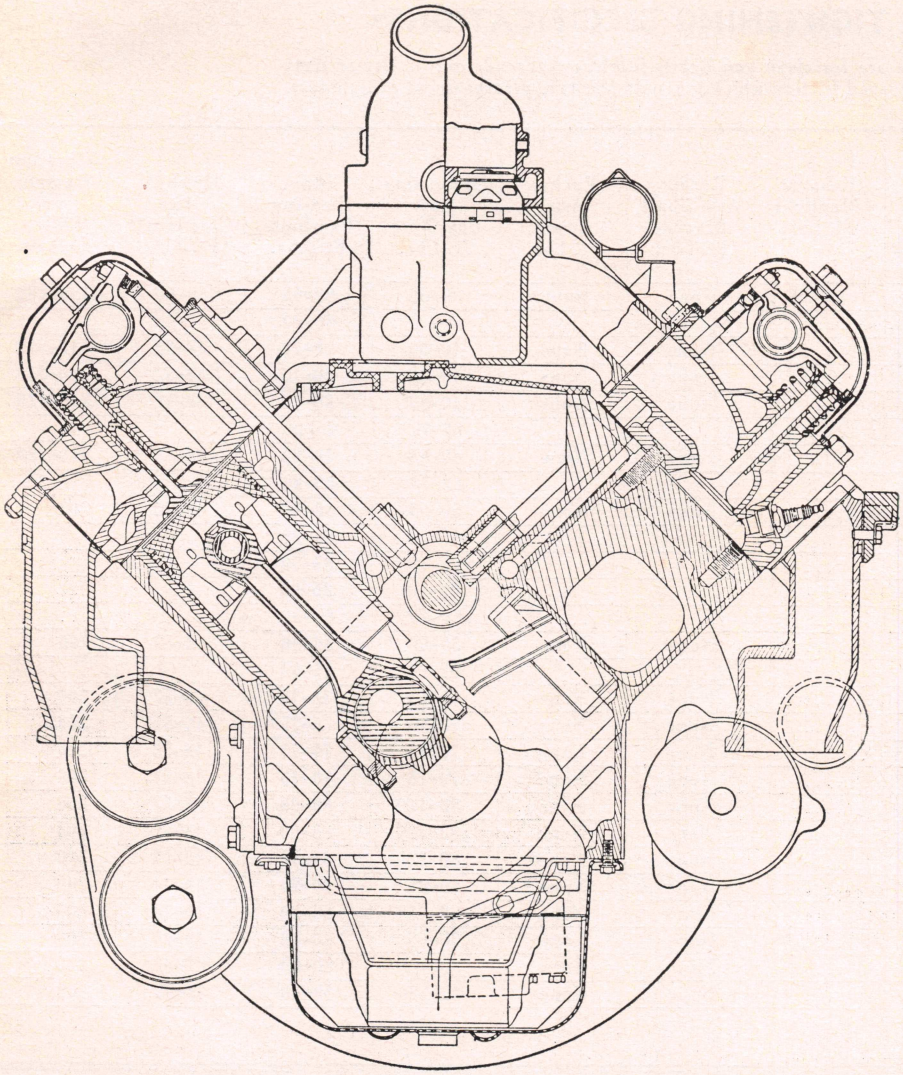

Sectional view of V8 engine

ROCKER ARMS

Overhead Valve Sixes

The valve mechanism is pressure lubricated from the rear camshaft bearing up through an oil passage in rear of block, through slot in cylinder head gasket to passage in head, up to and into the rocker shaft at rear support. The two tubular shafts on which the rocker arms are mounted are held in position by two terminal and five intermediate supports using seven of the bolts that secure the cylinder head to the block. The five intermediate supports are alike, but the two end supports are closed on the outer face, against which one end of the rocker arm shaft is inserted.

Oil holes in the rocker arms are drilled at a 10° offset angle from vertical toward the valve end of the arm. The arm has a split type bronze bushing. Oil holes in the shaft are drilled at right angles to the centerline of the shaft at top and bottom.

When installing new bushings in arms, drill hole in bushing after installation using hole in rocker arm as a guide. Be sure and clean off all burrs on inner side of bushing caused by drilling. When installing rocker arm cover make certain the two leather washers (nut gaskets) are properly in place.

CAUTION: Tighten the holding nuts firmly but not to a point of springing the cover.

Rocker Arm Bushing Data

Rocker Arm I.D., Bushing O.D. (Press fit)	1.1245 - 1.1255
Bushing I.D., finish after assembly	.9903 - .9913
Rocker Arm Shaft O.D.	.989 - .990
Nominal clearance	.0013 -

NOTE: To facilitate assembly of bushing and rocker arm, coat back of bushing with a mixture of white lead and oil before pressing into place.

VALVES, GRIND

All Engines

In grinding valves, the intake seats may be narrower than the exhaust because they are usually larger in diameter, thus providing a total seat area approximately equal to smaller exhaust valve with the wider seat. Also the less severe heat conditions do not require as large a seat area for heat dissipation purposes.

There are also objections to an excessively wide seat. In city or light delivery service, a wide seat collects carbon and particles of dirt that will produce variations or loss of compression, resulting in poor idle and possibly a loss of general performance and economy.

A wide seat in severe service, operating in the presence of dirt or an excess of carbon, will produce a badly pitted seat which may be just as detrimental to valve life as a too narrow seat. Under these conditions, a seat width to the minimum limit would possibly be better. However, the source of trouble (dirt, carbon) should be eliminated, making it possible to retain the wider seat.

VALVE ROTATORS

Some Side Valve Engines

The parts involved in the rotating

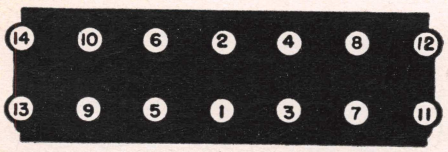

Fig. 3 Cylinder head tightening sequence for overhead valve sixes

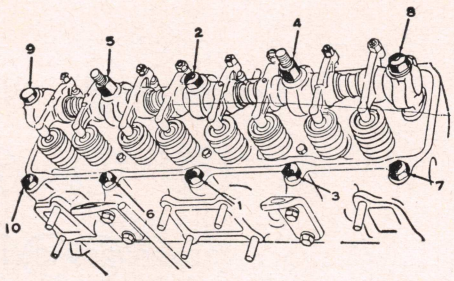

Fig. 4 Cylinder head tightening sequence for V8 engines

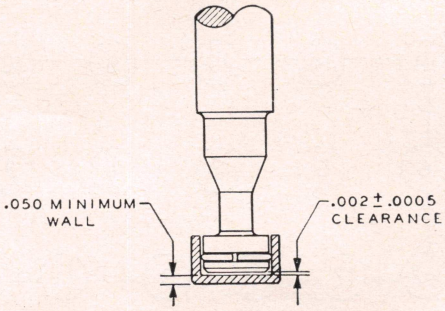

Fig. 5 Free valve stem-to-cap clearance. Side valve engines

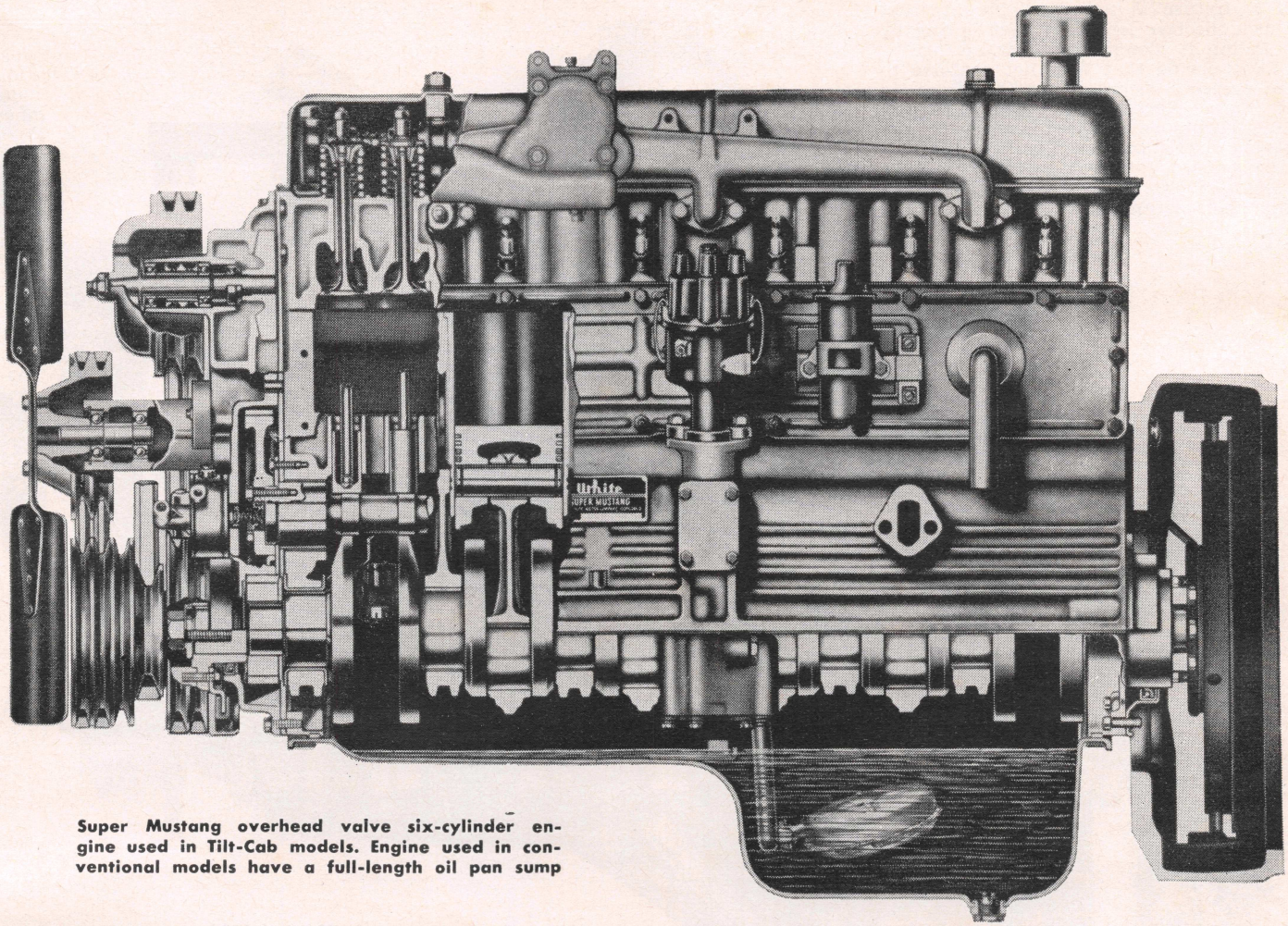

Super Mustang overhead valve six-cylinder engine used in Tilt-Cab models. Engine used in conventional models have a full-length oil pan sump

mechanism are special spring seat retainer, a pair of flat halfmoon keys, a close fitting cap located on the valve stem, and a specially constructed valve stem, Fig. 5.

In order to accommodate valve expansion, the valve lash must be maintained. When camshaft rotation causes this lash or clearance to be taken up, the cap on the valve stem causes the valve keys to lower the spring retainer, removing the load of the valve springs from the valve *before* the valve is raised from its seat. The clearance shown in Fig. 5 should be maintained between the end face of the valve stem and cap. This is the distance the spring retainer is lowered *before* the valve is moved. The slow valve rotating motion is caused by vibration of the valve, the flowing of exhaust gases around the valve head, and a slight rotation motion imparted to the valve by the valve spring.

Whenever valve work is done, check the clearance, using a special gauge which is available for the purpose. If there is no clearance, grind off the end of the valve stem. If the clearance is too great, grind off the open end of the valve cap.

If the special gauge is not available, a check for clearance can be made by holding the assembled valve and rotating mechanism in the hands. With one hand press down on the valve cap and with the other hand turn the valve. If the valve turns readily at least it indicates that there is clearance present.

Overhead Valve Engines

Increased exhaust valve life is accomplished in these engines by the use of "Roto Valve" mechanism which is a special valve spring retainer and cap located on the end of the valve stem.

In operation, the rocker arm striking the cap lifts the retainer first, thus taking the spring load off the valve before lifting it from its seat. When the valve is in the raised position, it is free to rotate due to the vibration of the system.

When checking valve clearances, the feeler gauge is placed between the cap and socket as there is no other flat surface in the valve train.

VALVE SEAT INSERTS

Since these inserts are too hard to reface by ordinary hand grinding methods, a high speed grinder or special lapping equipment should be used to perform this operation. When using this equipment, be sure valve guides are clean and the valve guide pilot is a snug fit in order to assure a concentric finish. Finished seats should be checked with a dial indicator and runout should not exceed .001".

To remove an insert (if a suitable puller is not available), drill two holes at opposite sides of the insert but not all the way through. Then cut through the undrilled portion with a sharp chisel and remove the two pieces.

To install a new insert, first remove all burrs and sharp edges from the seat recess. Then chill the new insert with "dry ice" to obtain maximum contraction of the metal and place it in the recess. If necessary, the insert may be pounded in by using a round driver the same size as the insert and pounding on same with a hammer.

If a standard insert is too loose, an oversize insert should be used. Oversize inserts are $\frac{1}{16}$" larger than the standard and, therefore, the recess should be bored out $\frac{1}{16}$" to accommodate the oversize insert.

When installed, peen the block or head around the insert bore to insure it remaining in place.

VALVE SPRINGS

After taking out the valves, remove the springs and wash them with gasoline or other suitable solvent. Examine the springs for damage or corrosion due to acid etching, which will develop into surface cracks and cause spring failure.

Check the valve spring tension on a suitable test fixture if one is available.

If a fixture is not available at least check the free length of each spring by standing it alongside a new spring.

Any spring that does not conform to the pressure specifications (see *Tune Up & Valve Specifications* table) within 10% should be replaced. Likewise, any spring that stands shorter than the new spring used for comparison should be discarded. Of course, cocked springs should be scrapped.

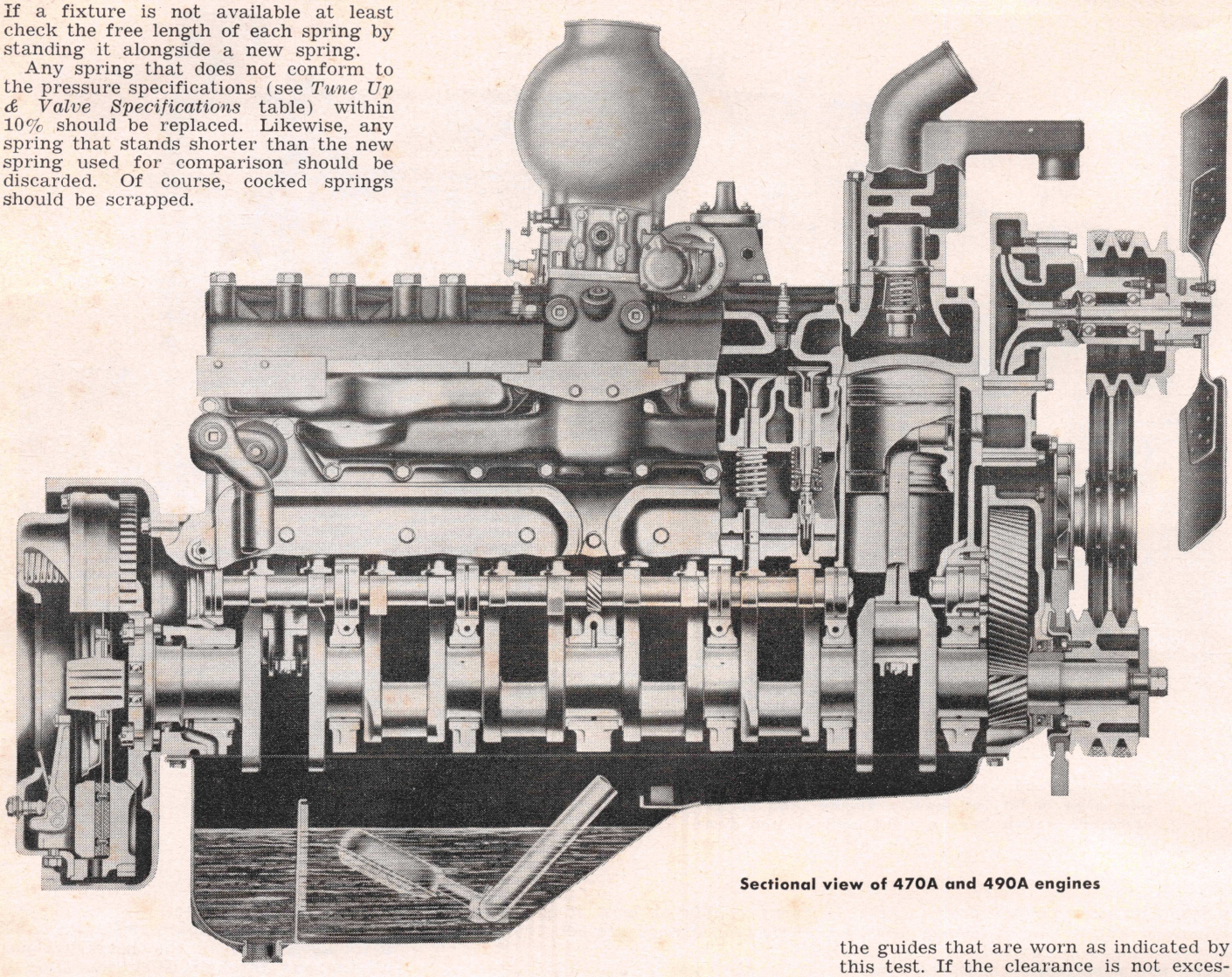

Sectional view of 470A and 490A engines

VALVE GUIDES, REPLACE

All Engines

Clean the valve guides with a wire guide brush and clean the valves with a wire wheel brush, making sure that all carbon is removed from the top and bottom of the heads as well as the gum which might have accumulated on the stems.

Check the clearance between valve stems and guides carefully. Excessive clearance between valve stems and guides will cause improper seating and burned valves. When there is too much clearance between intake valve stems and guides, there is a tendency to draw oil vapor through the guide on the suction stroke, causing excessive oil consumption, fouled spark plugs and poor low speed performance.

Valve stem-to-guide clearance may be checked with special "GO" and "NO-GO" gauges. Lacking these, an alternate method is to take a new valve and place it in each valve guide and feel the clearance by moving the valve stem back and forth. If this check shows excessive clearance, it will be necessary to replace the guides that are worn as indicated by this test. If the clearance is not excessive when checking with a new valve but is excessive when checked with the old valve, it is an indication that the old valve stem is worn and a new valve must be installed.

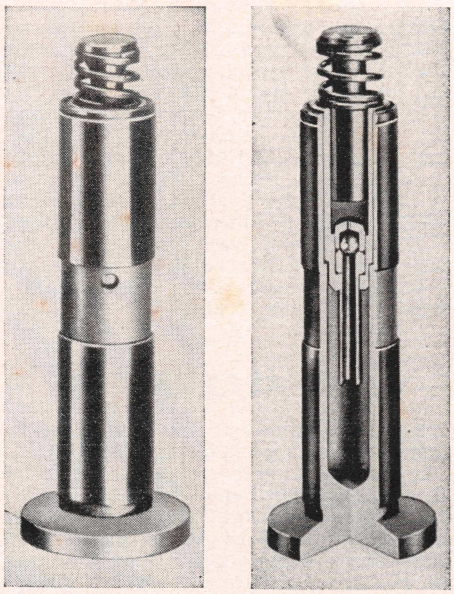

Fig. 6 Cutaway and exterior views of hydraulic valve lifter. Side valve engines

VALVE LIFTERS

Hydraulic Type

Fig. 6 illustrates the hydraulic lifter used in these engines. Because of the close fit between the cylinder and plunger, the plunger and cylinder should never be mis-matched.

Failure of a hydraulic valve lifter is generally caused by an inadequate oil supply or dirt. An air leak at the intake side of the oil pump or too much oil in the engine will cause air bubbles in the oil supply to the lifters, causing them to collapse. This is a probable cause of trouble if several lifters fail to function, but air in the oil is an unlikely cause of failure of a single unit.

Remove the lock ring from the top of the lifter body and slide the complete unit out of the bottom of the lifter bracket. Take out the cylinder and plunger. Remove the plunger from the cylinder by twisting plunger counter-

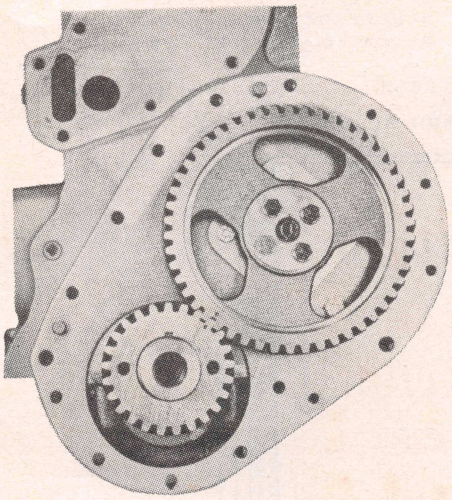

Fig. 7 Punch marks aligned for correct valve timing with No. 6 piston at top of its firing stroke. Overhead valve sixes

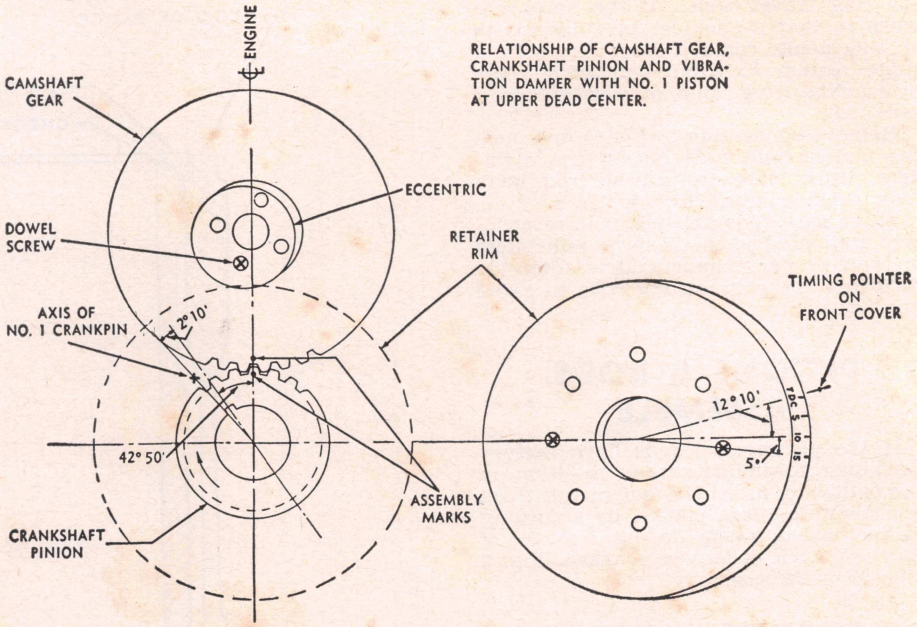

Fig. 8 Relationship of engine timing components. V8 engines

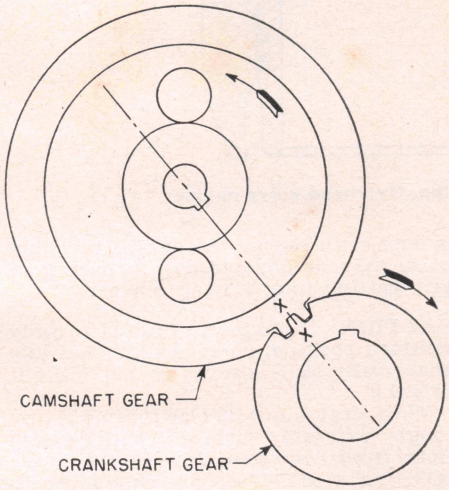

Fig. 6A Valve timing on all timing gear driven side valve engines

clockwise to release the spring on the plunger.

Wash all parts in clean kerosene. *Never use gasoline or other fast drying agents.* Wash cylinder thoroughly until ball check rattles in cylinder.

To assemble, insert plunger in body. Plunger spring should be locked into cylinder body by turning clockwise with a twist of the plunger. Insert the lifter in the lifter bracket.

Before installing valve lifters in the engine, note the following items to make sure lifters are assembled properly. And be sure they are installed in the original position.

1. Ball check should rattle when cylinder unit is shaken.
2. Plunger should bounce back when pressed quickly into cylinder and released.
3. Plunger spring should be locked into cylinder body with a twist of the plunger.
4. Cylinder should slide smoothly into lifter body when free of oil.

Do not attempt to fill lifters with oil before assembly as this will be done automatically when the engine is running. After servicing and replacing the lifters, measure the clearance between the end of the plunger and valve stem. The valve must be fully seated. Use a feeler gauge to check the clearance, which should be from .040 to .080″. If the clearance is more than .080″, grind in the valve seat just enough to obtain the proper clearance. If the clearance is less than .040″, carefully grind the end of the valve stem.

Overhead Valve Engines

These engines are equipped with barrel type lifters which can be lifted out from above after taking out the push rods. With this construction the oil pan and camshaft need not be disturbed.

TIMING GEAR COVER

Overhead Valve Sixes

Before removing the timing gear cover it will be necessary to remove the oil pan and take out the five fore-and-aft bolts between front oil pan arch and timing gear cover. Before removing cover bolts from front face, tap edge with soft hammer and lift off over two locating dowels.

TIMING GEARS

Side Valve Engines

Before removing timing gears be sure timing marks are legible. And when replaced valve timing will be correct if "X" marks on both gears are meshed as shown in Fig. 6A.

Overhead Valve Engines

Both timing gears are punch-marked to automatically establish valve timing. On six-cylinder engines the punchmarks are aligned as shown in Fig. 7 with No. 6 piston on top of its firing stroke.

On V8 engines valve timing is correct when timing gears are installed so that the timing marks on the gears are meshed. Fig. 8 illustrates the relationship of the parts.

TIMING CHAIN

55A Engine

The timing marks on both sprockets should be opposite each other and in line with the centers of both the camshaft and crankshaft.

CAMSHAFT & BEARINGS

Camshaft end play is controlled by a thrust plate just behind the camshaft gear. End play should be held to about .005″ and can be checked by forcing the shaft back to the limit of its end play and inserting a feeler gauge between the thrust plate and the front end of the shaft. If end play is excessive, install a new thrust plate.

On overhead valve engines, steel-backed, lead babbitt-lined split bearings are used.

On side valve engines, camshaft bearings must be installed in sets and line-reamed to provide the proper operating clearance. Be sure oil feed holes in bearings and block are aligned to assure adequate lubrication.

PISTONS & RODS, REMOVE

After removing the cylinder head and oil pan, examine the cylinder bores above

the ring travel area. If the bores are worn so that a shoulder or ridge exists at this point, remove the ridge with a ridge reamer to avoid damaging rings or cracking ring lands of pistons during removal.

Remove connecting rod caps and push the pistons and rods out of the cylinders, using care to prevent rod bolts from nicking crankshaft journals.

Make sure rods and pistons are properly numbered so they can be reinstalled in their proper cylinders. It is advisable to install the caps on the rods to avoid mixing parts.

PISTONS & RODS, ASSEMBLE

If the pistons and rods have factory markings to indicate their position in the cylinders, assemble and install them according to these marks, or according to the marks made during removal if they were not otherwise marked. Fig. 9 illustrates V8 assembly.

PISTONS, REPLACE

All Engines

When fitting a piston, wipe the cylinder wall clean with a cloth and insert the piston upside down in the bore (rings and pin removed). Use a feeler gauge which is long enough to extend the full length of the piston. The thickness of the feeler should be the same as the piston clearance given in the chart. With the feeler hooked to a spring scale, a pull of 6 to 10 lbs. should be required to pull the feeler past the piston.

The fit of the piston should be checked at different points in the cylinder bore. And after fitting, each piston should be stamped with a number or otherwise marked with the cylinder number to which it belongs.

Whenever a single piston is replaced in service, the new piston should match the weight of the old piston within ¼ oz. in order to retain balance in the engine.

CYLINDER SLEEVES

Overhead Valve Engines

Whenever piston or ring installation is to be made, check cylinder sleeve bores for scores, out-of-round and taper. If out-of-round .006″ or more or if taper wear is .006″ or more, sleeve should be replaced. Reboring of sleeves and use of oversize pistons is not recommended. In many cases sleeves can be pulled out by hand to remove from block. When tight, do not drive out by pounding with metal objects as sleeves may be damaged or block distorted.

If rings only are to be installed, prior to removing pistons, remove ridge at top of each cylinder wall. When performing this operation, use particular care not to cut beyond the diameter of the cylinder wall. Leave approximately .001″ stock at ridge and remove with a hone. Each cylinder should be honed to break the glaze and to provide a better surface for wear-in of the new piston rings.

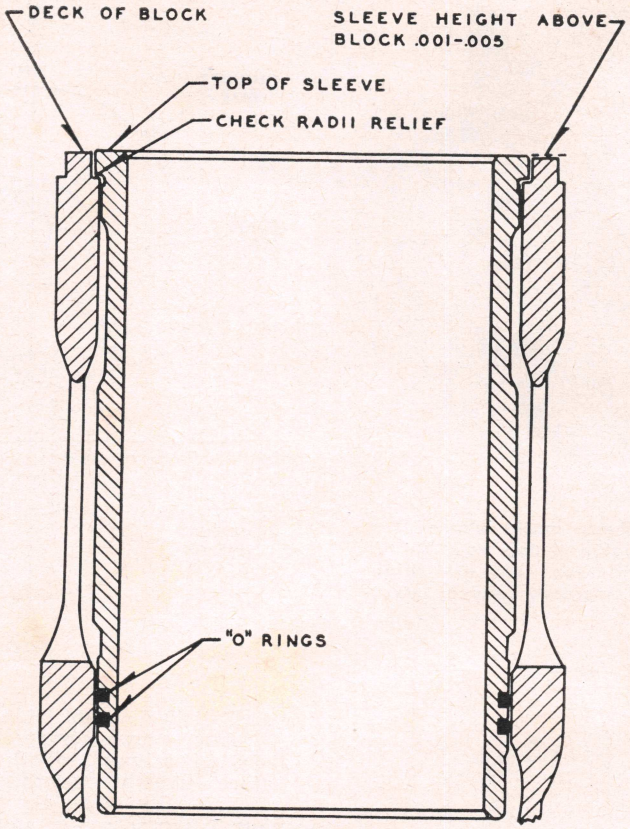

Fig. 10 Cylinder sleeve installation. Overhead valve engines

The cylinder block must be thoroughly cleaned after completion of honing operations.

Drain and dry out block surrounding sleeve area to prevent dripping or seepage of water on bearings. If engine is installed in stand RS-C356, rotating block so that crankshaft is vertical will materially aid in keeping any water or grit off bearing surfaces. If re-ringing is done with engine in chassis, breaking glaze may be omitted due to hazard of grit getting into bearing surfaces.

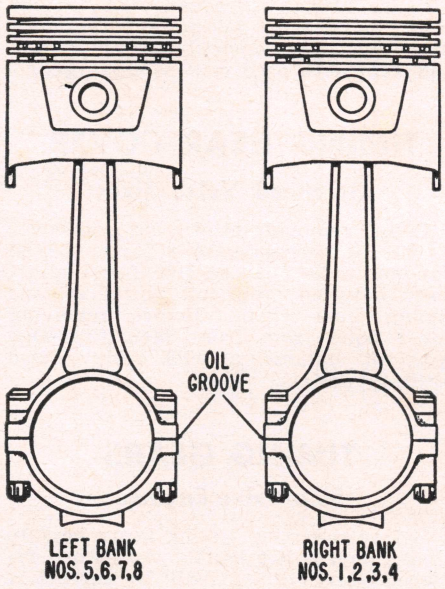

Fig. 9 Correct assembly of pistons and rods. V8 engines

CAUTION: If engine is rotated to fully inverted position, make certain that any abnormally loose sleeves do not fall out of block.

With sleeves out of block, remove any rough external surfaces with emery cloth *from chamfers only* (above lower "O" ring area). Use only sandpaper to clean other adjacent surfaces of sleeve or block.

IMPORTANT: Always install new neoprene sealing rings ("O" rings) whenever changing or reinstalling a sleeve. Be particularly careful that "O" rings are installed without a twist, otherwise a leak is likely to develop around "O" ring seam. Coat sealing rings with clean hydraulic fluid or glycerine before installing on sleeve. Be certain top counterbore in block for flange of sleeve is clean before attempting to insert sleeve. Clean the seal lands in block and coat with hydraulic fluid or glycerine before installing sleeve.

Install sleeve and seal assembly in its position in lower diameter of crankcase by allowing sleeve to find its own seat, then with hand pressure on top of flange rotate sleeve right and left and quickly push in place, Fig. 10. *Do not force sleeve into block.*

When sleeve is seated check and make sure that top flange, extends .001″ to .005″ above block. If sleeve flange is below planed surface of block it will not be sealed and held in place by the cylinder head and gasket which may

then allow water seepage into the cylinder bore.

Shims of .003″ and .006″ thickness are available with which sleeve protrusion may be corrected to the allowable tolerance as shown in the following table.

Recommended Schedule For Shim Installation

Height Measured	Add Shim	Height Above Deck
.001″ above deck	None	.001″
.000″ even	.003″	.003″
.001″ Below deck	.003″	.002″
.022″ Below deck	.006″	.004″
.003″ Below deck	.006″	.003″
.004″ Below deck	.006″	.002″
.005″ Below deck	.006″	.001″
.006″ Below deck	.003″ & .006″	.003″
.077″ Below deck	.003″ & .006″	.002″
.008″ Below deck	.003″ & .006″	.001″
.009″ Below deck	.006″ & .006″	.003″
.010″ Below deck	.006″ & .006″	.002″

Whenever a sleeve height is adjusted by the use of shims, the resulting protrusion should be within .002″ of that of the adjacent sleeves if possible.

PISTON RINGS, REPLACE

When new piston rings are to be installed without reboring cylinders, the glazed cylinder walls should be slightly dulled, but without increasing the bore diameter. This is done with a "Glazebuster" or with a hone equipped with the finest grade of stones.

New piston rings must be checked for clearance in piston grooves and for gap in cylinder bores. Cylinder bores and piston grooves must be clean, dry and free of carbon and burrs.

Check the clearance of each ring in its piston groove by installing the ring and then inserting feeler gauges *under* the ring. Any wear that occurs in the piston groove forms a step or ridge at the inner portion of the lower land. If gauges are inserted above the ring, the ring may rest on the step instead of on the worn portion of the lower land, and a false measurement of clearance will result.

If the piston grooves have worn to the extent that relatively high steps or ridges exist on the lower lands, the piston should be replaced because the steps will interfere with the operation of the new rings and the ring clearances will be excessive. Piston rings are not furnished in oversize widths to compensate for ring groove wear.

To check the end gap of rings, place the ring in the cylinder in which it will be used. Square it in the bore by tapping with either end of the piston, then measure the gap with feeler gauges. If necessary to increase the gap, file the ends of rings carefully with a smooth file.

PISTON PINS, REPLACE

Piston pins are of the full floating type, being free to rotate in the piston bosses as well as in the connecting rod bushings at operating temperatures. Snap rings, located in the grooves in the piston bosses, prevent the pins from contacting the cylinder walls.

To fit a pin, heat the piston in a pail of boiling water until heated thoroughly. Then remove the piston and quickly insert the pin. A good fit is one which requires a slight push of the thumb to insert the pin.

ROD BEARINGS, REPLACE

Connecting rods are fitted with precision type bearings, held in position by locking lugs which fit into grooves cut in the rods and in the caps.

Bearing clearance may be checked with Plastigage, which is available at any auto parts jobber. Instructions for its use are furnished with the package.

Lacking Plastigage, use a piece of tough paper or shim stock ¾″ square which measures about .0005″ under the maximum allowable bearing clearance. Oil the shim on both sides and lay it in the center of the bearing. Install the assembled bearing and cap and tighten the cap nuts to the torque given in the table.

The clearance is correct if the rod can be moved endwise when tapped lightly with a hammer. If the rod can be moved endwise by hand, clearance is too great. On the other hand, if the rod will not move when tapped lightly with a hammer, not enough clearance is present.

Service Note

In checking bearing clearance, the White Company recommends the use of virgin lead wire. With this method, apply a thin film of SAE 20 engine oil to the bearing to be checked and place a piece of the lead wire (⅜″ long) on each end of the rod bearing crankpin, parallel to the centerline of the crankshaft. Then install the rod cap, rotating the crankshaft through a 15° arc as the cap nuts are being tightened. When the caps have been tightened to normal tension, free up the bearing by turning the crankshaft through a 15° arc and remove the cap and wire. Measure the flattened wire with a micrometer, which will be the clearance of the bearing.

MAIN BEARINGS, REPLACE

Insert type main bearings are used and may be replaced without removing the crankshaft. Main bearings should be replaced in sets and under no circumstances should they be filed or otherwise altered in an attempt to affect an adjustment.

Plastigage may be used to check the fit of bearings and instructions for its use are furnished with the package. The White Company, however, recommends the use of virgin lead wire to check the fit of bearings. This method is described under *Rod Bearings, Replace.*

CRANKSHAFT END PLAY, ADJUST

Side Valve Engines

Crankshaft end thrust is taken on the flanges of the center main bearing (front bearing on 55A engine). Through normal wear end play will seldom become excessive but whenever new bearings are fitted, check the end play by forcing the crankshaft to the limit of its end play and check the clearance with a feeler gauge. If end play is greater than .007″, install new thrust bearing shells. If clearance is less than .003″, the bearing flanges may be dressed down to obtain the desired result.

Overhead Valve Engines

On six-cylinder engines crankshaft end thrust is taken up on the front main bearing. On early models it is controlled by flanges on the upper half only of this bearing. Later models have thrust flanges on upper and lower halves.

On V8 engines crankshaft end play is controlled by flanges on the rear main bearing.

A quick check of crankshaft end play can be made by anchoring a dial indicator to the chassis back of the radiator with the indicator on the front of the crankshaft pulley. Throwing the clutch in and out will cause a forward movement of the crankshaft to the extent of its end play. Using a piece of 2 x 4 wood ahead of the pulley, pry the crankshaft back (with foot off clutch pedal).

If check shows end play in excess of .012″, immediate correction of the condition is absolutely necessary because if the engine is allowed to run with excessive end play it will destroy the highly polished face of the crankshaft against which the bearing thrust flanges ride. Ultimately, this polished surface will be scored to the extent that a new thrust bearing will wear out in a very few miles. When this condition is reached the only correction is a new crankshaft.

CRANKSHAFT OIL SEAL, REPLACE

Side Valve Engines

On some of these engines oil sealing at the rear main bearing is controlled by an oil slinger integral with the crankshaft and running in a groove leading into the oil pan. The end of the rear main bearing pipe extends below the level of the oil in the oil pan to prevent crankcase pressure from interfering with the return of the oil.

On other engines, in addition to the oil slinger, an oil seal, consisting of two pieces of special packing is used. One piece is installed in tne groove in the rear bearing cap and the other piece is installed in a similar groove in the cylinder block.

Position the rear bearing seal in the groove in the cylinder block. Lay an improvised mandrel in the bearing bore and strike the mandrel with a hammer to drive the seal into the groove. Install the seal in the bearing cap in a similar manner. Using a sharp knife, cut off both ends of each seal which project out of the grooves. When cutting off the ends of the seals, do not leave frayed ends which would prevent proper seating of the bearing cap if the ends should extend between cap and cylinder block.

Overhead Valve Sixes

To replace the rear oil seal it is necessary to remove flywheel, oil pan and oil pan rear arch.

Many cases of oil leakage at the rear of the engine are caused by seals being damaged before and during installation.

In handling this seal, be careful that the inner seal part is not touched by dirt from the hands. Inspect before installing. If it is the least bit dirty or has any grit on it, wash in oleum spirits before installing. Any slight piece of foreign material which might become imbedded in this seal will cause it to leak.

Make sure that the hub of the crankshaft which the seal contacts is absolutely clean, polished and not scored. Invariably when the flywheel is removed, the edge of the crankshaft hub is burred or scratched when freed from the recess where it sets into the flywheel. Be sure and remove all burrs on hub and hub chamfer, eliminating all sharp and jagged edges before fitting seal over crankshaft hub.

As the seal is an expanding fit, be particularly careful not to distort or break the edge when fitting it over the crankshaft hub.

Secure housing or retainer to block from rear with 4 cap screws and tighten. Install rear arch. Secure retainer to arch from front with 3 lower and 2 upper cap screws. First secure all cap screws finger tight. Tighten screws top to opposite bottom alternately. Tighten lower center last.

The rear oil seal lip should be coated with grease (not oil) prior to installation on the crankshaft hub. The grease should be applied to the hub as well as the seal lip in order to avoid wiping the lubricant off the hub when the seal is installed. The purpose of this procedure is to prevent the seal from running with insufficient lubrication and, therefore, becoming excessively hot before crankcase oil can reach it. This grease application will also facilitate sliding the seal over the hub. Use Lubriplate #320, or an equivalent which has a relatively high melting point.

When bolting the housing into place, put Permatex #2 in the cap screw holes to keep internal pressure from forcing oil out between the cap screw and hole threads.

V8 Engines

Oil sealing at the rear main bearing is controlled by a wick-type seal in the same manner as for some side valve engines outlined above.

OIL PUMP REPAIRS

Side Valve Engines

These pumps can easily be disassembled by taking off the upper drive gear and bottom cover, after which the internal parts can readily be removed. Be sure to examine the pump pressure ball check, spring and seat, and if these parts show wear, new parts must be installed.

Service Note

On some engines, the oil pump is the rotor type. It is easily disassembled but the following are several points which should be noted when the pump is serviced.

1. The end clearance should be held to .0015 to .0045″ on the inner rotor and .001 to 004″ on the outer rotor. These measurements are the difference between the depth of the counterbore in the body, including the gasket, and the length of the rotor. Always use a new gasket in assembling the pump.
2. The inner and outer rotor should have a tooth clearance of .002 to .010″.
3. The outer rotor outside diameter clearance should be from .003 to .010″. The clearance is measured between the outside diameter of the outer rotor and the inside diameter of the pump body.
4. Always install a new snap ring when the rotor has been removed from the shaft.
5. When assembled, the pump should turn finger free before installing on the engine.

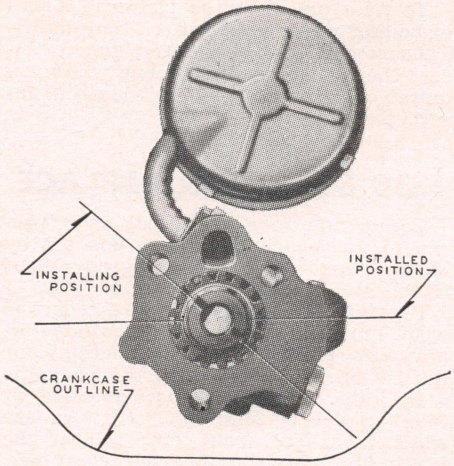

Fig. 11 Installing oil pump on overhead valve sixes

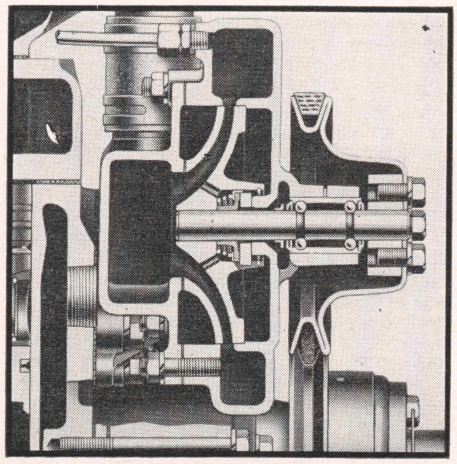

Fig. 12 Sealed bearing type water pump

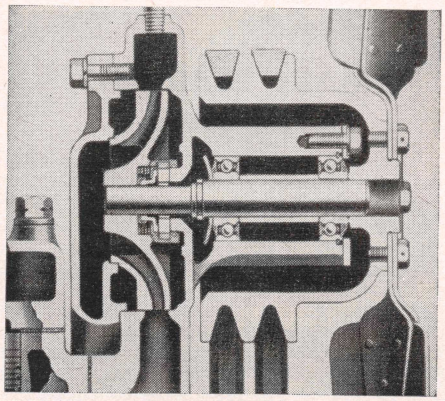

Fig. 13 Water pump with removable bearings

Service Note

On 110A, 120A, 140A, 150A, 250A, whenever the oil pump is removed, it is advisable to remove the ignition distributor as well, since it is driven directly from an extension of the oil pump shaft.

To install the pump, crank the engine until No. 1 piston is on its compression stroke and stop when it is on top dead center, as indicated by the timing mark on the flywheel. With the engine in this position, install the oil pump. Replace the oil pump extension shaft. With the tongue on the lower end of the shaft in mesh with the oil pump shaft groove, check the position of the groove in distributor end of the extension shaft. Location of the oil pump drive gears may not permit exact positioning of the groove (45 degree angle from centerline of crankshaft); however, make sure the pump gear is not meshing one or more teeth off the prescribed position.

Installation, 6 Cyl. Engines

When installing oil pump, distributor should be removed to prevent interference by distributor shaft tongue.

If engine has been completely disassembled, oil pump should not be installed until crankshaft, camshaft and timing gears have been installed. Install oil pump as follows:

1. Turn engine over to No. 6 firing position. Be sure marks on timing gears are aligned as shown in Fig. 7.
2. Place oil pump distributor drive slot in position shown in Fig. 11. Note that slot is offset and that narrow segment of drive end is at top and rotated to the right.
3. Install long studs in two bolt holes in crankcase as pilots. Place gasket on pilot studs. Slide pump assembly into position in crankcase being careful not to turn gear before it meshes with drive gear on camshaft. As oil pump gear meshes with camshaft drive gear it rotates counterclockwise approximately two teeth and slot then faces as shown in Fig. 11, installed position.
4. Mark No. 6 terminal position on distributor body and install distributor. Rotor should face No. 6 mark when distributor cap snap springs are in a line approximately parallel to cylinder block.

CAUTION: Do not tighten oil pump cap screws until distributor is installed. Check carefully to determine that dis-

tributor and oil pump assemblies rotate freely together after tightening pump fastenings.

WATER PUMP REPAIRS

Sealed Bearing Type, Fig. 12

This type pump is packed with lubricant at the time of assembly and requires no further lubrication. When disassembling, carefully note the arrangement of the seal parts so that correct assembly may be assured.

Never soak the shaft and bearing assembly in cleaning solvent because it will dissolve the lubricant. To clean the shaft and bearing, merely moisten a cloth with cleaning fluid and wipe away any surplus lubricant or other foreign matter.

Be sure the face of the housing against which the thrust washer turns is smooth and true. If not, smooth it up with a special water pump facing cutter.

Removable Bearing Type, Fig. 13

To service the pump, remove the fan pulley. Release the snap ring from the front bearing. Take off the rear cover plate. Press the shaft out of the impeller from the rear and remove the shaft and bearings as a unit. Press the shaft from the bearings, sleeve and slinger. Remove the seal from the impeller, noting the arrangement of the seal parts so that the new seal may be installed correctly.

Before assembling the pump, check the thrust face of the housing and if the surface is not smooth or true it should be smoothed up with a special water pump facing cutter.

To assemble the pump, apply a liberal quantity of grease to the bearings and to the shaft between the bearings. Then install the shaft and bearings in the housing as a unit. Press the impeller and seal assembly down onto the shaft, pressing it down just flush with the end of the shaft. Complete the assembly by installing the cover plate and fan pulley.

IGNITION TIMING

If a timing light is to be used to set ignition timing, disconnect the vacuum advance pipe to the carburetor and place a piece of tape over open end of pipe. *This is important as carburetor trouble can affect timing adjustments.*

Lacking a power timing light, an accurate method of setting ignition timing with the engine stopped is with the aid of a jumper light. Be sure to use a light bulb that corresponds with the system voltage of the vehicle.

1. Remove distributor cap and rotor and see that the breaker gap is set according to specifications.
2. Rotate engine until No. 1 cylinder is at the ignition timing point as indicated by the timing pointer and timing mark being lined up with each other.
3. Connect the jumper light between distributor ignition terminal and ground.
4. Turn on ignition switch.
5. Loosen distributor and turn it in the direction of normal rotation until the points just close (light out). Then slowly turn distributor in the opposite direction just to the exact point that the light goes on. Tighten distributor in this position.

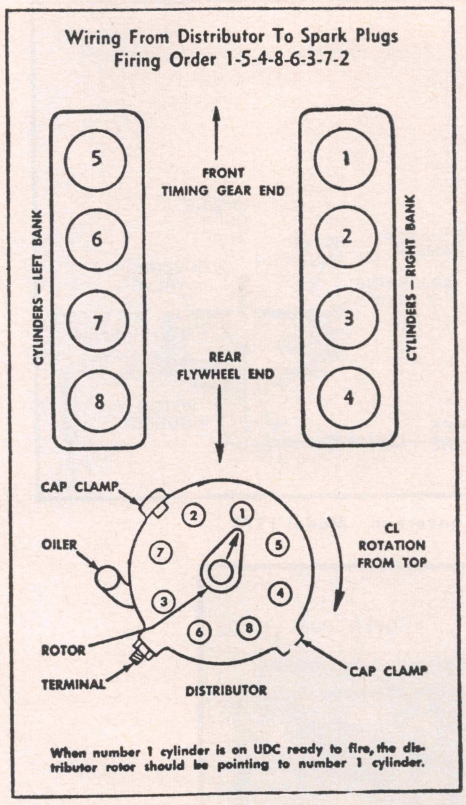

Fig. 14 Ignition wiring details. V8 engines

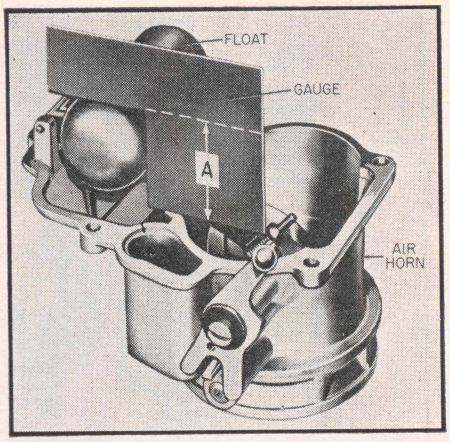

Fig. 16 Gauging float level. Holley carburetors

HOLLEY CARBURETORS

Models 847-FS & 852-FFG

These carburetors are dual downdraft units incorporating an integral governor, Fig. 15. The governor throttle mechanism is part of the carburetor and has been designed to provide the needed power required for moving the throttle to governing speeds as controlled by a separately driven governor rotor. The combination of these two units give instant response and accurate governing.

The carburetor and governor can be cleaned and serviced with ordinary tools and the governor rotor can be serviced independent of the carburetor. *Do not under any circumstances apply compressed air to an assembled carburetor as to do so may rupture the governor diaphragm.*

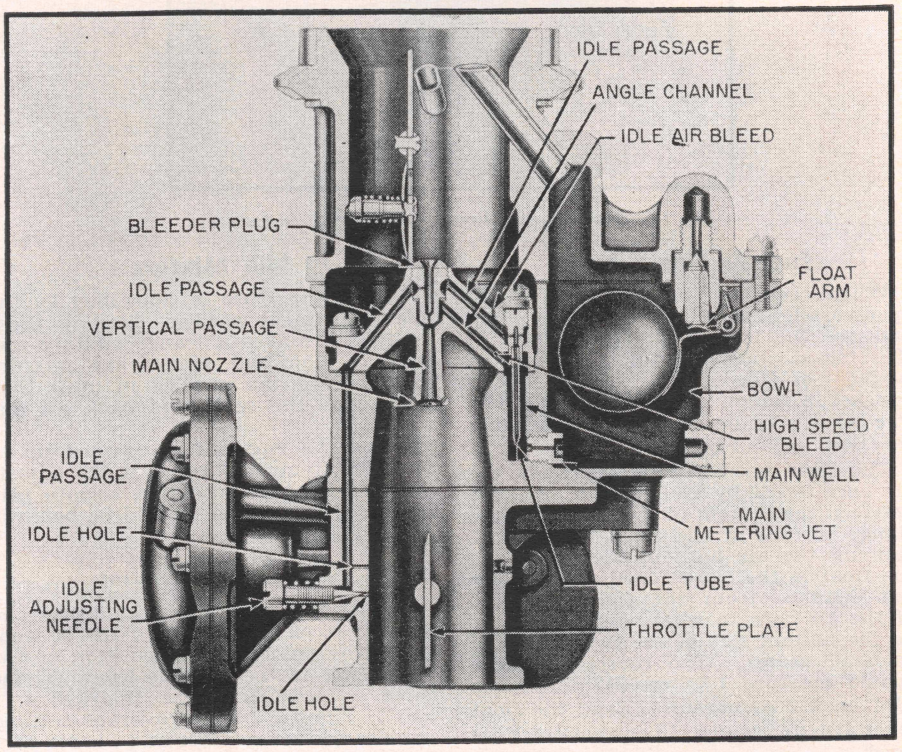

Fig. 15 Holley 847-FS carburetor. Typical of 852-FFG

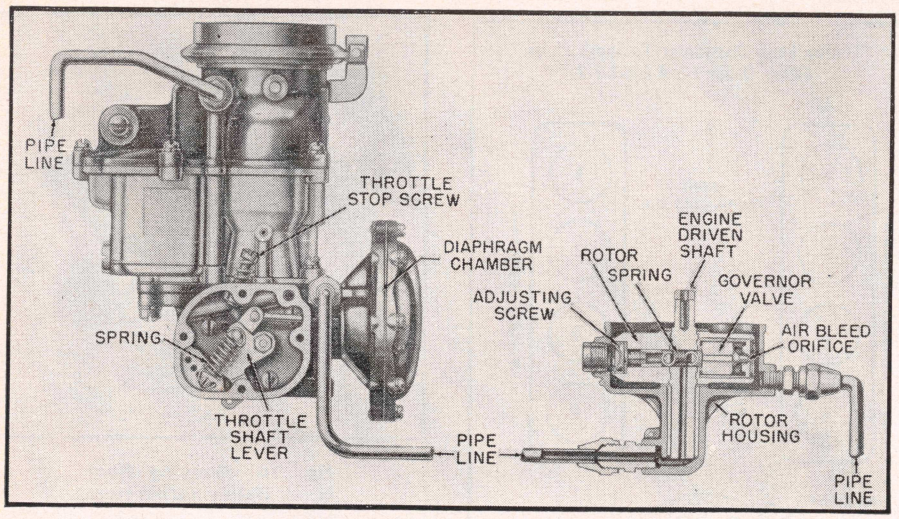

Fig. 18 Holley carburetor governor. Model 1174

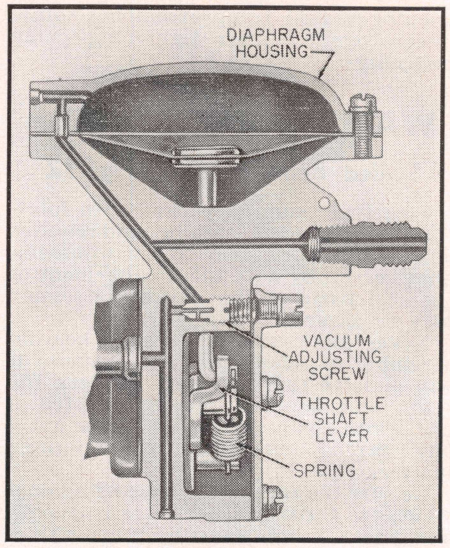

Fig. 19 Vacuum adjustment. Holley 1174 governor

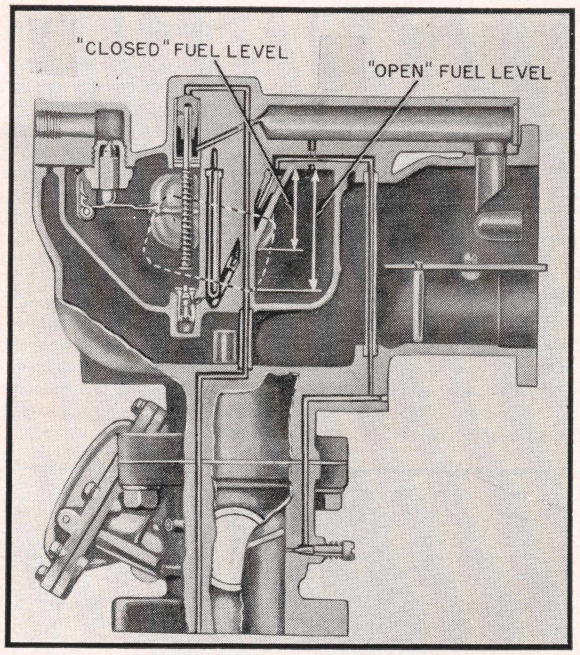

Fig. 17 Checking fuel level. Holley 885 carburetors

Fuel & Float Level

When checking the fuel level in an open vessel, under 4 lbs. (3 on 852) pump pressure the level should measure $\frac{11}{16}''$. The measurement is taken below the surface of the float chamber cover (gasket in place) to the level of the fuel. The level may be corrected by bending the float arm, Fig. 15.

The float level can be set when the air horn is off by gauging the distance between the bottom of the float and the flange surface of the air horn, Fig. 16. Holding the air horn upside down and the float in the closed position, measure the distance from the flange surface of the air horn to what would normally be the bottom side of the float (not the soldered seam). The correct distance should measure $1\frac{9}{32}''$ on 847 units and $1\frac{11}{32}''$ on 852 carburetors. Bend the float lever arm as required to correct the float level.

Idle Mixture

The idle mixture is controlled by the idle adjustment needles. Turning these needles in makes a leaner mixture and turning them out makes the mixture richer. Turn the needles in until they just touch the seats and back off one full turn.

When the engine has warmed up to operating temperature, alter the adjustment as required to obtain smooth performance. The range should be between 1 and 1½ turns.

Accelerating Pump

The quantity of the fuel discharged by the accelerating pump can be controlled by changing the position of the pump link in the throttle lever. Of the three different positions (marked 1, 2 and 3) number 2 is the average setting, number 1 is for summer and 3 is for winter operation.

Models 885-JJG & 885-JJSG

These units are dual concentric carburetors with all metering jets and passages grouped together and located in the center of the float bowl. The float bowl is a separate unit, being suspended inside the main body from the main body cover. With this design the fuel is kept cool by circulation of the main air supply around and under the float bowl.

Fuel & Float Level

When checking the fuel level in an open vessel, under 5 lbs. pressure the fuel level should be $\frac{19}{32}''$ on 885-JJSG and $\frac{5}{8}''$ on 885-JJG. Measurement is taken from the float chamber cover with gasket in place to the level of the fuel in the bowl.

The float level can be set accurately by gauging the distance between the bottom of the floats and the chamber cover surface. When setting the float level, it is important that both the "Open" and "Closed" position of the floats be checked, Fig. 17.

To gauge the "Closed" position of the floats, hold the float chamber cover upside down. Then measure the distance from the float chamber gasket to what would normally be the bottom side of the free end of the floats. The distance should be $1\frac{5}{16}''$ on both models. Measurement is taken with fuel inlet valve in the closed position and the float chamber cover gasket in place. To correct the float setting for this position, the float lever arms should be bent up or down to bring the floats within the established limits and thus correct the fuel level for best operation. Pushing the floats up or toward the float cover, raises the fuel level, and down or away from the cover lowers the level.

The "Open" position is gauged by raising the floats up until the float stop arm comes to rest against the inlet needle housing. Then measure the float setting in the same manner as for the "Closed" position. The distance should measure $1\frac{15}{16}''$ on 885-JJSG (1¼″ on 885-JJG) with the gasket in place and the float in

the position illustrated in Fig. 17. Corrections for this setting can be made by bending the stop arm on the float lever.

Idle Mixture Setting

The idle needle valve setting from the closed position is from ¾ to 1¼ turns open. Care should be taken not to jam the needles against the seat tight enough to groove the points. If this occurs, the needles will have to be replaced before a satisfactory adjustment can be made.

When the engine has been warmed up, turn one idle needle in until the engine starts to slow down, then turn it out until it again slows down. A point midway between these two will be very close to the correct idle mixture. Repeat this procedure for the other needle. When this is done, cross check by repeating both of the above procedures. The idle speed should be reset, if necessary, between the above operations.

CARBURETOR GOVERNOR

Holley Model 1174, Fig. 18

Used with Holley carburetors, this governor is a vacuum controlled device featuring all the advantages of a mechanical governor without lengthy and complicated linkage. Should it become necessary to make any changes, proceed as follows:

To adjust the governor cut-off speed, remove the seal from the screw on the side of the governor housing and remove the screw. Rotate the engine until the end of the governor rotor, which carries the adjusting screw, is in line with the hole from which the screw was removed. Turn the adjusting screw clockwise to increase or counter-clockwise to decrease governed speed.

Whenever the governor has been disassembled and serviced, after reassembling turn the adjusting screw clockwise until it stops, then turn it counter-clockwise three full turns. Final adjustment is then made after the governor has been assembled to the engine.

The vacuum adjusting screw, Fig. 19, regulates the rpm spread between the governor full load cut-off speed and the no-load engine speed. Turning the screw clockwise will decrease the rpm spread. Turning it counter-clockwise will increase the spread. Changing the position of the screw will change the average governor speed and this should be corrected by the rotor adjusting screw.

Clutch, Transmission & Rear Axles

LONG CLUTCHES

CF Type

This type clutch employs centrifugal force to increase the pressure against the pressure plate and clutch plate at higher speeds, in addition to using conventional spring pressure. The release levers are provided with small centrifugal weights which are integral parts of the levers. As the clutch rotates at high speeds, these heavy ends of the levers tend to move outward and exert additional pressure against the pressure plate.

Clutch Control, Adjust

Unless the clutch control linkage is removed, the only adjustment is the length of the clutch release rod.

This rod adjustment is made to obtain proper clearance and thus compensate for normal lining wear. With the foot pedal in its normal raised position, the length of the rod is adjusted to obtain a minimum of $\frac{1}{16}$" free movement between the working face of the clutch throwout bearing and the clutch release levers. This will represent a free movement of the clutch pedal of about 1½". Lengthen or shorten the rod to maintain free play at the pedal to insure $\frac{1}{16}$" clearance at the throwout bearing.

Clutch, Replace

When removing the clutch assembly, after removing the transmission, care should be taken to back out the six attaching screws about three turns at a time successively. This will prevent the clutch cover from being distorted by permitting the tension of the clutch pressure springs to be held by two or three screws.

Do not permit the weight of the transmission to hang on the driven disc for if it is bent it will necessitate excessive pedal travel to release the clutch.

Upon installing, always use a pilot shaft through the driven disc. When assembling the clutch to the flywheel, turn all attaching screws in finger tight. Then tighten with a wrench each screw not over two turns at a time. Go from one side of the clutch to the other until all attaching screws are tightened securely.

Clutch Service

The three release levers are properly set in a parallel plane and permanently locked at assembly. They will require no further attention during the life of the clutch, and they cannot be serviced. The pressure springs are set on asbestos base insulator washers where they rest on the pressure plate.

Long 13", 14" & 15" Models

This type clutch is a dry disc type in which pressure is exerted against the pressure plate by a series of coil springs. This pressure is augmented by six specially weighted clutch release levers.

Each of these levers, made of forged steel and mounted on needle roller bearings, is weighted at the outer end in such a way that the faster the clutch revolves the more pressure is exerted against the clutch plate. Thus the centrifugal force action supplements the normal spring pressure against the clutch plate, thereby increasing the torque transmitting ability of the clutch.

With this clutch, no internal adjustments are necessary to compensate for wear.

Clutch Service

Unless special clutch rebuilding equipment is available, it is recommended that the clutch assembly be exchanged for a rebuilt unit should the clutch require rebuilding. The driven disc, however, may be replaced as follows:

1. Remove transmission and bell housing.
2. Using six ⅜-16 x 1¼" capscrews, screw them into the cover plate in the holes provided until the screw heads just bottom to hold the springs compressed.
3. Unfasten the cover plate from the flywheel.
4. Remove the driven disc.
5. Place the new disc on the flywheel with the short hub toward the flywheel.
6. Install the clutch assembly.
7. Push an aligning shaft (a spare transmission shaft will do) through the clutch hub and pilot bearing.
8. Tighten the cover-to-flywheel screws down evenly and securely, giving each a few turns at a time until all are seated.
9. Remove the aligning shaft and the six screws used to keep the springs compressed when clutch was removed.
10. Before attaching the transmission to the engine, check the release levers and bearing for clearance. Use care to see that the flexible oil tube does not rub against the cover plate.

Clutch Pedal, Adjust

Clearance between the clutch release bearing and clutch levers is made by loosening the lock nut and turning the adjusting bolt as required to provide 1¼" to 1½" free pedal travel.

Adjustment of the release levers in the clutch assembly should never be attempted unless the assembly is removed and placed on a clutch rebuilder.

TRANSMISSIONS

Transmission Identification

White model number stamped on plate attached to left-hand cab door. For service procedures and lubricant capacities on Clark, Fuller, Spicer and Warner transmissions, see the "name" chapters

Main Transmissions

White Model	Mfgs Model
400B	Warner T9A
418B	Clark 233F
421B	Fuller 5-A-650
423B	Spicer 8041
424B	Clark 185F
426B	Warner T98
427B	Clark 332F
501B	Clark 270V
502B	Clark 205V
506B	Fuller 5-A-65
507B	Clark 290V
510B	Fuller 5-C-72
512B	Spicer 4652
514B	Clark 300V
515B	Fuller 5-A-62
516B	Fuller 5-A-65
517B	Fuller 5-A-65
520B	Clark 295V
521B	Fuller 5-A-65
522B	Clark 290V
524B	Fuller 5-A-43
527B	Fuller 5-AH-65
531B	Fuller 5-AH-65
537B	Fuller 5-CW-65
541B	Fuller 5-CW-65
551B	Clark 270VO
552B	Clark 205VO
556B	Fuller 5-A-650
557B	Clark 290VO
558B	Spicer 8251
559B	Spicer 8051
560B	Fuller 5-C-720
561B	Spicer 6453A
562B	Spicer 4753
565B	Fuller 5-A-620
566B	Spicer 6455
574B	Fuller 5-A-430
581B	Fuller 5-AH-650
591B	Fuller 5-CW-650
800B	Fuller R-45-C
801B	Fuller R-46
802B	Fuller R-46-S
900B	Clark 610ED
1003B	Clark 303X
1004B	Clark 403X
1006B	Fuller 10-XB-65
1007B	Fuller R-95-C
1026B	Fuller R-63
1027B	Fuller R-96
1037B	Fuller R-96-S
1050B	Fuller 10-B-1120
1056B	Fuller 10-FB-650
1057B	Fuller R-950-C
1076B	Fuller R-630-D
1077B	Fuller R-960

Auxiliary Transmissions

10H	Spicer 6231
13H	Spicer 8031
15H	Fuller 2-A-62
18H	Fuller 2-A-92
19H	Spicer 6041
20H	Spicer 7231
21H	Spicer 8341A

REAR AXLES

See "name" chapters for service procedures and lubricant capacities on Eaton and Timken axles

White Model	Mfg's Name	Mfg's Model	Axle Type
116C	Timken	E-100	S.R.
135C	Timken	R-101	S.R.
136C	Timken	H-140	S.R.
138C	Timken	L-140	S.R.
208C	Timken	L-200	D.R.
232C	Timken	R-200	D.R.
235C	Timken	R-201	D.R.
328C	Eaton	19500	2 Sp.
329C	Eaton	18800	2 Sp.
333C	Timken	QT—	2 Sp.
333TC	Timken	RT—	2 Sp.
335C	Timken	R-301	2 Sp.
336C	Timken		2 Sp.
338C	Timken		2 Sp.
389	Timken	QT—	2 Sp.
389TC	Timken	RT—	2 Sp.
400C	Eaton	36M	T.S.R.
406C	Timken	SLD	T.D.R.
	Timken	SLDD	T.D.R.
	Timken	SLHD	T.S.R.
	Timken	SQD	T.D.R.
	Timken	SQDD	T.D.R.
	Timken	SQW	W.D.T.

S.R.—Single reduction.
D.R.—Double reduction.
2 Sp.—Two speed.
T.D.R.—Tandem double reduction.
T.S.R.—Tandem single reduction.
W.D.T.—Worm drive tandem.

Steering Gear Section

ROSS CAM & LEVER

These gears, Figs. 1 and 2, are the cam and lever type in which the cam is mounted on ball bearings and the lever shaft turns on steel backed bronze bushings.

As the cam is turned by the wheel tube, the follower studs are pulled along the cam groove causing the lever arm to rotate the lever shaft. As an aid to easy steering the lever shaft studs which engage the cam are mounted on tapered roller bearings. The groove in the cam is cut shallower in the straight-ahead driving position to provide closer adjustment between the studs and the cam where most of the steering action occurs.

Cam End Play, Adjust

1. Free the steering gear of all load by disconnecting the drag link and loosening the steering column braces.
2. Loosen the lock nut and adjusting screw in the side cover to free the studs in the cam groove.
3. Remove the upper cover stud nuts and raise the housing upper cover to permit removal of the adjusting shims, which are .002", .003" and .010" thickness.
4. Clip and remove one thin shim, tighten down the cover and check the adjustment. There should be a slight drag but the steering wheel should turn freely with the thumb and forefinger lightly gripping the rim. If necessary, remove or replace shims until the adjustment is correct.

Lever Shaft Backlash, Adjust

1. Centralize the steering gear by turning the wheel all the way to the right. Then starting from this point count the number of turns required to reach end of travel to the left. Turn the wheel back half this number of turns to the mid-position.
2. Tighten the side cover adjusting screw until a very slight drag is felt through the mid-position when turning the steering wheel slowly from one side to the other. The gear should not bind in any position but

a slight drag should be felt in the mid-position only.

3. After proper adjustment is secured, tighten lock nut and give the gear a final check for binding.

Stud Roller Bearing, Adjust

In most cases the foregoing adjustments will be adequate but it is sometimes necessary to adjust the stud roller bearing units as they should be preloaded at all times. A heavy drag should be felt when revolving the studs by hand. If a torque wrench is available the bearings should be adjusted so that the torque required to revolve the stud is as follows:

Lever Shaft Dia.	Torque, In. lb.
1 3/8"	3-4
1 1/2"	3-4
1 5/8"	4-8
1 3/4"	5-11

1. To adjust, remove lever shaft from housing, wash the bearings in solvent and blow dry with compressed air, using care not to spin the bearings. Lubricate the bearings with light oil.
2. Straighten out the prong of the locking washer to release the stud nut. Remove the nut and install a new locking washer.
3. While holding the stud nut from turning with a spanner wrench on the locking washer, tighten the nut as required to revolve the stud in accordance with the table above.
4. When proper adjustment has been secured, bend the prong of the washer against a side of the nut to keep it from turning.
5. Lubricate the bearings with gear oil and assemble the lever shaft in the steering gear housing.

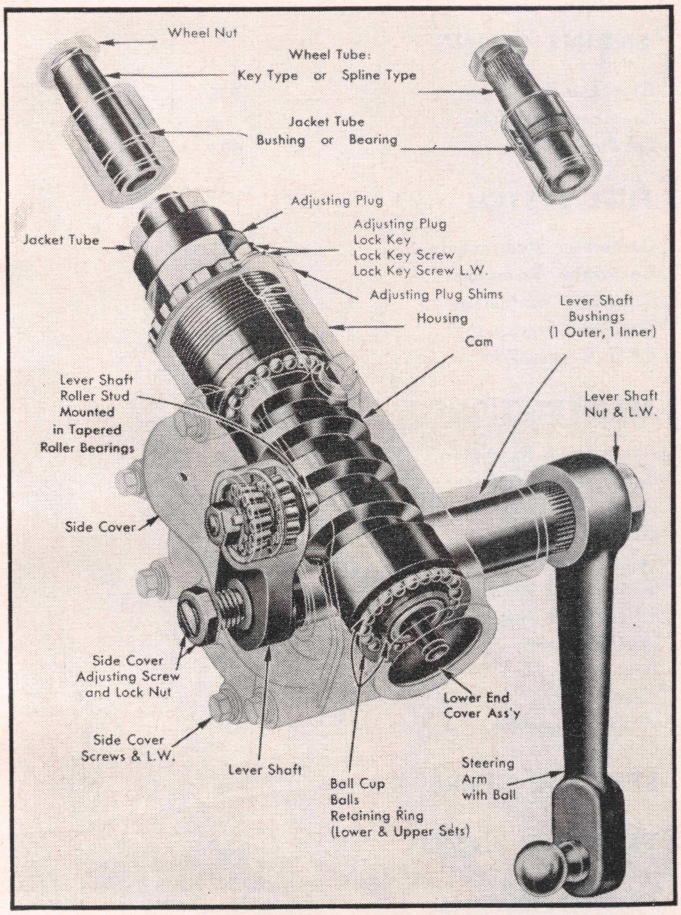

Fig. 1 Ross cam and lever steering gear with single roller bearing mounted stud

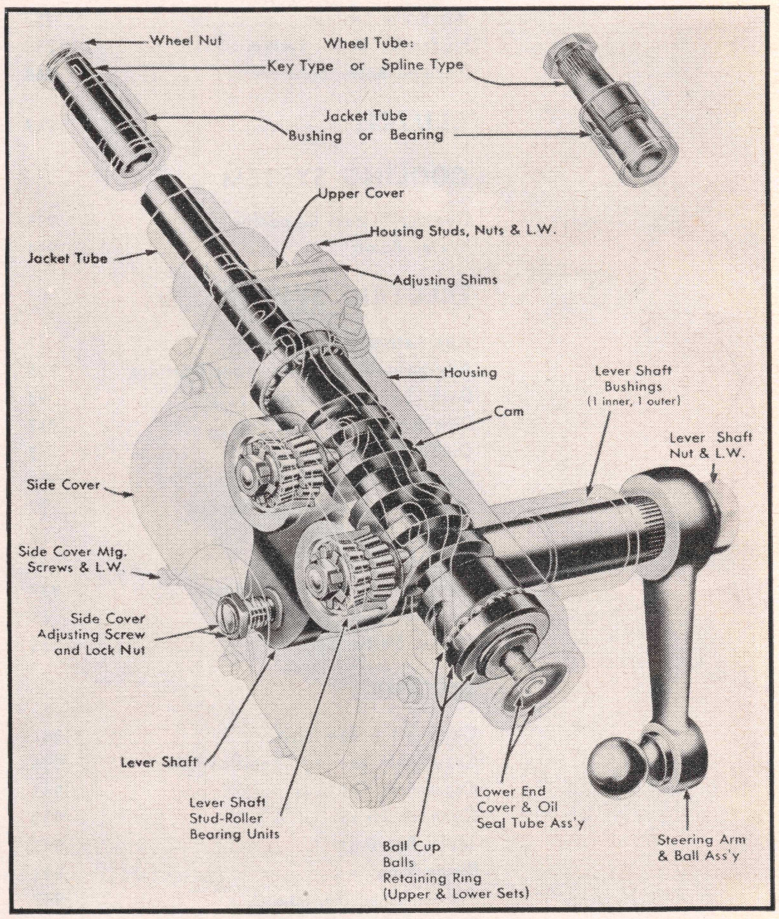

Fig. 2 Ross cam and lever steering gear with twin roller bearing mounted studs

WHITE PDQ TRUCKS

INDEX OF SERVICE OPERATIONS

PAGE NO.

AXLES, DRIVING

Eaton Axle Service 176
Locking Differentials 169
Timken Axle Service 209
White Axles 947

BRAKES

Adjustments 252
Air Brake System 259
Hydraulic Brake System 250
Vacuum Brake Boosters 268

CLUTCH 947

COOLING SYSTEM

Cooling System Capacity 935
Water Pump 944

ELECTRIC SYSTEM

Alternators & Regulators 37
Alternator & Regulator Specifications 936
Dash Gauge Service 93
Distributor Specifications 937
Distributor Service 7
Generator Specifications 936
Generator & Regulator Service 27
Ignition, Transistorized 22
Ignition Timing 945
Starting Motor Specifications 937
Starting Motor Service 65
Starter Switch Service 85

ENGINE

Camshaft & Bearings 941
Crankshaft Bearing Specifications 936
Crankshaft Oil Seal 943
Cylinder Head 937
Main Bearings 943
Piston Pins 942
Piston Rings, Replace 942
Piston & Ring Specifications 936
Pistons & Rods, Remove 941
Piston & Rod, Assemble 942
Pistons, Replace 942
Push Rods 940
Rocker Arms 938
Rod Bearings 942
Timing Chain 941
Timing Gears 940
Valves, Adjust 938

PAGE NO.

Valves, Grind 940
Valve Guides 939
Valve Lifters 940
Valve Rotators 938
Valves, Remove 939
Valve Seat Inserts 940
Valve Spring Installed Height 939
Valve Spring Testing 939
Valve Specifications 935

ENGINE OILING

Crankcase Capacity 935
Crankcase Ventilation 6
Oil Pump 943

FUEL SYSTEM

Carburetor Adjustments 945
Carburetor Governors 946
Crankcase Ventilation 6
Fuel Pump Service 104
L.P.G. Carburetion 109

SPECIFICATIONS

Alternator & Regulator 936
Carburetor Adjustment 945
Crankshaft & Bearing 936
Distributor 937
Engine Tightening Torque 936
Generator & Regulator 936
Piston, Pin & Ring 936
Starting Motor 937
Tune Up 935
Valve 935
Wheel Alignment 937

STEERING GEARS 948

TRANSFER CASES 242

TRANSMISSIONS

Clark 110
Fuller 122
New Process 135
Spicer 141
Warner 164
White 947
Powermatic 281

TUNE UP SERVICE 2

CHASSIS NUMBERS—The chassis serial, major unit and model numbers are stamped on an identification plate attached to the right inside wall of driver's compartment.

ENGINE NUMBER—The 90AA and 91AA engines have serial number stamped on plate on left side of engine block; on 96A and 97A stamped on plate at top center of flywheel housing; on 98A stamped on plate at rear of left bank of engine block.

MODEL INDEX & ENGINE APPLICATION

Truck Model	Year	Engine Make	Std. Engine Model		Oil Pan Refill Qts.④	Cooling System Qts ③
			Mfg's Model	White Symbol		
A7①	1961–63	Chrysler	6-170	96A	5	14
A8①	1961–63	Chrysler	6-170	96A	5	14
B8①	1961–63	Chrysler	6-170	96A	5	14
B10①	1961–63	Chrysler	6-225	97A	5	15
B12	1960	Cont ②	G4-193	90AA	4	13
C10	1961–63	Chrysler	6-225	97A	5	15
C10	1961–63	Chrysler	V8-318	98A	5	21
C10	1960	Cont ②	G4-193	90AA	4	13
C10	1960	Cont ②	FO-6226	91AA	5	15
C12	1961–63	Chrysler	6-225	97A	5	15
C12	1961–63	Chrysler	V8-318	98A	5	21
C12	1960	Cont ②	G4-193	90AA	4	13
C12	1960	Cont ②	FO-6226	91AA	5	15
C15	1961–63	Chrysler	6-225	97A	5	15
C15	1961–63	Chrysler	V8-318	98A	5	21
C15	1960	Cont ②	FO-6226	91AA	5	15
D8	1961–63	Chrysler	6-225	97A	5	15
D8	1961–63	Chrysler	V8-318	98A	5	21
D10	1961–63	Chrysler	6-225	97A	5	15
D10	1961–63	Chrysler	V8-318	98A	5	21
M8	1961–63	Chrysler	6-225	97A	5	15
M8	1961–63	Chrysler	V8-318	98A	5	21
M8	1960	Cont ②	G4-193	90AA	4	13
M8	1960	Cont ②	FO-6226	91AA	5	15
M10	1961–63	Chrysler	6-225	97A	5	15
M10	1961–63	Chrysler	V8-318	98A	5	21

①—1960 model uses Willys 4 cylinder engine. See Willys Chapter for service.
②—Continental engine.
③—Add one quart if equipped with heater.
④—Add one quart if oil filter is changed.

GENERAL SPECIFICATIONS

Year	Engine Model	White Engine Symbol	Bore & Stroke	Piston Displ. Cu. In.	Comp. Ratio (Std.)	Brake H. P. @ R.P.M.	Torque Lbs. Ft. @ R.P.M.	Governed Speed No Load R.P.M.	Normal Oil Pressure P.S.I.
1960–63	Continental G4-193	90AA	3¾ x 4⅜	193	7.00	77 @ 3200	172 @ 1700	3500	30
1960–63	Continental FO-6226	91AA	3 5/16 x 4⅜	226	8.00	110 @ 3200	192 @ 1800	3800	35
1961–63	Chrysler 6-170	96A	3 13/32 x 3⅛	170	8.60	101 @ 4000	145 @ 1600	3800	40–65
1961–63	Chrysler 6-225	97A	3 13/32 x 4⅛	225	8.20	140 @ 3900	215 @ 1600	3800	40–65
1961–63	Chrysler V8-318	98A	3.91 x 3 5/16	318	8.25	200 @ 3900	286 @ 2400	3900	40–50

TUNE UP AND VALVE SPECIFICATIONS

Year	White Engine Symbol	Firing Order	Spark Plug		Ignition Timing		Valve Face Angle	Valve Lash		Valve Springs	
			Type	Gap	Mark	Location		Intake	Exhaust	Installed Height	Pressure @ Inch Lenght
1960-63	90AA	1-3-4-2	H18Y③	.035	3°	Flywheel	②	.014H	.014H	1.817	76 @ 1 13/16
1960-63	91AA	1-5-3-6-2-4	N8③	.035	5°	Damper	②	.017H	.023H	1.817	76 @ 1 13/16
1961-63	96A	1-5-3-6-2-4	AG4④	.035	5°	Damper	45	.010H	.020H	1 11/16	80 @ 1 11/16
1961-63	97A	1-5-3-6-2-4	AG4④	.035	5°	Damper	45	.010H	.020H	1 11/16	80 @ 1 11/16
1961-63	98A	18436572①	AT42④	.035	10°	Damper	45	.010H	.018H	1 11/16	165 @ 1 5/16

①—Cylinder numbering (front to rear): Left bank 1-3-5-7, right bank 2-4-6-8.
②—Intake 30°, exhaust 44°.
③—Champion. Normal service.
④—Autolite. Normal service.

ENGINE TIGHTENING SPECIFICATIONS★

★Torque specifications are for clean and lightly lubricated threads only. Dry or dirty threads produce increased friction which prevents accurate measurement of tightness.

Engine	Spark Plugs Ft. Lbs.	Cylinder Head Bolts Ft. Lbs.	Intake Manifold Ft. Lbs.	Exhaust Manifold Ft. Lbs.	Rocker Arm Shaft Bracket Ft. Lbs.	Rocker Arm Cover Ft. Lbs.	Connecting Rod Cap Bolts Ft. Lbs.	Main Bearing Cap Bolts Ft. Lbs.	Flywheel to Crankshaft Ft. Lbs.	Vibration Damper or Pulley Ft. Lbs.
90AA	30	③	35	35	...	...	75	100	40	...
91AA	30	70–75	35	35	...	...	40	110	40	115
96A	30	65	200①	10	30	40①	45	85	55	②
97A	30	65	200①	10	30	40①	45	85	55	②
98A	30	85	30	25	30	36①	45	85	60	135

①—Inch lbs.
②—Press fit.
③—3/8″ bolt 40 ft. lbs., 1/2″ bolt 100 ft. lbs.

PISTON, PIN, RING, CRANKSHAFT & BEARING SPECIFICATIONS

Engine Model	Wristpin Diameter	Piston Clearance, Inch	Ring End Gap, In. (Minimum)		Crank Pin Diameter, Inch	Rod Bearing Clearance, In.	Main Bearing Journal Diameter, In.	Main Bearing Clearance, Inch,	Thrust On Bearing No.	Shaft End Play
			Comp.	Oil						
90AA	1.1092	.0035	.010	.010	2.249–2.250	.0015–.0035	2.3740–2.3750	.0027–.005	Center	.004–.006
91AA	.8592	.0015	.010	.010	2.0619–2.0627	.0007–.0025	2.3744–2.3752	.0008–.0028	Rear	.002–.006
96A	.9008	.001	.010	.010	2.1865–2.1875	.0005–.0015	2.7495–2.7505	.0005–.0015	Center	.004–.008
97A	.9008	.001	.010	.010	2.1865–2.1875	.0005–.0015	2.7495–2.7505	.0005–.0015	Center	.004–.008
98A	.9842	.0015	.010	.010	2.124–2.125	.0005–.0025	2.4995–2.5005	.0005–.0015	Center	.002–.007

GENERATOR & REGULATOR SPECIFICATIONS

★To polarize generator, disconnect field lead from regulator and momentarily flash this wire to regulator battery terminal.

Generator						Regulator					
							Cutout Relay				
Generator Number	Ground Polarity	Rated Cap. Amps.	Gen. Field Ground Location★	Brush Spring Tension, Ounces	Field Current Amperes	Regulator Number	Voltage to Close Points	Armature Air Gap, Inch	Voltage Regulator Setting Volts	Current Regulator Setting Amperes	Current and Voltage Armature Air Gap, Inch
1105116	Neg.	35	External	28	2.73–3.00	1119604	12.4	.020	14.5	35	①

①—Voltage .067″, current .075″.

ALTERNATOR & REGULATOR SPECIFICATIONS

Unit Number	Ground Polarity	Field Coil Draw Amperes ②	Current Output			Operating Voltage			Voltage Regulator Point Gap	Regulator Armature Air Gap
			Engine R.P.M.	Amperes ③	Volts	Engine R.P.M.	Amperes	Voltage @ 118° ①		
2095060	Neg.	2.38–2.75	1250	35	14.6	1250	15	13.48–14.08	.015	.048–.053
2095661	Neg.	2.38–2.75	1250	30	14.6	1250	15	13.5–14.1	.015	.048–.053
2095663	Neg.	2.38–2.75	1250	34	14.6	1250	15	13.5–14.1	.015	.048–.053

①—For each 10° rise in temperature subtract .04 volt; for each 10° drop add .04 volt. Temperature is checked with a thermometer 2 inches from installed voltage regulator cover.
②—Current draw at 12 volts while turning rotor shaft by hand.
③—If output is low, starter or rectifier is shorted.

DISTRIBUTOR SPECIFICATIONS

Unit Part No. ①	Rotation ②	Dwell Angle, Degrees	Breaker Gap In.	Condenser Capacity, Mfds.	Breaker Arm Spring Tension, Oz.	Centrifugal Advance Deg. @ R.P.M. of Dist.		Vacuum Advance		
						Advance Starts	Full Advance	Inches of Vacuum to Start Plunger Movement	Inches of Vacuum for Full Plunger Travel	Maximum Vacuum Advance, Dist. Degrees
1110264	CC	35–37	.021	.20–.25	19–23	1 @ 200	16 @ 1200	9	4–6	16
1110265	CC	32–34	.021	.20–.25	19–23		13 @ 1400	4	4–6	14
1110276	CC	35–37	.021	.20–.25	19–23		13 @ 1050	8	4–6	16
1BR-4002A	C	39	.020	.25–.28	17–20	1 @ 440	8 @ 1550	5.3	16	10
1BP-4003R	C	27–32	.017	.25–.28	17–20	1 @ 450	9 @ 2000	7.1	12.4	14.5

①—Stamped on plate rivited to housing.

②—C-Clockwise; CC-Counter clockwise.

STARTING MOTOR SPECIFICATIONS

Unit Part No.	Rotation	Brush Spring Tension, Oz.	No Load Test			Torque Test		
			Amperes	Volts	R. P. M.	Amperes	Volts	Torque Lb. Ft.
1107884	C	35	49–76①	10.6①	6200–9400	270–310①	4.3	...
MDU-7013	C	32–48	50	11	5500 Min.	355	4	9

①—Includes solenoid.

WHEEL ALIGNMENT SPECIFICATIONS

Year	Model	Caster, Degrees	Camber, Degrees	Toe-in Inches	Toe-out on Turns, Degrees		Kingpin Inclination, Deg.
					Outer Wheel	Inner Wheel	
1960–63	All	+3½	+1	⅛	...	...	8°

Engine Section

CYLINDER HEAD

90AA, 91AA Engines

1. Remove all items which would interfere with the removal of the cylinder head.
2. Drain cooling system. Be sure to open drain cock in center of block beneath intake manifold. On 90AA engine, also open drain cock at bottom of water-tempered intake manifold.
3. Remove intake and exhaust manifolds.
4. Remove rocker arm cover (also push rod cover on 91AA).
5. Remove rocker arm shaft assembly.
6. Remove rocker arm cups (90AA) or valve caps (91AA) and identify for reassembly.
7. Grip push rods and snap them sideways out of lifter brackets. Identify push rods for replacement in original locations.
8. Unfasten and remove head.
9. Reverse the foregoing procedure to install the head and tighten down in the sequences shown in Figs. 1 and 2.

96A, 97A Engines

1. Remove all items which would inter-

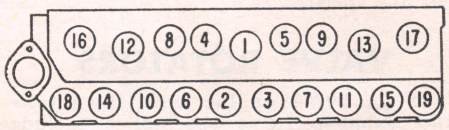

Fig. 2 Cylinder head tightening sequence. 91AA engine

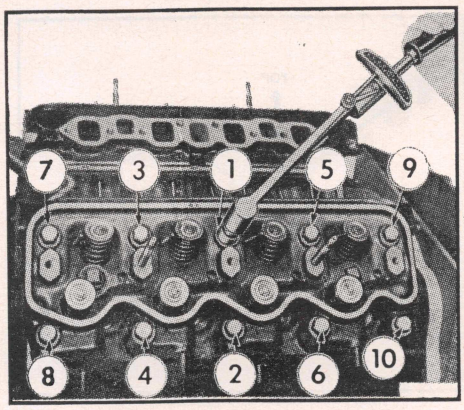

Fig. 1 Cylinder head tightening sequence. 90AA engine

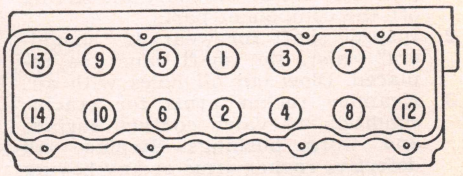

Fig. 3 Cylinder head tightening sequence. 96A, 97A engines

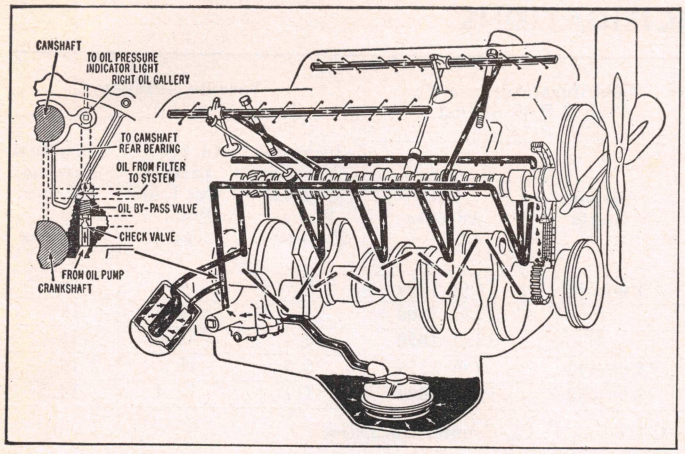

Lubrication diagram for 98A engines

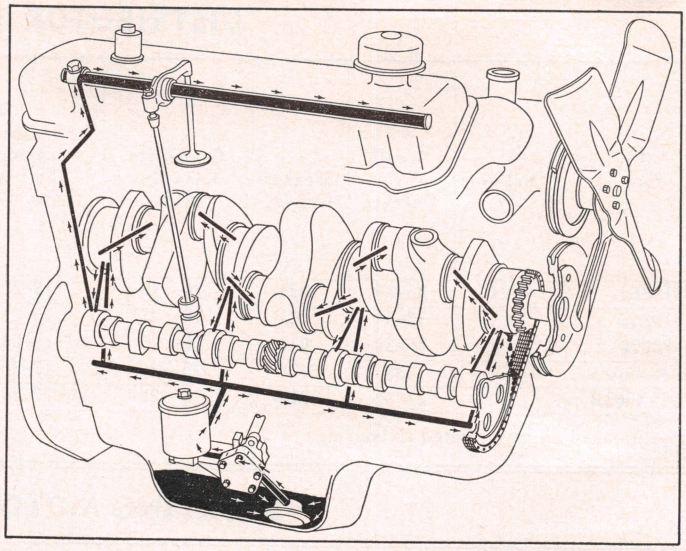

Lubrication diagram for 96A, 97A engines

fere with the removal of the cylinder head.

2. Drain cooling system. Be sure to remove drain plug located on right side of cylinder block toward the rear.
3. Remove intake and exhaust manifold with carburetor as an assembly.
4. Remove rocker arm cover.
5. Remove rocker arm shaft assembly.
6. Remove push rods and identify for replacement in original locations.
7. Unfasten and remove head.
8. Reverse foregoing procedure to install head and tighten down in the sequence shown in Fig. 3. *When installing intake and exhaust manifolds to cylinder head, loosen the three bolts holding the intake manifold to the exhaust manifold. This is required to maintain proper alignment.*

98A Engine

1. Drain cooling system.
2. Remove air cleaner.
3. Remove alternator.
4. Disconnect fuel lines and accelerator linkage at carburetor.
5. Disconnect water hose as required.
6. Remove intake manifold and carburetor as a unit.
7. Disconnect exhaust pipes at manifold flanges.
8. Remove ignition cables and rocker arm covers.
9. Unfasten and remove heads.
10. Reverse foregoing procedure to install the heads and tighten down in the sequence shown in Fig. 4.

ROCKER ARMS

90AA, 91AA Engines

1. Disassemble rocker arm shaft by removing the retaining pin or plug from one end of the shaft and sliding off the component parts.
2. Inspect shaft for wear. If "shoulders" exist, the shaft must be replaced. Blow out oil holes with air.
3. Examine rocker arms for cracks, condition of valve contact surface and worn bushings. Replace all defective rocker arms or any having over .005" clearance between shaft and arm.
4. Check rocker arm shaft supports for cracks or other damage.

96A, 97A Engines

1. Disassemble rocker arm shaft by removing bolts and retainers and sliding parts off.
2. Examine component parts for wear or damage as suggested for 90AA engines.
3. The rocker arms and shaft must be assembled as shown in Fig. 5.
4. Install the rocker shaft retainers between rocker arms so that they seat on rocker shaft and not on extended bushing of rocker arm.
5. When installing the assembly, it is imperative that the flat on the end of the rocker shaft be on top and pointing toward the front of the engine. *This is necessary to provide proper lubrication to rocker assemblies.*
6. The long rocker shaft bolt is installed in the bracket at the rear of the cylinder head.

98A Engines

1. If the rocker arm assemblies have been disassembled for cleaning, inspection or the installation of new parts, they should be assembled in the following manner.
2. Slide rocker shaft into bore of strut and at the same time engage intake rocker arm.
3. Install spring and engage exhaust rocker arm. Install remainder of rocker arms in same sequence.
4. Make sure that rocker shaft head bolt grooves line up with head bolt holes in rocker shaft strut. In addition, the plug hole in strut must also line up with hole in rocker shaft.
5. Tap in new rocker shaft plug.

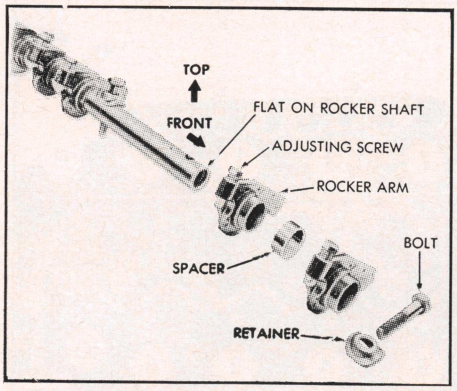

Fig. 5 Rocker arm shaft assembly. 96A, 97A engines

VALVES, ADJUST

It is imperative that valve lash be held as close as possible to the correct specifications. If lash is excessive, it will cause the valve to open too late and close too early, resulting in valve bounce; the camshaft would also be subject to damage. If lash is set too close, the valve will open too early and close too late, causing burning and warping of valves, and rough engine operation.

On 90AA and 91AA engines, valve lash adjustment is accomplished by turning the adjusting screw in the rocker arm after loosening the lock nut. On 96A, 97A engines, valve lash is adjusted by turning the adjusting nut in the rocker arm.

On 98A engines, the adjustment is made at the self-locking rocker arm adjusting screw. The screw should have a minimum of 3 foot-pounds torque as it is turned. If less than this, replace the adjusting screw and, if necessary, the rocker arm.

On all engines, the adjustment should be made while the engine is running at hot idle speed.

VALVE ROTATORS

In the 90AA engine, both the intake and exhaust valve assemblies include positive rotators which revolve each valve a definite amount each time it

opens. In the 91AA, 96A, 97A and 98A, each exhaust valve has a positive rotator of the same type.

Before an engine is disassembled for valve grinding or major repair work, the performance of the rotators should be checked as follows:

1. With engine in vehicle, remove rocker arm covers.
2. Observe valve rotation with engine running at moderate speed. The valves should rotate at uniform and constant speeds.
3. Rotators that do not appear to function properly should be replaced.

VALVES, REMOVE

1. With cylinder head removed, take off exhaust manifold and rocker arm assemblies.
2. Use a suitable spring compressor to compress the valve springs.
3. Remove valve locks.
4. Release and remove spring compressing tool.
5. Remove springs and spring retainers. If burrs exist in lock grooves, file them off before removing valves.
6. Remove valves and place them in a board or rack with numbered holes so that they can be identified as to the valve port from which they were removed.

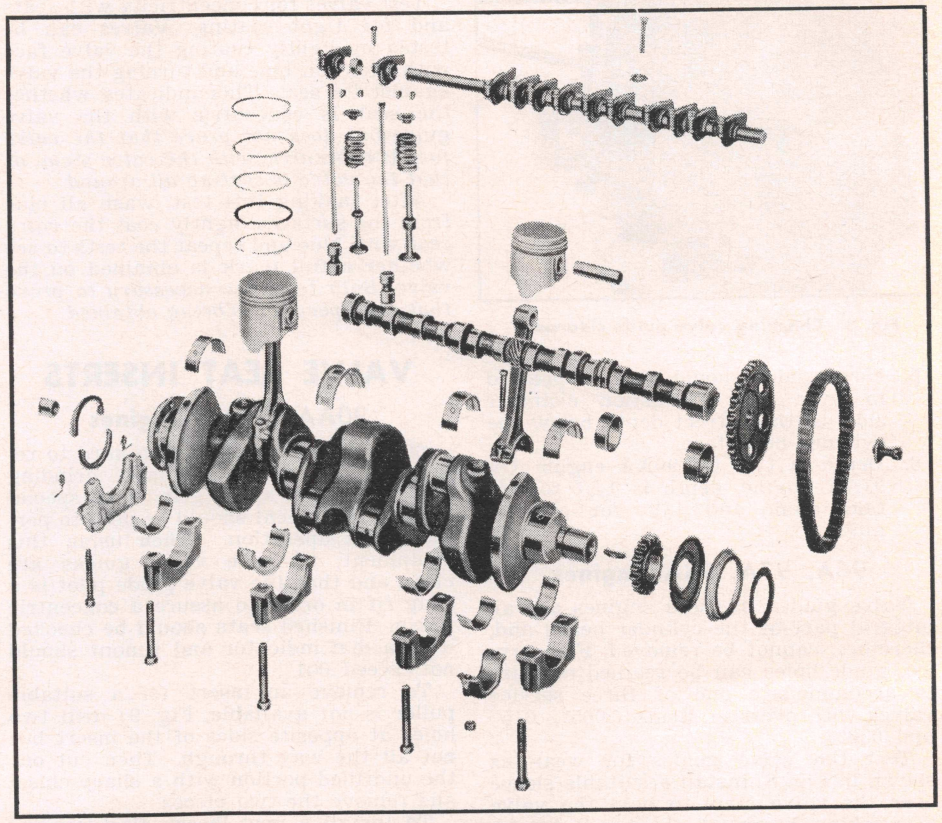

Internal parts for 96A, 97A engines

VALVE SPRING TESTING

Wash all springs with gasoline or other suitable solvent. Examine the springs for damage or corrosion due to acid etching, which will develop into surface cracks and cause spring failure.

Check the valve spring tension on a spring testing fixture, if one is available, Fig. 6, and according to the specifications given in the *Valve Data* chart. If a fixture is not available, at least check the free length of each spring by standing it alongside a new spring. Any spring that does not conform to the pressure specifications within 10% should be replaced. Likewise, any spring that stands shorter than the new spring used for comparison should be discarded. Of course, cocked springs should also be scrapped.

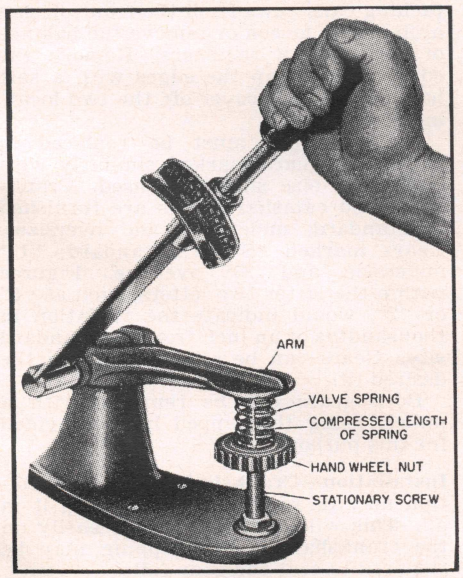

Fig. 6 Checking valve spring tension

VALVE SPRING INSTALLED HEIGHT

When valves and seats are reground the position of the valve in the head is changed so as to lessen the valve spring tension. Without proper valve spring tension the valve does not seat long enough or it may not seat completely. Since the valve is cooled by transferring heat from the valve head to the seat and thence to the coolant, improper valve spring tension will cause worn, pitted and distorted valves which result in loss of compression and power as well as poor gasoline mileage.

When valves, springs, retainers and locks are installed, measure the assembled height of the valve springs from the surface of the cylinder head spring pad to the underside of the spring retainer as shown in Fig. 7. If the assembled height is greater than the dimension given in the *Valve Specifications Chart*, install a spacer or shim of proper thickness between cylinder head spring pad and spring to bring the assembled height to specifications.

Do not install spacers unless necessary. Excessive use of spacers will result in overstressing valve springs and overloading camshaft lobes which could lead to spring breakage and worn camshaft lobes.

VALVE GUIDES

90AA, 91AA Engines

1. Clean the valve stem guides, removing lacquer or other deposits with a suitable guide cleaning brush.
2. Check guides for wear by using a "Go—NoGo" plug gauge, or a telescope gauge and a one inch micrometer.
3. Replace all valve guides that are worn over .3442" in diameter.
4. Remove guides, when necessary, by pressing them out from the combustion chamber side.

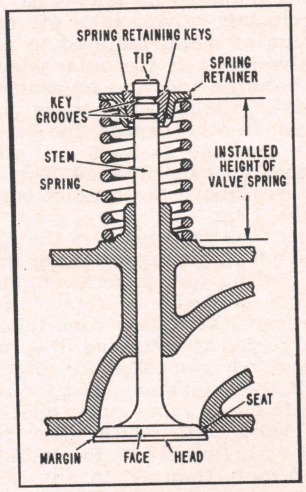

Fig. 7 Checking valve spring installed height

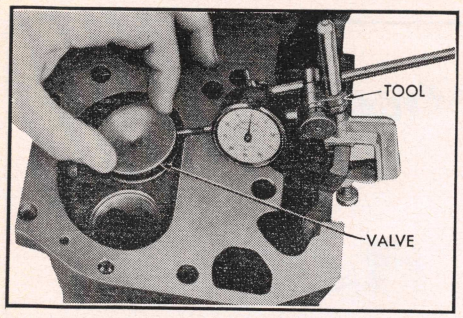

Fig. 8 Checking valve guide clearance

5. New guides should also be pressed in from the combustion chamber side, to the correct depth below the cylinder head face.
6. Depth is $1\frac{7}{16}''$ for 90AA engine. On 91AA engine, depth is $1\frac{3}{32}''$ for intake guide and $1\frac{11}{32}''$ for exhaust guide.

96A, 97A, 98A Engines

Valve guides in these engines are an integral part of the cylinder heads and, therefore, cannot be removed. For service, guide holes can be reamed oversize to accommodate one of three service valves with oversize stems (.005", .015" and .030").

Test the valve guides for wear as shown in Fig. 8. Install a suitable sleeve over the valve stem to hold the valve at working height in the head. Attach a dial indicator having valve stem at right angle with edge of valve. Move valve to and from indicator. Total movement should not exceed .012" on intake valves and .017" on exhaust valves. If tolerance is excessive, ream guide holes and install valves with overside stems. Always use a .005" reamer first, then (if necessary) a .015" reamer and finally a .030" reamer so the guides remain true in relation to the seat.

VALVES, GRIND

Clean the valves with a wire wheel brush, making sure that all carbon is removed from the top and bottom of the heads as well as the gum which might have accumulated on the stems.

If refacing valves, take off only the minimum of metal required to clean up the valve faces. If the outer edge of the valve becomes too thin or sharp due to excessive grinding, the valve must be replaced. In other words, the valve head margin must be at least $\frac{3}{64}''$, otherwise the valve must be replaced. This margin is the area above the contact surface of the valve face.

Inspect the valve seats in the block for cracks, burns, pitting, ridges or improper angle. During any general engine overhaul it is advisable to reface the valve seats regardless of their condition. If new valves guides are required, they must be installed and reamed before refacing the seats if the equipment used for refacing the seats has a valve guide pilot.

The valve seat width after refacing should be a liberal $\frac{1}{16}''$ for intake seats but not more than $\frac{3}{32}''$ in any case. The width of exhaust seats should be $\frac{3}{64}''$ to a liberal $\frac{1}{16}''$.

Test valves for concentricity with seats and for tight seating. Valves can be tested by lightly coating the valve face with prussion blue and turning the valve against its seat. This indicates whether the seat is concentric with the valve guide *but does not prove that the valve face is concentric with the valve stem, or that the valve is seating all around.*

After making this test, wash all blue from the surfaces, lightly coat the *valve seat* with blue and repeat the tests to see whether a full mark is obtained on the valve. *Both tests are necessary to prove that a proper seat is being obtained.*

VALVE SEAT INSERTS

90AA, 91AA Engines

Since these inserts are too hard to reface by the ordinary hand grinding method, a high speed grinder or special lapping equipment should be used to perform this operation. When using this equipment, be sure valve guides are clean and that the valve guide pilot is a snug fit in order to assure a concentric finish. Finished seats should be checked with a dial indicator and runout should not exceed .001".

To remove an insert (If a suitable puller is not available, Fig. 9) drill two holes at opposite sides of the insert but not all the way through. Then cut out the undrilled portion with a sharp chisel and remove the two pieces.

To install a new insert, first remove all burrs and sharp edges from the seat recess. Then chill the new insert with "dry ice" to obtain maximum contraction of the metal and place it in the recess. If necessary, the insert may be pounded in by using a round driver the same size as the insert and pounding on same with a hammer.

If a standard insert is too loose, secure an oversize one. Of course, the recess should be bored out to accommodate the oversize insert.

When installed, peen the block around the insert bore to insure the insert remains in place.

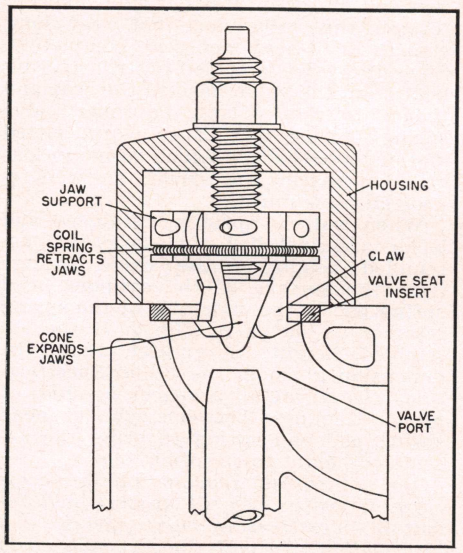

Fig. 9 Valve seat insert puller

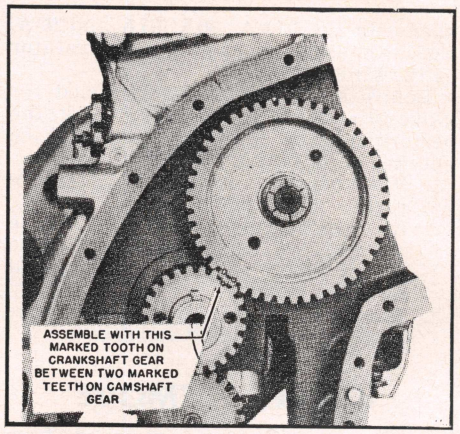

Fig. 10 Valve timing for 90AA engine

VALVE LIFTERS

The 90AA engine utilizes mushroom type valve lifters having a base larger than the bore in which they operate. This design makes it necessary to remove the camshaft in order to remove the lifters from below, if necessary.

On 91AA, 96A, 97A and 98A, barrel type lifters are used which are the same diameter throughout their length. When necessary, these lifters may be removed from above after removing the valve push rods.

PUSH RODS

Before installing push rods, inspect them for bends or twists, and examine the ball and cup ends for excessive wear. Any push rod that is defective should be replaced.

TIMING GEARS

90AA Engine

Before removing the timing case cover, it will be necessary to remove the attaching capscrews from the front oil pan arch and to loosen or remove the balance of the oil pan fasteners. Remove the cover screws, tap the edges with a soft hammer and lift cover off the two locating dowels.

Timing gears must be replaced in pairs, and gears marked similarly with respect to size should be used. Crankshaft and camshaft gears are furnished in standard, undersizes and oversizes. Gears marked "S" are standard; "U" undersize, and "O" oversize. Figures within the latter two letters, such as "1" or "2", would indicate the variation in thousandths of an inch from the standard size. Gears can be selected to give the desired fit.

Both gears can be removed with a puller, using the tapped holes provided for this purpose.

Installation—Crankshaft gear installation may be facilitated by heating it in oil. This will allow it to slide easily on the crankshaft. Light tapping may be required to seat the gear fully.

The camshaft gear may be tapped

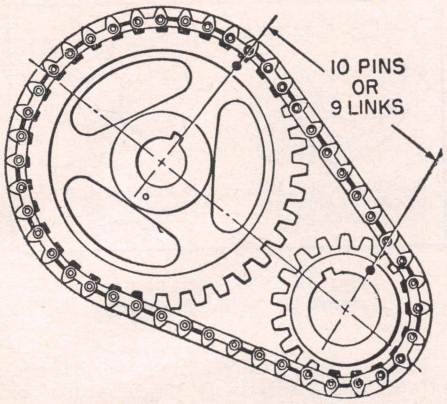

Fig. 11 Valve timing for 91AA engine

lightly into place. However, do not allow the camshaft to bump the expansion plug at the rear as this could cause an oil leak. Be certain that the timing marks on the gears are in mesh as shown in Fig. 10.

Check the gear backlash with the gears assembled in place. Pry the teeth as far apart as possible with a screwdriver and check with a feeler gauge. If a .0015″ feeler gauge will not enter the gap between the teeth, clearance is not excessive.

TIMING CHAIN

91AA Engine

1. To remove chain and sprockets, remove nut and locking plate on cam sprocket.
2. Pull chain sprockets from crankshaft and camshaft evenly. This can be done by the use of small pry bars, being careful not to damage sprockets or chain.
3. When replacing, be sure to have the chain properly lined up as shown in Fig. 11. Then slide sprockets and chain onto crankshaft and camshaft evenly. *Be sure to hold the camshaft forward by installing a pry bar in the fuel pump opening, as failure to do this may loosen the plug at the rear of the cylinder block, causing an oil leak.*

96A, 97A Engines

1. Before removing the chain cover, loosen the oil pan bolts to allow clearance.
2. Use a puller to remove pulley.
3. Unfasten and remove cover.
4. If oil seal in cover is damaged, install a new seal. After installing the seal, try to insert a .0015″ feeler between the seal and cover. If seal is properly installed, feeler gauge cannot be inserted.
5. Remove lock bolt and washer from cam sprocket. Then pull cam sprocket and chain forward evenly so that chain slides off crankshaft sprocket.
6. If crankshaft sprocket requires replacement, it can be removed by using a three-jaw puller. When installing the crankshaft sprocket, make certain that the timing is toward the front.
7. To replace the chain, be sure to have the timing marks properly aligned as shown in Fig. 12.

98A Engine

1. Insert a suitable tool into the ignition distributor hole between timing gear and block. Install retaining bolt. This will lock camshaft in position during installation of sprockets.
2. With sprockets fitted into chain according to marks as shown in Fig. 13, lift chain and sprockets, keeping sprockets tightly in position in chain.
3. Slide both sprockets evenly over their respective shafts. Push sprockets firmly over keyways and into position.
4. Place straightedge across face of sprockets and carefully check alignment of timing marks, Fig. 13. Marks should be exactly in line.
5. Slide fuel pump eccentric over camshaft and down against sprocket. Be sure slot in eccentric engages top of gear key. Install cup washer and bolt and tighten to 35 ft. lbs.
6. Slide crankshaft oil slinger over shaft and up against sprocket (flange away from sprocket).
7. Before installing the cover, drive the old seal out and install a new one.
8. Slide chain case cover over locating dowels and, using a soft hammer, tap cover in place.
9. Install bolts and washers after coating with a suitable sealer. Tighten bolts to 15 ft. lbs. Install the short bolt at the oil filler pipe location.

CAMSHAFT & BEARINGS

90AA, 91AA Engines

1. With timing case cover removed, bring No. 1 piston to top dead center.
2. Remove screws retaining camshaft thrust plate to block. This can be done only with the cam gear removed. If thrust plate indicates scoring or wear, replace without question.
3. In 90AA engines, the mushroom type valve lifters must be raised as high in their bores as possible in order to remove the camshaft. This can be done with wire or spring-type clothespins. The valve lifters can be removed, if required, from the bottom of the block after camshaft and oil pan are removed.

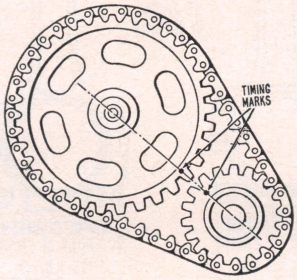

Fig. 12 Valve timing for 96A, 97A engines

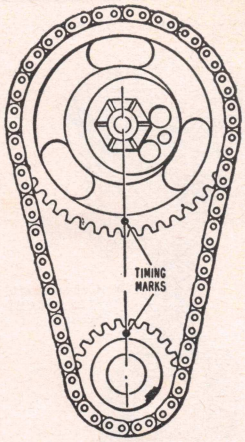

Fig. 13 Valve timing for 98A engine

4. On 91AA engines, the barrel type valve lifters are made accessible through the push rod chamber cover. Be sure to identify lifters for installation in proper location.
5. Remove fuel pump, allowing camshaft to be pulled from block.
6. If necessary to replace camshaft bushings, service bushings are available which require no reaming. Care should be exercised when installing new bushings to properly align oil holes.
7. Make certain No. 1 piston is on top dead center when reinstalling camshaft.

96A, 97A, 98A Engines

In order to remove the camshaft it is necessary to remove the fuel pump, distributor and oil pump in addition to the timing chain and sprocket. Also the valve lifters must be removed or raised so as not to interfere with removal.

If camshaft bushings are to be replaced, the engine must be removed from the vehicle. Service bushings are available which require no reaming. When installing bushings, make certain that bushing oil hole is in exact alignment with drilled oil passage from main bearing.

Install No. 1 camshaft bushing $\frac{3}{32}$″ inward from face of cylinder block on 96A and 97A engines.

PISTONS & RODS, REMOVE

After removing the cylinder head and oil pan, examine the cylinder bores above the ring travel area. If the bores are worn so that a shoulder or ridge exists at this point, remove the ridge with a ridge reamer to avoid damaging rings or cracking ring lands of pistons during removal.

Remove the connecting rod caps and push the pistons and rods out of the cylinders, using care to prevent rod bolts from nicking crankshaft journals. Make sure rods and pistons are properly numbered so they can be reinstalled in the proper cylinders. It is advisable to install caps on rods to avoid mixing parts.

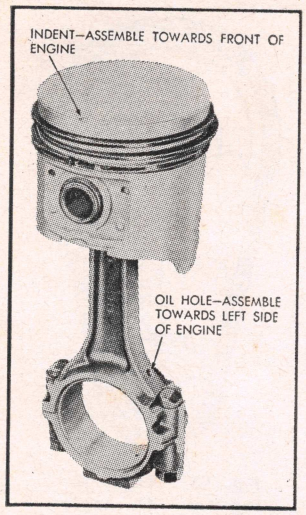

Fig. 14 Correct assembly of piston and rod. 96A, 97A engines

PISTONS & RODS, ASSEMBLE

90AA, 91AA Engines

If the pistons and rods have factory markings to indicate their position in the cylinders, assemble and install them according to these marks, or according to the marks made during removal if they were not otherwise marked.

96A, 97A Engines

Piston and rod assemblies must be installed with the notch on the piston head toward the front of the engine, and the oil hole in the connecting rod toward the manifold side of the engine, Fig. 14.

98A Engines

When installing piston and rod assemblies in the cylinders, the compression ring gaps should be diametrically opposite one another and not in line with the oil ring gap. The oil ring expander gap should be toward the outside of the "V" of the engine. The oil ring gap should be turned toward the inside of the engine "V".

Immerse the piston head and rings in clean engine oil and, with a suitable piston ring compressor, insert the piston and rod assembly into the bore. Tap the piston down into the bore, using the handle of a hammer.

Assemble and install the pistons and rods as shown in Fig. 15.

PISTONS, REPLACE

Before a honing or boring operation is started, measure all new pistons with a micrometer at points 90° away from the piston pin. Then select the smallest piston for the first fitting. The slight variation usually found between pistons in a set may provide for correction in case the first piston is fitted too free.

It is important that refinished cylinder bores are trued up to have not more than .0005″ out-of-round or taper. Each bore must be final honed to remove all stone or cutter marks and provide a smooth surface. During final honing, each piston must be fitted individually to the bore in which it will be installed and should be marked to insure correct installation.

After final honing and before the piston is checked for fit, each bore must be thoroughly washed to remove all traces of abrasive and then dried thoroughly. The dry bore should then be brushed clean with a power-driven fibre brush.

Both the piston and cylinder block must be at room temperature (70°) when the piston is checked for fit in the bore. Therefore, the cylinder should be allowed to cool after boring or honing and before the piston fit is checked. This is important because a difference of 10° between the temperature of parts is sufficient to produce a variation of .0005″.

PISTON RINGS, REPLACE

When new rings are to be installed without reboring cylinders, the glazed cylinder walls should be slightly dulled but without increasing the diameter of the bore. This is done with a "Glazebuster" or a hone equipped with the finest grade of stones.

New rings must be checked for clearance in piston grooves and for gap in cylinder bores. The latter operation must be measured with the ring about two inches from the bottom of the cylinder bore to which it is to be fitted. Cylinder bores and piston grooves must be clean, dry and free from carbon and burrs.

Check the clearance of each ring in its piston groove by installing the ring and then inserting feeler gauges *under* the ring. Any wear that occurs in the piston groove forms a step or ridge at the inner portion of the lower land. If gauges are inserted above the ring, the ring may rest on the step instead of on the worn portion of the lower land and a false measurement of clearance will result.

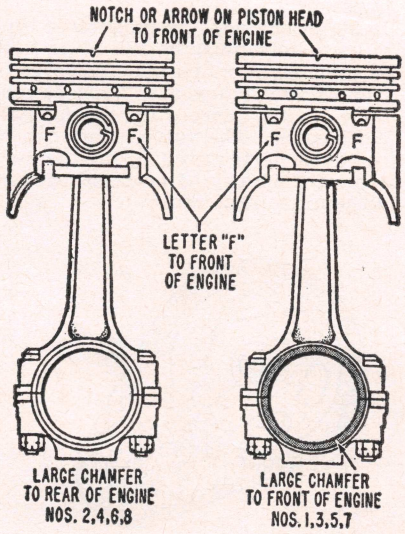

Fig. 15 Correct assembly of pistons and rods. 98A engine

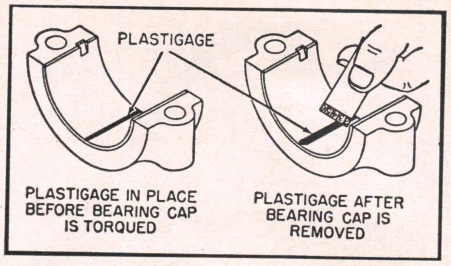

Fig. 16 Checking bearing clearance with Plastigage

If the piston grooves have worn to the extent that relatively high steps or ridges exist on the lower lands, the piston should be replaced because the steps will interfere with the operation of the new rings and ring clearances will be excessive. Piston rings are not furnished in oversize widths to compensate for ring groove wear.

PISTON PINS

90AA, 91AA Engines

If the bushing in the upper end of the connecting rod is worn and original pistons are to be re-used, an oversize piston pin may be used. These are available in .002″, .003″ and .005″ oversize.

Before installing the piston pin, the piston should be heated in some form of oven or in hot water to a minimum temperature of 160 degrees F. This will allow the pin to be thumb-pushed on through the rod and into place without distortion. The snap rings must be assembled in the grooves, making certain that they are fully seated.

96A, 97A Engines

Piston pins are a press fit in the connecting rod and a very light thumb push fit in the piston. Pins are furnished in standard size only. If excessive clearance is noted, both piston and pin should be replaced.

98A Engine

Piston pin fit in both the connecting rod and piston should be a thumb push fit with parts at normal room temperature.

Piston pins are supplied in standard and oversizes of .003″ and .008″. When using an expansion reamer to fit oversize piston pins, be careful and take a very light cut. Ream and try the fit; then ream and try again until pin can be pushed into piston or connecting rod as above.

ROD BEARINGS

Connecting rod bearings can be replaced without removing the piston and rod assemblies merely by taking off the rod cap and replacing the upper and lower bearing halves.

The clearance between the bearings and crankshaft can be measured with Plastigage as follows:

1. Remove bearing cap and wipe oil from crankshaft journal and bearing.

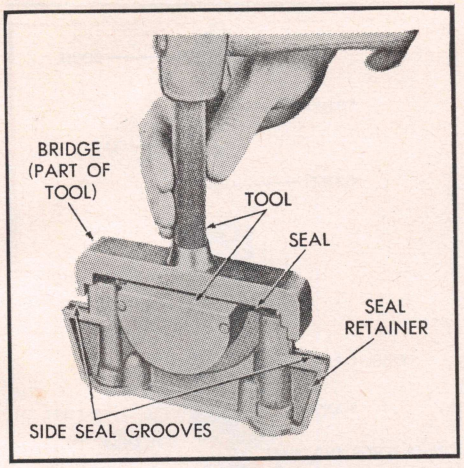

Fig. 17 Installing rear main bearing oil seal. 96A, 97A engines

2. With crankpin at approximately bottom dead center, place a piece of Plastigage in the center of the bearing, Fig. 16.
3. Reinstall the bearing cap and tighten the bolts to the torque value given in the *Engine Tightening* table.
4. Remove the bearing cap again and check the bearing clearance by measuring the width of the flattened Plastigage. The measuring strip is supplied in the same envelope which contains the Plastigage.

MAIN BEARINGS

Caution—Main bearing clearance can be checked with Plastigage in the same manner described for rod bearings. If bearings are measured with the engine in the chassis, the crankshaft must be supported in order to take up clearance between the upper bearing insert and crankshaft journal. This can be done by tightening bearing caps of adjacent bearings with .005" to .015" cardboard, (such as a calling card) between lower bearing shell and journal. Use extreme care when this is done to avoid unnecessary strain on the crankshaft or bearings or a false reading may be obtained. Do not rotate crankshaft while Plastigage is installed. *Be sure to remove cardboard.* To install new bearings, proceed as follows:

1. Remove bearing cap and worn lower shell.
2. Rotate crankshaft in normal direction to turn upper bearing shell out of crankcase. Use a cotter pin with a flattened head or the special tool made for the purpose in the crankshaft oil hole, to contact the bearing and force it out.
3. Place a new upper shell on the crankshaft journal with the locating notch in the correct position and rotate the shaft to turn the bearing in place.
4. Install the lower bearing shell in the cap.
5. Tighten all cap nuts to the torque value given in the *Engine Tightening* table.

CRANKSHAFT OIL SEAL

90AA Engine

The rear crankshaft oil seal is of the "spring" type which keeps the dust out and the oil in. This seal contacts the polished surface of the crankshaft flange, and is pressed into a seal retainer which bolts to the rear of the cylinder block. To replace worn seals, proceed as follows:

1. Remove capscrews attaching seal retainer to block.
2. Remove old seal with a seal driver which fits the seal.
3. Press in a new oil seal.
4. Examine the seal contact surface in the block carefully. Any scratches or other damage to this surface must be polished out before reassembly of the seal to prevent further damage and thus render it ineffective.
5. Mount oil seal and retainer to cylinder block.

91AA Engine

This engine uses the jute-packing type of rear seal. To replace this packing and reassemble the rear seal, proceed as follows:

1. Remove filler block and oil guard, the latter being the semi-circular die casting which fits in the cylinder block in a groove machined just to the rear of the main bearing.
2. Clean all surfaces and grooves thoroughly. If a scraper or wire brush is used, be careful not to scratch or gouge the sealing surfaces. All dried cement or other foreign material must be removed from these surfaces. Check filler block contact faces for flatness; if warped, replace block.
3. The jute packing, as received, has a diameter about ⅓ greater than the width of the grooves. This must be crushed in a vise, or otherwise flattened, narrow enough to be inserted in the grooves.
4. Press flattened packing in both filler block and oil guard as well as possible by hand. Then, using a piston pin, smooth hammer handle or other tool with a smooth rounded surface, iron this packing into the groove so that it is seated firmly and expanded to grip the sides.
5. With a sharp knife or razor blade, cut off the excess packing protruding from ends of the groove parallel to the surface of the casting, allowing it to protrude $\frac{1}{32}$".
6. To assemble to the engine, coat the outer or sealing surface of the oil guard with a non-hardening cement. Slide it into place around the crankshaft if engine is still assembled, or directly into the recess if the crankshaft is out. When the assembly is made as outlined, and the filler block assembled and tightened in place, and completed with a new oil pan gasket, there is no possibility of oil leakage developing at this point.

96A, 97A, 98A Engines

A braided oil seal is pressed into the upper and lower grooves behind the rear main bearing, Figs. 17, 18. Directly in front of this seal is an oil slinger which deflects the oil back into the oil pan. Should the braided seal require replacement, the installation of the lower half is accomplished as follows:

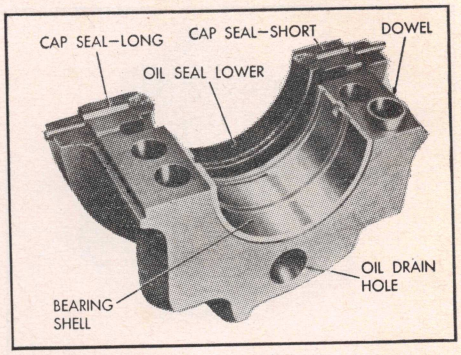

Fig. 18 Installing rear main bearing oil seal. 98A engine

With the bearing cap and lower bearing half removed, install a new seal so that both ends protrude above the cap. Tap the seal down into position or roll it snugly in its groove with a smooth rounded tool. Then cut off the protruding ends of the seal with a sharp knife or razor blade.

Although the usual practice is to remove the crankshaft when the upper half of the seal is to be replaced it is possible to do the job without removing the crankshaft as follows:

To remove the seal, use needle-nose pliers to grasp the end of the seal which is most accessible. Pull the seal downward while rotating the crankshaft slowly in the direction that the seal is being removed.

To install the new seal, fasten a length of wire or strong string such as fishing line securely to one end of the new seal. See that the point of fastening is not bulky and that it is not over ⅜" from the end of the seal. Coat the seal with Lubriplate. Pass the free end of the wire or string up over the crankshaft at the point where the seal is to be installed. Then exert a firm, steady pull on the wire or string and at the same time rotate the crankshaft slowly in the direction of the pull. This will help to move the seal into position. When the installation is completed, trim the ends of the seal flush with the engine block.

OIL PUMP

90AA Engine

This oil pump is assembled to the front main bearing cap, being held in place by the main bearing capscrews. The drive gear meshes with and is driven by the crankshaft gear (see Fig. 10). These gears have a specified .004-.008" drive or clearance fit which must be checked when reassembling the engine. Shims are available to increase the center distances of the oil pump and crankshaft gears to maintain this fit.

The pressure relief is located on the bottom of the pump body just below the drive gear. Pressure is controlled by a plunger and spring, and may be increased by assembling washers ahead of the cotter pin in the plunger bore.

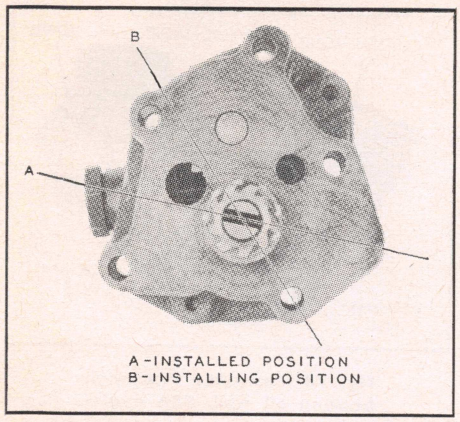

Fig. 19 Installing oil pump on 91AA engine

91AA Engine

This oil pump is externally mounted and driven off a gear on the camshaft. A gear assembled to the upper end of the oil pump shaft is driven by a mating gear cut on the camshaft. A by-pass type of relief is built into the pump so that surplus oil is recirculated.

The oil pressure relief is located externally on the right side of the pump. Pressure is controlled by a plunger and spring, the latter being specifically for a certain range. The only adjustment variation is either to change springs, or assemble or remove washers from behind the present spring. Up to four washers are permissible.

Installation—When installing the oil pump on this engine, the distributor should be removed. If the engine is completely disassembled, the oil pump should be installed only after the crankshaft, flywheel, camshaft and timing gears.

1. Turn engine over to No. 1 firing position. Be certain timing mark on flywheel coincides with pointer on flywheel housing.
2. Position oil pump distributor drive slot as shown in Fig. 19. Note that the slot is offset and that the narrow segment of the shaft is to the top.
3. Place gasket on pump body face, using a small amount of grease to retain it.
4. Insert pump shaft into bore, using care to avoid turning gear before it meshes with drive gear on camshaft. As this occurs, the slot in the shaft will appear nearly horizontal when viewed down the distributor shaft bore.
5. Assemble retaining screws.
6. Chalk-mark the No. 1 terminal position on the distributor body and install the distributor. The rotor should point to this mark when it is installed.

96A, 97A Engines

This oil pump, Fig. 20, is of the rotor type, externally mounted and driven by the camshaft. Remove and repair the pump as follows:

1. Unfasten and remove pump from engine.
2. Press off drive gear, exercising caution to support gear in order to keep load off aluminum body. Remove pump rotor and shaft and lift out outer rotor.
3. Check flatness of cover by laying a straightedge across cover surface. If a .0015″ feeler gauge can be inserted between cover and straightedge, cover should be replaced.
4. Measure thickness and diameter of outer rotor. If thickness is less than .649″ and diameter less than 2.469″, replace outer rotor. In same manner, measure thickness of inner rotor. If less than .649″, replace inner rotor.
5. Slide outer and inner rotors into pump body and place a straightedge across the face (between bolt holes). If a feeler gauge of more than .004″ can be inserted between rotors and straightedge, replace pump body.
6. Remove inner rotor and shaft, leaving outer rotor in pump cavity. Press outer rotor to one side with fingers and measure clearance between rotor and pump body. If clearance is more than .012″, replace pump body.
7. Measure clearance between inner and outer rotors. If more than .010″, replace both rotors.
8. Check relief valve plunger for scoring and for free operation. If scored, replace. If relief valve spring is replaced, the same color should be used unless oil pressure is above or below normal. Standard spring is red, light spring is gray, and heavy spring is brown.
9. Install new oil seal rings between cover and body. Tighten attaching bolts to 130 inch lbs. and install pump to engine. Tighten pump attaching bolts to 200 inch lbs.

98A Engine

As shown in Fig. 21, this oil pump is the rotor type, similar to the one shown in Fig. 20. Inspect the pump in the same manner as outlined above but to the following specifications:

1. Clearance between cover and rotors should be .0015″; if more, replace cover.
2. If thickness of outer rotor measures less than .998″, or if diameter is less than 2.244″, replace outer rotor.
3. If thickness of inner rotor measures less than .998″, replace rotor.
4. If feeler gauge of more than .004″ can be inserted between rotors and straightedge, replace both rotors.
5. If clearance between outer rotor and pump body exceeds .012″, replace pump body.
6. If clearance between inner and outer rotors exceed .006″, install new rotors.
7. If relief valve plunger is scored, install new plunger.
8. If relief valve spring has to be replaced, install new spring of same color unless pressure is too high or too low. Use gray spring if pressure is too high; brown spring if pressure is too low. Red spring is standard.

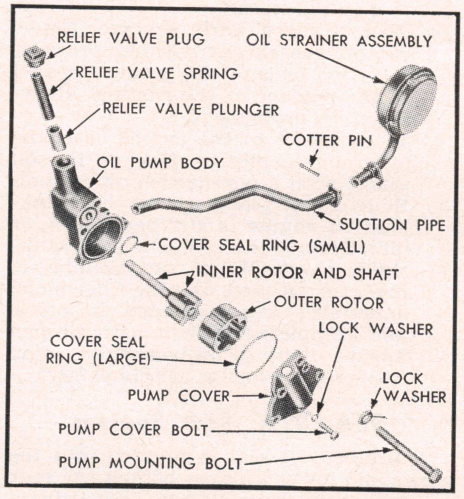

Fig. 21 Oil pump and filter. 98A engine

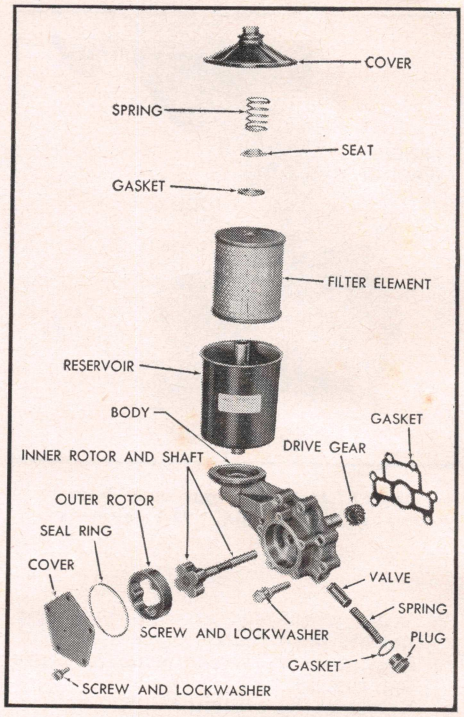

Fig. 20 Oil pump and filter. 96A, 97A engines

WATER PUMP

90AA, 91AA Engines

Disassemble, 90AA

1. Remove bolt from impeller hub and with a puller remove impeller from shaft. *Do not drive or pound on pump shaft or carbon seal on shaft will be damaged.*
2. Remove impeller snap ring and remove seal from impeller hub.
3. If shaft is to be removed, loosen set screw and, with a puller, pull fan hub from shaft.
4. Remove snap ring and press shaft and bearing assembly out of pump body toward the front end.

Disassemble, 91AA

1. Pull fan hub from shaft, Fig. 22.
2. Remove pump from engine.

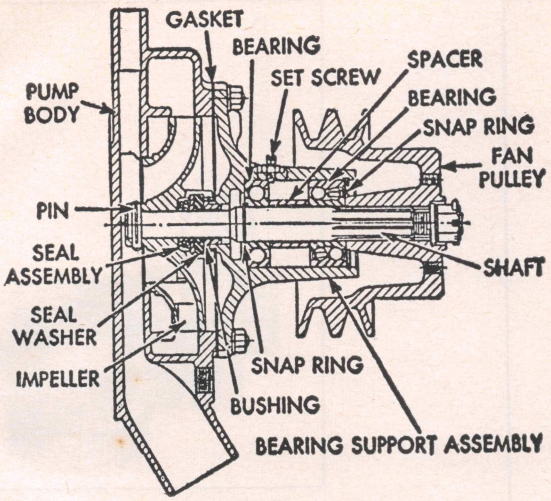

Fig. 22 Water pump. 91AA engine

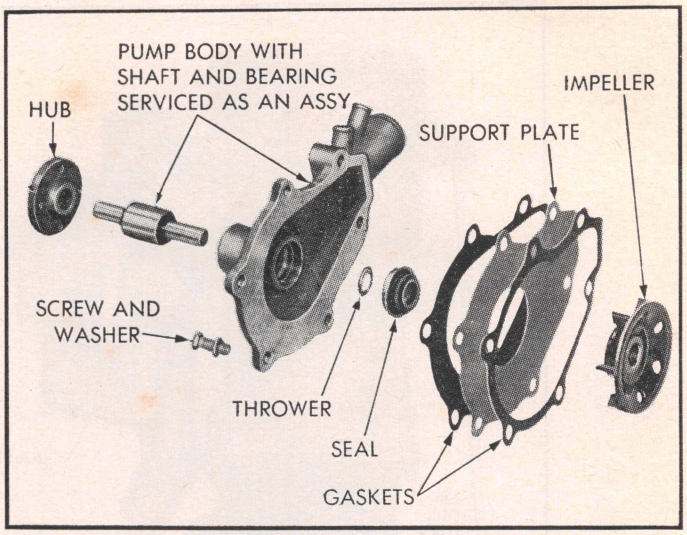

Fig. 23 Water pump. 96A, 97A, engines

3. Remove pump cover by taking out countersunk screws.
4. Use puller to remove impeller. *Do not attempt to drive pump shaft out through rear of housing as housing will be ruined.*
5. Remove seal and water shedder.
6. Remove lock ring holding shaft and bearing assembly in body. Then force shaft out of body with a lead hammer or arbor press.

Reassemble, 90AA, 91AA

1. Reassemble pump, replacing worn or damaged parts and reverse disassembly procedure. Seal contact surface must be smooth and flat. Bushing should be replaced if scored or cut, but may be refaced and polished for further use if not excessively worn or grooved.
2. Use thick soapsuds on both seal and shaft when assembling to prevent damage to seal.
3. Mount pump on engine using a new housing gasket.

96A, 97A Engines

This water pump, Fig. 23, has an aluminum casting and is not serviceable. If pump is defective, replace with a new one.

1. Loosen drive belt adjusting strap and move alternator toward engine.
2. Remove fan, spacer, pulley and belt.
3. Remove pump inlet hose and heater hose (if equipped).
4. Remove clamp from by-pass hose.
5. Remove pump body-to-housing bolts and push pump body down off by-pass hose.
6. Installation is made in reverse order of removal, using the two long bolts above and below the inlet hose. Tighten bolts to 30 ft. lbs.

98A Engine

Disassemble, Fig. 24

1. Place pump in a vise.
2. Break away plastic impeller from metal insert.
3. Use puller to remove insert.
4. Place pump in arbor press, front side down. *Apply pressure completely around mounting flange to avoid breaking pump housing.*
5. Press water pump shaft and bearing assembly out through front of pump and discard.

Assemble

1. Press new pump shaft and bearing assembly in through front of housing until shoulder of bearing is 3/32" below machined surface of housing. *Press on outer race only. Pressing on shaft will damage bearings, making pump noisy.*
2. Reface pump seal seat.
3. Install new seal and retaining washer. When inserting impeller on shaft, be sure flats on impeller interlock with lugs on thrust washer. Support hub end of shaft when pressing on impeller to avoid damaging bearing.
4. Support impeller end of pump shaft and press pump hub on shaft until it is assembled to 21/64" between front end of shaft and front face of hub.

IGNITION TIMING

If a timing light is to be used to set ignition timing, disconnect the vacuum advance pipe to the carburetor and place a piece of tape over open end of pipe. *This is important as carburetor trouble can affect timing adjustments.*

Lacking a power timing light, an accurate method of setting ignition timing with the engine stopped is with the aid of a jumper light. Be sure to use a light bulb that corresponds with the system voltage of the vehicle.

1. Remove distributor cap and rotor and see that the breaker gap is set according to specifications.
2. Rotate engine until No. 1 cylinder is at the ignition timing point as indicated by the timing pointer and timing mark being lined up with each other.
3. Connect the jumper light between distributor ignition terminal and ground.
4. Turn on ignition switch.
5. Loosen distributor and turn it in the direction of normal rotation until the points just close (light out). Then slowly turn distributor in the opposite direction just to the exact point that the light goes on. Tighten distributor in this position.

ZENITH CARBURETOR

Before making any adjustments on the carburetor, it is important that the breaker points and spark plugs are in good condition and properly set. The ignition timing should be checked and the valves operating properly.

Check all carburetor body and flange screws for tightness and make sure there are no gasket leaks, Fig. 25.

Float Level

As shown in Fig. 26, measure the distance between the bottom of the float and the machined surface of the casting. Hold the casting, without gasket, upside down as shown. With float closed, distance indicated should be 1 31/64". To change the float setting, bend the float lever (close to float body) as required.

Idle Speed & Mixture Adjustment

The idle adjustment should be set to the highest and steadiest vacuum reading with a vacuum gauge. Idle speed is regulated by the throttle stop screw, Fig. 25. Idle mixture is controlled by the idle ad-

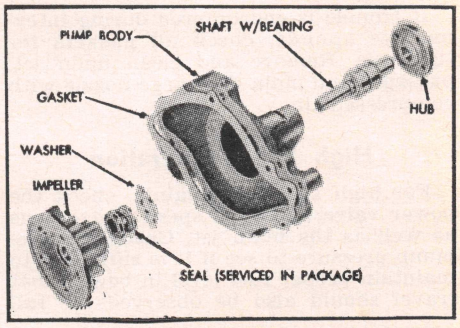

Fig. 24 Water pump. 98A engine

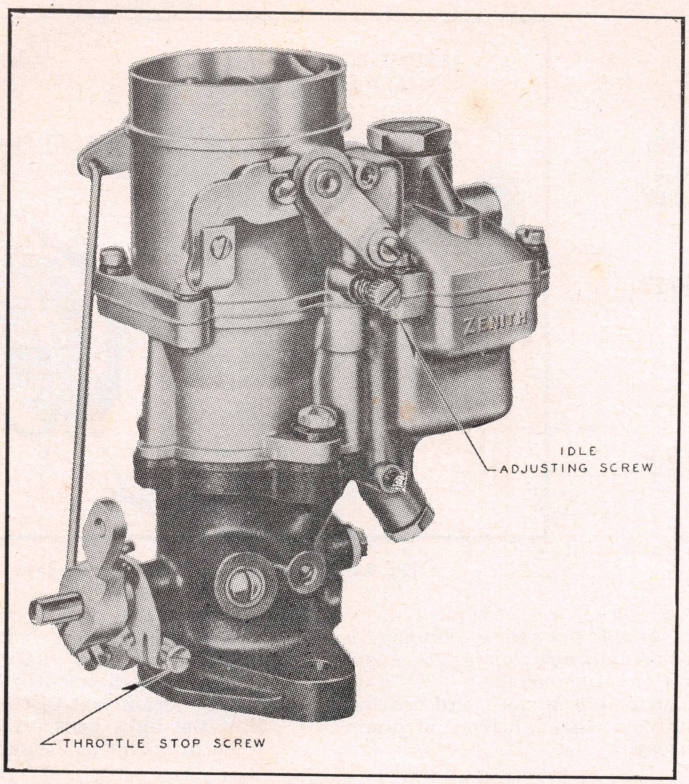

Fig. 25 Zenith carburetor

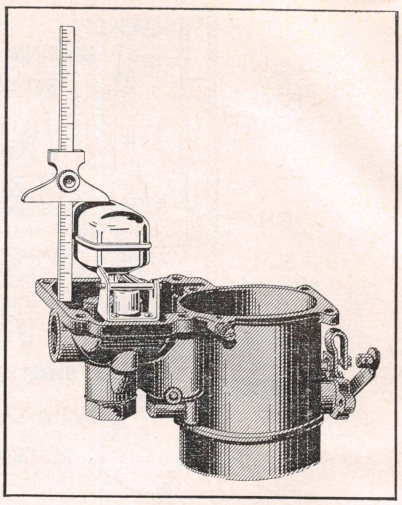

Fig. 26 Checking float level on Zenith carburetor

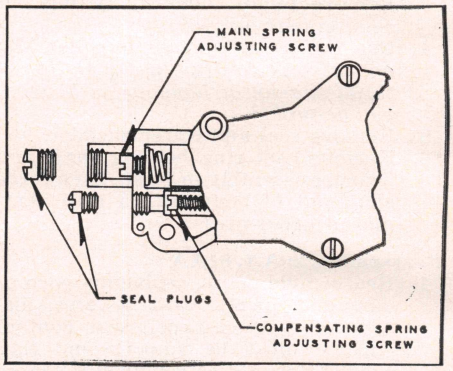

Fig. 27 Carburetor governor adjustment

justment needle. Turning the needle clockwise increases the suction on the idle jet and causes a richer mixture. Turning the needle counter-clockwise causes a leaner mixture.

Accelerating Pump

If the engine does not accelerate properly, remove the air horn assembly and operate the pump with the carburetor bowl full of fuel. Force the pump piston down in its cylinder and note if the air vent check valve leaks. Repeat this operation, noting if the check valve leaks, allowing fuel to be forced back into the fuel bowl through the channel leading from the bottom of the pump cylinder back into the bowl. Repeat this operation again and observe the discharge of fuel at the accelerating jet. If the system is in good condition, a fine, solid, round stream will flow from the discharge nozzle.

Intermediate Operation

If trouble is encountered during intermediate speeds, check all gaskets for tightness. Remove and clean main jet, passages and main discharge nozzle with compressed air.

High Speed Operation

For high speed complaints, check the power valve and high speed restrictions as well as the main jet. Check the fuel pump pressure to see if it is sufficient to maintain proper fuel level in bowl. Float travel should also be observed for full opening of the float needle valve. The vacuum piston should fit properly in place and operate satisfactorily with no air leaks between piston and intake manifold.

CARBURETOR GOVERNOR

If smooth accurate governor action is to be obtained, friction of the throttle shaft and its bearings must be avoided. Most governor failures are due to the accumulation of carbon on the throttle shaft bearings.

Many governor failures can be temporarily corrected without complete disassembly of the carburetor and governor by the application of a good penetrating oil to the throttle shaft bearings. These can be reached by removing the carburetor and applying penetrating oil to the throttle shaft openings on the inside of the throttle body bore. Use care when applying the oil as excessive use will increase carbon formation.

Speed Adjustment

1. Warm up engine to normal operating temperature.
2. Remove seal wire and large seal plug, Fig. 27.
3. To increase speed, turn main spring adjusting screw clockwise; to reduce speed, turn counter-clockwise. *If governor does not show definite response to changes of ¼ to 1 full turn, it indicates a defective governor.*
4. After adjustment has been made, install seal plug and wire.

Surge Elimination

Surge is a condition of intermittent increase and decrease of engine speed. If a surge has developed or the governor is too sensitive, adjust as follows:

1. Remove seal wire and small seal plug, Fig. 27.
2. Turn compensating spring block adjusting screw ¼ turn counter-clockwise until surge is overcome.
3. Install seal plug and wire.

Slow Governor Correction

If the governor does not respond quickly enough when the governed speed is approached and the action can be considered "lagging" or "flat", adjust as follows:

1. Remove seal wire and small seal plug, Fig. 27.
2. Turn compensating spring block adjusting screw clockwise until "lag" or "flatness" is overcome. *Do not change adjustment more than ½ turn at a time without checking performance of vehicle on the road.*
3. After adjustment has been made, install seal plug and wire.

Clutch, Transmission, Rear Axle, Steering Gear

CLUTCH

The clutch, Fig. 1, is a dry, single plate type with a mechanical vibration damper. The clutch release bearing is of the thrust ball bearing type, prepacked and, therefore, requires no further lubrication. The clutch shaft pilot bearing is also of the ball bearing type, packed with lubricant at assembly, and requiring no further attention until made accessible when the clutch is being serviced.

1. Disconnect speedometer cable, hand brake lever control, propeller shaft and any other supplementary item necessary for transmission removal.
2. Remove transmission and bell housing.
3. Remove flywheel-to-clutch capscrews, turning them a little at a time until spring tension is relieved, and remove clutch and clutch disc. *If the same clutch is to be reinstalled, be sure to mark flywheel and clutch cover for reassembly in the original position to preserve the balance of the assembly.*
4. Install the new clutch in the reverse order of removal and adjust pedal free play.

Pedal Free Play, Adjust

Proper clearance between clutch release bearing and clutch levers is obtained by removing the clevis pins at the lower end of the release cable. Loosen the clevis lock nut and rotate the clevis as required to obtain 1" free play in the pedal.

TRANSMISSIONS

Figs. 1 and 2 illustrate the transmissions used in these trucks. See the Warner Transmission chapter for service procedures.

REAR AXLE

Axle Shaft, Remove

1. Raise vehicle and place stand jacks under rear axle housing.
2. Remove wheel and brake drum.
3. Remove four nuts from bearing retainer bolts on inside of axle flange.
4. Attach axle shaft puller and remove axle shaft and bearing assembly.
5. Install bolt and nut to hold brake backing plate on axle housing.

Bearing or Oil Seal, Replace

1. With a chisel, nick soft ring next to bearing and remove ring. The

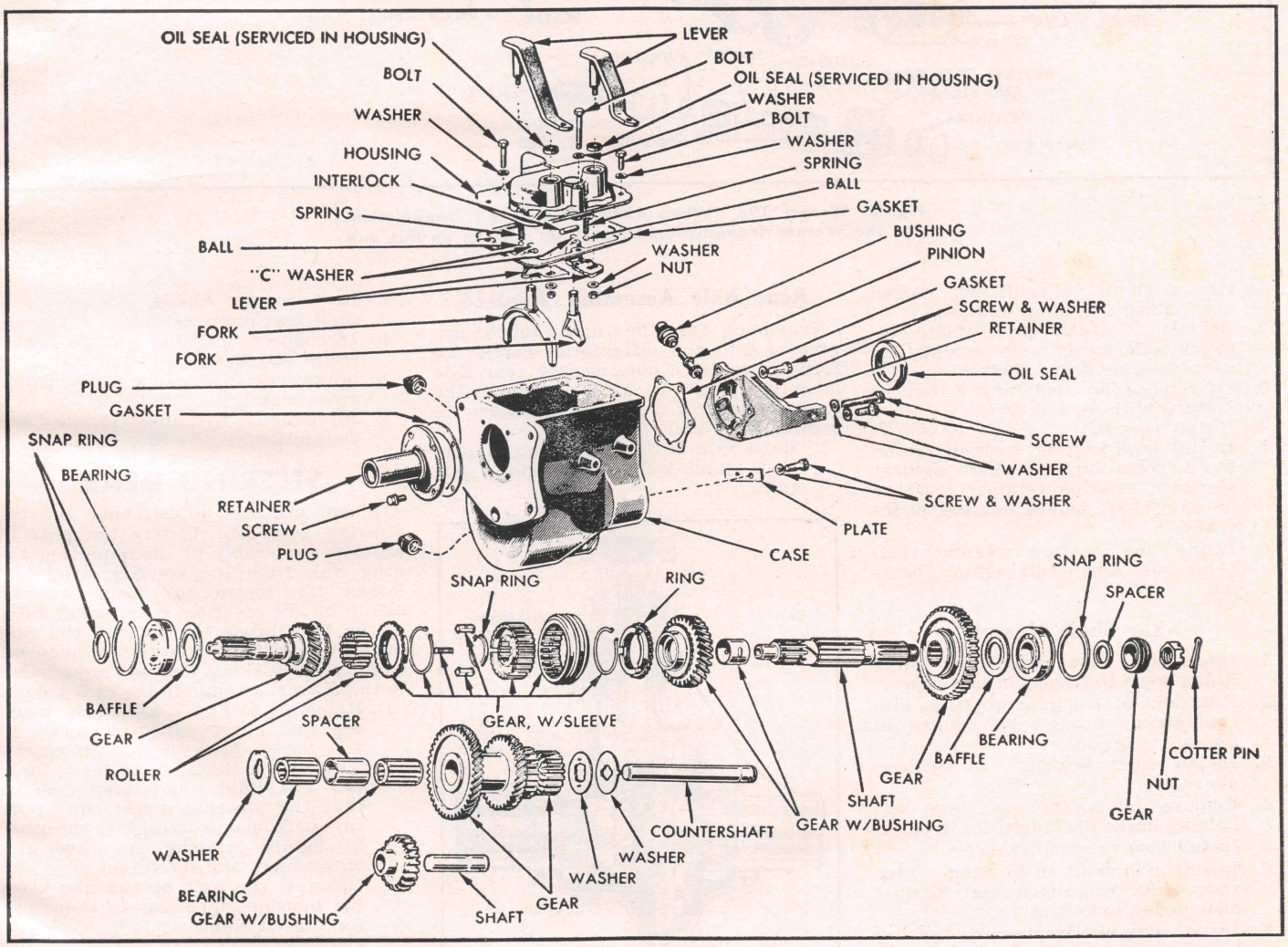

Fig. 1 Warner T87E (White 304B, 305B) three speed transmission. See the Warner Transmission Chapter for service on this unit

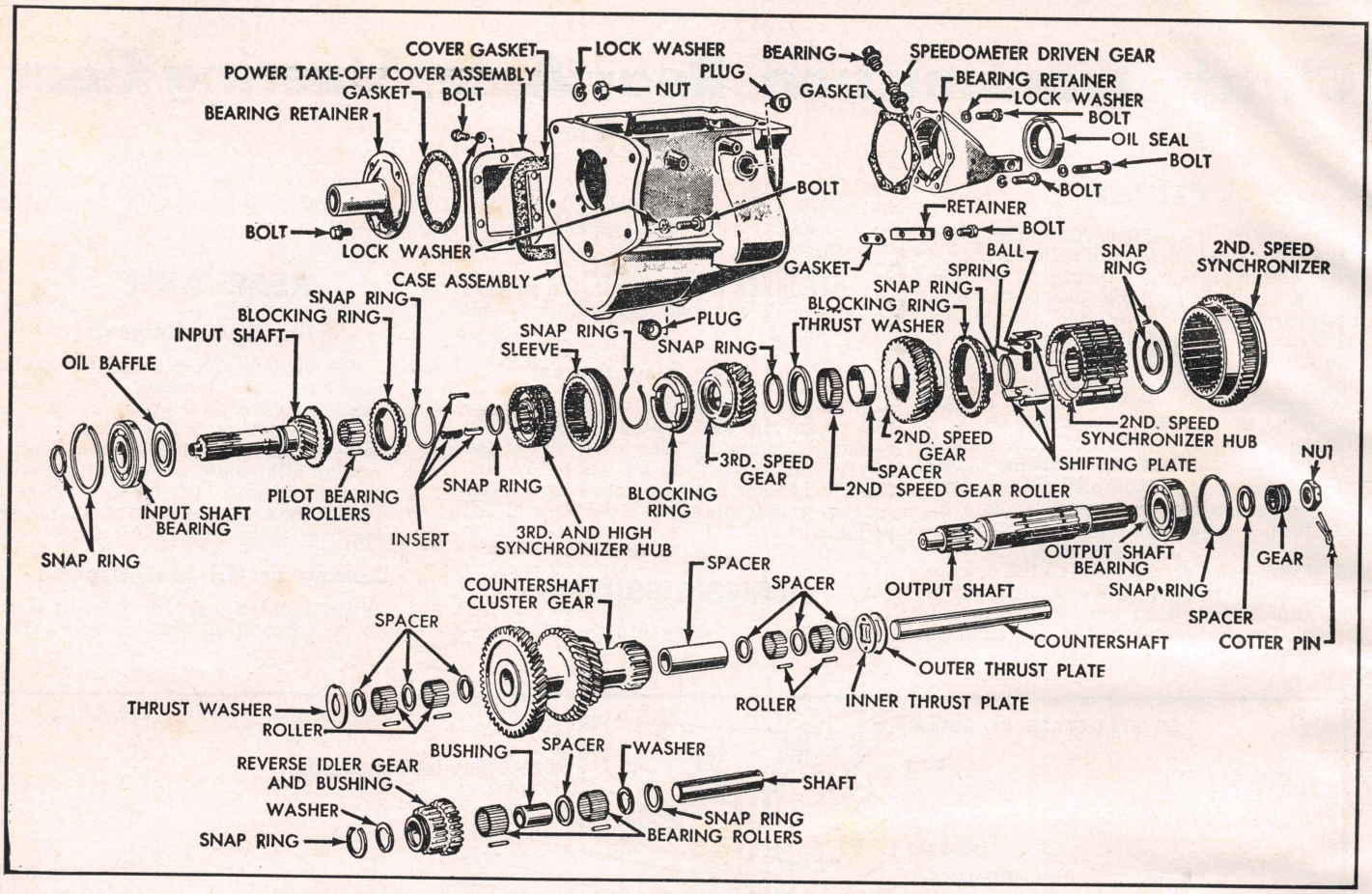

Fig. 2 Warner T98 (White 426B) four speed transmission. See the Warner Transmission Chapter for service on this unit

ring need not be split, only nicked deep enough to allow removal.

2. Install a suitable press plate between axle flange and bearing and press bearing from shaft.
3. To replace oil seal, pry it out of housing with screwdriver.
4. Install new seal.
5. Install new bearing, pressing it on so it seats on the shaft against shoulder. Bearing retainer must be on axle shaft before bearing is installed.
6. Install new bearing retainer ring, being sure ring seats against bearing.

Axle Shaft, Install

1. Insert five new bolts and force heads down to flange on new axle.
2. Peen end of shoulder on bolts into countersink around bolt holes in flange.
3. Install new bearing as outlined above.
4. Remove temporary nut and bolt holding brake backing plate in place.
5. Install new retainer gasket.
6. Install axle shaft in housing. Outer race of bearing must seat against shoulder in axle housing.
7. Install nuts and washers on bearing retainer bolts and tighten securely.
8. Install brake drum and wheel.

Rear Axle Assembly, Replace

Inasmuch as the axle tubes are pressed into the differential carrier to form a one-piece housing, the rear axle assembly must be removed from the chassis when it becomes necessary to overhaul the unit.

1. Raise vehicle from floor and support with stand jacks under frame side rails.

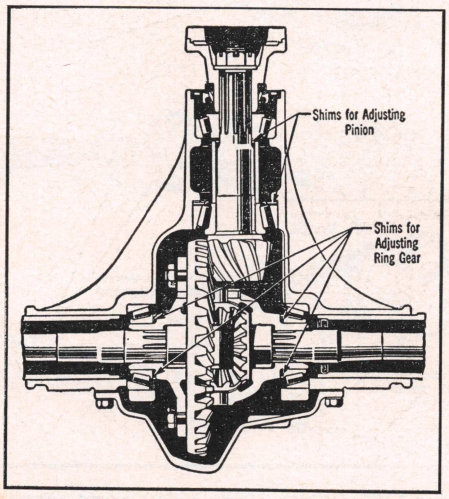

Fig. 4 Spicer rear axle adjustments

2. Remove rear wheels.
3. Split rear universal joint.
4. Disconnect parking brake cable from equalizer rod and unfasten brake cable brackets from frame cross member.
5. Disconnect hydraulic brake line connection at rear axle housing.

STEERING GEAR

When making adjustments on the steering gear, Fig. 6, free the gear of all load, preferably by disconnecting the drag link from the steering arm, and loosen the instrument panel bracket clamp on the steering gear jacket tube. If the ball thrust bearings on the cam must be adjusted, make this adjustment first before making the side adjustment to the lever shaft stud in the cam groove.

1. Referring to Fig. 7, loosen the housing side cover adjusting screw to free the studs in the cam groove.
2. Adjustment should be made so there is a very slight drag but not so much that the steering wheel cannot be turned from one extreme to the other by lightly gripping the wheel rim with thumb and forefinger.
3. Unscrew the four screws and raise the housing upper cover to permit removal of shims.
4. Clip and remove a thin shim or more as required and draw cover down tight against shims.

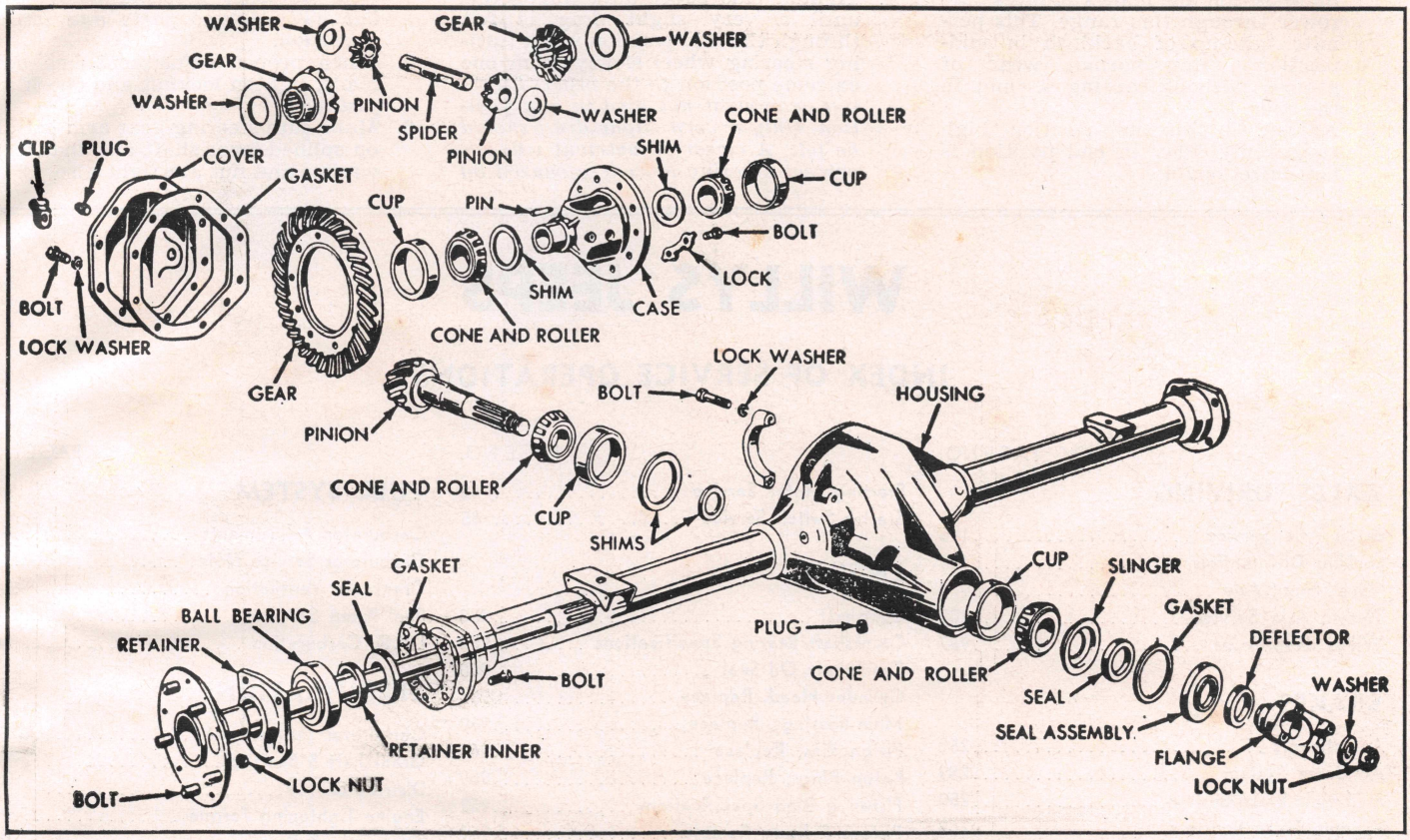

Fig. 3 Disassembled view of Spicer rear axle

5. Test as outlined in Step 2 and if necessary, remove or replace shims until adjustment is correct.

Lever Shaft Stud, Adjust

1. Backlash at this point shows up as end play of lever shaft, also as backlash at steering wheel and at ball on steering arm.
2. The groove is purposely cut deeper in ends of cam than at mid-position. This produces a high range through

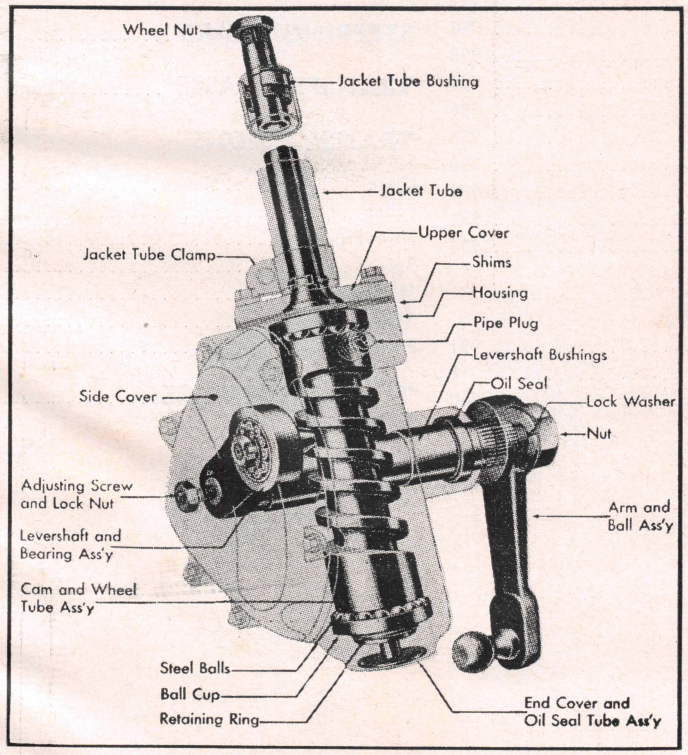

Fig. 5 Ross steering gear assembly

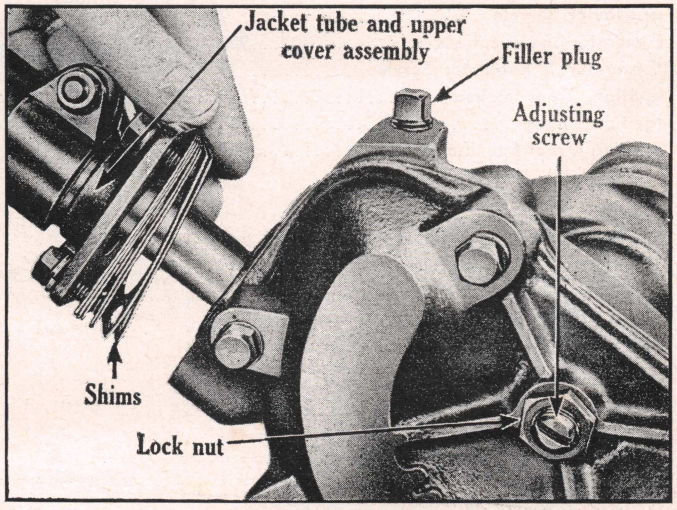

Fig. 6 Steering gear adjustments

mid-position and makes grooves narrower through this range. This permits take-up of backlash in mid-position, after normal wear of groove, without causing a bind in the ends.

3. Adjust to this mid-position high range only. Play in end position is not objectionable.
4. Tighten side cover adjusting screw until a very slight drag is felt through the mid-position when turning steering wheel slowly from one extreme position to the other. *Steering gear must not bind in any position. Only a very slight drag should be felt. A closer adjustment will not correct steering looseness caused by wear in other steering gear units, but will damage parts and impair operation.*
5. When proper adjustment has been made, tighten locknut and check adjustment.
6. Make sure steering gear arm is tight on splined lever shaft and that lockwasher and nut are tight also.

WILLYS JEEPS

INDEX OF SERVICE OPERATIONS

PAGE NO.

AXLES, DRIVING

Eaton Axle Service 176
Locking Differentials 169
"Live" Front Axle 970
Timken Axle Service 209
Willys Jeep Axles 967

BRAKES

Adjustments 252
Air Brake System 259
Hydraulic Brake System 250
Vacuum Brake Boosters 268

CLUTCH 963

COOLING SYSTEM

Cooling System Capacity 951
Water Pump Repairs 961
Water Pump, Replace 961

ELECTRIC SYSTEM

Alternators & Regulators 37
Dash Gauge Service 93
Distributor, Replace 961
Distributor Specifications 953
Distributor Service 7
Generator Specifications 952
Generator & Regulator Service 27
Ignition, Transistorized 22
Ignition Timing 961
Starting Motor Specifications 953

PAGE NO.

Starting Motor Service 65
Starter Switch Service 85

ENGINE

Camshaft 958
Crankshaft Bearing Specifications 952
Crankshaft Oil Seal 960
Cylinder Head, Replace 954
Main Bearings, Replace 960
Piston Pins, Replace 960
Piston Rings, Replace 959
Piston & Ring Specifications 952
Pistons & Rods, Remove 959
Piston & Rod, Assemble 959
Pistons, Replace 959
Rocker Arm Service 954
Rocker Arm Studs 954
Rod Bearings, Replace 960
Timing Case Cover 957
Timing Chain 958
Timing Gears 958
Valves, Adjust 954
Valves, Grind 956
Valve Guides 956
Valve Lifters 956
Valves, Remove 955
Valve Specifications 951
Valve Springs 956

ENGINE OILING

Crankcase Capacity 951
Crankcase Ventilation 6
Oil Pump Repairs 960

PAGE NO.

FUEL SYSTEM

Carburetor Adjustments 962
Carburetor Service Notes 962
Crankcase Ventilation 6
Fuel Pump Service 104
L.P.G. Carburetion 109

SPECIFICATIONS

Carburetor Adjustment 962
Crankshaft & Bearing 952
Distributor 953
Engine Tightening Torque 952
Generator & Regulator 952
Piston, Pin & Ring 952
Starting Motor 953
Tune Up 951
Valve 951
Wheel Alignment 953

STEERING GEARS 972

TRANSFER CASES ..... 242 and 965

TRANSMISSIONS

Clark 110
Fuller 122
New Process 135
Spicer 141
Warner 164
Willys Jeep 964
Powermatic 281

TUNE UP SERVICE 2

MODEL INDEX & ENGINE APPLICATION

ENGINE IDENTIFICATION—Model stamped on plate attached to engine.

Vehicle Model	Engine Make	Engine Type	Oil Pan Capacity, Qts.	Cooling Capacity, Qts.	Vehicle Model	Engine Make	Engine Type	Oil Pan Capacity, Qts.	Cooling Capacity, Qts.
CJ-3A	Own	L Head 4	4	11	FJ-3A	Own	F Head 4	4	11
CJ-3B	Own	F Head 4	4	11	F4-134	Own	F Head 4	4	11
CJ-5	Own	F Head 4	4	11	FC-150	Own	F Head 4	4	11
CJ-6	Own	F Head 4	4	11	FC-170	Own	L Head 6	5	11
DJ-3A	Own	L Head 4	4	11	6-230	Own	OHC-6	5	11
FJ-3	Own	F Head 4	4	11	L6-226	Own	L Head 6	5	11

GENERAL ENGINE SPECIFICATIONS

Truck Model	Engine Type	No. Cyls. & Valve Location	Bore & Stroke	Piston Displacement Cubic Inch	Compression Ratio	Maximum Brake H. P. @ R. P. M.	Maximum Torque Lb. Ft. @ R. P. M.	Normal Oil Pressure, Lbs.
CJ-3A	L Head 4	4 In Block	3 1/8 x 4 3/8	134	6.48	60 @ 4000	105 @ 2000	35
CJ-3B	F Head 4	4①	3 1/8 x 4 3/8	134	6.90	70 @ 4000	114 @ 2000	35
CJ-5	F Head 4	4①	3 1/8 x 4 3/8	134	6.90	70 @ 4000	114 @ 2000	35
CJ-6	F Head 4	4①	3 1/8 x 4 3/8	134	7.40	72 @ 4000	114 @ 2000	35
DJ-3A	L Head 4	4 In Block	3 1/8 x 4 3/8	134	7.40	72 @ 4000	114 @ 2000	35
FJ-3, 3A	F Head 4	4①	3 1/8 x 4 3/8	134	7.40	72 @ 4000	114 @ 2000	35
F4-134	F Head 4	4①	3 1/8 x 4 3/8	134	7.40	72 @ 4000	114 @ 2000	35
FC-150	F Head 4	4①	3 1/8 x 4 3/8	134	7.40	72 @ 4000	114 @ 2000	35
FC-170	L Head 6	6 In Block	3 5/16 x 4 3/8	226	6.86	115 @ 3650	190 @ 1800	35
L6-226	L Head 6	6 In Block	3 5/16 x 4 3/8	226	6.86	115 @ 3650	190 @ 1800	35
6-230	OHC-6		3 11/32 x 4 3/8	230	8.50	140 @ 4000	210 @ 1750	50

①—Intake valves in head, exhaust in block.

TUNE UP & VALVE SPECIFICATIONS

Vehicle Model	Engine Type	Firing Order	Spark Plugs		Dist. Breaker Gap	Cam Angle Deg.	Ignition Timing		Valve Seat Angle	Valve Clearance		Valve Spring Pressure Lbs. @ Inches
			Type ③	Gap			Timing Mark	Location		Intake	Exhaust	
CJ-3A	L Head 4	1342	J8	.030	.020	42	5°	Pulley	45	.016C	.016C	120 @ 1 3/4
CJ-3B	F Head 4	1342	J8	.030	.020	42	5°	Pulley	45	.018C	.016C	②
CJ-5	F Head 4	1342	J8	.030	.020	42	5°	Pulley	45	.018C	.016C	②
CJ-6	F Head 4	1342	J8	.030	.020	42	5°	Pulley	45	.018C	.016C	②
DJ-3A	L Head 4	1342	J8	.030	.020	42	5°	Pulley	45	.016C	.016C	120 @ 1 3/4
FJ3, 3A	F Head 4	1342	J8	.030	.020	42	5°	Pulley	45	.018C	.016C	②
F4-134	F Head 4	1342	J8	.030	.020	42	5°	Pulley	45	.018C	.016C	②
FC-150	F Head 4	1342	J8	.030	.020	42	5°	Pulley	45	.018C	.016C	②
FC-170	L Head 6	153624	J8	.030	.020	39	5°	Damper	①	.014C	.014C	118 @ 1 5/16
L6-226	L Head 6	153624	J8	.030	.020	39	5°	Damper	①	.014C	.014C	118 @ 1 5/16
6-230	OHC-6	153624	L7	.030	.020	38	5°	Damper	45	.006C	.008C	57 @ 1 1/2

①—Intake 30°, exhaust 45°. ②—Intake 160 @ 1 3/8″, exhaust 120 @ 1 3/4″. ③—Champion.

PISTON, PIN, RING, CRANKSHAFT & BEARING SPECIFICATIONS

Engine Type	Wristpin Diameter	Piston Clearance, Inch ②	Ring End Gap, In. (Minimum)		Crankpin Diameter, In.	Rod Bearing Clearance, In.	Main Bearing Journal Diameter, In.	Main Bearing Clearance, Inch	Thrust On Bearing Number	Shaft End Play
			Comp.	Oil						
L Head 4	.812	.003①	.008	.008	1.9375–1.9385	.0005–.0025	2.3331–2.3341	.0014–.0029	1	.006 Max.
F Head 4	.812	.003①	.008	.008	1.9375–1.9385	.0005–.0025	2.3331–2.3341	.0014–.0029	1	.006 Max.
L Head 6	.859	.0015①	.007	.007	2.0619–2.0627	.0005–.0018	2.3744–2.3752	.0007–.0020	1	.006 Max.
6-230	.8592	.0015①	.010	.015	2.0619–2.0627	.0006–.0025	2.3747–2.3755	.0005–.0025	Rear	.003–.007

①—Using a ¾″ (½″ on 6-226) wide feeler, a pull of 5 to 10 lbs. should be required to pull feeler past piston.
②—Pistons removed from above.

GENERATOR & REGULATOR SPECIFICATIONS

★To Polarize Generator: For internally grounded systems, disconnect field lead from regulator and momentarily flash this wire to regulator battery terminal. For externally grounded systems, connect jumper wire from "hot" side of battery to armature terminal of generator.

Generator						Regulator					
Gen. No. ①	Rotation and Ground Polarity ③	Brush Spring Tension, Oz.	Rated Cap. Amps.	Gen. Field Ground Location★	Field Current	Reg. No. ②	Cutout Relay		Voltage Setting	Current Setting	Current & Voltage Reg. Arm. Air Gap, In.
							Closing Voltage	Arm. Air Gap, In.			
GDZ-6001D	C-N	35–53	35	External	1.3–1.5④	VRP-6003A	6.3–6.8	⑤	7.2	34–36	.048–.052
GGW-4801D	C-P	35–53	45	External	1.4–1.5④	VBE-6105A	6.3–6.8	⑤	7.2	45	.048–.052
GGW-4801EN	C-P	35–53	45	External	1.4–1.5④	VBE-6105A	6.3–6.8	⑤	7.2	45	.048–.052
GJC-7002J	C-N	18–36	30	External	1.2–1.3⑥	VRX-6009B	13.1	⑤	14.3	30	.048–.052
GJC-7002K	C-N	18–36	30	External	1.2–1.3⑥	VRX-6009B	13.1	⑤	14.3	30	.048–.052
GJP-7202A	C-N	18–36	35	External	1.6–1.7⑥	VBO-4201E	13.1	.032	14.5	35	.050
GJP-7202B	C-N	18–36	35	External	1.6–1.7⑥	VBO-4201E	13.1	.032	14.5	35	.050

①—Stamped on plate riveted to housing.
②—Stamped on regulator base.
③—As viewed from drive end; C—Clockwise. P—Positive. N—Negative.
④—At 5 volts.
⑤—Circuit breaker air gap, .031–.034″; circuit breaker point opening, .015″ Min.
⑥—At 10 volts.

ENGINE TIGHTENING SPECIFICATIONS★

★Torque specifications are for clean and lightly lubricated threads only. Dry or dirty threads produce increased friction which prevents accurate measurement of tightness.

Engine Type	Spark Plugs Ft. Lbs.	Cylinder Head Bolts Ft. Lbs.	Intake Manifold Ft. Lbs.	Exhaust Manifold Ft. Lbs.	Arm Shaft Bracket Ft. Lbs.	Rocker Arm Cover Ft. Lbs.	Connecting Rod Cap Bolts Ft. Lbs.	Main Bearing Cap Bolts Ft. Lbs.	Flywheel to Crankshaft Ft. Lbs.	Vibration Damper or Pulley Ft. Lbs.
L-Head 4	25–30	60–70	31–35	31–35	None	....	①	65–75	36–40	100–130
F-Head 4	25–30	60–70	29–35	29–35	30–35	....	35–40	65–75	36–40	100–130
L-Head 6	25–30	30–35	30–35	30–35	None	....	40–45	85–95	35–40	100–130
6-230	20–30	75–80	15–20	35–40	...	12–15	40–45	85–95	35–40	100–130

①—For 7/16″ bolts 50–55; for ⅜″ bolts 35–40.

DISTRIBUTOR SPECIFICATIONS

Unit Part No. ①	Rotation ②	Cam Angle, Degrees	Breaker Gap, In.	Condenser Capacity, Mfds.	Breaker Arm Spring Tension, Oz.	Centrifugal Advance Deg. @ R.P.M. of Dist.		Vacuum Advance		
						Advance Starts	Full Advance	Inches of Vacuum to Start Plunger Movement	Inches of Vacuum for Full Plunger Travel	Maximum Vacuum Advance, Dist. Degrees
IAD-4008A	CC	42	.020	.23-.26	17-20	1 @ 425	11 @ 1700	None	None	None
IAD-4041	CC	42	.020	.23-.26	17-20	1 @ 425	11 @ 1700	None	None	None
IAT-4007	CC	39	.020	.21-.25	17-20	1 @ 380	12 @ 1500	3½	15	6
IAT-4008	CC	42	.020	.21-.25	17-20	1 @ 390	11 @ 2000	4¾	8	5
IAT-4008B	CC	42	.020	.21-.25	17-20	1 @ 425	11 @ 1700	5⅛	14	6
IAT-4017A	CC	39	.020	.21-.25	17-20	1 @ 400	9.5 @ 1300	5⅛	14	6
IAT-4204A	CC	42	.020	.21-.25	17-20	1 @ 425	11 @ 1700	5⅛	14	6
IAT-4205A	CC	39	.020	.21-.25	17-20	1 @ 400	9.5 @ 1300	5⅛	14	6
IAT-4206	CC	39	.020	.21-.25	17-20	1 @ 450	9 @ 1675	10	15	5
IAT-4411	CC	38	.020	.20-.25	17-22	1 @ 375	7½ @ 1700	10	15	5
IGW-4189	CC	51	.020	.20-.25	17-20	1 @ 450	11 @ 1500	3½	15	10

① Stamped on plate riveted to housing.
② As viewed from top; CC—Counter-clockwise.

STARTING MOTOR SPECIFICATIONS

Unit Part No. ①	Rotation ②	Brush Spring Tension, Oz.	No Load Test			Torque Test		
			Amperes	Volts	R. P. M.	Amperes	Volts	Torque Lb. Ft.
MCH-6203	C	42-53	65	5.0	4300	335	2.0	6.0
MCH-6207	C	42-53	65	5.0	4300	335	2.0	6.0
MCH-6210	C	42-53	65	5.0	4300	335	2.0	6.0
MZ-4162	C	42-53	68	5.0	4000	280	2.0	4.4
MDY-7021	CC	32-40	60	10	4200	405	4.0	9

① Stamped on plate riveted to housing.
② As viewed from drive end; C—Clockwise.

WHEEL ALIGNMENT SPECIFICATIONS

Model	Caster, Deg.	Camber, Deg.	Toe-In, Inch	Kingpin Inclination, Deg.
CJ-3B	3	1½	3/64-3/32	7½
CJ-5	3	1½	3/64-3/32	7½
CJ-6	3	1½	3/64-3/32	7½
DJ-3A	3	1	3/64-3/32	7½
FJ-3	3	1½	3/64-3/32	7½
FJ-3A	3	1½	3/64-3/32	7½
F4-134	3	1½	3/64-3/32	7½
FC-150	3	1½	3/64-3/32	7½
FC-170	3	1½	3/64-3/32	7½
L6-226-2WD	3	1	1/16	7½
L6-226-4WD	3	1½	3/64-3/32	7½
6-230-2WD	3	1	1/16	7½
6-230-4WD	3	1½	3/64-3/32	7½

Engine Section

CYLINDER HEAD, REPLACE

All Engines

Before the cylinder head is installed, make certain that all dirt and carbon is removed from both the head and block. File or hone all high spots.

Use a torque wrench when tightening down cylinder heads. Uneven or excessive tightening of nuts may distort cylinder bores, causing compression loss and excessive oil consumption.

Tighten cylinder heads in the sequence shown in Figs. 1 to 4, tightening them a little at a time in the proper order a couple of times around before final tightening to the torque values given in the *Engine Tightening Chart*. After the engine has warmed up to operating temperature, recheck the torque and tighten as required.

On F-Head engines, be sure to check intake valve operating clearances after the final tightening.

Service Note

Tightening cylinder heads on F-head engines without removing rocker arms may be accomplished with a wrench having an $\frac{11}{16}''$ box on one end and a $\frac{1}{2}''$ square box on the other end. This, together with a torque wrench will do the job.

Accurate alignment of the cylinder head, gasket and block on L6-226 engines is required to prevent gasket failure. Two cylinder head bolt holes, at opposite corners of the head (positions 24 and 26 in Fig. 4) have a slightly smaller diameter that the other holes and can be used for guide pins.

The guide pins can be made by cutting the heads off two cylinder head bolts. Cut slots in the end from which the heads were removed to install and then remove the guide pins.

The torquing sequence for the head bolts is shown in Fig. 3.

OHC 6-230 Engine

1. To remove head with timing chain cover installed, first take off rocker arm cover.
2. Install camshaft sprocket removal and installation tool on rocker arm cover studs, Fig. 5. Fasten with rocker arm cover nuts. Install hook of removal tool in the sprocket and tighten the nut to relieve the tension on the camshaft.
3. Remove fuel pump eccentric from camshaft sprocket.
4. Pull forward on camshaft sprocket to remove it from pilot on camshaft. With sprocket still engaged in timing chain, release tension on tool by loosening nut. Gently allow sprocket to rest on bosses in timing chain cover. *Caution: Do not turn over engine when sprocket is removed from camshaft and is resting on bosses in cover. This will severely damage cover. Do not attempt to remove camshaft sprocket from timing chain since this will upset the valve timing.*
5. Disconnect lubrication tube from head and block.
6. Remove cylinder head bolts.
7. Lift off head assembly.
8. Reverse the removal procedure to install the head. Position the all-metal head gasket on the block so that the coolant ports and vent ports are properly aligned. Use no sealer or other compound on the gasket. When head is installed, tighten it down in the sequence shown in Fig. 4.

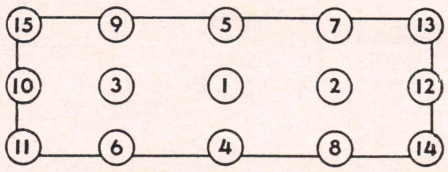

Fig. 1 Head tightening chart on 4-cyl. L-Head engines

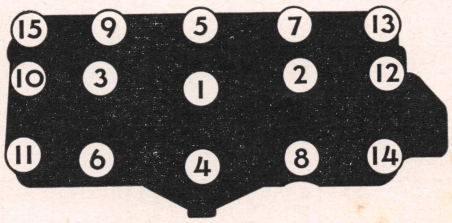

Fig. 2 Cylinder head tightening sequence. Four-cyl. F-head engines

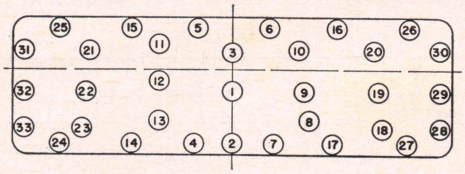

Fig. 3 Cylinder head tightening sequence. 6-226 engine

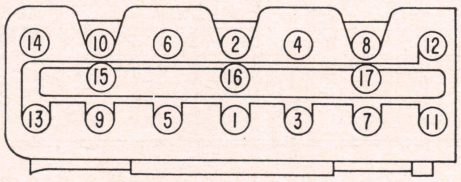

Fig. 4 Cylinder head tightening sequence. 6-230 engine

ROCKER ARM STUDS

OHC 6-230 Engine

If any of the rocker arm studs are worn, distorted or have damaged threads, they may be pressed out of the camshaft bearing deck. Press the nut stud into place until it is firmly seated in cam bearing support deck.

ROCKER ARM SERVICE

F-Head Engines

To remove the rocker arm assembly, proceed as follows:

1. Remove carburetor air cleaner.
2. Disconnect spark plug wires.
3. Drain cooling system.
4. Remove rocker arm cover.
5. Remove rocker arm bracket screws and lift off rocker arm assembly.

Before disassembly, mark rocker arms, brackets and shaft so they can be reassembled in the original positions.

Sludge and gum formation in the rocker arms and shafts will restrict the normal flow of oil to the rocker arms and valves. Each time the rocker arm and shaft assemblies are removed they should be disassembled and thoroughly cleaned.

When disassembling rocker arms, place all parts on the work bench in their proper sequence to insure correct assembly.

Clean all sludge and gum formation from the inside and outside of the shaft. Clean oil holes and passages in the rocker arms and shafts. Clean the oil connector. Inspect the shafts for wear.

Check the ball ends of the rocker arms to be sure they are not pitted or rough. If used in this condition, it will be difficult to maintain valve clearances.

VALVES, ADJUST

L-Head Engines

The valves may be adjusted when the engine is at normal room temperature. Crank the engine over until the valve to be adjusted is fully closed. Hold the lifter body with a tappet wrench to prevent it from turning. Then turn the tappet adjusting screw until the proper clearance is obtained. Measure the clearance with a feeler gauge and, after adjusting one tappet, proceed in like manner with the others, being certain that the valve being adjusted is fully closed.

In addition to the conventional method of adjusting tappets by locating the distributor rotor and then adjusting the tappets by following the firing order of the engine, the following method may also be used:

Four-Cylinder Engines

Valves Fully Raised	Adjust Tappets
1 and 3	6 and 8
2 and 5	4 and 7
6 and 8	1 and 3
4 and 7	2 and 5

Six-Cylinder 226" Engine

Valves Fully Raised	Adjust Tappets
1 and 3	10 and 12

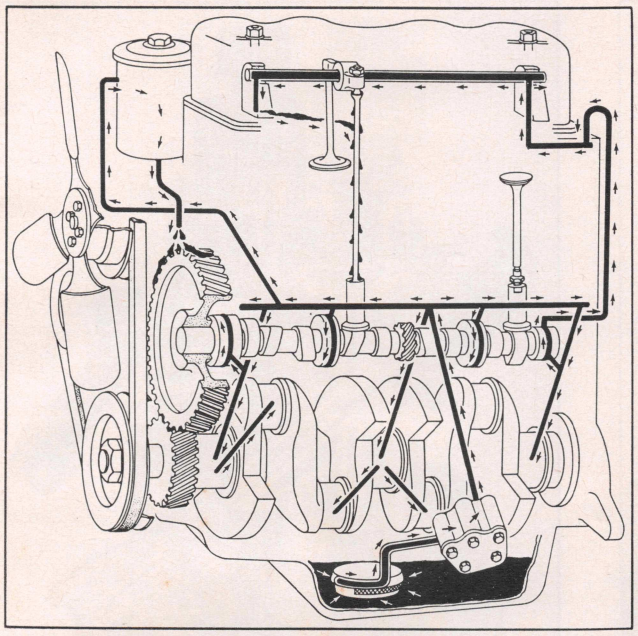

Lubrication diagram for F-Head four cylinder engine

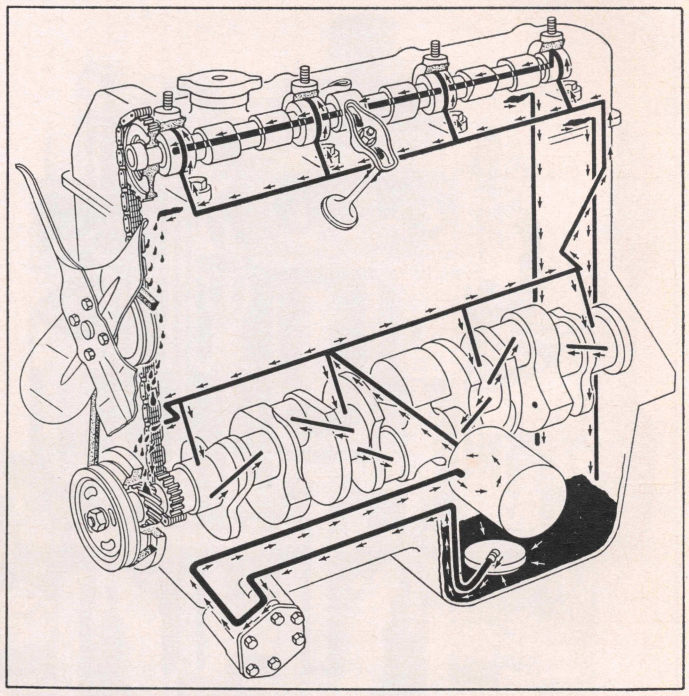

Lubrication diagram for Overhead Camshaft engine

8 and 9	4 and 5
2 and 6	7 and 11
10 and 12	1 and 3
4 and 5	8 and 9
7 and 11	2 and 6

4-Cyl. F-Head Engines

The exhaust valves (in block) may be adjusted in the same manner as outlined for L-head engines. However, the intake valves may best be adjusted with the engine running after it has warmed up to operating temperature.

If the cylinder head has been tightened, be sure to recheck intake valve clearances and adjust as required.

OHC 6-230 Engine

The adjustment may be made when the engine is either hot or cold. *Caution: Do not attempt to remove the rocker arm cover to adjust valve clearance when the engine is running. Always shut down the engine before removing the cover.*

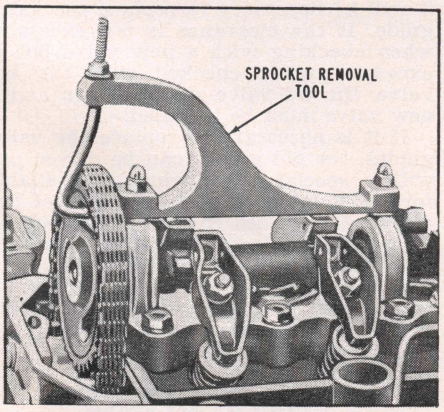

Fig. 5 Camshaft sprocket removal and installation tool for use when removing cylinder head and timing chain. 6-230 engine

1. Remove rocker arm cover.
2. Turn engine over until No. 1 piston is at top dead center. This can be determined by checking the position of the No. 1 cam. When the associated piston is at top dead center, the nose of the cam points to the 6 o'clock position.
3. Insert a feeler gauge between the rocker arm and the top of the valve stem.
4. Use a socket wrench to adjust the clearance. Turning the rocker arm nut clockwise decreases the clearance; counterclockwise increases the clearance.
5. Adjust the valves in this manner for all cylinders, setting the associated cam nose to the 6 o'clock position before adjusting.

VALVES, REMOVE

OHC 6-230 Engine

1. After cylinder head is removed, position cylinder head on blocks to provide hand clearance under the assembly.
2. Remove valve springs. Use hand pressure to hold the valve while compressing the spring, Fig. 6.
3. Remove and discard valve guide seal from top of valve guide.
4. Remove all valves and place them in a numbered rack to make sure each valve will be reassembled in the same valve seat from which it was removed.

L-Head Engines

After removing the cylinder head, take off the valve chamber covers and use cloth to block off the holes in the valve chamber to prevent the valve locks from falling into the crankcase.

With a suitable valve spring compressor, raise the springs on those valves which are closed and remove the valve locks. Then turn the crankshaft until those valves which are open are closed and remove the remaining valve locks.

Remove all valves and place them in a board with numbered holes so they can be identified as to the valve port from which they were removed.

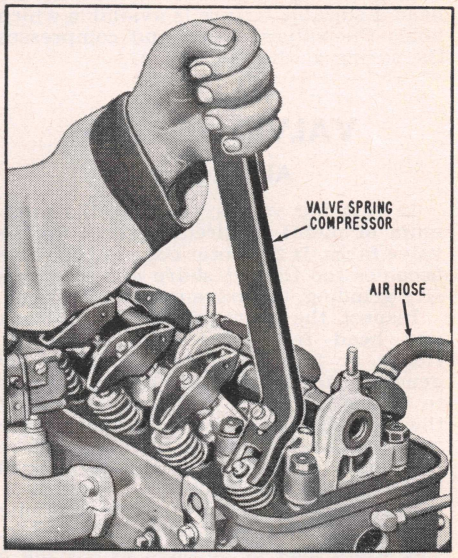

Fig. 6 Compressing valve springs. The air hose shown is attached to an air pressure adapter inserted into a spark plug hole to keep the valve closed when replacing a valve spring with the cylinder head installed. 6-230 engine

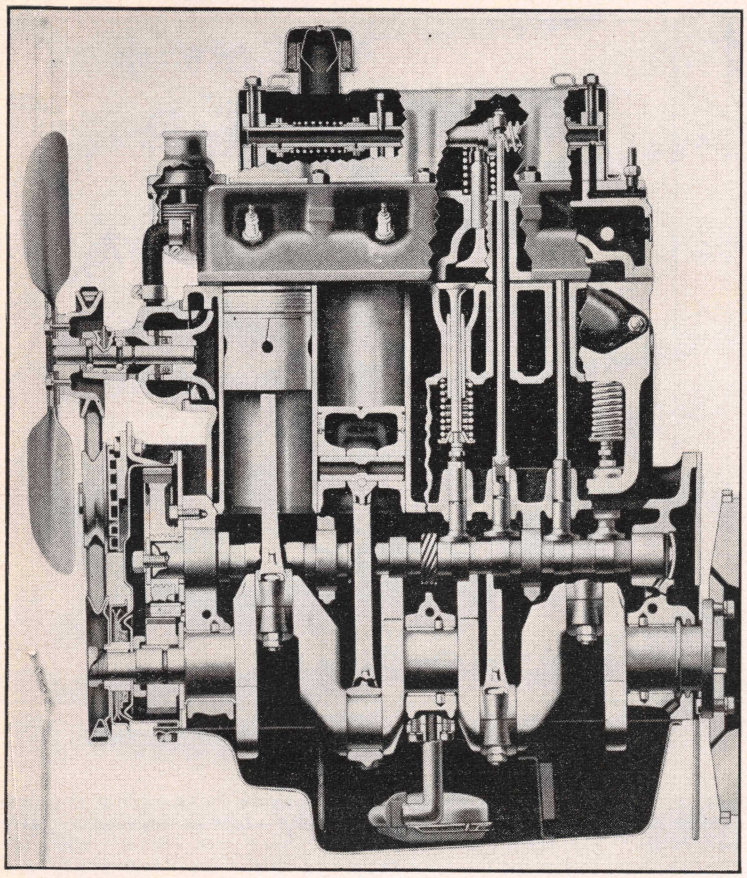

F-Head four-cylinder engine

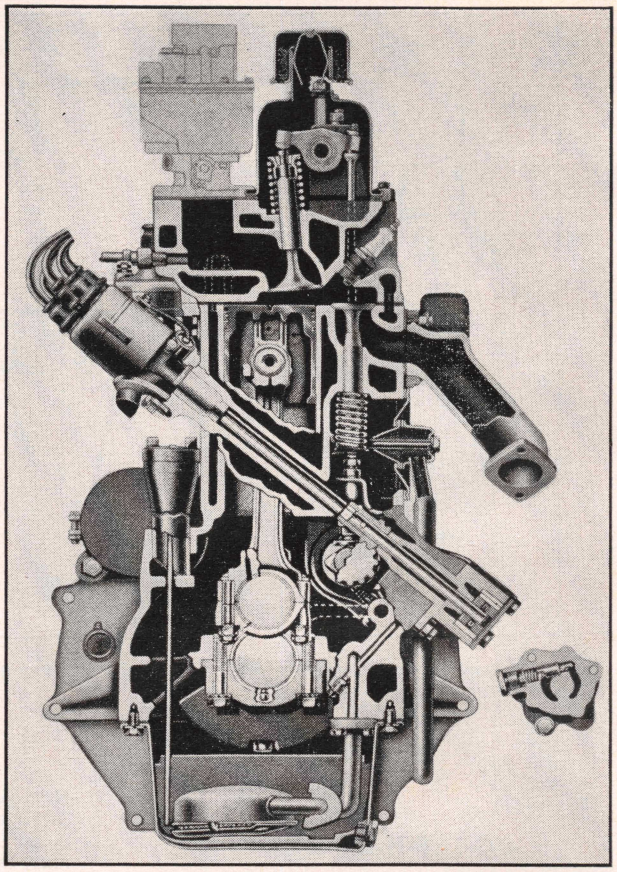

F-Head four-cylinder engine

F-Head Engines

Follow the same procedure in removing the exhaust valves from these engines as outlined for L-head engines.

In removing the intake valves from the head a suitable fixture is available which holds the valves closed and compresses the spring at the same time.

VALVES, GRIND

All Engines

In refacing valves, take off the minimum of metal required to clean up the valve faces. If the outer edge of the valve becomes too thin or sharp due to excessive grinding, the valve must be replaced.

Inspect the valve seats in the block and head for cracks, burns, pitting, ridges or improper angle. During any general engine overhaul it is advisable to reface the valve seats regardless of their condition. If new valve guides are required, they must be installed before refacing the seats if the equipment used has a valve guide pilot.

The valve seat width after refacing should measure not more than $\frac{5}{64}$ in. The width may be checked by placing a scale across the face of the seat.

A simple check can be made to prove the fit of the valve in the valve seat by spreading a thin film of Prussian Blue on the valve face and then inserting the valve into the valve seat. With hand pressure, rotate the valve $\frac{1}{4}$ turn and then remove it and observe the transfer of Prussian Blue to the valve seat. An uneven transfer of Prussian Blue will indicate an inaccurate valve and valve seat refacing operation.

VALVE SPRINGS

All Engines

After taking out the valves, remove the springs and wash them with gasoline or other suitable solvent. Examine the springs for damage or corrosion due to acid etching, which will develop into surface cracks and cause spring failure.

Check valve spring pressure on a spring testing fixture if one is available. If a fixture is not available, at least check the free length of each spring by standing it alongside a new spring. Any spring that does not conform to the pressure specifications given in the *Valve Data* chart within 10 per cent should be replaced. Likewise, any spring that stands shorter than the new spring used for comparison should be discarded.

VALVE GUIDES

All Engines

After the valves and springs have been removed, clean the valve guides with a wire brush, and clean the valves with a wire wheel brush, making sure that all carbon is removed from the top and bottom of the heads, as well as the gum which might have accumulated on the stems.

Check the clearance between the valve stems and guides carefully. Excessive clearance between the valve stem and guide will cause improper seating and burned valves. When there is too much clearance between intake valve stems and guides, there is a tendency to draw oil vapor through the guide on the suction stroke, causing excessive oil consumption, fouled spark plugs and poor low speed performance.

To check valve stem-to-guide clearance, take a new valve and place it in each valve guide and feel the clearance by moving the valve stem back and forth. If this check shows excessive clearance, it will be necessary to replace the valve guide. If the clearance is not excessive when checking with a new valve but is excessive when checked with the old valve, the old valve stem is worn and a new valve must be installed.

If it is necessary to replace the valve guides, the old guides can be driven out with a special driver which is available for the purpose. However, in lieu of the driver, the guides can be pulled out by using a suitable piece of pipe together with a long bolt and suitable washers.

When replacing the guides, maximum engine performance can only be secured when the guides are installed correctly, Figs. 7 and 8.

VALVE LIFTERS

All Engines

These lifters are of the mushroom type operating in guide holes cast in the block.

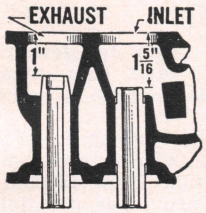

Fig. 7 Position of valve guides in 4-cyl. L-Head engines

This means that the camshaft will have to be removed from the engine if valve lifters require replacement.

Whenever the camshaft is removed, inspect the faces of the lifters where they contact the cams and replace any that are scored, rough or cracked. Check the clearance of the lifters in the guides, replacing those that have worn excessively. Oversize available is .004 in. and the guides must be reamed to accommodate them.

TIMING CASE COVER

4 Cyl. Engines

1. Drain cooling system.
2. Remove radiator and grille or guard.
3. Remove cylinder head, valves and springs.
4. On L-head engines, remove manifolds.
5. Remove fuel and oil pumps.
6. Remove oil pan.
7. Remove crankshaft pulley.
8. Remove fan assembly.
9. On CJ-2A and CJ-3A, remove nuts from front engine support.
10. Remove engine front cover.
11. Remove camshaft gear and thrust plate.
12. Tie valve lifters up to their highest point of travel with string wrapped around the adjusting screws and attach to manifold studs. Spring clip type clothespins or small "C" clamps may also be used.
13. On CJ-2A and CJ-3A, raise front of engine until camshaft will clear front crossmember.
14. Remove camshaft from engine.
15. To install, reverse foregoing procedure and set valve timing as shown in Fig. 9.

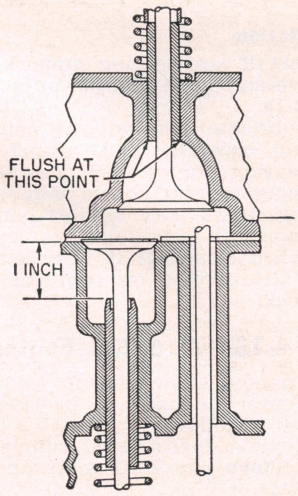

Fig. 8 Position of valve guides in 4-cyl. F-head engines

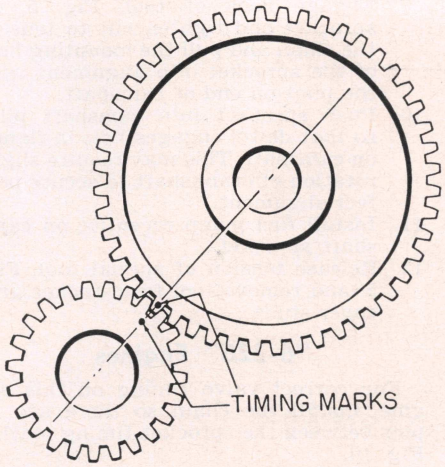

Fig. 9 Valve timing on four-cylinder engines

"6-226" Engines

1. Drain cooling system.
2. Remove radiator.
3. Remove vibration damper.
4. Remove timing chain cover.
5. Remove timing gears and chain.
6. Remove fuel pump.
7. Remove cylinder head.
8. Remove oil pan and oil pump.
9. Remove valves and springs.
10. Hold valve lifters up with spring type clothespins or string to prevent them from interfering with camshaft as it is being withdrawn.
11. Unfasten camshaft thrust plate from cylinder block and withdraw the camshaft.
12. To install, reverse removal procedure and set valve timing as shown in Fig. 10.

OHC 6-230 Engine

Removal

1. Remove hose clamps and hose from water port of chain cover.
2. Remove bolts that secure cover to front engine plate.
3. Remove cover, lifting eye and cover gaskets.
4. Slide oil slinger and oil pump drive gear from crankshaft.

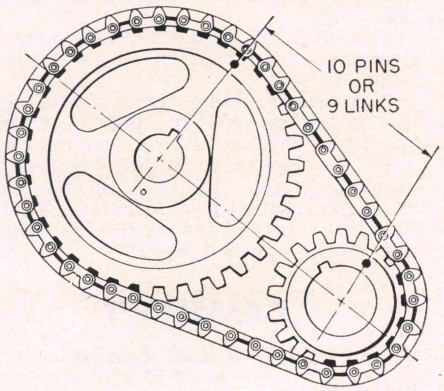

Fig. 10 Valve timing on 6-226 engine

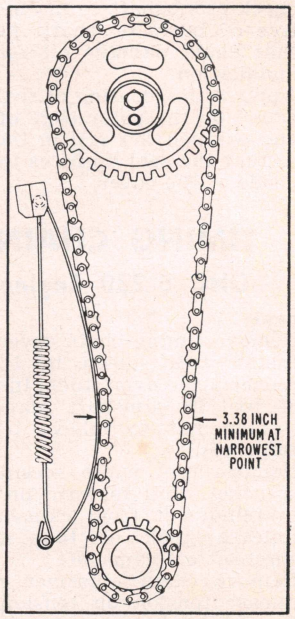

Fig. 11 Measurement for limit of timing chain wear. 6-230 engine

Installation

1. Apply a thin coat of gasket paste to both sides of cover gaskets and position gaskets on cover. Make sure Woodruff key, oil pump drive gear and oil slinger are installed on crankshaft.
2. Assemble sleeve and O-rings and install in oil port in cylinder block.
3. Lubricate oil pump push rod and install in chain cover.
4. Position chain cover on front engine plate and secure with bolts.
5. Be sure lifting eye is installed on upper right corner of front engine plate and generator brace on upper left of cover.

Front Oil Seal

1. After timing chain cover is installed,

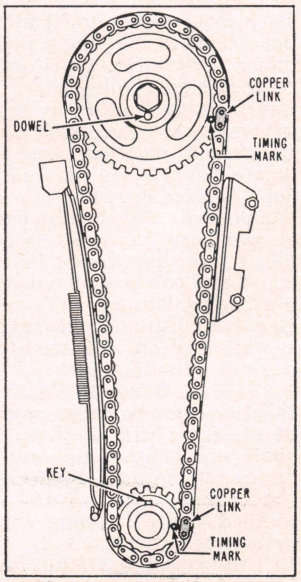

Fig. 12 Valve timing marks for 6-230 engine

check crankshaft to make sure it is free of burrs or sharp projections that could damage oil seal during installation.
2. Apply a thin coating of sealing compound on the outer edge of the seal and position the seal in the opening so that the seal lip faces toward the inside of the cover.

TIMING CHAIN

OHC 6-230 Engine

Removal

1. Remove timing chain cover.
2. Install tool shown in Fig. 5 on rocker arm cover studs. Install hook of tool in camshaft sprocket and tighten nut to relieve tension on camshaft.
3. Remove fuel pump eccentric from sprocket. Pull forward on sprocket to remove it from camshaft pilot.
4. Release hook of tool and slide sprocket off camshaft.
5. Remove chain tensioner spring to release tension on tensioner blade. Remove blade and spring from lower tensioner mounting stud.

Inspect Chain & Sprockets

Check the chain for excessive wear or stretch. When the chain is installed with the chain tensioner in place, measure the distance between the chain sides at the narrowest point, Fig. 11. If the distance is less than the required minimum as shown the chain must be replaced. If sprockets appear to be excessively worn, replace them also.

Timing Chain Tensioner

This device maintains a constant pressure against the chain to compensate for normal stretch and wear of the chain. Check the contact face of the tensioner blade to make sure the rubber facing material is not worn through. Replace if badly worn. Check the tensioner spring to make sure it is not distorted or elongated.

Install Chain & Sprockets

1. Turn over engine until air starts to blow from No. 1 spark plug port to indicate that No. 1 piston is on the compression stroke.
2. Continue to turn over engine until keyways in crankshaft are in the 12 o'clock position, which will indicate that No. 1 piston is at top dead center, Fig. 12.
3. Temporarily install camshaft sprocket and turn camshaft until nose of No. 1 cam and dowel hole on camshaft are pointing downward at the 6 o'clock position.
4. Remove camshaft sprocket.
5. Install key in crankshaft keyway nearest cylinder block.
6. Install tool shown in Fig. 5.
7. Position sprockets in opposite ends of chain so that keyway in crankshaft sprocket is up and dowel of camshaft is down. Position parts so that copper links of the chain are aligned with timing marks on sprockets.
8. Lift up assembled chain and sprockets and slide crankshaft sprocket on crankshaft so that camshaft is fully seated on camshaft.
9. Engage hook of tool, Fig. 5, on sprocket and tighten nut to tension the chain and pull the mounting hole of the sprocket into alignment with the pilot on end of camshaft.
10. Push sprocket into camshaft pilot so that dowel engages hole in flange on camshaft. This may require slight rotation of crankshaft to secure perfect alignment.
11. Install fuel pump eccentric on camshaft sprocket.
12. Release tension of special tool, Fig. 5, and remove tool from rocker arm cover studs.

"6-226" Engines

For correct valve timing on this engine, install the chain so there are 10 pins between the sprocket timing marks, Fig. 10.

TIMING GEARS

4-Cyl. Engines

The camshaft is driven by a steel gear on the crankshaft and a fibre gear on the camshaft. Lubrication is positive through a jet pressed into the crankcase directly back of the contact point of the gears. When the gears are removed, check both the jet and oil passage to make sure they are clear.

When it becomes necessary to replace the timing gears, due attention must be given to the end play of both shafts and running clearance of the gears.

End play of the crankshaft is controlled by the running clearance between the crankshaft gear and gear thrust plate. The end play is adjusted by shims placed between the thrust plate and the end of the front main bearing. Shims .002 in. thick are available for this adjustment. When the thrust plate or washer is removed, be sure it is reinstalled with the beveled inner edge toward the crankcase.

End play of the camshaft is determined by the running clearance between the camshaft gear and thrust plate. The standard clearance is .003 to .0055 in. which is determined by the thickness of the camshaft gear thrust plate spacer. Should a check indicate not enough clearance, place a thin shim between the thrust plate spacer and the shoulder on the camshaft. Clearance may be reduced by dressing off the spacer slightly. Whenever the spacer is installed, make sure that the beveled inner edge is toward the rear.

End play of both the camshaft and crankshaft can best be measured with a dial indicator.

Standard running clearance between the gears is .000 to .002 in., which should be checked with a dial indicator.

To set the valve timing, install the crankshaft gear followed by the camshaft gear with the camshaft positioned to allow installation with the timing gear marks meshed, Fig. 9.

CAMSHAFT

OHC 6-230 Engine

Removal

1. With cylinder head removed, lift rocker arm guide from cylinder head.
2. Check rocker arms to determine which do not have cam tension against them. *Turn these parallel to camshaft.*
3. Temporarily install camshaft sprocket on camshaft and rotate camshaft to release tension from remaining rocker arms. Turn these parallel to the camshaft also. Continue to do this until all rocker arms are out of engagement with the camshaft.
4. Remove two nuts that attach camshaft retainer to cam bearing support deck and remove retainer.
5. Pull forward on camshaft to remove it from cam bearing support deck.
6. Remove cam bearing support deck from cylinder head.

Inspection

Clean the camshaft thoroughly with a suitable solvent. Make sure all oil passages are free. Check the cams for scoring or wear. The cam face must be perfectly smooth throughout their contact areas. Runout of the camshaft, measured with a dial indicator at the intermediate bearing journals, must not exceed .0005".

Check the camshaft journal diameters with a micrometer. The specified diameters are as follows:

Front	1.9965-1.9975"
No. 2	1.8715-1.8725"
No. 3	1.7465-1.7475"
Rear	1.3715-1.3725"

Check the cam bearing support deck for cracks or distortion. Check the bearing surfaces of the cam deck for visible wear or scoring. Using a telescope gauge and micrometer, check the internal diameters of the cam bearing deck bearings as shown in Fig. 13. The specified diameters are as follows:

Front	1.9995-2.0005"
No. 2	1.8745-1.8755"
No. 3	1.7495-1.7505"
Rear	1.3745-1.3755"

Compare each journal diameter with the corresponding bearing diameter. If the bearings are defective or permit more than .004" running clearance, the cam bearing deck and/or the camshaft must be replaced, Fig. 14.

Installation

1. Install cam bearing support deck on cylinder head. Torque nuts to 15-20 ft-lb.
2. Lubricate bearing with engine oil and carefully slide camshaft into bearing support deck from the front, being careful not to damage bearings in support deck or journals on camshaft.
3. When camshaft is fully seated, install retainer on front of support deck.

4-134 & 6-226 Engines

To remove the camshaft, take off the gear cover as outlined previously and proceed as follows:

1. Remove fuel and oil pumps.
2. Remove camshaft gear and thrust plate.
3. Tie the valve lifters up at their highest point of travel with string wrapped around the adjusting screws

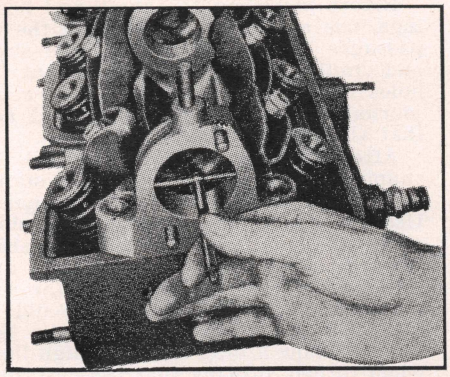

Fig. 13 Checking bearing diameter of cam bearing support deck. 6-230 engine

and attach to manifold studs.

4. Withdraw camshaft from engine and, if necessary, take lifters out from below.
5. Replace the parts in reverse order of removal.
6. When installing the oil pump on 4-cyl. engines, refer to the section covering the oil pump because the pump gear must be properly meshed with the driving gear on the camshaft to correctly couple with the distributor shaft to maintain ignition timing.

PISTONS & RODS, REMOVE

All Engines

After removing the cylinder head and oil pan, examine the cylinder bores above the ring travel area. If the bores are worn so that a shoulder or ridge exists at this point, remove the ridge with a ridge reamer to avoid damaging rings or cracking ring lands of pistons during removal.

Remove the connecting rod caps and push pistons and rods out of cylinders, using care to prevent rod bolts from contacting and nicking crankshaft journals.

Make sure the rods and pistons are properly numbered so they can be reinstalled in original locations. It is advisable to install caps on rods to avoid mixing parts.

PISTONS & RODS, ASSEMBLE

OHC 6-230 Engine

Assemble the piston to the connecting rod so that when installed in the cylinder the "F" side of the piston will face the front with the oil spurt hole in the rod toward the exhaust (right) side of the engine.

4-Cyl. Engines

As shown in Fig. 15, pistons should be assembled to the connecting rods so that the oil spray hole in the rod faces away from the camshaft side of the engine with the vertical slot in the piston facing the camshaft side.

6-226 Engine

When correctly assembled, the oil spray hole in the rod faces the camshaft side of the engine with the vertical slot in the piston facing away from the camshaft side.

PISTONS, REPLACE

All Engines

Standard size service pistons are high limit or maximum diameter; therefore, they can usually be used with a slight amount of honing to correct slight scoring or excessive clearances in engines having relatively low mileages. Service pistons are also furnished in .005, .010, .015, .020 and .030 in. oversizes.

Before a honing or boring operation is started, measure all new pistons with a micrometer at points exactly 90 degrees away from the piston pin. Then select the smallest piston for the first fitting. The slight variation usually found between pistons in a set may provide for correction in case the first piston is fitted too free.

It is very important that refinished cylinder bores are trued up to have not more than .0005 in. out-of-round or taper. Each bore must be final honed to remove all stone or cutter marks and provide a smooth surface. During final honing, each piston must be fitted individually to the bore in which it will be installed and should be marked to insure correct installation.

After final honing and before the piston is checked for fit, each bore must be thoroughly washed to remove all traces of abrasive and then dried thoroughly. The dry bore should then be brushed clean with a power-driven fibre brush.

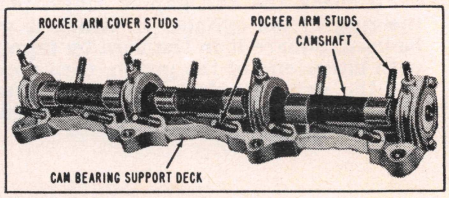

Fig. 14 Camshaft and cam bearing support deck

Both the piston and cylinder block must be at the same temperature (room temperature of 70 degrees) when the piston is checked for fit in the cylinder bore. Therefore the cylinder should be allowed to cool after boring or honing and before the piston fit is checked. This is important because a difference of 10 degrees between the temperature of parts is sufficient to produce a variation of .0005 in.

To check the fit of pistons use a feeler ribbon gauge ¾ in. wide (½" on 6-226 engine) and the thickness listed in the *Piston & Ring Data* chart. Insert the piston upside down in the cylinder bore with rings removed. Locate the feeler 90 degrees from the piston pin hole, between the thrust face of the piston and cylinder wall. Hook the feeler to a spring scale. If the force required to pull the feeler out of the cylinder with the scale is as specified in the chart, the piston fit is correct. If too tight, the cylinder must be honed out until the proper clearance is obtained.

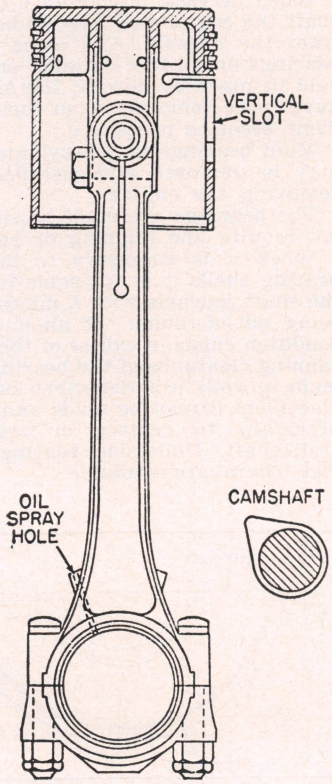

Fig. 15 Assemble pistons and rods as shown. 4 cyl. engines

PISTON RINGS, REPLACE

All Engines

When new piston rings are to be installed without reboring cylinders, the glazed cylinder walls should be slightly dulled, but without increasing the bore diameter. This is done with a "Glazebuster" or with a hone equipped with the finest grade of stones.

New piston rings must be checked for clearance in piston grooves and for gap in cylinder bores. Cylinder bores and piston grooves must be clean, dry and free of carbon and burrs.

Check the clearance of each ring in its piston groove by installing the ring and then inserting feeler gauges *under* the ring. Any wear that occurs in the piston groove forms a step or ridge at the inner portion of the lower land. If gauges are inserted above the ring, the ring may rest on the step instead of on the worn portion of the lower land, and a false measurement of clearance will result.

If the piston grooves have worn to the extent that relatively high steps or ridges exist on the lower lands, the piston should be replaced because the steps will interfere with the operation of the new rings and the ring clearances will be excessive. Piston rings are not furnished in oversize widths to compensate for ring groove wear.

See the *Piston & Ring Data* chart for ring groove clearances and end gap clearances.

To check the end gap of rings, place the ring in the cylinder in which it will be used. Square it in the bore by tapping with either end of the piston, then measure the gap with feeler gauges. If necessary to increase the gap, file the ends with a smooth file.

PISTON PINS, REPLACE

On 6-230 and 6-226 engines the pins are of the full floating type, being retained by snap rings which fit in grooves cut into the piston bosses.

On four cylinder engines, the pins are locked in the rods and are fitted with a clearance of .0001 to .0005 in. which is equivalent to a light thumb push fit with the parts at normal room temperature. No oversize pin is available as it is impossible to ream the connecting rod satisfactorily due to the clamp slot, and also because the piston plating should not be removed from the piston pin bore.

ROD BEARINGS, REPLACE

Insert type bearings consist of two half shells, the upper shell having an oil spray hole which communicates with the oil hole in the rod.

When the shells are placed in the rod and cap the ends extend slightly beyond the parting faces so that when the rod bolts are tightened the shells will be clamped tightly in place to insure positive seating and to prevent turning. *The ends of the shells must never be filed flush with the parting faces of the rod and cap.*

If this type bearing becomes noisy or is worn so that clearance on the crankpin is excessive, a new bearing of proper size must be selected and installed since no provision is made for adjustment. Under no circumstances should the rod or cap be filed to adjust bearing clearance.

Service bearings are furnished in standard sizes and several undersizes, including undersizes for reground crankshafts.

The clearances of connecting rod (and main) bearings may be checked with Plastigage which is available at any auto parts jobber and full instructions for its use are furnished with the envelope in which it is contained.

Lacking Plastigage, however, clearance may be checked with a .002 in. test shim, ¾ in. square. Place the shim between the bearing and shaft journal. Install the cap, tightening the nuts to the recommended torque. A locked bearing or drag when the rod is moved endwise on the crankshaft indicates the clearance is correct providing the rod moves endwise freely without the test shim installed. Do not overlook removing the shim.

The connecting rod nuts are locked with stamped nuts which should not be used when once removed. Install the new nuts with the flat face toward the connecting rod nut. Turn the locking nut finger tight and then tighten it only a half-turn more.

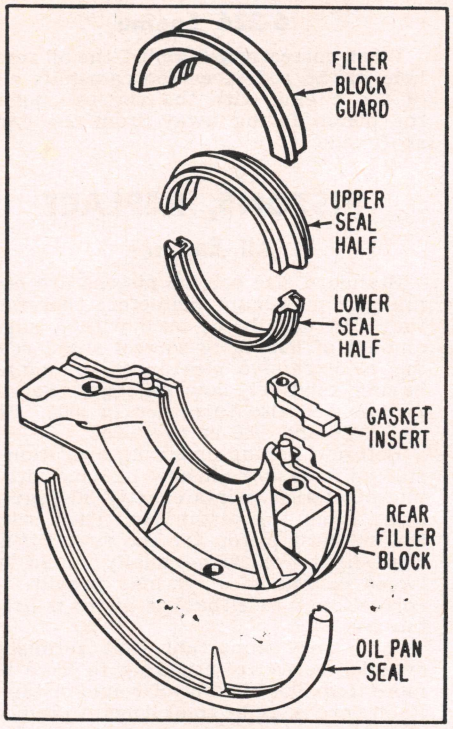

Fig. 16 Crankshaft rear oil seal disassembled. 6-230 engine

MAIN BEARINGS, REPLACE

All Engines

When necessary to remove the crankshaft the engine will have to be removed from the chassis. And since the main bearings on all four-cylinder engines are held in place by dowels, the engine will have to be removed when their replacement becomes necessary.

Main bearings on six-cylinder engines may be removed and installed without removing the engine.

The bearings are made to size and do not require line reaming or adjustment.

When it is necessary to install new bearing shells it is advisable to measure the shaft journals with a micrometer for being out-of-round. If an out-of-round condition exists in excess of the standard running clearance of the bearings (either main or rod) a satisfactory bearing replacement cannot be made and it will be necessary to replace or regrind the crankshaft. Undersize bearings of .010 and .020 in. are available.

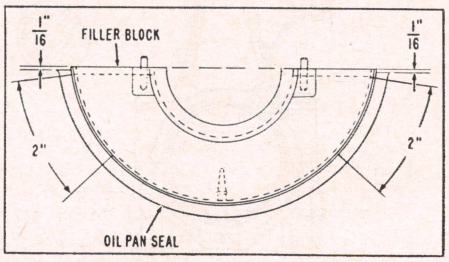

Fig. 17 Oil pan seal assembled to rear filler block. 6-230 engine

Before installing the shaft and bearings, use a rifle brush to clean the oil passages thoroughly in both the shaft and crankcase. If possible, blow out the holes with compressed air. Be sure the journals are not nicked or scored and that all parts are thoroughly clean.

After installing the bearings, check the running clearance to be sure it is standard (see *Engine Bearing Data* chart). Use Plastigage or a .002 in. test shim about one inch square. Place the shim between the shaft and bearing and tighten the bearing cap nuts to the recommended torque. The shaft should be locked if the clearance is at the low limit or show a drag if at the high limit when turned, proving that the clearance is correct. Do not overlook removing the test shim.

CRANKSHAFT OIL SEAL

4 Cyl. Engines

The rear main bearing is sealed against external leakage by a lip type neoprene seal with a metal core. The seal has the advantage of being able to be slipped into place without removing the crankshaft.

For easy installation, give the seal a coat of grease. Be careful not to coat the ends of the seal as they have sealing compound applied to them.

OHC 6-230 Engine

The rear end of the crankshaft is sealed against oil leaks by a seal consisting of the parts shown in Fig. 16. The filler block guard is mounted in a recess in the cylinder block.

Before installing a new seal, clean the filler block thoroughly. Remove the oil pan seal and cement used to attach it. Check the dowel pins to make sure they are straight and tight.

To replace the oil pan seal, coat the pan seal groove in the filler block with 3M Super Weatherstrip Adhesive or equivalent for a distance of 2″ from each end, Fig. 17. Also coat the pan seal ends for a distance of 2″.

Insert the nipple of the pan seal into the hole in the bottom of the filler block. Press the ends into engagement with the cemented portion. When in position, the ends of the pan seal should be $\frac{1}{16}$″ below the top of the filler block as shown in Fig. 17. Allow the adhesive to dry before assembly to the engine.

OIL PUMP REPAIRS

4-134 & 6-230 Engines

The oil pump is located externally on the left side of the engine. When necessary to remove the pump, first take off the distributor cap and note the position of the rotor so that the pump may be reinstalled without disturbing the ignition timing.

To install the pump without disturbing the timing, the pump gear must be correctly meshed with the camshaft driving gear to allow engagement of the driving key on the distributor shaft in the pump shaft driving slot without moving the distributor rotor. Assembly can be made only in one position because the slot and

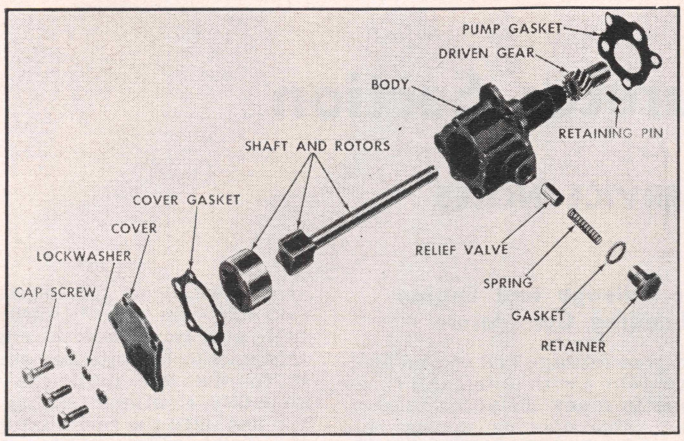

Fig. 18 Oil pump. 4-134 and 6-230 engines

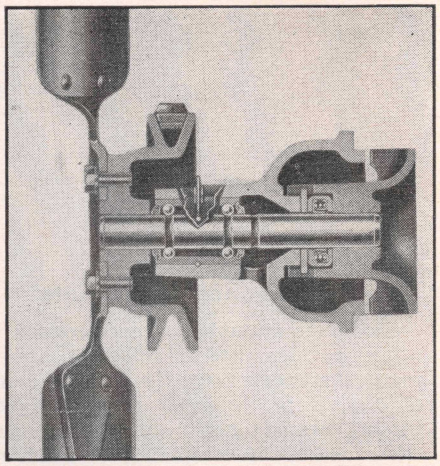

Fig. 19 Water pump. All engines

driving key are machined off center.

To disassemble the pump, Fig. 18, remove the cover and gasket. Hold a hand over the cover opening and, with the pump upside down, turn the shaft until the outer rotor slips out. Drive out the pin securing the drive gear to the shaft. Press the shaft out of the gear and slide the shaft and inner rotor out of the body.

Failure of the pump to operate at full efficiency may usually be traced to excessive end play in the rotor or excessive clearance between the rotors. The clearance between the outer rotor and pump body should also be checked.

End play of the rotors is controlled by the thickness of the cover gasket which is made of special material which can only be slightly compressed. Never use other than a standard factory gasket.

6-226 Engine

The oil pump is of the positive gear type, located at the bottom of the vertical shaft which also drives the distributor.

To disassemble the oil pump, take off the screen float. Drive out the pin which secures the drive gear to the shaft and take off the gear. Remove pump cover and gasket. Position the pump with the drive shaft end up and allow the gears to drop from the pump body. Do not remove the idler gear shaft unless worn or damaged.

Assemble the pump with new parts, using a new gasket. When replacing the upper drive gear, position it on the shaft and use a feeler gauge to measure clearance between gear and end of pump body, allowing a clearance of .002 to .004". When proper clearance has been obtained, drill a $\frac{3}{16}$" pin hole through the drive shaft, install the pin and peen it securely.

WATER PUMP, REPLACE

All Engines

Remove the fan belt and blades, unfasten the pump from the cylnder block and lift it off. On some models, it may be necessary to loosen the radiator core and pull it forward in order to remove the water pump assembly.

WATER PUMP REPAIRS

All Engines

To disassemble the pump, Fig. 19, take out the bearing retaining wire and press the shaft through the impeller and pump body. Remove the seal washer and seal. Place the pump shaft and fan pulley on the press in such a position that the bearing will clear the opening and press the shaft from the pulley.

To reassemble the pump, install the long end of the shaft in the pump body from the front end until the outer end of the bearing is flush with the front end of the pump body.

Dip the seal and seal washer in brake fluid and install in the impeller. Place the impeller on the bed of the press and press the long end of the shaft into the impeller until the end of the shaft is flush with the impeller.

Support the assembly on the impeller end of the shaft and press the fan pulley on the shaft so that the end of the shaft is flush with the face of the fan pulley. Move the shaft in the body so that the grooves in the bearing and pump body line up, then lock in position with the bearing retaining wire.

DISTRIBUTOR, REPLACE

4-134 & 6-230 Engines

The distributor is mounted on the right side of the engine and is operated by a coupling on the oil pump shaft which is driven by a spiral gear on the camshaft.

1. Remove wires from the distributor cap, noting the order in which they are assembled to assure correct reassembly.
2. Remove primary lead from terminal post at side of distributor.
3. Disconnect vacuum tube.
4. Remove distributor cap.
5. Note position of rotor in relation to the distributor housing. Mark housing to facilitate installing and timing.
6. Remove screw holding distributor to crankcase and lift unit from engine.
7. Reinstall in the reverse order of removal and set the timing as outlined below.

"6-226" Engines

To remove the distributor, disconnect the vacuum tube and low tension wire and remove distributor cap. Remove bolt and washer that holds advance arm to adapter and lift out distributor. Install the distributor in the reverse order of removal and set the ignition timing as outlined below.

IGNITION TIMING

If a timing light is to be used to set ignition timing, disconnect the vacuum advance pipe to the carburetor and place a piece of tape over open end of pipe. *This is important as carburetor trouble can affect timing adjustments.*

Lacking a power timing light, an accurate method of setting ignition timing with the engine stopped is with the aid of a jumper light. Be sure to use a light bulb that corresponds with the system voltage of the vehicle.

1. Remove distributor cap and rotor and see that the breaker gap is set according to specifications.
2. Rotate engine until No. 1 cylinder is at the ignition timing point as indicated by the timing pointer and timing mark being lined up with each other.
3. Connect the jumper light between distributor ignition terminal and ground.
4. Turn on ignition switch.
5. Loosen distributor and turn it in the direction of normal rotation until the points just close (light out). Then slowly turn distributor in the opposite direction just to the exact point that the light goes on. Tighten distributor in this position.

Carburetor Section

SERVICE NOTES

Performance Complaints

Flooding, stumble on acceleration or other performance complaints are in many instances caused by the presence of dirt, water or other foreign matter in the carburetor. To aid in diagnosing the cause of the complaint, the carburetor should be carefully removed from the engine without draining the fuel from the bowl. The contents of the fuel bowl may then be examined for contamination as the carburetor is disassembled.

Check the fuel in the bowl for contamination by dirt, water, gum or other foreign matter. A magnet moved through the fuel in the bowl will pick up and identify any iron oxide dust that may have caused intake needle and seat leakage.

Inspect gasketed surfaces between body and air horn. Small nicks or burrs should be smoothed down to eliminate air or fuel leakage. On carburetors having a vacuum piston, be especially particular when inspecting the top surface of the inner wall of the bowl around the vacuum piston passage. A poor seal at this location may contribute to "cutting-out on turns" complaint.

Fill the carburetor bowl with clean fuel before installing on manifold. This will help prevent dirt trapped in the fuel system from being dislodged by the free flow of fuel as the carburetor is primed. The operation of the floats and intake needle and seats may be checked under pressure if the fuel pump is used at the bench to fill the carburetor bowl. Operate the throttle several times and visually check the discharge of the pump jets.

Poor Mileage and Engine Loading Complaints

Cases of poor mileage and engine loading on carburetors with automatic choke may be due in many instances to sluggish choke valve opening during cold driveaway, caused by insufficient vacuum in choke housing, a plugged or restricted heat pipe or inlet in choke cover. To check for this condition, have engine warm and running at slow idle. Remove choke heat pipe and hold a finger over the heat inlet hole (hole is on choke housing on some carburetors). If there is little or no vacuum pull on the finger, check the choke housing for gasket leaks or plugged vacuum passages. If these are OK, check choke vacuum passages in carburetor between choke housing and manifold.

Dirty or Rusty Automatic Choke Housing

In cases where it is found that the interior of the choke housing is dirty, gummed or rusty while the carburetor itself is comparatively clean, look for a punctured or eroded manifold heat tube (if one is used).

Idle Speed & Mixture Adjustments

The initial setting of the idle mixture screw (or screws) is listed in the carburetor charts. Turn the screw clockwise by hand until it just contacts its seat lightly. Then turn it out the number of turns listed. Start the engine and run it until it reaches normal operating temperature, at which time the choke valve should be wide open with the idle speed screw resting on the lowest step of the fast idle cam. Slowly turn the screw a little at a time until the engine shows a tendency to hesitate and stall. Then turn it to the left until the engine runs smoothly. Continue turning the screw to the left until the fuel mixture is rich and the engine starts to "lope" or "gallop". Finally turn the screw to the right until the engine runs evenly.

On two-barrel carburetors, there is an idle mixture screw for each barrel. When adjusting the idle mixture on two-barrel carburetors, adjust one screw at a time until the engine runs smoothly as directed above. Then adjust the other screw in like manner.

After the idle mixture has been adjusted, it is recommended that a tachometer (engine speed indicator) be used to adjust the slow idle speed to the rpm listed in the *Tune Up Chart*. If a tachometer is not available, adjust the idle speed screw until the engine runs smoothly without racing. If the car has an automatic transmission, place the shift lever in Drive range with hand brake off. Then very slowly increase engine speed until the car begins to creep, then back off slightly until creeping is eliminated.

Choke Thermostat Setting

If necessary to adjust the choke more than two marks from the specified setting, either rich or lean, it indicates that the thermostat spring may be bent or has lost its tension.

Carter Float Settings

When replacing a solid float needle and seat with the new resilient seat, the float setting should be reduced $\frac{1}{32}$" on WCD and WGD carburetors.

CARTER CARBURETOR ADJUSTMENTS

Year	Carburetor Model	Float Level	Float Drop	Idle Screw Turns Open	Pump Travel Setting	Fast Idle Setting	Choke Unloader Setting	Choke Setting
1956–63	YF-2467S	9/32 (1)	1 1/4 (2)	1 — 2 1/2	(3)	(4)	None	None
1956–63	YF-2392S	9/32 (1)	None	1/2 — 2	None	(4)	None	None
1954–63	WCD-2204S	3/16 (5)	None	1 — 2	11/32 (6)	.016 (7)	1/8 (8)	Index
1954–55	WGD-2052S	(9)	None	1/2 — 1 1/2	1/2 (10)	.020 (11)	9/64 (12)	2 Rich
1954–55	WGD-2052SA	(9)	None	1/2 — 1 1/2	1/2 (10)	.020 (11)	9/64 (12)	Index
1953–63	YF-938S,SA	5/16 (1)	None	3/4 — 1 3/4	None	(4)	None	None
1953–63	YF-951S	5/16 (1)	None	3/4 — 1 3/4	None	(4)	None	None

CARTER NOTES

METERING ROD

YF—This adjustment must be checked after adjusting pump and each time the carburetor is reassembled. With throttle valve closed, press down on upper end of diaphragm shaft until diaphragm bottoms in vacuum chamber. Metering rod should contact bottom of metering rod well and metering rod arm should contact lifter link at outer end nearest springs and at supporting lug. Adjust by bending lip of metering rod arm to which metering rod is attached.

WGD and WCD—This adjustment must be made after pump adjustment. With throttle valves closed, press down on vacumeter link until metering rods bottom. With rods held down, revolve metering rod arm until lip contacts vacumeter link. Hold in place and tighten set screw.

CARTER NOTES Continued

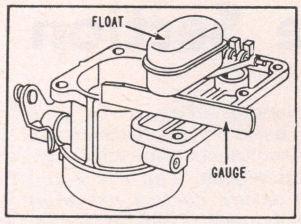

Fig. ①—YF float level.

②—With bowl cover held upright, distance between free end of float and bowl cover should be as listed. Adjust by bending stop tabs on float arm.

③—With throttle valve closed, press down on upper end of diaphragm shaft until it reaches bottom. Metering rod arm should now contact pump lifter link at outer end and nearest springs. Adjust by bending pump connector link at lower angle.

④—With choke held wide open, lip of fast idle cam should contact boss on body casting. Adjust by bending at offset portion of choke connector link.

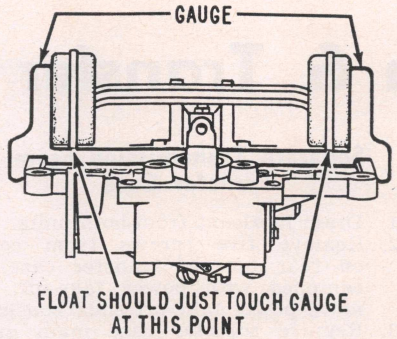

Fig. ⑤—WCD float level.

⑥—With throttle valves closed, distance from top of plunger shaft to top of dust cover boss should be as listed. Adjust by bending throttle connector rod.

⑦—With choke valve closed, tighten fast idle screw on high step of fast idle cam until the clearance listed exists between throttle valve and carburetor bore.

⑧—With throttle wide open, there should be the clearance listed between upper edge of choke valve and inner wall of air horn. Adjust by bending unloader lip on throttle shaft lever.

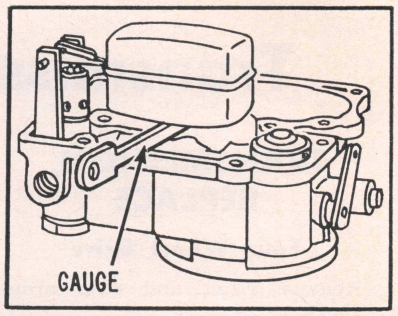

Fig. ⑨—WGD float level. With solid needle $\frac{9}{32}$", with spring loaded needle $\frac{7}{32}$".

⑩—With throttle valves closed, distance from dust cover boss to top of plunger shaft should be as listed. Adjust by bending throttle connector rod.

⑪—Hold choke valve closed, then close throttle. There should now be the clearance listed between throttle valve and carburetor bore. Adjust by bending choke connector rod.

⑫—With throttle valves wide open, close choke valve as far as possible without forcing. There should now be the clearance listed between upper edge of choke valve and inner wall of air horn. Adjust by bending arm on choke trip lever.

①—Wet Fuel Level: Remove the fuel level check plug from the side of the float bowl. With the engine running at idle speed, the fuel level should be within 1/16" of the bottom line of the check plug port. To adjust the level, loosen the lock screw on the bowl cover and turn the adjusting nut clockwise to lower the fuel level and counterclockwise to raise the level. One-sixth of a turn will change fuel level about 1/16".

②—Pump Override Spring: With throttle held in wide open position and pump operating lever and pin held in fully compressed position, check the clearance between the adjusting nut and the arm of the pump operating lever. The clearance should be as listed.

HOLLEY CARBURETOR ADJUSTMENTS

Year	Engine Model	Carb. Model	Idle Screws Turns Open	Fuel Level	Pump Override Spring
1963	6-230	2300	1	①	.015②

Clutch Section

AUBURN & ROCKFORD

Both of these clutches are of the single plate dry disc type and both have an 8½" driven plate. The driven plates are built with spring center vibration neutralizers and have two flexible facings which provide smooth engagement of the engine power. Both clutches have approximately the same torque capacity and total plate pressure and use the same driven plate and release bearing.

Clutch Pedal, Adjust

As the clutch facings wear the free pedal travel diminishes. When sufficient wear occurs to cause the pedal to rest against the toe board it is necessary to adjust the free travel.

The free pedal travel, which should be 1½", is adjusted by lengthening or shortening the clutch control lever cable. Loosen the clutch control lever cable adjusting yoke lock nut. Unscrew the cable with a wrench and tighten the lock nut.

Clutch Assembly, Replace

To remove the clutch, follow the procedure outlined in the transmission section for the removal of the transmission or transmission and transfer case from the vehicle.

Note that labor will be saved when removing the clutch from four-wheel drive models equipped with a transfer case if the engine is removed from the chassis without the bell housing.

Remove the transmission and bell housing from vehicles not equipped with a transfer case. Then remove the clutch from the flywheel.

If the same clutch is to be reinstalled, mark both the pressure plate and flywheel so that the assembly may be installed in the same position.

Install the clutch in the reverse order of its removal and adjust the clutch control cable to establish the proper free pedal travel.

Transmission & Transfer Case Section

TRANSMISSION, REPLACE

Four Wheel Drive

1. Remove front and rear propeller shafts.
2. If vehicle is equipped with a power take-off, disconnect transfer case end of power take-off drive shaft.
3. Disconnect speedometer cable at transfer case.
4. Disconnect brake cable.
5. Support transmission and engine with jacks.
6. Remove nuts holding rear mounting to frame crossmember.
7. Remove transfer case snubbing rubber bolt nut at crossmember.
8. Remove shift lever or remote control rods.
9. Disconnect clutch release cable at bell crank at yoke end.
10. Remove floor board inspection plate.
11. Remove transfer case shift lever pivot pin screw.
12. Remove transfer case shift lever pivot pin and remove levers. If vehicle is equipped with power take-off, remove shift lever plate screws and lift out lever.
13. Remove frame center crossmember.
14. Remove bolts holding transmission to bell housing.
15. Force transmission to right to disengage clutch control lever tube ball joint.
16. Lower jacks under engine and transmission and slide transmission and transfer case toward rear of vehicle until clutch shaft clears bell housing.

Separate Transmission From Transfer Case

1. Drain lubricant from both units.
2. Remove five screws from cover on rear face of transfer case (if equipped with power take-off, remove power take-off shift housing).
3. Remove transfer case main drive gear from rear end of transmission mainshaft.
4. Remove shift tower from transmission.
5. In the absence of a transmission mainshaft retaining plate, loop a piece of wire around the mainshaft just back of the second speed gear, twist the wire and attach one end to right hand front cover screw and the other end to left hand cover screw.
6. Draw wire tightly to prevent mainshaft from pulling out of transmission case when transfer case is removed.
7. Separate the two housings, using care to see that the transmission mainshaft bearing, which bears in both housings, remains in the transmission case.
8. Reverse the removal procedure to attach the transmission to the transfer case and install the assembly in the vehicle.

Two-Wheel Drive

The following outline covers removal of transmission and overdrive. If not so equipped, disregard operations pertaining to overdrive.

1. Disconnect remote control rods at transmission.
2. Disconnect two wires from overdrive solenoid. *Tag wires and terminals to assure correct assembly.*
3. Disconnect two wires at overdrive rail switch. *Tag wires and terminals to assure correct assembly.*
4. Disconnect front universal joint, and speedometer cable at transmission. Have available an ordinary cork of correct size to close cable opening to prevent leakage of lubricant.
5. Disconnect overdrive control cable and conduit.
6. Remove rubber mounted saddle support at rear end of overdrive. Use care not to lose spacers. Remove overdrive.
7. Place jack under flywheel bell housing and raise it to support weight of housing.
8. Remove frame cross member with rubber insulators attached.
9. Place jack under engine to support engine when transmission is removed.
10. Thread out four screws attaching transmission to bell housing as far as possible and yet support weight of transmission. Pull transmission back to bolt heads which will provide approximately ¾" opening between the two housings and at the same time relieve pressure on clutch release fork in bell housing.
11. Use a long screwdriver through opening in side of bell housing to pry clutch release fork from engagement with clutch release bearing carrier.
12. Complete removal of four transmission attaching screws and pull transmission back until clutch shaft clears bell housing and remove the assembly with release bearing carrier attached.

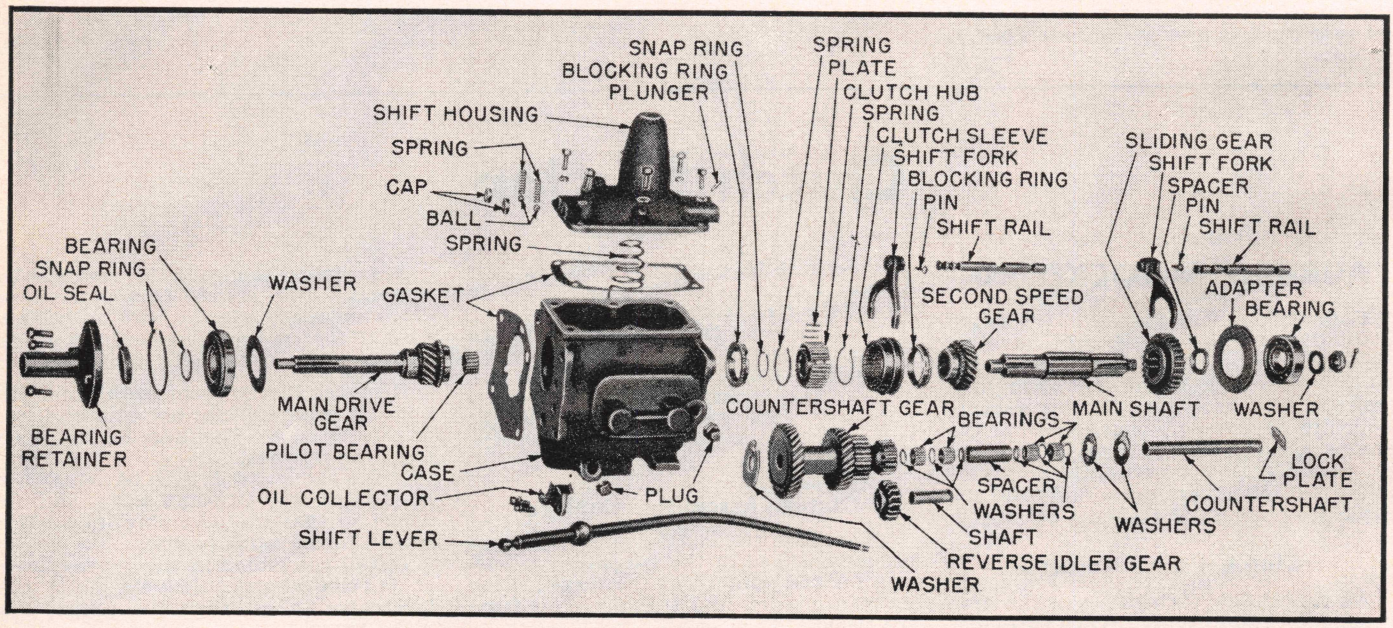

Fig. 1 Transmission. All 4-wheel drive models

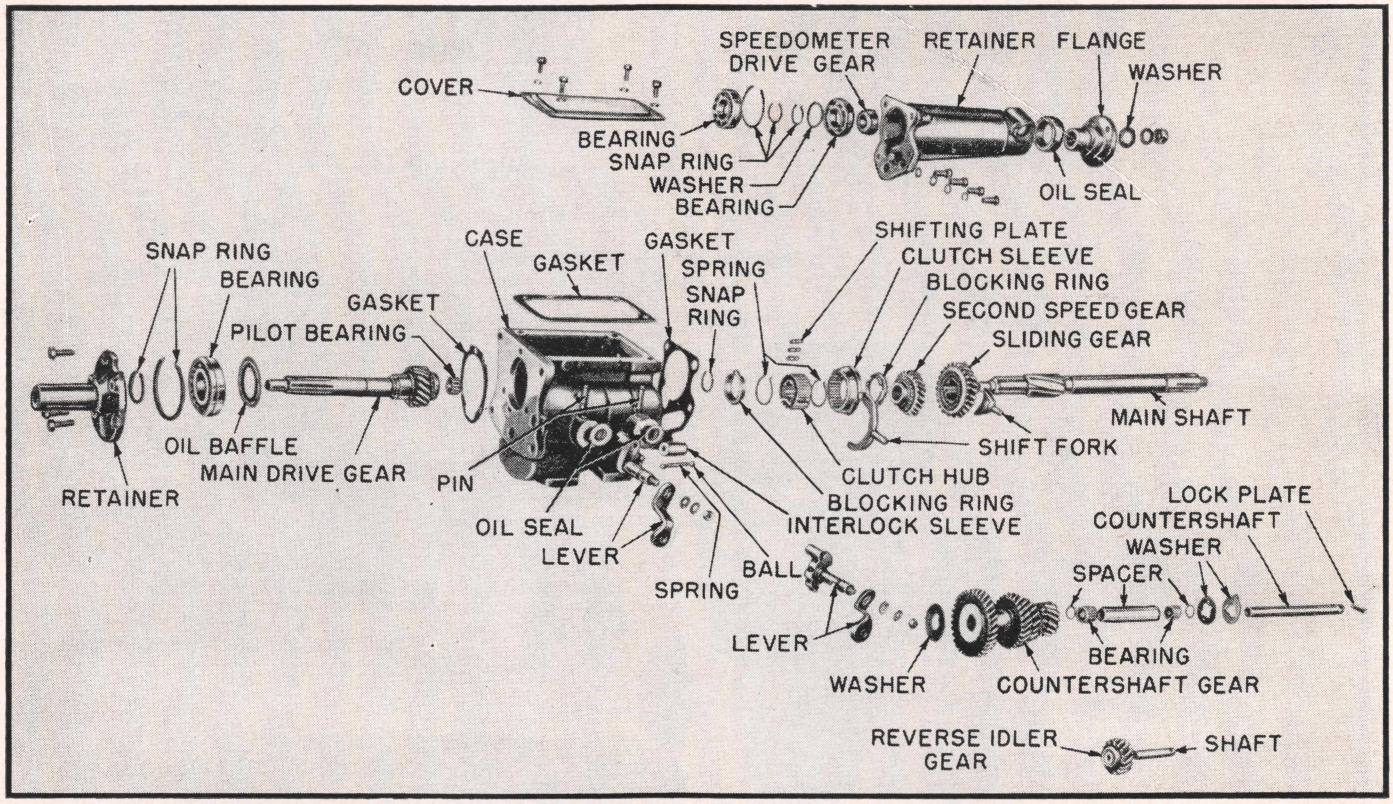

Fig. 2 Transmission. Two-wheel drive models

TRANSMISSION REPAIRS

Four Wheel Drive, Fig. 1

1. Drain lubricant from case and clean case with a suitable solvent.
2. If transfer case is attached, remove its rear cover.
3. If equipped with a power take-off, remove the shift unit which replaces the cover.
4. Remove transfer case main drive gear.
5. Remove transmission cover.
6. Loop a piece of wire around mainshaft directly back of mainshaft second speed gear. Twist wire and attach one end to right hand front cover screw and other end to left front screw. Draw wire tightly to prevent mainshaft from pulling out of transmission case when transfer case is removed. Should mainshaft come out, synchronizer parts will drop into bottom of case.
7. Support transfer case and with a rawhide mallet or brass drift and hammer, tap lightly on end of transmission mainshaft to separate the two units. The transmission mainshaft bearing should slide out of transfer case and remain in transmission.
8. Remove drive gear bearing retainer.
9. Remove lock plate and drive countershaft out through rear.
10. Remove mainshaft rear bearing adapter.
11. Remove mainshaft and gear assembly through transfer case opening.
12. Remove countershaft gearset and thrust washers, noting position of washers.
13. Drive reverse idler shaft out rearward and lift out gear.

Assembly Notes

Reverse the order of the above procedure to assemble the transmission, being sure to observe the following precautions:

The countershaft gearset should have from .012″ to .018″ end play when assembled in the case. This clearance is obtained by selective thickness of the rear steel thrust washer, which is available in two thicknesses. Assemble the larger bronze washer at the front of the case with the lip entered in the slot in the case. The bronze faced steel washer goes next to the gear at the rear end, and the steel washer next to the case. Use a loading sleeve to assemble the countershaft roller bearings.

Two Wheel Drive, Fig. 2

1. Remove cover, front flange and snap rings from pinion bearing.
2. Use puller to remove pinion bearing, using a suitable synchronizer ring protector to take up the thrust and prevent possible damage to the synchronizer.
3. Pull off the companion flange, remove the rear bearing retainer and oil seal, and slide the speedometer drive gear off the shaft.
4. Mark the synchronizer blocker rings, gear and sleeve so that these parts may be reassembled in their original position.
5. Raise the drive pinion over the countershaft gear, pull the mainshaft and bearing rearward and remove the drive gear from the case.
6. Cock the mainshaft to the side as far as possible, disengage and remove the shift forks.
7. Release the mainshaft front snap ring. Grasp the mainshaft parts and slide the shaft through these parts and out through the rear.
8. Remove the lock plate and drive the countershaft out rearward.
9. Lift out the cluster gear and washers, noting the position of these parts.
10. Drive out the shaft and lift out the reverse idler gear.
11. Remove the shift shaft locating pins and take out the shift levers and shafts and oil seals.
12. Assembly may be made in the reverse order, being sure to use new gaskets and oil seals.

TRANSFER CASE

Four Wheel Drive, Fig. 3

In removing the transfer case, follow the procedure outlined under transmission removal. Then dismantle the case as follows:

1. Remove propeller shaft flange, brake assembly and linkage.
2. Remove lower cover.
3. Remove lock plate.
4. Drive intermediate shaft to rear of

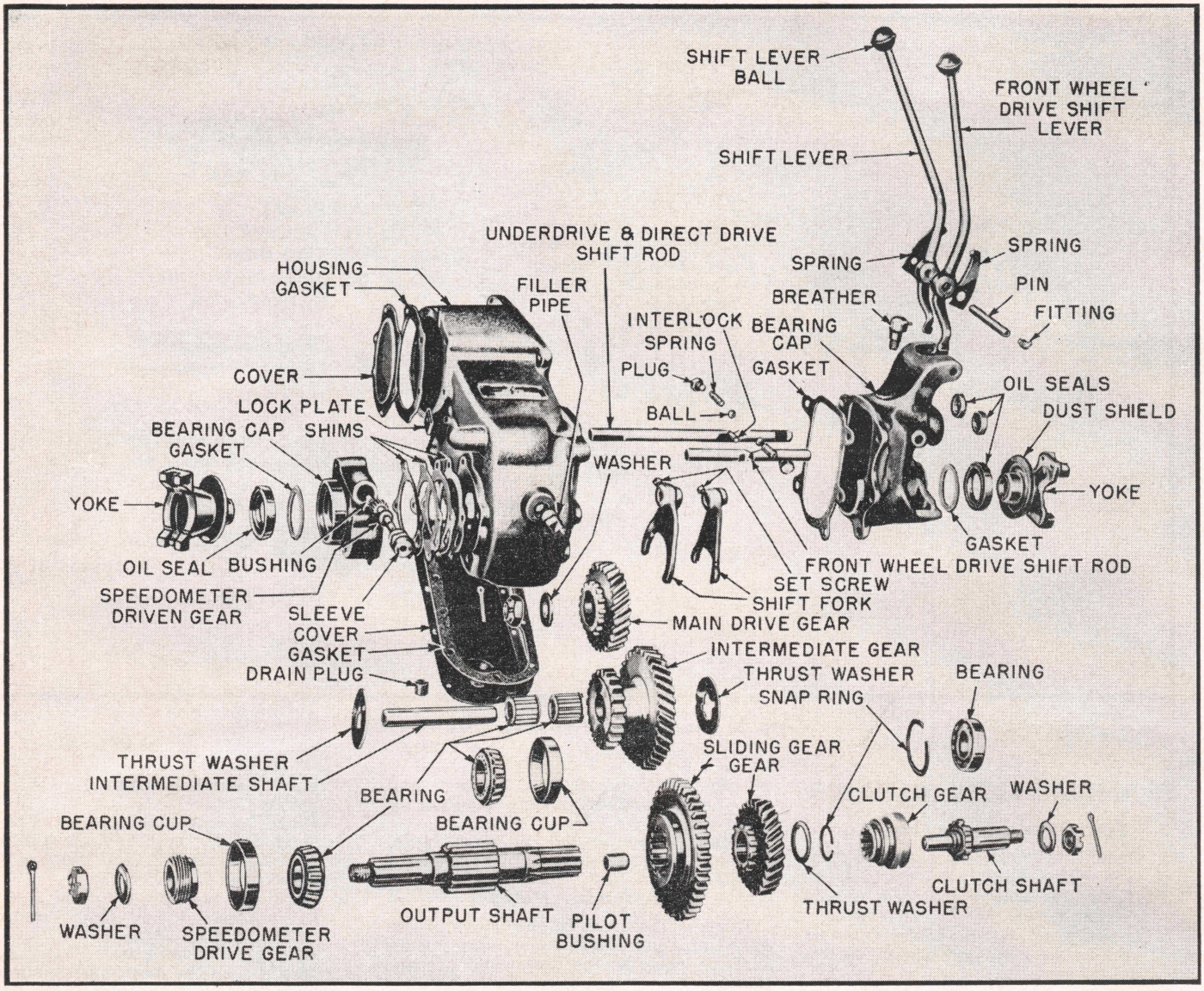

Fig. 3 Transfer case for four-wheel drive models

case, being careful not to lose thrust washers.

5. Remove intermediate gear, thrust washers and roller bearings through bottom of case.
6. Shift front wheel drive to engaged position (shaft forward) and remove poppet plugs, springs and balls on both sides of output bearing cap.
7. Remove output bearing cap together with the universal joint end yoke, clutch shaft, bearing, clutch gear, fork and shift rod. Use care not to lose the interlock.
8. Remove output shaft snap ring and thrust washer.
9. Use a rawhide mallet to drive against the front end of the mainshaft to start the rear bearing from the case. As the shaft is removed, the gears will remain in the case and can be taken out through the bottom, also the snap ring and thrust washer.
10. Remove set screw in sliding gear shift fork and take out the shift rod.
11. Disassemble the front and rear bearing caps as required.

Assembly Notes

Reverse the order of the above procedure to assemble the transfer case. But when rear bearing cap assembly is installed, check the end movement of the mainshaft which determines the adjustment of the tapered roller bearings. For correct bearing adjustment, the shaft should have from .004″ to .008″ end play. Adjustment is made by selective shim installation between the cap and case. Shims .003″, .010″ and .031″ thicknesses are available for this adjustment. Do not install the rear cap oil seal until the bearings are properly adjusted.

"Live" Front & Rear Axle Section

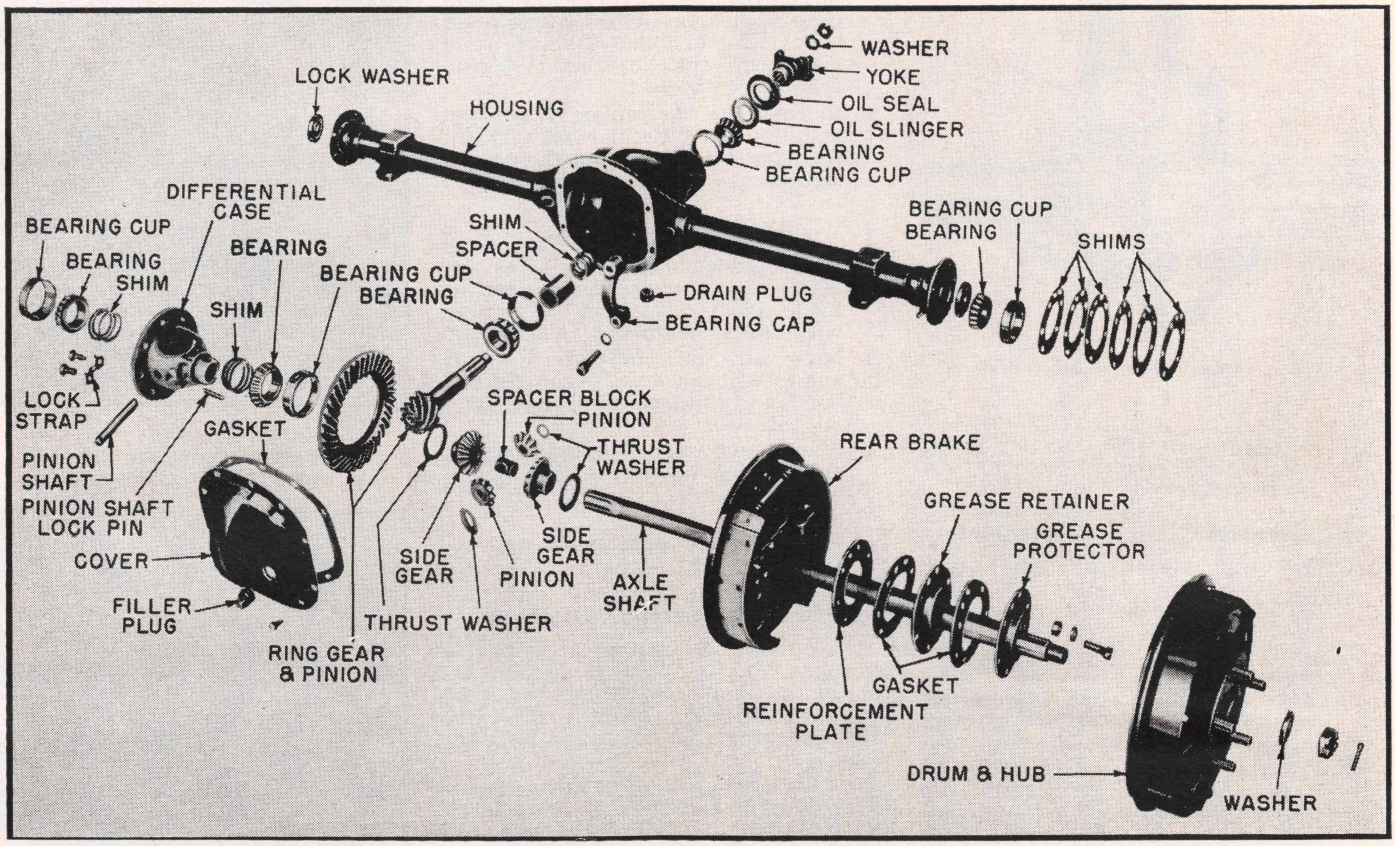

Fig. 1 Spicer single reduction axle with one-piece banjo type housing

SPICER

One-Piece Housing Type, Fig. 1

This rear axle, is of the semi-floating, hotchkiss drive type. The drive pinion is the over-hung type, mounted on pre-loaded taper roller bearings. Sealing of the pinion shaft is accomplished at the front end by a spring-loaded leather seal bearing on the companion flange, which is splined and secured to the pinion shaft by a nut.

Axle Shaft, Remove

To remove an axle shaft, jack up the wheel and pull off the hub and brake drum. Block the brake pedal in such a manner that it cannot be depressed. Disconnect the hydraulic brake line from the wheel cylinder. Remove the mounting screws and take off the outer oil seal, shims and brake support. The shaft and bearing may then be pulled out of the housing. The inner oil seal may be removed at this time.

Axle Shaft, Install

Replace the shaft and bearings in the reverse order. If the old parts are replaced and the shims have not been disturbed, the end play should be correct when the parts are assembled. However, if a new axle shaft, bearing, differential carrier or housing has been installed, it will be necessary to check the end play.

Axle Shaft End Play, Adjust

Axle shaft end play can be checked when all parts have been replaced except the wheel and hub. To make the check, rap each axle shaft after the nuts are tight to be sure the bearing cups are seated. Then mount a dial indicator on the axle housing with its contact button touching the end of the shaft. Work the shaft in and out by hand and note the reading on the indicator. If an adjustment is necessary, remove the oil seal and brake support and add or remove shims as required to bring the end play to .001" to .005".

When making this adjustment, an equal thickness of shims should be removed or added on each side of the axle housing to maintain the central position of the axle shafts.

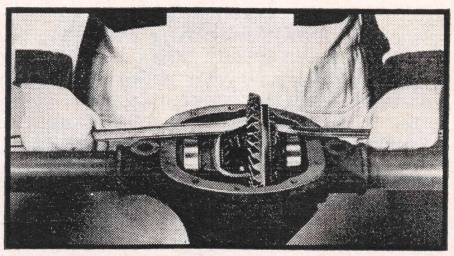

Fig. 2 Prying differential from housing

Rear Axle Assembly, Replace

Inasmuch as the axle tubes are pressed into the differential carrier to form a one-piece housing, the rear axle assembly must be removed from the chassis when it becomes necessary to overhaul the unit.

1. Raise vehicle from floor and support with stand jacks under frame side rails.
2. Remove rear wheels.
3. Split rear universal joint.
4. Disconnect parking brake cable (if equipped) from operating lever and from brake backing plates.
5. Disconnect hydraulic brake line connection at rear axle housing.
6. Loosen and move shock absorbers out of the way.
7. While supporting axle housing with hydraulic jack, remove spring clips and lower axle assembly to the floor.
8. Reverse the foregoing procedure to

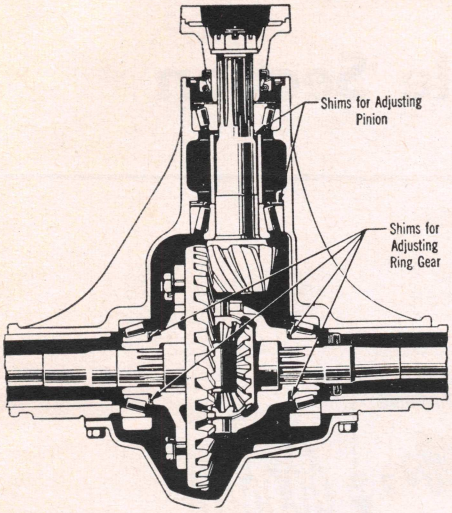

Fig. 3 Adjustments on Spicer axle

install the rear axle assembly, being sure to bleed the brake system when the installation is completed.

Differential Carrier, Disassemble

1. Remove axle shafts as outlined previously. Axle shafts may be pulled out only far enough to clear differential side gears.
2. Drain lubricant and remove rear cover.
3. Make sure differential side bearing caps and axle housing are marked, then remove the side bearing caps.
4. Pry differential from housing, Fig. 2.
5. Remove side bearing cups.
6. Pull off side bearings and adjusting shims, tagging the shims for identification on reassembly.
7. Unfasten ring gear from case.
8. Drive out differential pinion shaft pin and pull out the shaft, pinions and side gears.
9. Hold companion flange from turning and remove flange nut.
10. Pull flange from pinion shaft.
11. Remove pinion from carrier by tapping on front end with soft hammer.
12. Remove pinion shaft bearing oil seal and bearings from carrier, keeping separate the shim pack at each bearing.

Pinion & Bearings, Replace

If the original ring gear and pinion are being used in the original carrier, use the original shim packs at each bearing, Fig. 3. If a new pinion or differential carrier is installed, note the markings on the end of the pinion gear and on the differential carrier to obtain the correct thickness of shimming to be used with these parts from your supplier. The shims behind the rear bearing establishes the correct pinion depth.

1. Press the rear pinion bearing cup in the housing with the proper thickness of shims. Press the rear pinion bearing on the shaft.
2. Install the front bearing cup and shims, and front bearing.
3. Install the companion flange and, while holding the flange from turning, tighten the nut to a torque load of 200-220 lb. ft.
4. Check the pinion bearing pre-load with a spring scale and heavy cord wrapped around the companion flange. Pull on the spring scale. The torque required to rotate the pinion is 10-30 inch lbs. If not within these limits, add or remove shims from behind the front bearing to obtain the proper pre-load.
5. Remove the companion flange and install a new oil seal (well soaked). Reinstall the companion flange and tighten the nut.

Ring Gear, Replace

1. Install guide pins in every other hole in the ring gear. These pins can be made from 1½" long capscrews with heads cut off and ends slotted.
2. Make sure back face of ring gear and face of case are free of dirt and burrs and slip gear over pilot diameter of case.
3. Install every other ring gear bolt. Draw them up evenly and snugly so ring gear face is flush with face of case.
4. Remove guide pins and install remaining bolts.

Differential Carrier, Assemble

The differential bearings are adjusted by shims, Fig. 3. These shims also establish the ring gear position with the pinion. Therefore, backlash must be checked whenever a bearing adjustment is made.

The correct bearing adjustment is one which will provide a .008" pinch fit when the differential unit is assembled into the carrier. To make the adjustment, install the bearing cones without shims and place the assembly in the housing with the bearing cups. Force the unit to one side and check the clearance between the bearing cup and differential case with a feeler gauge, Fig. 4. When the clearance is determined, select shims of this amount plus .008" extra to establish the proper pre-load.

Remove the differential bearings again and divide the shims into two packs of equal thickness and install on each side and replace the bearings. Reinstall the unit in the carrier. This operation is made easier by cocking the bearing cups slightly when the differential is placed in the housing and then tapping them lightly with a mallet, Fig. 5. However, when installing the differential in the housing, be sure the ring gear teeth mesh with the pinion teeth before tapping the bearings in place.

After the bearing cups are firmly in place, install the bearing caps. The bearing caps and gasket surface of the housing are marked with a horizontal numeral and on the other side by a vertical numeral. The position of the numerals should correspond when reinstalling the bearing caps.

Ring Gear & Pinion Blacklash, Adjust

Mount a backlash gauge indicator on

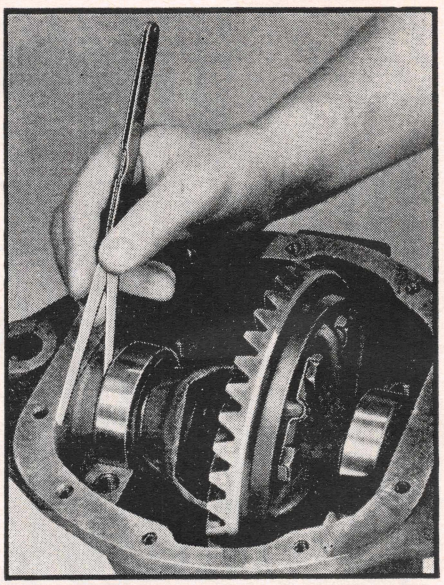

Fig. 4 Checking clearance between bearing cup and differential case. Spicer axle

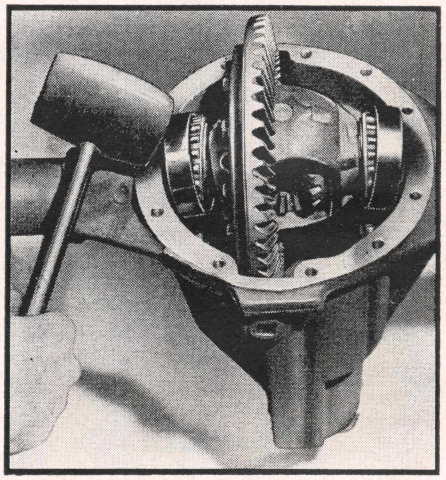

Fig. 5 Installing differential bearing cups. Spicer axle

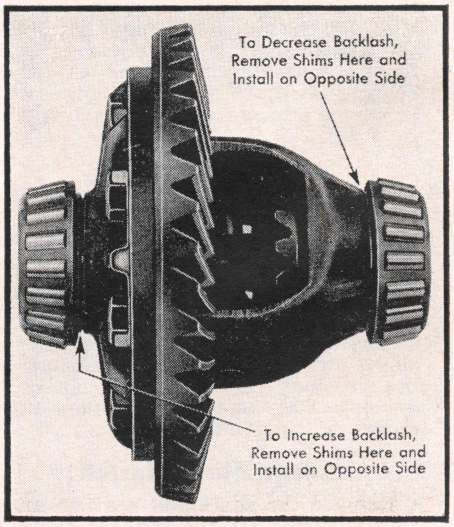

Fig. 6 Method of correcting backlash between ring gear and pinion

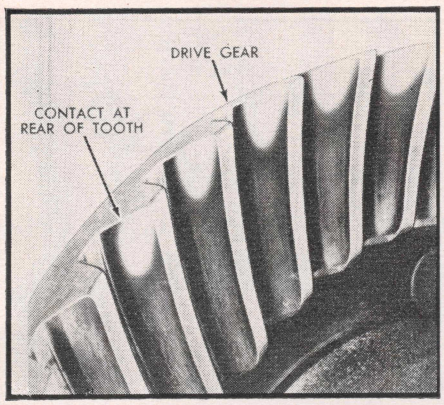

Fig. 7 Short heel contact. Move ring gear toward pinion

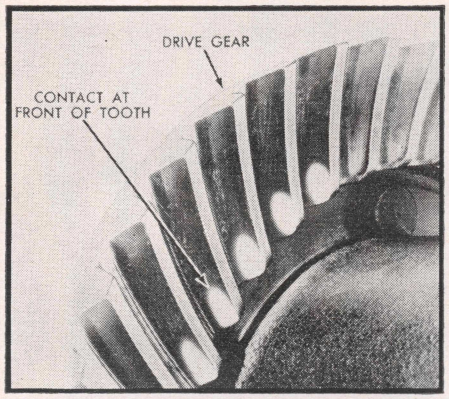

Fig. 8 Short toe contact. Move ring gear away from pinion

the carrier and start checking for the correct backlash between the ring gear and pinion. If the backlash is not within the limits of .004" to .009", it will be necessary to change the arrangement of the shims back of the bearings. Make corrections in backlash according to Fig. 6, bearing in mind that shims removed from one side must be installed on the opposite side so that the total shim thickness of the right and left side will remain unchanged, and the bearing adjustment undisturbed.

Gear Tooth Contact Pattern

Allowable variations in the carrier or drive pinion may cause the pinion to be too far in or out even when shimmed properly. Thus, the tooth contact must be tested and corrected as necessary or the gears may be noisy.

Paint the ring gear teeth with a light coating of red lead, white lead or prussian blue. Revolve the gears and observe the contact, referring to Figs. 7 to 11.

SPLIT HOUSING REAR AXLE

Remove & Disassemble, Fig. 12

It is necessary to divide the axle housing at the center to inspect or remove the differential. The differential may be removed without removing the pinion shaft. The pinion shaft and bearing assembly may be removed without dividing the axle housing.

Drain the lubricant from the housing. Raise the vehicle to remove the weight from the rear wheels and axle. Remove the spring clips which attach the left side of the axle housing to the spring. Place a jack under the right housing next to the differential to support the weight when the left housing is removed. Remove the screws connecting the two housing halves. Skid the left housing to the left to separate the housing halves, pulling the left axle shaft from the differential splines. The differential as an assembly may then be removed from the right housing.

The ring gear is riveted to the differential case. However, the differential gears and thrust washers may be installed without removing the ring gear by dividing the differential case.

The differential gears and thrust washers are supplied only as matched sets, and only the spider is supplied separately. Therefore, if any of the differential parts (except spider) must be replaced, the complete set must be installed.

Drive Pinion, Disassemble

The pinion shaft and bearing assembly may be removed without disturbing the differential assembly or dividing the axle housing.

To remove the pinion and bearing assembly, take off the pinion shaft cover with the oil seal. Use a puller to remove the pinion shaft assembly.

The pinion shaft is mounted on two tapered roller bearings with a double cup made as a single piece. To remove the bearings, remove the lock nut, washer and adjusting nut. The front bearing cone and double bearing cup may be easily removed as the cone is a slip fit on the shaft. Use a suitable puller to remove the rear cone. The pinion shaft pilot (straddle) bearing is mounted in the axle housing and is positioned by a retainer plate. Two rivets hold the plate against the housing. To remove the pilot bearing, first drive out the rivets from the front side of the axle, remove the retainer plate and drive the bearing from the housing.

The axle parts are precision machined and no adjustment of ring gear and pinion mesh is provided. The ring gear and pinion is supplied only in matched sets and the pinion shaft pilot bearing race is supplied mounted on the shaft pilot.

Pinion & Bearings, Assemble

1. Install pilot bearing retainer and drive bearing in place.
2. If necessary, press pilot bearing inner cup onto pinion shaft and install snap ring.
3. Press rear pinion shaft bearing firmly against pinion shoulder.
4. Position cup over rear bearing.
5. Install front bearing.
6. Install washer, adjusting nut, locking washer and lock nut.

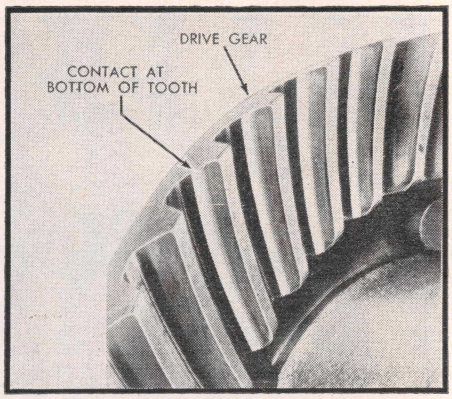

Fig. 9 Contact too low and narrow. Pinion should be moved away from center of axle

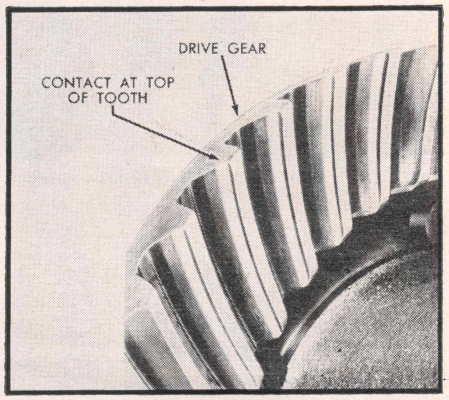

Fig. 10 Contact too high and narrow. Pinion should be moved toward center of axle

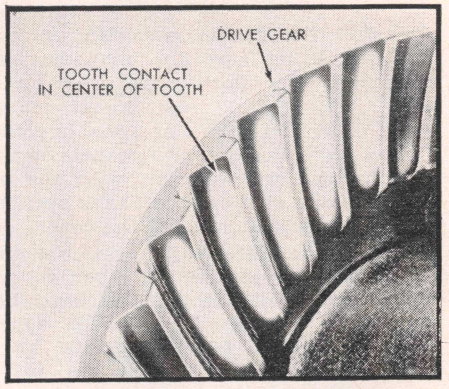

Fig. 11 Correct tooth contact. Gears making contact as shown give best results for quiet operation and long life

7. Set adjusting nut so that the bearings are preloaded 12-18 inch lbs.

This preload may be checked with a spring scale attached to the pinion shaft and by rotating the shaft by pulling on the scale the preload may be determined. This preload is necessary for satisfactory operation because these bearings carry the thrust as well as radial load. Guard against overtightening, however, as heating and bearing failure might result.

Fig. 12 Timken split housing type axle with two-piece differential case

Final Assembly

Install the pinion assembly in the housing, being sure the pilot bearing race enters the pilot bearing in the housing. Check the oil seal in the pinion shaft cover and drive a new seal in place, if necessary. Position new gaskets on the bearing spacer (retainer) with the oil drain hole in alignment with the opening in the housing, and install the cover.

Install the differential assembly and fasten the housing halves. When assembly is completed, check the backlash between the ring gear and pinion which must be between .004" and .018".

Installation in Vehicle

To install the axle under the vehicle, have the end of the vehicle securely supported with a chain hoist or a support under the frame just ahead of the rear springs. Place the axle assembly in position and raise it so the spring clips and front spring bolts may be installed. Connect the brake line hose at the frame, install lock clip and attach brake line. Connect the propeller shaft at the rear universal joint. The wheels may then be installed and the vehicle lowered to the floor. Bleed the brakes to remove any air from the lines.

"LIVE" FRONT AXLE

Four-Wheel Drive Models, Fig. 13

The front axle on these models is a live driving unit with hypoid driving gears and spherical steering knuckles mounted on pivot pins which ride on tapered roller bearings for ease of steering. The drive is of the full-floating type through axle shafts built integrally with constant velocity universal joints which revolve in the steering knuckles.

Front Axle Service

The differential is mounted in a housing similar to that used in the rear axle except that the pinion shaft faces toward the rear instead of to the front and to the right of the center of the axle. This design allows the placing of the front propeller shaft along the right side of the engine oil pan to avoid reducing road clearance under the engine.

The axle is of the full floating type and the axle shafts can be removed without dismantling the steering knuckle housing.

Overhaul of this axle unit is the same as the rear axle.

Service Note (Axle Shafts)

A change in design of the front axle on four-wheel drive vehicles was placed

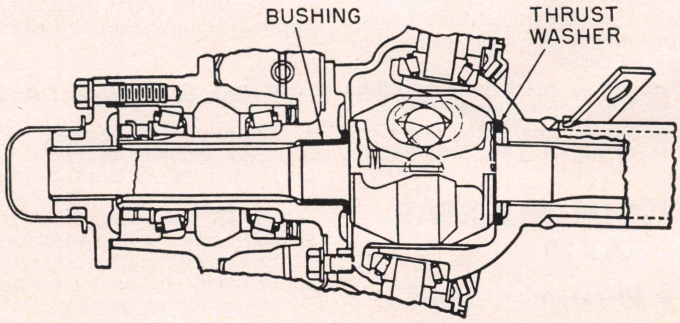

Fig. 14 Bendix type axle shaft and universal joint

Fig. 13 "Live" front axle. Four-wheel drive models

in production effective with the following serial numbers:

No. 37549 on CJ-3A
No. 44070 on 4WD
No. 14284 on 4x463

In the new design the front axle shaft outer splined end floats in the wheel driving flange and is not retained by a nut and lockwasher as originally used. With this construction it is no longer necessary to install shims between the driving flange and wheel hub to provide the correct end float of the axle shaft universal joint.

The new construction, when using the Bendix type axle shaft, is shown in Fig. 14. Note that the end float of the Bendix type joint is predetermined in manufacturer by the position and flange thickness of the bushing and thrust washer. These parts are so positioned and of the correct thickness to provide .088" maximum end float of the universal joint to operate at the centerline of the spindle pivot pins. With the correct joint end float controlled by the bushing flange and thrust washer, it is no longer necessary to install shims between the driving flange and wheel hub, a gasket only being used.

The new type Bendix axle shaft and universal joint may be readily installed in an old type axle by installing the new type flanged bushing. When this is done, discard the shims previously installed between the flange and hub, installing a gasket only. The flanged bushing requires no reaming and is so designed

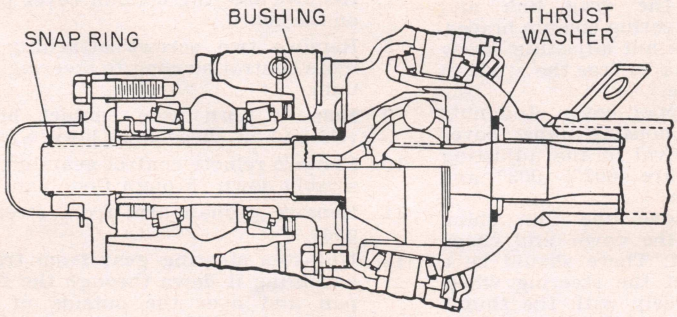

Fig. 15 Rzeppa type axle shaft and universal joint

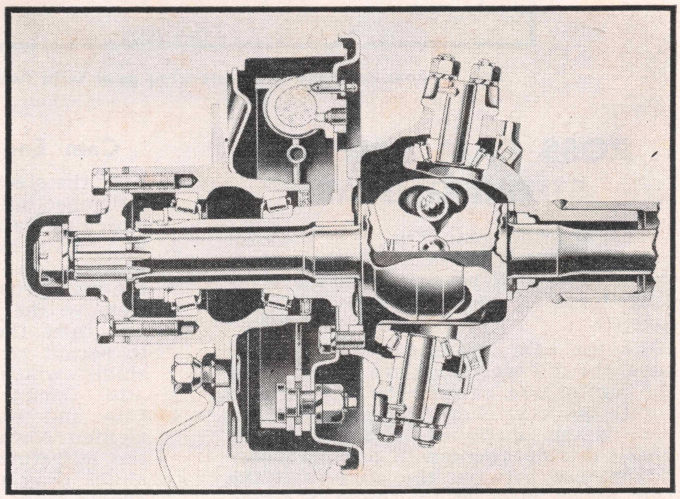

Fig. 16 Front steering knuckle with Bendix axle shaft and universal joint (early type)

that when it is pressed into the spindle it will be compressed to provide correct running clearance. Coat the inner surface of the bushing with chassis grease before installing the spindle.

The axle construction is similar for installation of the Rzeppa joint, Fig. 15. The thrust washer is not necessary although it is installed in all axles to allow installation of the Bendix type shaft if so desired. As the thrust washer is not effective, a snap ring is installed at the outer end of the shaft to control end float.

Steering Knuckle Pivot Pins, Fig. 16

When reinstalling a steering knuckle, sufficient shims must be installed under the bearing caps so the proper tension will be obtained on the bearings. The shims are available in thicknesses of .003", .005", .010" and .030".

Install one each of the shims over the studs on the steering knuckle at the top and bottom. Install the bearing caps, lock washers and nuts and tighten securely. Check the tension of the bearings by hooking a spring scale in the hole in the arm for the tie rod socket. The load should be 6-9 lbs. without the oil seal in position and is secured by adding or removing shims as required. Make sure there are the same thickness of shims between the upper cap and the knuckle as between the lower cap and knuckle.

Service Note (Lower Shims)

On models CJ-3A, 473-4WD and 4x473, .058" was added to the bottom face of the king pin boss on the steering knuckles. This eliminated the shims for the lower kingpin bearing and the adjustment of the bearing is now made by shims at the top only.

Steering Gear Section

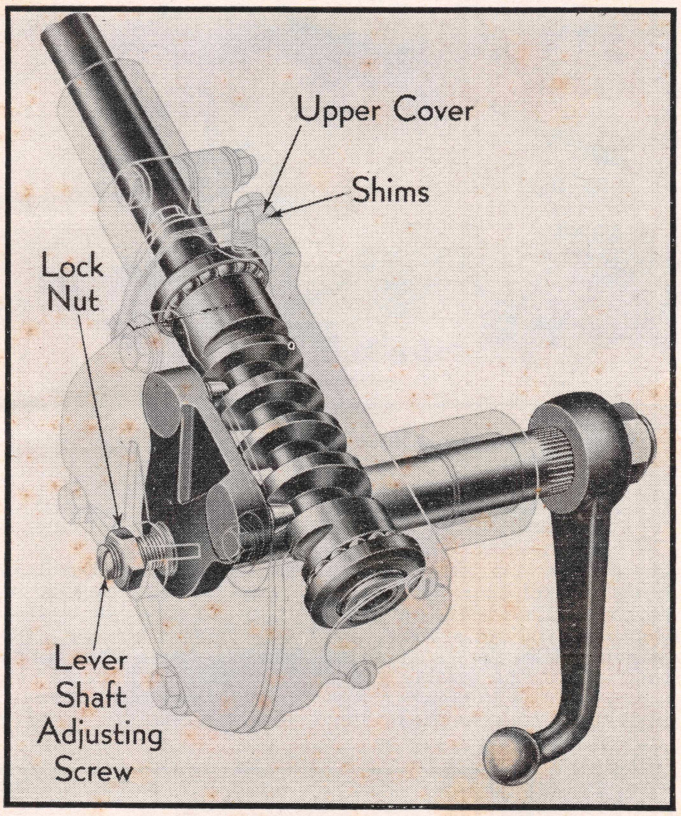

Fig. 1 Ross cam and lever steering gear with twin studs

ROSS CAM & LEVER STEERING GEAR

This steering gear, Fig. 1, is the cam and twin lever type in which the cam is mounted on ball bearings and the lever shaft turns on steel backed bronze bushings.

As the cam is turned by the wheel tube, the follower studs are pulled along the cam groove, causing the lever arm to rotate the lever shaft. The groove in the cam is cut shallower in the straight-ahead driving position to provide closer adjustment between the studs and the cam where most of the steering action occurs.

Cam End Play, Adjust

1. Free the steering gear of all load by disconnecting the drag link and loosening the steering column braces.
2. Loosen the lock nut adjusting screw in the side cover to free the studs in the cam groove.
3. Remove the upper cover stud nuts and raise the housing upper cover to permit removal of the adjusting shims, which are .002", .003" and .010" thickness.
4. Clip and remove one thin shim, tighten down the cover and check the adjustment. There should be a slight drag but the steering wheel should turn freely with the thumb and forefinger lightly gripping the rim. If necessary, remove or replace shims until the adjustment is correct.

Lever Shaft Backlash, Adjust

1. Centralize the steering gear by turning the wheel all the way to the right. Then, starting from this point, count the number of turns required to reach end of travel to the left. Turn the wheel back half this number of turns to the mid-position.
2. Tighten the side cover adjusting screw until a very slight drag is felt through the mid-position when turning the steering wheel slowly from one side to the other. The gear should not bind in any position but a slight drag should be felt in the mid-position only.
3. After proper adjustment is secured, tighten the lock nut and give the gear a final check for binding.

Steering Gear, Replace

It is necessary to pass the steering gear down through the floor pan. The procedure is as follows:

1. Remove left front fender on CJ-2A and CJ-3A.
2. Disconnect remote control rods from levers on steering column if equipped with steering post shift.
3. Remove horn button and steering wheel.
4. Remove steering post bracket at instrument panel.
5. Remove steering post hand lever.
6. Remove exhaust pipe from manifold.
7. Remove steering column cover plate on toe board.
8. Remove two screws attaching remote control housing to steering column.
9. Remove horn wire contact brush (CJ-2A) or disconnect horn wire.
10. Remove remote control gearshift assembly down through floor pan.
11. Remove pitman arm from steering gear.
12. Unfasten steering gear from frame and bring it down through the floor pan and over the outside of the frame side rail.

Stock Engine Specifications

Automotive Type

CONTINENTAL

ENGINE IDENTIFICATION—Model stamped on plate attached to engine.

GENERAL ENGINE SPECIFICATIONS

Engine Model	Type	No. Cyls. & Valve Location	Bore and Stroke	Piston Displacement Cu. In.	Compression Ratio	Maximum Brake H. P. @ R.P.M.	Maximum Torque Lb. Ft. @ R.P.M.	Normal Oil Pressure, Lbs.	Engine Oil Capacity Qts.①
F-4140	Gasoline	4 In Block	3 3/16 x 4 3/8	140	6.99	52 @ 3200	108 @ 1600	35–40	4
F-4162	Gasoline	4 In Block	3 7/16 x 4 3/8	162	7.02	58 @ 3200	122 @ 1600	35–40	4
F-6186	Gasoline	6 In Block	3 x 4 3/8	186	6.70	77 @ 3500	142 @ 1600	35–40	5
F-6209	Gasoline	6 In Block	3 3/16 x 4 3/8	209	6.70	90 @ 3500	160 @ 1600	35–40	5
F-6226	Gasoline	6 In Block	3 5/16 x 4 3/8	226	6.70	99 @ 3500	180 @ 1600	35–40	5
K-6271	Gasoline	6 In Head	3 5/8 x 4 3/8	271	6.40	115 @ 3200	216 @ 1400	40–50	7
M-6271	Gasoline	6 In Block	3 5/8 x 4 3/8	271	7.70	97 @ 3000	209 @ 1400	40–50	7
K-6290	Gasoline	6 In Head	3 3/4 x 4 3/8	290	6.40	123 @ 3200	232 @ 1400	40–50	7
M-6290	Gasoline	6 In Block	3 3/4 x 4 3/8	290	6.70	108 @ 3000	226 @ 1400	40–50	7
K-6330	Gasoline	6 In Head	4 x 4 3/8	330	6.40	147 @ 3200	266 @ 1800	40–50	7
M-6330	Gasoline	6 In Block	4 x 4 3/8	330	6.70	125 @ 3000	258 @ 1400	40–50	7
M-6363	Gasoline	6 In Block	4 x 4 13/16	363	6.70	146 @ 3000	304 @ 1600	40–50	7
K-6363	Gasoline	6 In Head	4 x 4 13/16	363	6.50	162 @ 3200	300 @ 1800	40–50	7
B-6371	Gasoline	6 In Block	4 1/8 x 4 5/8	371	6.50	124 @ 3000	284 @ 1400	40–50	7
T-6371	Gasoline	6 In Head	4 1/8 x 4 5/8	371	6.40	144 @ 3000	297 @ 1400	40–60	7
B-6427	Gasoline	6 In Block	4 5/16 x 4 7/8	427	6.50	142 @ 3000	328 @ 1200	40–50	8
T-6427	Gasoline	6 In Head	4 5/16 x 4 7/8	427	6.40	170 @ 3000	350 @ 1400	40–60	8
U-6501	Gasoline	6 In Head	4 1/2 x 5 1/4	501	6.20	178 @ 2600	414 @ 1200	55–65	14
R-6513	Gasoline	6 In Head	4 1/2 x 5 3/8	513	6.00	192 @ 2800	422 @ 1400	55–65	14
R-6572	Gasoline	6 In Head	4 3/4 x 5 3/8	572	6.00	220 @ 2800	464 @ 1200	55–65	14
R-6602	Gasoline	6 In Head	4 7/8 x 5 3/8	602	6.00	232 @ 2800	484 @ 1200	55–65	14
S-6749	Gasoline	6 In Head	5 3/8 x 5 1/2	749	6.00	250 @ 2800	574 @ 1400	55–65	18
S-6820	Gasoline	6 In Head	5 5/8 x 5 1/2	820	6.83	275 @ 2800	628 @ 1400	55–65	12
V-8603	Gasoline	8 In Head	4 3/4 x 4 1/4	603	7.00	240 @ 3200	500 @ 1400	50	18
TD-6427	Diesel	6 In Head	4 5/16 x 4 7/8	427	14.50	116 @ 2400	307 @ 1300	40–50	18
RD-6572	Diesel	6 In Head	4 3/4 x 5 3/8	572	14.50	172 @ 2400	423 @ 1300	40–60	18
SD-6802	Diesel	6 In Head	5 9/16 x 5 1/2	802	14.70	225 @ 2200	620 @ 1300	55–65	20
VD-8603	Diesel	8 In Head	4 3/4 x 4 1/4	603	15.80	182 @ 2800	470 @ 1300	50	12

①—Capacity of crankcase only, less filters.

TUNE UP & VALVE SPECIFICATIONS

Engine Model	Firing Order	Spark Plug Gap	Breaker Gap	Ignition or Injection Timing		Cylinder Head Torque Lb. Ft.	Valve Seat Angle Degrees	Valve Clearance H-Hot C-Cold		Valve Spring Pressure (Minimum) Lbs. @ Inch Length	
				Mark	Location			Intake	Exhaust	Outer	Inner
F-4140	1342	.025	.022	9°BTDC	Flywheel	②	③	.014H	.014H	96 @ 1 27/64	⑤
F-4162	1342	.025	.022	9°BTDC	Flywheel	②	③	.014H	.014H	96 @ 1 27/64	⑤
F-6186	153624	.025	.020	①	Flywheel	②	③	.014H	.014H	103 @ 1 3/8	⑤
F-6209	153624	.025	.020	①	Flywheel	②	③	.014H	.014H	96 @ 1 27/64	⑤
F-6226	153624	.025	.020	①	Flywheel	②	③	.014H	.014H	96 @ 1 27/64	⑤
K-6271	153624	.025	.020	1/2°BTDC	Flywheel	②	③	.018H	.022H	77 @ 1.01	⑤
M-6271	152624	.025	.020	1/2°BTDC	Flywheel	②	③	.017H	.020H	115 @ 1.52	⑤
K-6290	153624	.025	.020	8°BTDC	Flywheel	②	③	.018H	.022H	77 @ 1.01	⑤
M-6290	153624	.025	.020	1/2°BTDC	Flywheel	②	③	.017H	.020H	115 @ 1.52	⑤
K-6330	153624	.027	.020	8°BTDC	Pulley	②	③	.018H	.022H	77 @ 1.01	⑤
M-6330	153624	.025	.020	1/2°BTDC	Flywheel	②	③	.017H	.020H	115 @ 1.52	⑤
M-6363	153624	.025	.020	1/2°BTDC	Flywheel	②	③	.017H	.020H	115 @ 1.52	⑤
K-6363	153624	.027	.020	5°BTDC	Pulley	②	③	.017H	.022H	77 @ 1.01	⑤
B-6371	153624	.025	.020	IGN	Flywheel	②	③	.017H	.022H	137 @ 1.31	⑤
T-6371	153624	.025	.020	①	①	②	③	.018H	.022H	125 @ 1.11	57 @ 1.01
B-6427	153624	.025	.020	3/16"BTDC	Flywheel	②	③	.017H	.022H	137 @ 1.31	⑤
T-6427	153624	.025	.020	3/16"BTDC	Flywheel	②	④	.018H	.022H	125 @ 1.11	57 @ 1.01
U-6501	153624	.025	.020	①	①	②	③	.017H	.022H	47 @ 1 25/32	⑤
R-6513	153624	.025	.020	5/8"BTDC	Flywheel	②	③	.018H	.024H	153 @ 1.61	86 @ 1.36
R-6572	153624	.025	.020	5/8"BTDC	Flywheel	②	③	.018H	.024H	153 @ 1.61	86 @ 1.36
R-6602	153624	.025	.020	IGN	Flywheel	②	③	.018H	.024H	153 @ 1.61	86 @ 1.36
S-6749	153624	.025	.020	8°BTDC	Flywheel	②	③	.020H	.024H	200 @ 2 3/16	100 @ 2 1/32
S-6820	153624	.025	.020	8°BTDC	Flywheel	②	③	.020H	.024H	200 @ 2 3/16	100 @ 2 1/32
V-8603		.025	.020	3°BTDC	Pulley	105	③	.020H	.028H	81 @ 2 1/8	48 @ 1 7/8
TD-6427	153624	None	None	32°BTDC	Flywheel	②	④	.018H	.022H	69 @ 1.54	29 @ 1.45
RD-6572	153624	None	None	30°BTDC	Flywheel	105	③	.020H	.024H	78 @ 2 1/4	⑤
SD-6802	153624	None	None	38°BTDC	Flywheel	②	③	.020H	.024H	93 @ 2 3/4	
VD-8603		None	None		Pulley	105	45	.022H	.024H	78 @ 2 1/4	

①—Timing varies with type of vehicle operation.
②—For 3/8" 35–40, 7/16" 70–75, 1/2" 95, 9/16" 135, 5/8" 150.
③—Intake 30, exhaust 45.
④—Intake 15, exhaust 45.
⑤—Single spring used.

PISTONS, PINS, RINGS, CRANKSHAFT & BEARINGS

Engine Model	Piston Clearance	Wrist Pin Diameter	Ring End Gap (Minimum)		Rod Bearings			Main Bearings		
			Comp.	Oil	Shaft Diameter	Bearing Clearance	Rod Bolt Torque Lb. Ft.	Shaft Diameter	Bearing Clearance	Main Bolt Torque Lb. Ft.
F-4140	.002	.859	.008	.007	1.9365–1.9375	.0002–.0022	①	2.249–2.250	.0002–.0024	①
F-4162	.002	.859	.007	.007	1.9365–1.9375	.0002–.0022	①	2.249–2.250	.0002–.0024	①
F-6186	.003	.859	.007	.007	1.9365–1.9375	.0002–.0022	①	2.249–2.250	.0002–.0024	①
F-6209	.002	.859	.007	.008	1.9365–1.9375	.0002–.0022	①	2.249–2.250	.0002–.0024	①
F-6226	.002	.859	.010	.008	2.0619–2.0627	.0000–.0018	①	2.3744–2.3752	.0000–.002	①
K-6271	.004	1.109	.013	.013	2.248–2.249	.0009–.0029	①	2.623–2.624	.0015–.0037	①
M-6271	.004	1.109	.008	.008	2.248–2.249	.0009–.0029	①	2.623–2.624	.0015–.0037	①
K-6290	.005	1.109	.013	.013	2.248–2.249	.0009–.0029	①	2.623–2.624	.0015–.0037	①
M-6290	.005	1.109	.008	.008	2.248–2.249	.0009–.0029	①	2.623–2.624	.0015–.0037	①
K-6330	.005	1.109	.013	.013	2.248–2.249	.0009–.0029	①	2.623–2.624	.0015–.0037	①

PISTONS, PINS, RINGS, CRANKSHAFT & BEARINGS continued

Engine Model	Piston Clearance	Wrist Pin Diameter	Ring End Gap (Minimum)		Rod Bearings			Main Bearings		
			Comp.	Oil	Shaft Diameter	Bearing Clearance	Rod Bolt Torque Lb. Ft.	Shaft Diameter	Bearing Clearance	Main Bolt Torque Lb. Ft.
M-6330	.005	1.109	.011	.010	2.248–2.249	.0009–.0029	①	2.623–2.624	.0015–.0037	①
M-6363	.005	1.109	.011	.010	2.248–2.249	.0009–.0029	①	2.623–2.624	.0015–.0037	①
K-6363	.005	1.109	.013	.013	2.248–2.249	.0009–.0029	①	2.623–2.624	.0015–.0037	①
B-6371	.005	1.250	.011	.007	2.498–2.499	.001–.003	①	2.873–2.874	.0015–.0037	①
T-6371	.005	1.250	.013	.013	2.498–2.499	.001–.003	①	2.873–2.874	.0015–.0037	①
B-6427	.005	1.250	.013	.013	2.498–2.499	.001–.003	①	2.873–2.874	.0015–.0037	①
T-6427	.005	1.250	.013	.013	2.498–2.499	.001–.003	①	2.873–2.874	.0015–.0037	①
U-6501	.005	1.500	.010	.010	2.7475–2.7485	.0011–.0036	①	2.7475–2.7485	.0011–.0041	①
R-6513	.005	1.500	.010	.010	2.999–3.000	.0012–.0028	①	3.249–3.250	.0022–.0046	①
R-6572	.005	1.500	.010	.010	2.999–3.000	.0012–.0028	①	3.249–3.250	.0022–.0046	①
R-6602	.006	1.500	.010	.010	2.999–3.000	.0012–.0028	①	3.249–3.250	.0022–.0046	①
S-6749	.008	1.750	.017	.022	3.499–3.500	.0015–.0045	①	3.749–3.750	.0016–.0046	①
S-6820	.008	1.750	.022	.022	3.499–3.500	.0015–.0045	①	3.749–3.750	.0016–.0046	①
V-8603	.002	1.500	.013	.015	3.124–3.125	.0016–.0042	①	3.499–3.500	.0018–.0044	①
TD-6427	.006	1.250	.013	.013	2.498–2.499	.001–.003	①	2.873–2.874	.0015–.0037	①
RD-6572	.006	1.500	.010	.010	2.999–3.000	.0012–.0028	①	3.249–3.250	.0022–.0046	①
SD-6802	.007	1.750	.013	.013	3.499–3.500	.0015–.0045	①	3.749–3.750	.0016–.0046	①
VD-8603	.005	1.500	.013	.013	3.124–3.125	.0016–.0042	①	3.499–3.500	.0018–.0044	①

①—5/16" 20–25, 3/8" 35–40, 7/16" 70–75, 1/2" 85–95, 9/16" 100–110.

HALL-SCOTT-HERCULES

ENGINE IDENTIFICATION—Model stamped on plate attached to engine.

GENERAL ENGINE SPECIFICATIONS

Engine Model	Type	No. Cyls. & Valve Location	Bore and Stroke	Piston Displacement Cu. In.	Compression Ratio	Maximum Brake H. P. @ R.P.M.	Maximum Torque Lb. Ft. @ R.P.M.	Normal Oil Pressure, Lbs.	Engine Oil Refill Capacity, Qts.
190-2	Gasoline	6 In Head	5¼ x 6	779	6.00	240 @ 2200	625 @ 1300	80	20
190-5	Gasoline	6 In Head	5¼ x 6	779	6.00	240 @ 2200	625 @ 1300	80	20
590-GV-3	Gasoline	6 In Head	5 x 5	590	6.60	239 @ 2800	490 @ 1600	60	12
590-GV-4	Gasoline	6 In Head	5 x 5	590	6.60	239 @ 2800	490 @ 1600	60	12
590-BV-1	L. P. G.	6 In Head	5 x 5	590	8.70	256 @ 2800	530 @ 1600	60	12
590-GH-1	Gasoline	6 In Head	5 x 5	590	6.60	239 @ 2800	490 @ 1600	60	18
590-BH-1	L. P. G.	6 In Head	5 x 5	590	8.70	256 @ 2800	530 @ 1600	60	18
779	Gasoline	6 In Head	5¼ x 6	779	6.00	240 @ 2200	625 @ 1300	80	20
935-B-1	L. P. G.	6 In Head	5¾ x 6	935	8.10	330 @ 2400	880 @ 1400	60	22
935-G-1	Gasoline	6 In Head	5¾ x 6	935	6.40	294 @ 2400	820 @ 1400	60	22
1091-B-1	L. P. G.	6 In Head	5¾ x 7	1090	8.10	357 @ 2200	1070 @ 1200	60	22
1091-G-1	Gasoline	6 In Head	5¾ x 7	1090	6.40	318 @ 2200	945 @ 1400	60	22
6156-B-1	L. P. G.	6 In Head	5¾ x 6	935	8.10	342 @ 2400	890 @ 1400	60	22
6156-G-1	Gasoline	6 In Head	5¾ x 6	935	6.40	310 @ 2400	812 @ 1300	60	22
6182-B-1	L. P. G.	6 In Head	5¾ x 7	1091	8.10	368 @ 2200	1091 @ 1100	60	22
6182-G-1	Gasoline	6 In Head	5¾ x 7	1091	6.50	332 @ 2200	960 @ 1200	60	22

TUNE UP & VALVE SPECIFICATIONS

Engine Model	Firing Order	Spark Plug Gap	Breaker Gap	Ignition Timing		Cylinder Head Torque Lb. Ft.	Valve Seat Angle Degrees	Valve Clearance		Valve Spring Pressure (Minimum) Lbs. @ Inch Length	
								H-Hot	C-Cold		
				Mark	Location			Intake	Exhaust	Inner	Outer
190-2	153624	.025	.018	①	Flywheel	④	②	.022C	.022C	110 @ 1 15/16	143 @ 2
190-5	153624	.025	.018	①	③	④	②	.022C	.022C	110 @ 1 15/16	143 @ 2
590-GV-3	153624	.025	.020	"5"	③	⑤	45	.021C	.021C	80 @ 1 3/4	144 @ 1 3/16
590-GV-4	153624	.025	.020	"5"	③	⑤	45	.021C	.021C	80 @ 1 3/4	144 @ 1 3/16
590-BV-1	153624	.015	.020	"10"	③	⑤	45	.021C	.021C	80 @ 1 3/4	144 @ 1 3/16
590-GH-1	153624	.025	.020	"5"	③	⑤	45	.021C	.021C	80 @ 1 3/4	144 @ 1 3/16
590-BH-1	153624	.015	.020	"10"	③	⑤	45	.021C	.021C	80 @ 1 3/4	144 @ 1 3/16
779	153624	.025	.018	①	Flywheel	④	②	.022C	.022C	110 @ 1 15/16	143 @ 2
935-B-1	142635	.016	.021	3/4"BTDC	Flywheel	⑥	②	.021C	.031C	105 @ 1 15/16	138 @ 2
935-G-1	142635	.016	.021	3/4"BTDC	Flywheel	⑥	②	.021C	.031C	105 @ 1 15/16	138 @ 2
1091-B-1	142635	.016	.021	3/4"BTDC	Flywheel	⑥	②	.021C	.031C	105 @ 1 15/16	138 @ 2
1091-G-1	142635	.016	.021	3/4"BTDC	Flywheel	⑥	②	.021C	.031C	105 @ 1 15/16	138 @ 2
6156-B-1	142635	.016	.021	1 1/2"BTDC	Flywheel	⑥	②	.021C	.031C	110 @ 1 15/16	143 @ 2
6156-G-1	142635	.016	.021	1 1/2"BTDC	Flywheel	⑥	②	.021C	.031C	110 @ 1 15/16	143 @ 2
6182-B-1	142635	.016	.021	5/8"BTDC	Flywheel	⑥	②	.021C	.031C	110 @ 1 15/16	143 @ 2
6182-G-1	142635	.016	.021	5/16"BTDC	Flywheel	⑥	②	.021C	.031C	110 @ 1 15/16	143 @ 2

①—Three flywheel teeth before TDC mark on flywheel.
②—Intake 30°, exhaust 45°.
③—Flywheel and crankshaft pulley.
④—1/2" 35. 3/4" 215.
⑤—Small 35, large 185.
⑥—Large 240, small nuts 40.

PISTONS, PINS, RINGS, CRANKSHAFT & BEARINGS

Engine Model	Piston Clearance	Wrist Pin Diameter	Ring End Gap (Minimum)		Rod Bearings			Main Bearings		
			Comp.	Oil	Shaft Diameter	Bearing Clearance	Rod Bolt Torque Lb. Ft.	Shaft Diameter	Bearing Clearance	Main Bolt Torque Lb. Ft.
190-2	.0105	1.400	.013	.025	2.7475–2.7480	.004	130–140	3.247–3.2475	.004	180–200
190-5	.0105	1.400	.013	.025	2.7475–2.7480	.004	130–140	3.247–3.2475	.004	180–200
590-GV-3	.003	1.500	.017	.013	2.9970–2.9975	.003	100–120	3.248–3.2485	.004	130–140
590-GV-4	.003	1.500	.017	.013	2.9970–2.9975	.003	100–120	3.248–3.2485	.004	130–140
590-BV-1	.003	1.500	.017	.013	2.9970–2.9975	.003	100–120	3.248–3.2485	.004	130–140
590-GH-1	.003	1.500	.017	.013	2.9970–2.9975	.003	100–120	3.248–3.2485	.004	130–140
590-BH-1	.003	1.500	.017	.013	2.9970–2.9975	.003	100–120	3.248–3.2485	.004	130–140
779	.0105	1.400	.013	.025	2.7475–2.7480	.004	130–140	3.247–3.2475	.004	180–200
935-B-1	.006	1.6247	.020	.013	3.2468–3.2473	.0035	130–140	3.4968–3.4973	.004	180–200
935-G-1	.006	1.6247	.020	.013	3.2468–3.2473	.0035	130–140	3.4968–3.4973	.004	180–200
1091-B-1	.006	1.6247	.020	.013	3.2468–3.2473	.0035	130–140	3.4968–3.4973	.004	180–200
1091-G-1	.006	1.6247	.020	.013	3.2468–3.2473	.0035	130–140	3.4968–3.4973	.004	180–200
6156-B-1	.006	1.6247	.020	.013	3.2468–3.2473	.0035	130–140	3.4968–3.4973	.004	180–200
6156-G-1	.006	1.6247	.020	.013	3.2468–3.2473	.0035	130–140	3.4968–3.4973	.004	180–200
6182-B-1	.006	1.6247	.020	.013	3.2468–3.2473	.0035	130–140	3.4968–3.4973	.004	180–200
6182-G-1	.006	1.6247	.020	.013	3.2468–3.2473	.0035	130–140	3.4968–3.4973	.004	180–200

HERCULES

ENGINE IDENTIFICATION—Model stamped on plate attached to engine.

GENERAL ENGINE SPECIFICATIONS

Engine Model	Type	No. Cyls. & Valve Location	Bore and Stroke	Piston Displacement Cu. In.	Compression Ratio	Maximum Brake H. P. @ R.P.M.	Maximum Torque Lb. Ft. @ R.P.M.	Normal Oil Pressure, Lbs.	Engine Oil Capacity Qts.
DFXE	Diesel	6 In Head	5 5/8 x 6	895	14.80	227 @ 2100	685 @ 1250	50	24
DFXH	Diesel	6 In Head	5 3/4 x 6	935	14.80	260 @ 2100	750 @ 1200	50	24
DIX4D	Diesel	4 In Head	3 5/8 x 4	166	15.50	57 @ 3000	120 @ 1500	30	①
DIX6-272	Diesel	6 In Head	3 11/16 x 4 1/4	272	15.50	103 @ 3000	202 @ 1800	30	①
DJXB	Diesel	6 In Head	3 1/2 x 4 1/2	260	15.50	77 @ 2600	178 @ 1300	45	①
DJXC	Diesel	6 In Head	3 3/4 x 4 1/2	298	15.50	83 @ 2600	208 @ 1300	45	①
DJXH	Diesel	6 In Head	3 3/4 x 4 1/2	298	15.50	99 @ 2600	234 @ 1400	45	①
DOOD	Diesel	4 In Head	4 1/4 x 4 1/2	255	15.50	79 @ 2600	183 @ 1400	30	①
DRXC	Diesel	6 In Head	4 5/8 x 5 1/4	529	15.00	147 @ 2200	400 @ 1100	30	①
DWXLD	Diesel	6 In Head	4 1/4 x 5	426	15.50	142 @ 2600	328 @ 1600	40	①
HXE	Gasoline	6 In Block	5 3/4 x 6	935	6.20	227 @ 2000	750 @ 900	35	①
IXB	Gasoline	4 In Block	3 1/4 x 4	133	6.50	46 @ 3200	92 @ 1890	20	①
JXC	Gasoline	6 In Block	3 3/4 x 4 1/4	282	6.50	103 @ 3200	207 @ 1400	26	①
JXD	Gasoline	6 In Block	4 x 4 1/4	320	6.50	112 @ 3200	240 @ 1400	26	①
JXLD	Gasoline	6 In Block	4 x 4 1/2	339	6.50	131 @ 3200	272 @ 1400	26	①
QXD	Gasoline	6 In Block	3 7/16 x 4 1/8	230	6.50	78 @ 3200	167 @ 1500	26	①
QXLD	Gasoline	6 In Block	3 7/16 x 4 1/4	237	6.50	92 @ 3200	190 @ 1400	26	①
RXC	Gasoline	6 In Block	4 5/8 x 5 1/4	529	6.30	143 @ 2400	372 @ 1100	26	①
RXLDH	Gasoline	6 In Block	4 3/4 x 5 1/4	558	6.50	181 @ 2600	443 @ 1400	36	①
TCD-895	Diesel	6 In Head	5 5/8 x 6	895	14.80	318 @ 2000	846 @ 1800	50	①
WXLC-3	Gasoline	6 In Block	4 1/4 x 4 3/4	404	6.50	139 @ 2600	312 @ 1300	26	①

①—Depends upon type of oil pan used.

TUNE UP & VALVE SPECIFICATIONS

Engine Model	Firing Order	Spark Plug Gap	Breaker Gap	Ignition or Injection Timing		Cylinder Head Torque Lb. Ft.	Valve Seat Angle Degrees	Valve Clearance		Valve Spring Pressure (Minimum) Lbs. @ Inch Length	
								H-Hot	C-Cold		
				Mark	Location			Intake	Exhaust	Outer	Inner
DFXE	153624	None	None	27° BTDC	Flywheel	350	45	.010H	.016H	94 @ 3	57 @ 2 21/32
DFXH	153624	None	None	27° BTDC	Flywheel	350	45	.010H	.016H	124 @ 1 25/32	96 @ 1 21/32
DIX-4-D	153624	None	None	30° BTDC	Flywheel	158	45	①	①	49 @ 1.21	34 @ 1.09
DIX-6-272	153624	None	None	30° BTDC	Flywheel	158	45	①	①	49 @ 1.21	34 @ 1.09
DJXC	153624	None	None	26° BTDC	Flywheel	157	45	①	①	55 @ 1.40	37 @ 1.28
DJXH	153624	None	None	29° BTDC	Flywheel	157	45	①	①	55 @ 1.40	37 @ 1.28
DOOD	1243	None	None	25° BTDC	Flywheel	157	45	①	①	55 @ 1.40	37 @ 1.28
DRXC	153624	None	None	30° BTDC	Flywheel	②	45	①	①	48 @ 1.45	30 @ 1.33
DWXLD	153624	None	None	24° BTDC	Flywheel	158	45	①	①	84 @ 1 37/64	74 @ 1 31/64
HXE	153624	.025	.020	DC 1-6	Flywheel	105	30	.010H	.016H	84 @ 3 5/32	50 @ 2 13/16
IXB	1243	.025	.020	DC 1-4	Flywheel	40	30	.006H	.008H	42 @ 1 3/16	③
JXC	153624	.025	.020	DC 1-6	Flywheel	④	45	①	①	58 @ 1.60	③
JXD	153624	.025	.020	DC 1-6	Flywheel	④	45	①	①	58 @ 1.60	③
JXLD	153624	.025	.020	DC 1-6	Flywheel	④	⑤	①	①	58 @ 1.60	③
QXD	153624	.025	.020	DC 1-6	Flywheel	⑦	30	①	①	40 @ 1 9/32	③
QXLD	153624	.025	.020	DC 1-6	Flywheel	⑦	30	①	①	40 @ 1 9/32	③

TUNE UP & VALVE SPECIFICATIONS continued

Engine Model	Firing Order	Spark Plug Gap	Breaker Gap	Ignition or Injection Timing		Cylinder Head Torque Lb. Ft.	Valve Seat Angle Degrees	Valve Clearance H-Hot C-Cold		Valve Spring Pressured (Minimum) Lbs. @ Inch Length	
				Mark	Location			Intake	Exhaust	Outer	Inner
RXC	153624	.025	.020	DC 1-6	Flywheel	⑧	45	①	①	102 @ 2 5/32	③
RXLDH	153624	.025	.020	DC 1-6	Flywheel	80	⑩	①	①	102 @ 2 5/32	③
TDC-895	153624	None	None			350	45	.010H	.016H	57 @ 2 21/32	94 @ 2 31/32
WXLC-3	153624	.025	.020	DC 1-6	Flywheel	⑨	30	.012H	.016H	102 @ 2 5/32	③

①—See Instruction Plate on engine.
②—For 5/8″ nuts 175, for 1″ nuts 280.
③—Single spring used.
④—Nuts 65, screws on manifold side 75, screws marked "1041" 100, other screws 85.
⑤—Exhaust 45°, intake 30° or 45°.
⑥—Nuts 60, screws marked "1041" 100, screws marked "30-37" 80.
⑦—Nuts 60, screws with washers 100.
⑧—Cap screws 75, nuts 85.
⑨—Cap screws 75, nuts 100.
⑩—Intake 30°, exhaust 45°.

PISTONS, PINS, RINGS, CRANKSHAFT & BEARINGS

Engine Model	Piston Clearance	Wrist Pin Diameter	Ring End Gap (Minimum)		Rod Bearings			Main Bearings		
			Comp.	Oil	Shaft Diameter	Bearing Clearance	Rod Bolt Torque Lb. Ft.	Shaft Diameter	Bearing Clearance	Main Bolt Torque Lb. Ft.
DFXE	.009	2.00	.018	.022	3.309–3.310	.003–.0055	263	4.499–4.500	.005–.006	260
DFXH	.0145	2.00	.018	.022	3.309–3.310	.003–.0055	263	4.499–4.500	.005–.006	260
DIX-4-D	.006	1.125	.012	.012	2.372–2.373	.003–.004	150	2.747–2.748	.003–.0045	①
DIX-6-272	.006	1.125	.012	.012	2.372–2.373	.003–.004	150	2.747–2.748	.003–.0045	①
DJXC	.0055	1.187	.018	.018	2.497–2.498	.003–.004	175	2.997–2.998	.003–.0045	②
DJXH	.0055	1.187	.018	.018	2.497–2.498	.003–.004	175	2.997–2.998	.003–.0045	②
DOOD	.0055	1.187	.018	.018	2.497–2.498	.003–.004	175	2.997–2.998	.003–.0045	②
DRXC	.0075	1.625	.018	.018	2.997–2.998	.003–.004	175	3.497–3.498	.003–.004	175
DWXLD	.0125	1.50	.015	.015	2.747–2.748	.0045–.0055	③	3.497–3.498	.0045–.0055	175
HXE	.006	1.50	.020	.020	2.997–2.998	.003–.004	263	3.497–3.498	.003–.004	④
IXB	.0035	.75	.015	.015	1.747–1.748	.001–.0015	42	1.987–1.988	.002–.0025	77
JXC	.0035	1.00	.015	.015	1.987–1.988	.0025–.003	56	2.497–2.498	.0035–.004	⑤
JXD	.0045	1.00	.015	.015	1.987–1.988	.0025–.003	56	2.497–2.498	.0035–.004	⑤
JXLD	.005	1.125	.015	.015	1.987–1.988	.0025–.003	56	2.497–2.498	.0035–.004	⑤
QXD	.003	.875	.015	.015	1.987–1.988	.001–.0015	39	2.497–2.498	.002–.003	⑤
QXLD	.0035	.875	.015	.015	1.987–1.988	.001–.0015	39	2.497–2.498	.002–.003	⑤
RXC	.0045	1.25	.015	.015	2.622–2.623	.002–.003	⑦	2.997–2.998	.003–.004	⑧
RXLDH	.0065	1.50	.015	.015	2.997–2.998	.004–.0045	158	3.497–3.498	.0045–.005	175
TCD-895	.008	2.00	.018	.018	3.309–3.310	.0035–.0045	263	4.449–4.500	.005–.006	260
WXLC-3	.0045	1.31	.015	.015	2.247–2.248	.0015–.0025	⑨	2.622–2.623	.0025–.0035	⑩

①—Front, center and rear 105, intermediate 85.
②—For 5/8″ nuts 95, for 1/2″ nuts 78.
③—For 1/2″ nuts 158, for 9/16″ nuts 225.
④—Front and intermediate 210, center and rear 192.
⑤—Front and intermediate 70, center and rear 60.
⑥—Front and intermediate 80, center and rear 70.
⑦—For 1/2″ 105, for 9/16″ 115.
⑧—Front and center 123, center and rear 105.
⑨—For 1/2″ 105, for 7/16″ 53.
⑩—Front and intermediate 70, center and rear 75.

WAUKESHA

ENGINE IDENTIFICATION—Model stamped on plate attached to engine.

GENERAL ENGINE SPECIFICATIONS

Engine Model	Type	No. Cyls. & Valve Location	Bore and Stroke	Piston Displacement Cu. In.	Compression Ratio	Maximum Brake H. P. @ R.P.M.	Maximum Torque Lb. Ft. @ R.P.M.	Normal Oil Pressure, Lbs.	Engine Oil Capacity, Qts.①
135-DK	Diesel	6 In Head	4¼ x 5	426	16.80	140 @ 2400	326 @ 1600	40	12
135-DKB	Diesel	6 In Head	4¼ x 5	426	16.8	147 @ 2800	328 @ 1600	40	12
135-DKBS	Diesel	6 In Head	4¼ x 5	426	16.8	185 @ 2800	400 @ 1800	40	12
135-GKB	Gasoline	6 In Head	4¼ x 5	426	6.25	148 @ 3000	337 @ 1200	40	12
135-GZ	Gasoline	6 In Head	4⅜ x 5	451	6.30	153 @ 2800	351 @ 1300	40	12
135-GZB	Gasoline	6 In Head	4⅜ x 5	451	6.30	153 @ 2800	354 @ 1200	40	12
140-GK	Gasoline	6 In Head	4½ x 5½	525	6.40	155 @ 2250	420 @ 1000	40	10
140-GKB	Gasoline	6 In Head	4½ x 5½	525	6.40	220 @ 3200	466 @ 1800	40	10
140-GZ	Gasoline	6 In Head	4⅝ x 5½	554	6.40	170 @ 2250	468 @ 1000	40	10
140-GZB	Gasoline	6 In Head	4⅝ x 5½	554	6.40	226 @ 3200	490 @ 1800	40	10
145-GK	Gasoline	6 In Head	5¼ x 6	779	6.20	240 @ 2400	594 @ 1000	40	18
145-GKB	Gasoline	6 In Head	5¼ x 6	779	6.20	260 @ 2400	640 @ 1000	40	18
145-GZ	Gasoline	6 In Head	5⅜ x 6	817	6.30	250 @ 2400	630 @ 1200	40	18
145-GZB	Gasoline	6 In Head	5⅜ x 6	817	6.30	268 @ 2400	652 @ 1200	40	18
148-DK	Diesel	6 In Head	5¼ @ 6	779	16.50	197 @ 2000	584 @ 1000	40	18
148-DKB	Diesel	6 In Head	5¼ x 6	779	16.50	200 @ 2100	584 @ 1000	40	18
148-DKBS	Diesel	6 In Head	5¼ x 6	779	16.50	280 @ 2100	706 @ 1800	40	18
180-DLC	Diesel	4 In Head	3½ x 3¾	144	17.10	45 @ 2400	102 @ 1800	25–30	5
180-GLB	Gasoline	4 In Head	3½ x 3¾	144	7.00	45 @ 2400	118 @ 1600	25–30	5
185-DLC	Diesel	6 In Head	3½ x 3¾	216	17.10	60 @ 2400	152 @ 1000	25–30	8
185-GLB	Gasoline	6 In Head	3½ x 3¾	216	7.00	67 @ 2400	176 @ 1400	25–30	8
190-DLCA	Diesel	6 In Head	3¾ x 4	265	17.00	85 @ 2600	191 @ 1400	25–30	7
190-GLB	Gasoline	6 In Head	3¾ x 4	265	7.00	77 @ 2200	223 @ 1200	25–30	7
195-DLCA	Diesel	6 In Head	4 x 4	302	17.00	98 @ 2800	221 @ 1800	25–30	7
195-GKA	Gasoline	6 In Head	4⅛ x 4	320	6.20	125 @ 3200	263 @ 1600	25–30	7
195-GL	Gasoline	6 In Head	4 x 4	302	6.20	85 @ 2400	240 @ 1200	25–30	7
197-DLC	Diesel	6 In Head	4 x 4	302	18.50	91 @ 2800	216 @ 1600	40	7
197-DLCS	Diesel	6 In Head	4 x 4	302	18.50	131 @ 2800	275 @ 1800	40	7
MZA	Gasoline	6 In Block	4¼ x 4¾	404	5.60	130 @ 3000	289 @ 1000	40	8
WAKB	Gasoline	6 In Head	6¼ x 6½	1197	7.00	280 @ 1800	997 @ 1000	40	32
WAKC	Gasoline	6 In Head	6¼ x 6½	1197	7.00	290 @ 1800	1020 @ 1000	40	32
WAKD	Diesel	6 In Head	6¼ x 6½	1197	16.50	224 @ 1600	840 @ 1000	40	32
WAKDB	Diesel	6 In Head	6¼ x 6½	1197	16.50	258 @ 1800	845 @ 1000	40	32
WAKDBS	Diesel	6 In Head	6¼ x 6½	1197	16.50	400 @ 1800	1400 @ 1200	40	32
ROILINE									
H540	Gasoline	V8 In Head	4½ x 4¼	540	6.70	170 @ 2400	430 @ 900	40	②
H570	Gasoline	V8 In Head	4⅝ x 4¼	570	7.45	218 @ 2400	509 @ 1600	50	②
H844	Gasoline	V8 In Head	5¼ x 4⅞	844	6.70	300 @ 2400	637 @ 1500	30–40	③
H884	Gasoline	V8 In Head	5⅜ x 4⅞	884	7.62	320 @ 2400	770 @ 1500	50	③

① Sump capacity only. Add for filters, etc.
② H540 16 qts., T-H540 9 qts. ③ H844 and H884 20 qts., T-H844 and T-H884 front sump 16 qts., center sump 20 qts.

TUNE UP & VALVE SPECIFICATIONS

Engine Model	Firing Order	Spark Plug Gap	Breaker Gap	Ignition or Injection Timing		Cylinder Head Torque (Oiled) Inch Lbs.	Valve Seat Angle Degrees	Valve Clearance⑨ C-Cold		Valve Spring Pressure (Minimum) Lbs. @ Inch Length	
				Mark	Location			Intake	Exhaust	Outer	Inner
135-DK	153624	None	None	⑧	Flywheel	2000–2100	45	.011C	.023C	82 @ 2 5/16	①
135-DKB	153624	None	None	FP⑧	Flywheel	2000–2100	45	.011C	.023C	82 @ 2 5/16	①
135-DKBS	153624	None	None	FP⑧	Flywheel	2000–2100	45	.011C	.023C	82 @ 2 5/16	①
135-GKB	153624	.025	.018	Dist.⑧	Flywheel	2000–2100	45	.011C	.023C	82 @ 2 5/32	①
135-GZ	153624	.025	.018	⑧	Flywheel	2000–2100	45	.011C	.023C	82 @ 2 5/32	①
135-GZB	153624	.025	.018	Dist.⑧	Flywheel	2000–2100	45	.011C	.023C	82 @ 2 5/32	①
140-GK	153624	.025	.018	Dist.⑧	Flywheel	2400–2500	②	.013C	.019C	86 @ 1 21/32	55 @ 1 7/16
140-GKB	153624	.025	.018	Dist.⑧	Flywheel	2400–2500	②	.013C	.025C	177 @ 1 41/64	①
140-GZ	153624	.025	.018	Dist.⑧	Flywheel	2400–2500	②	.013C	.019C	177 @ 1 41/64	①
140-GZB	153624	.025	.018	Dist.⑧	Flywheel	2400–2500	②	.013C	.025C	177 @ 1 41/64	①
145-GK	153624	.025	.018	Dist.⑧	Flywheel	③	②	.013C	.024C	118 @ 2 3/8	81 @ 2 1/16
145-GKB	153624	.025	.018	Dist.⑧	Flywheel	③	②	.013C④	.030C④	265 @ 1 63/64	①
145-GZ	153624	.025	.018	Dist.⑧	Flywheel	③	②	.013C	.024C	265 @ 1 63/64	①
145-GZB	153624	.025	.018	Dist.⑧	Flywheel	③	②	.013C④	.030C④	265 @ 1 63/64	①
148-DK	153624	None	None	⑧	Flywheel	3500–3600	45	.015C	.028C	158 @ 2 3/8	100 @ 2 1/16
148-DKB	153624	None	None	FP⑧	Flywheel	3500–3600	45	.015C	.028C	158 @ 2 3/8	100 @ 2 1/16
148-DKBS	153624	None	None	FP⑧	Flywheel	3500–3600	45	.015C	.028C	158 @ 2 3/8	100 @ 2 1/16
180-DLC	1243	None	None	FP⑧	Flywheel	1350–1400⑦	45	.010C	.020C	48 @ 1 5/16	①
180-GLB	1243	.025	.018	Dist.⑧	Flywheel	1100–1200	45	.010C	.020C	48 @ 1 15/16⑤	45 @ 1 47/64⑥
185-DLC	153624	None	None	FP⑧	Flywheel	1350–1400⑦	45	.010C	.020C	48 @ 1 15/16	①
185-GLB	153624	.025	.018	Dist.⑧	Flywheel	1100–1200	45	.010C	.020C	48 @ 1 15/16⑤	45 @ 1 47/64⑥
190-DLCA	153624	None	None	FP⑧	Flywheel	1350–1400⑦	45	.010C	.020C	71 @ 1 19/32	①
190-GLB	153624	.025	.018	Dist.⑧	Flywheel	1100–1200	45	.008C	.022C	48 @ 1 15/16⑤	45 @ 1 47/64⑥
195-DLCA	153624	None	None	FP⑧	Flywheel	1350–1400⑦	45	.010C	.020C	124 @ 1 15/16	①
195-GKA	153624	.025	.018	Dist.⑧	Flywheel	1100–1200	45	.015C	.023C	124 @ 1 15/16	①
195-GL	153624	.025	.018	Dist.⑧	Flywheel	1100–1200	45	.008C	.022C	124 @ 1 15/16	①
197-DLC	153624	None	None	FP⑧	Flywheel	1350–1400	45	.010C	.020C	124 @ 1 15/16	①
197-DLCS	153624	None	None	FP⑧	Flywheel	1350–1400	45	.008C	.020C	124 @ 1 15/16	①
MZA	153624	.025	.018	Dist.⑧	Flywheel	875–900	45	.009C	.020C	101 @ 1 21/32	①
WAKB	153624	.025	.018	Dist.⑧	Flywheel	2400–2500	②	.018C	.038C	50 @ 3 15/32	56 @ 3 5/32
WAKC	153624	None	None	FP⑧	Flywheel	3500–3600	②	.018C	.038C	50 @ 3 15/32	56 @ 3 5/32
WAKD	153624	None	None	FP⑧	Flywheel	3500–3600	②	.018C	.038C	50 @ 3 15/32	56 @ 3 5/32
WAKDB	153624	None	None	FP⑧	Flywheel	3500–3600	②	.014C	.024C	50 @ 3 15/32	56 @ 3 5/32
WAKDBS	153624	None	None	FP⑧	Flywheel	3500–3600	②	.014C	.024C	50 @ 3 15/32	56 @ 3 5/32
ROILINE											
H540	⑩	.023–.028	.018	TDC	Flywheel	1075–1100	45	.015C	.020C	106 @ 1.6	①
H570	⑩	.023–.028	.018	TDC	Flywheel	1075–1100	45	.015C	.020C	100 @ 1.8	①
H844	⑩	.023–.028	.018	TDC	Pulley	1075–1100	45	.015C	.020C	132 @ 1.8	①
H884	⑩	.023–.028	.018	TDC	Pulley	1075–1100	45	.015C	.020C	150 @ 1.9	①

①—Single spring used.
②—Intake 30°, exhaust 45°.
③—Long 2400–2500, short 1800–1850.
④—With sodium-cooled exhaust valves intake .011C. exhaust .020C.
⑤—Intake valve spring.
⑥—Exhaust valve spring.
⑦—Cap screws with former 3/16″ hole drilled through to be torqued 950–1000. Present hole (3/16 top—1/8 bottom) torque to 1150–1200.
⑧—Engines with degree marks instead of stamped marks on flywheel have timing data noted on engine.
⑨—Valve clearances stamped on WAUKESHA engine name plate for cold settings only.
⑩—1L–4R–4L–2L–3R–3L–2R–1R.

PISTONS, PINS, RINGS, CRANKSHAFT & BEARINGS

Engine Model	Piston Clearance	Wrist Pin Diameter	Ring End Gap (Minimum)		Rod Bearings			Main Bearings		
			Comp.	Oil	Shaft Diameter	Bearing Clearance	Rod Bolt Torque (Oiled) Inch Lbs.	Shaft Diameter	Bearing Clearance	Main Bolt Torque Inch Lbs.
135-DK	.0065	1.50	.015	④	2.999–3.00	.001–.0035	1300–1350	3.249–3.250	.0015–.0045	1500–1600
135-DKB	.0065	1.50	.015	④	2.999–3.000	.001–.0035	1300–1350	3.249–3.250	.0015–.0045	1500–1600
135-DKBS	.0065	1.50	.015	④	2.999–3.000	.001–.0035	1300–1350	3.249–3.250	.0015–3.250	1500–1600
135-GKB	.003	1.50	.015	④	2.999–3.000	.001–.0035	1300–1350	3.249–3.250	.0015–.0045	1500–1600
135-GZ	.003	1.50	.015	④	2.999–3.00	.001–.0035	1300–1350	3.249–3.250	.0015–.0045	1500–1600
135-GZB	.003	1.50	.015	④	2.999–3.000	.001–.0035	1300–1350	3.249–3.250	.0015–.0045	1500–1600
140-GK	.006①	1.375	.030	.015	2.624–2.625	.001–.003	1150–1200	3.249–3.250	.002–.004	1550–1600
140-GKB	.006	1.375	.030	.015	2.624–2.625	.001–.003	1150–1200	3.249–3.250	.002–.004	1550–1600
140-GZ	.006	1.375	.030	.015	2.624–2.625	.001–.003	1150–1200	3.249–3.250	.002–.004	1550–1600
140-GZB	.006	1.375	.030	.015	2.624–2.625	.001–.003	1150–1200	3.249–3.250	.002–.004	1550–1600
145-GK	.007②	1.625	.030	.020	2.999–3.000	.001–.003	800–825	3.499–3.500	.002–.004	3200–3300
145-GKB	.0075	1.625	.030	.020	2.999–3.000	.001–.003	800–825	3.499–3.500	.002–.005	3200–3300
145-GZ	.007	1.625	.030	.020	2.999–3.000	.001–.003	800–825	3.499–3.500	.002–.004	3200–3300
145-GZB	.007	1.625	.030	.020	2.999–3.000	.001–.003	800–825	3.499–3.500	.002–.005	3200–3300
148-DK	.007	1.875	.035	.015	3.374–3.375	.0015–.004	800–825	4.249–4.250	.002–.0047	3500–3600
148-DKB	.007	1.875	.035	.015	3.374–3.375	.0015–.004	800–825	4.249–4.250	.002–.0047	3500–3600
148-DKBS	.007	1.875	.035	.015	3.374–3.375	.0015–.004	800–825	4.249–4.250	.002–.0047	3500–3600
180-DLC	.0045	1.25	.014	.007④	2.249–2.250	.001–.0015	550–600	2.249–2.250	.002–.003	1050–1100
180-GLB	.002	1.25	.010	.007	2.249–2.250	.0005–.0015	525–550	2.249–2.250	.0002–.0032	1050–1100
185-DLC	.0045	1.25	.014	.007④	2.249–2.250	.0005–.0015	550–600	2.249–2.250	.0002–.0032	1050–1100
185-GLB	.002	1.25	.010	.007	2.249–2.250	.0005–.0015	525–550	2.249–2.250	.0002–.0032	1050–1100
190-DLCA	.0045	1.25	.015	.010④	2.624–2.625	.0005–.003	1050–1100	2.624–2.625	.0015–.0045	1300–1350
190-GLB	.0035	1.25	.015	.010	2.4365–2.4375	.0005–.0015	675–700	2.624–2.625	.0005–.0035	1300–1350
195-DLCA	.005	1.25	.015	.010④	2.624–2.625	.0005–.0015	1050–1100	2.624–2.625	.0015–.0045	1300–1350
195-GKA	.0035	1.25	.013	④	2.624–2.625	.0005–.003	675–700	2.624–2.625	.0015–.0045	1300–1350
195-GL	.0045	1.25	.013	④	2.249–2.250	.0005–.0015	1050–1100	2.624–2.625	.0005–.003	1300–1350
197-DLC	.006	1.250	.015	.010④	2.624–2.625	.0005–.003	1050–1100	2.624–2.625	.0015–.0045	1500–1600
197-DLCS	.006	1.250	.015	.010④	2.624–2.625	.0005–.003	1050–1100	2.624–2.625	.0015–.0045	1500–1600
MZA	.004	1.00	.013	.015	2.249–2.250	.001–.003	800–825	2.624–2.625	.0015–.0035	1150–1200
WAKB	.009	1.875	.045	.020	3.374–3.375	.0015–.004	1025–1050	3.999–4.000	.0025–.005	3500–3600
WAKC	.009	1.875	.045	.020	3.374–3.375	.0015–.004	1025–1050	3.999–4.000	.0025–.005	3500–3600
WAKD	.009	2.187	.035	.020	3.749–3.750	.002–.0045	1300–1350	4.749–4.750	.0024–.0058	3500–3600
WAKDB	.009	2.187	.035	.020	3.749–3.750	.002–.0045	1300–1350	4.749–4.750	.0024–.0058	3500–3600
WAKDBS	.009	2.187	.035	.020	3.749–3.750	.002–.0045	1300–1350	4.749–4.750	.0024–.0058	3500–3600
ROILINE										
H540	.002–.0035	1.2499	.012 Min.	.012 Min.	2.748–2.749	.0011–.0036	800–825	3.2481–3.2490	.0014–.0044	1300–1350
H570	.002–.0035	1.2499	.012 Min.	.012 Min.	2.748–2.749	.0011–.0036	800–825	3.2481–3.2490	.0014–.0044	1300–1350
H844	.003–.005	1.4999	.015 Min.	.015 Min.	3.248–3.249	.0013–.0043	1075–1100	3.7480–3.7490	.002–.005	1775–1825
H884	.003–.005	1.4999	.015 Min.	.015 Min.	3.248–3.249	.0013–.0043	1075–1100	3.7480–3.7490	.002–.005	1775–1825

①—For aluminum; cast iron .0045″.
②—For aluminum; cast iron .0055″.
④—U-Flex ring—no gap.

Farm Tractor Specifications

Wheel Type

ALLIS-CHALMERS

TUNE UP SPECIFICATIONS

Tractor Model	Firing Order	Spark Plug Gap	Breaker Gap		Ignition Mark			Valve Lash		Cylinder Head Torque
			Distributor	Magneto	Location	Retarded Timing BTC	Full Advance Timing BTC	Intake	Exhaust	
D-10, D-12③	1243	.025	.022	...	Flywheel	"DC"	"F"	.013H	.013H	80–85
D-10, D-12④	1243	.025	.022	...	Flywheel	"Center"	"F"	.009H	.015H	80–85
D-14	1243	.025	.020	...	Flywheel	Line	"F"	.012H	.014H	80–85
D-15 Gasoline	1243	.025	.020	...	Flywheel	Line	"F"	.009H	.015H	80–85
D-15 Diesel	1342	...	...	...	①	①	①	.010H	.019H	95–100
D-17 Gasoline	1243	.030	.022	...	Flywheel	Line	"F"	.013H	.013H	②
D-17 Diesel	153624	...	...	...	①	①	①	.010H	.019H	95–100

①—For injection timing, the timing lines on cam, governor cage and injection pump housing should be aligned. If not, turn pump housing as required to align marks.

②—½" capscrews 90-95, 7/16" 70-75.

③—Before Serial No. D-10-3501 and D-12-3001.

④—Serial No. D-10-3501 and up, D-12-3001 and up.

PISTONS, PINS, RINGS & CRANKSHAFT

Tractor Model	Piston Clearance	Pin Diam.	Ring End Gap Minimum		Rod Bearings			Main Bearings		
			Comp.	Oil	Crankpin Diameter	Bearing Clearance	Rod Bolt Torque	Journal Diameter	Bearing Clearance	Cap Bolt Torque
D-10, D-12	.0015–.003	.8134	.009	.007	1.9365–1.9375	.001–.003	35–40	2.748–2.749	.002–.004	90–95
D-14	.002–.004	.8134	.007	.007	1.9365–1.9375	.0006–.0027	35–40	2.748–2.749	.002–.004	90–95
D-15	.002–.004	.8134	.007	.007	1.9365–1.9375	.0006–.0027	35–40	2.748–2.749	.002–.004	90–95
D-15 Diesel	.004–.0065	.9996	.009	.009	1.9975–1.9985	.0015–.0035	30–40	2.497–2.498	.0023–.0045	130
D-17	.0025–.0045	.9894	.007	.007	2.374–2.375	.001–.003	45	2.9995–3.000	.0014–.0035	85
D-17 Diesel	.004–.0065	.9996	.009	.009	1.9975–1.9985	.0015–.0035	35–40	2.497–2.498	.0023–.0045	130

J. I. CASE

TUNE UP SPECIFICATIONS

Tractor Model	Firing Order	Spark Plug Gap	Breaker Gap		Ignition Mark			Valve Lash		Cylinder Head Torque
			Distributor	Magneto	Location	Retarded Timing BTC	Full Advance Timing BTC	Intake	Exhaust	
200B	1342	.025	.020	.010	Flywheel	DC	...	.014C	.014C	60–65
300 Gasoline	1342	.025	.020	.010	Flywheel	7/32 (2)	...	.014C	.014C	60–65
300 LP-Gas	1342	.025	.020	.010	Flywheel	3/32 (1)	...	.014C	.014C	60–65
300 Diesel	1342	...	...	...	Flywheel	26° BTC	...	.014C	.014C	70–75
300B Gasoline	1342	.025	.020	.010	Flywheel	(3)	...	.014C	.014C	60–65
300B LP-Gas	1342	.025	.020	.010	Flywheel	3/32 (1)	...	.014C	.014C	60–65
300B Diesel	1342	...	...	...	Flywheel	26° BTC	...	.014C	.014C	70–75
350	1342	.025	.020	.010	Flywheel	IGN	...	.014C	.014C	95–100
400 Gasoline	1342	.025	.020	.010	Pulley	TDC	26° BTC	.012C	.020C	100
400 Diesel	1342	...	...	...	Flywheel	...	27° BTC	.012C	.012C	100
400B Gasoline	1342	.025	.020	.010	Flywheel	(3)	...	.014C	.014C	60–65
400B LP-Gas	1342	.025	.020	.010	Flywheel	3/32 (1)	...	.014C	.014C	60–65
430 Diesel	1342	...	...	...	Flywheel	8° BTC	...	.014C	.014C	95–100
440 Gasoline	1342	.025	.020	...	Flywheel	4° BTC	...	.014C	.014C	60–65
500 Diesel	153624	...	...	...	Pulley	26° BTC	...	.012C	.012C	98–102
500B Gasoline	1342	.025	.020	.010	Flywheel	(3)	...	.014C	.014C	95–100
500B LP-Gas	1342	.025	.020	.010	Flywheel	3/32 (1)	...	.014C	.014C	95–100
530 Diesel	1342	...	...	...	Flywheel	8° BTC	...	.014C	.014C	95–100
540 Gasoline	1342	.025	.020	...	Flywheel	4° BTC	...	.014C	.014C	95–100
600 LP-Gas	153624	.025	...	.010	Pulley	3° BTC	23° BTC	.012C	.020C	98–102
600 Diesel	153624	...	...	...	Pulley	28° BTC	...	.012C	.012C	98–102
600B Gasoline	1342	.025	.020	.010	Flywheel	(3)	...	.014C	.014C	95–100
600B LP-Gas	1342	.025	.020	.010	Flywheel	3/32" (1)	...	.014C	.014C	95–100
630 Diesel	1342	...	...	...	Flywheel	8° BTC	...	.014C	.014C	95–100
640 Gasoline	1342	.025	.020	...	Flywheel	4° BTC	...	.014C	.014C	95–100
700B Gasoline	1342	.025	.020	.010	Pulley	TDC	26° BTC	.012C	.020C	100
700B Diesel	1342	...	...	...	Pulley	27° BTC	...	.012C	.012C	100
730(C) Diesel	1342	...	...	...	Pulley	33° BTC	...	.025C	.025C	
740(C) Gasoline	1342	.025	.020	...	Pulley	5° BTC	27° BTC	.015C	.025C	
740(C) LP-Gas	1342	.020	.020	...	Pulley	5° BTC	27° BTC	.015C	.025C	
800B Gasoline	1342	.025	.020	.010	Pulley	TDC	(4)	.012C	.020C	100
800B Diesel	1342	...	...	...	Pulley	31° BTC	...	.012C	.012C	100
830(C) Diesel	1342	...	...	...	Pulley	29° BTC	...	.025C	.025C	
840(C) Gasoline	1342	.025	.020	...	Pulley	2° ATC	30° BTC	.015C	.025C	
840(C) LP-Gas	1342	.020	.020	...	Pulley	2° BTC	34° BTC	.015C	.025C	
900B LP-Gas	153624	.025	.020	.010	Pulley	(5)	(6)	.012C	.020C	98–102
900B Diesel	153624	...	...	...	Pulley	(7)	...	.012C	.012C	98–102
930 Diesel	153624	...	...	...	Pulley	29° BTC	...	.012C	.012C	
940	153624	.025	.020	...	Pulley	...	24° BTC	.015C	.015C	

(1)—Before IGN mark.
(2)—Before DC mark.
(3)—With distributor IGN, with magneto DC.
(4)—Auto-Lite 26° BTC, Wico 28° BTC.
(5)—With distributor 2° BTC, with magneto 3° BTC.
(6)—With distributor 26° BTC, with magneto 23° BTC.
(7)—PES pump 31° BTC, PSB pump 28° BTC.

PISTONS, PINS, RINGS & CRANKSHAFT

Tractor Model	Piston Clearance	Pin Diam.	Ring End Gap Minimum		Rod Bearings			Main Bearings		
			Comp.	Oil	Crankpin Diameter	Bearing Clearance	Rod Bolt Torque	Journal Diameter	Bearing Clearance	Cap Bolt Torque
200B	.003	.8592	.010	.010	1.9365–1.9375	.0015–.002	45–50	2.249–2.250	.0015–.002	95
300 Diesel	.004	1.1251	.010	.010	2.0615–2.0625	.0006–.0031	45–50	2.374–2.375	.0009–.0036	90
300 Gas	.003	.8592	.010	.010	1.9365–1.9375	.0015–.002	35–40	2.249–2.250	.0015–.002	95
300B Diesel	.004	1.1251	.010	.010	2.0615–2.0625	.0006–.0031	45–50	2.374–2.375	.0009–.0036	90
300B Gas	.003	.8592	.010	.010	1.9365–1.9375	.0015–.002	35–40	2.249–2.250	.0015–.002	95
350	.003	.9990	.010	.010	2.0605–2.0615	.0015–.002	45–50	2.623–2.624	.0015–.002	95
400 Gas	.004	1.3584	.013	.013	2.748–2.749	.0015–.0036	100	2.249–2.250	.002–.0046	150
400 Diesel	.004	1.3584	.013	.013	2.748–2.749	.0013–.0038	100	2.998–2.999	.0016–.0046	150
400B	.003	.8592	.010	.010	2.0605–2.0615	.0015–.002	45–50	2.623–2.624	.0015–.002	95
430	.004	1.2498	.010	.015	2.0605–2.0615	.001–.0035	45–50	2.873–2.874	.0008–.0038	95
440	.003	.8592	.010	.010	2.0605–2.0615	.0015–.002	45–50	2.623–2.624	.0015–.002	95
500	.004	1.3584	.013	.013	2.748–2.749	.0013–.0038	100	2.998–2.999	.0016–.0046	150
500B	.003	.9990	.010	.010	2.0605–2.0615	.0015–.002	45–50	2.623–2.624	.0015–.002	95
530	.004	1.2498	.010	.015	2.0605–2.0615	.001–.0035	45–50	2.873–2.874	.0008–.0038	95
540	.003	.9994	.010	.010	2.0605–2.0615	.0005–.0025	45–50	2.623–2.624	.0015–.002	95
600 Diesel	.005	1.3584	.013	.010	2.748–2.749	.0013–.0038	100	2.998–2.999	.0016–.0046	150
600 Gas	.004	1.3584	.013	.010	2.748–2.749	.0015–.0036	100	2.998–2.999	.0016–.0046	150
600B	.003	.9990	.010	.010	2.0605–2.0615	.0015–.002	45–50	2.623–2.624	.0015–.002	95
630	.004	1.2498	.010	.015	2.0605–2.0615	.001–.0035	45–50	2.873–2.874	.0008–.0038	95
640	.004	.9994	.018	.010	2.0605–2.0615	.001–.002	45–50	2.873–2.874	.0008–.0038	95
700B Gas	.004	1.3584	.013	.010	2.748–2.749	.0013–.0038	100	2.998–2.999	.0016–.0046	150
700B Diesel	.005	1.3584	.013	.010	2.748–2.749	.0013–.0038	100	2.998–2.999	.0016–.0046	150
730, 730C	.005	1.3584	.013	.010	2.748–2.749	.0013–.0038	100	2.998–2.999	.0016–.0046	150
740, 740C	.004	1.3584	.013	.010	2.748–2.749	.0015–.0036	100	2.998–2.999	.002–.0046	150
800B Diesel	.005	1.3584	.013	.010	2.748–2.749	.0013–.0038	100	2.998–2.999	.0016–.0046	150
800B Gas	.004	1.3584	.013	.010	2.748–2.749	.0015–.0036	100	2.998–2.999	.0016–.0046	150
830, 830C	.005	1.4994	.013	.015	2.748–2.749	.0013–.0038	100	2.998–2.999	.0016–.0046	150
840, 840C	.004	1.3584	.013	.015	2.748–2.749	.0015–.0036	100	2.998–2.999	.002–.0046	150
900B Diesel	.005	1.3584	.014	.010	2.748–2.749	.0013–.0038	100	2.998–2.999	.0016–.0046	150
900B Gas	.004	1.3584	.014	.010	2.748–2.749	.0015–.0036	100	2.998–2.999	.0016–.0046	150
930	.005	1.3584	.013	.010	2.748–2.749	.0013–.0038	100	2.998–2.999	.0016–.0046	150
940	.005	1.3584	.013	.010	2.748–2.749	.0015–.0036	100	2.998–2.999	.002–.0046	150

JOHN DEERE

TUNE UP SPECIFICATIONS

Tractor Model	Firing Order	Spark Plug Gap	Breaker Gap		Ignition Mark			Valve Lash		Cylinder Head Torque
			Distributor	Magneto	Location	Retarded Timing BTC	Full Advance Timing BTC	Intake	Exhaust	
40	1–2	.025	.022	...	Flywheel	3° BTC	25° BTC	.012C	.012C	105
50 Gasoline	1–2	.030	.022	...	Flywheel	5°	20°	.020H	.020H	104
50 All Fuel	1–2	.030	.022	...	Flywheel	TDC	25°	.020H	.020H	104
50 LP-Gas	1–2	.030	.022	...	Flywheel	5°	10°	.020H	.020H	104
60 Gasoline	1–2	.030	.022	...	Flywheel	5°	20°	.020H	.020H	150
60 All Fuel	1–2	.030	.022	...	Flywheel	TDC	25°	.020H	.020H	150
60 LP-Gas	1–2	.030	.022	...	Flywheel	10°	5°	.020H	.020H	150
70 Gasoline	1–2	.030	.022	...	Flywheel	10°	15°	.020H	.020H	208
70 All Fuel	1–2	.030	.022	...	Flywheel	TDC	25°	.020H	.020H	208
70 LP-Gas	1–2	.030	.022	...	Flywheel	10°	5°	.020H	.020H	208
80 Diesel	1–2	...	...	...	Flywheel	No. 1 Inj.	...	.015H	.020H	275
320, 330	1–2	.025	.022	...	Flywheel	3°	31°	.012C	.012C	105

TUNE UP SPECIFICATIONS continued

Tractor Model	Firing Order	Spark Plug Gap	Breaker Gap		Ignition Mark			Valve Lash		Cylinder Head Torque
			Distributor	Magneto	Location	Retarded Timing BTC	Full Advance Timing BTC	Intake	Exhaust	
420, 430	1–2	.025	.022	...	Flywheel	2°	28°	.015C	.015C	90
435 Diesel	1–2	...	...	...	①	①	①	...	.009H	175
440 Gasoline	1–2	.025	.022	...	Flywheel	2°	28°	.015C	.015C	90
440 Diesel	1–2	...	...	...	①	①	①	...	.012C	
520, 530	1–2	.030	.022	...	Flywheel	TDC	20°	.020H	.020H	104
620, 630	1–2	.030	.022	...	Flywheel	TDC	20°	.020H	.020H	150
720, 730 Gasoline	1–2	.030	.022	...	Flywheel	TDC	20°	.020H	.020H	275
720, 730 Diesel	1–2	...	...	...	Flywheel	No. 1 Inj.	...	.020H	.020H	275
820, 830	1–2	...	...	...	Flywheel	No. 1 Inj.	...	.015H	.020H	275
1010 Gasoline	1342	.025	.022	...	Flywheel	2°	28°	.012C	.018C	
1010 Diesel	1342	...	...	...	Flywheel	TDC	...	.012C	.018C	
2010 Gasoline	1342	.025	.022	...	Flywheel	2°	28°	.012C	.018C	
2010 Diesel	1342	...	...	...	Flywheel	TDC	...	.012C	.018C	
3010 Gasoline	1342	.025	.022	...	Flywheel	TDC	20°	.015C	.028C	
3010 Diesel	1342	...	...	...	...	TDC	10°	.018C	.018C	
4010 Gasoline	153624	.025	.022	...	Flywheel	TDC	20°	.015C	.028C	
4010 LP-Gas	153624	.015	.022	...	Flywheel	TDC	25°	.015C	.028C	
4010 Diesel	153624	...	...	...	...	TDC	14°	.018C	.018C	
4401 Diesel	1–2	...	...	...	①	①	①	.009H	.009H	175

①—Timed at full injector using gauge provided by General Motors.

PISTONS, PINS, RINGS & CRANKSHAFT

Tractor Model	Piston Clearance	Pin Diam.	Ring End Gap Minimum		Rod Bearings			Main Bearings		
			Comp.	Oil	Crankpin Diameter	Bearing Clearance	Rod Bolt Torque	Journal Diameter	Bearing Clearance	Cap Bolt Torque
40	.005	1.1878	.013	.013	2.498–2.499	.001–.0035	55–60	2.397–2.398	.001–.0035	140
50	.0075	1.4167	①	①	2.7492	.001–.004	85	⑧	.004–.006	100
60	.007	1.7497	①	①	2.99925	.001–.004	105	⑨	.004–.006	150
70	.008	1.7498	①	①	3.3743	.001–.004	85	3.2495	.0045–.0065	150
80	.010	2.3547	①	①	3.9991–4.0005	.0015–.0049	210	4.4975–4.4985	④	...
320, 330	.004	1.1878	.013	.010	2.498–2.499	.001–.0035	55–60	2.397–2.398	.001–.0035	140
420, 430	.004	1.1878	.013	.013	2.498–2.499	.001–.0035	55–60	2.397–2.398	.001–.0035	140
435	.0057	1.3748	.020	.010	2.499–2.500	.0044–.0084	40–45	2.999–3.000	.002–.004	125
440 Gas.	.004	1.1878	.013	.013	2.498–2.499	.001–.0035	55–60	2.397–2.398	.001–.0035	140
440 Diesel	.0037		.020	.010	2.499–2.500	.0044–.0084	40–45	2.999–2.300	.002–.004	125
520, 530	.0057	1.4168	①	①	2.874–2.875	.001–.004	85	2.8735–2.8745	.004–.006	...
620, 630	.006	1.7497	①	①	3.3736–3.375	.0011–.0041	105	②	③	...
720, 730 Gas.	.008	2.3547	①	①	3.748–3.749	.002–.005	85	4.4975–4.4985	④	...
720, 730 Diesel	.010	2.3547	①	①	3.748–3.749	.002–.005	208	4.4975–4.4985	④	...
820, 830	.010	2.3547	①	①	3.9991–4.0005	.0015–.0049	210	4.4975–4.4985	④	...
1010 Gas.	.003		.010	.010	2.3085–2.3095	.0014–.004	40–45	2.9974–2.9984	.0016–.0046	145
1010 Diesel	.0055		.010	.010	2.3085–2.3095	.0014–.004	40–45	2.9974–2.9984	.0016–.0028	145
2010 Gas.	.003		.010	.010	2.3085–2.3095	.0014–.004	40–45	2.9974–2.9984	.0016–.0046	145
2010 Diesel	.0055		.010	.010	2.3085–2.3095	.0014–.004	40–45	2.9974–2.9984	.0016–.0046	145
3010 Gas.	.006⑤		.013	.013	2.9985–2.9995	.0015–.0045	105	3.3720–3.3730	.0031–.0061	150
3010 Diesel	⑥		.013	.013	2.9985–2.9995	.0015–.0045	125	3.3720–3.3730	.0031–.0061	150
4010 Gas.	.007⑤		.015	.015	2.9980–2.9990	.0015–.0045	105	3.3730–3.3740	.0031–.0061	150
4010 Diesel	⑦		.015	.015	2.9980–2.9990	.0015–.0045	125	3.3730–3.3740	.0031–.0061	150
4401 Diesel	.0057	1.3748	.020	.010	2.499–2.500	.0044–.0084	45–50	2.999–3.000	.002–.004	125

①—Rings are provided with proper gap by supplier.
②—Right 3.999–3.400, left 2.749–2.750.
③—Right .005–.007, left .004–.006.
④—Right and left .006–.008, center .0021–.0055.
⑤—Thrust side.
⑥—Thrust side .006, anti-thrust side .020.
⑦—Thrust side .0065, anti-thrust side .017.
⑧—Right 2.624, left 2.249.
⑨—Right 2.9995, left 2.7495.

FORD

TUNE UP SPECIFICATIONS

Tractor Model	Firing Order	Spark Plug Gap	Breaker Gap		Ignition Mark			Valve Lash		Cylinder Head Torque
			Distributor	Magneto	Location	Retarded Timing BTC	Full Advance Timing BTC	Intake	Exhaust	
501 Gasoline	1243	.027	.025	...	Flywheel	4°	20°	.015H	.015H	65–70
501 LP-Gas	1243	.027	.025	...	Flywheel	11°	33°	.015H	.015H	65–70
501 Diesel	1243	...	...	...	Flywheel	18°	...	.015H	.015H	100
600 Gasoline	1243	.027	.025	...	Flywheel	8°	30°	.015H	.015H	65–70
600 LP-Gas	1243	.030	.025	...	Flywheel	11°	33°	.015H	.015H	65–70
601 Gasoline	1243	.027	.025	...	Flywheel	4°	20°	.015H	.015H	65–70
601 LP-Gas	1243	.030	.025	...	Flywheel	11°	33°	.015H	.015H	65–70
601 Diesel	1243	...	...	...	Flywheel	18°	...	.015H	.015H	100
700 Gasoline	1243	.027	.025	...	Flywheel	8°	30°	.015H	.015H	65–70
700 LP-Gas	1243	.030	.025	...	Flywheel	11°	33°°	.015H	.015H	65–70
701 Gasoline	1243	.027	.025	...	Flywheel	4°	20°	.015H	.015H	65–70
701 LP-Gas	1243	.030	.025	...	Flywheel	11°	33°	.015H	.015H	65–70
701 Diesel	1243	...	...	...	Flywhee!	18°	...	.015H	.015H	100
800 Gasoline	1243	.027	.025	...	Flywheel	5°	27°	.015H	.015H	65–70
800 LP-Gas	1243	.030	.025	...	Flywheel	8°	30°	.015H	.015H	65–70
801 Gasoline	1243	.027	.025	...	Flywheel	4°	20°	.015H	.015H	65–70
801 LP-Gas	1243	.030	.025	...	Flywheel	8°	30°	.015H	.015H	65–70
801 Diesel	1243	...	...	...	Flywheel	18°	...	.015H	.015H	100
900 Gasoline	1243	.027	.025	...	Flywheel	5°	27°	.015H	.015H	65–70
900 LP-Gas	1243	.030	.025	...	Flywheel	8°	30°	.015H	.015H	65–70
901 Gasoline	1243	.027	.025	...	Flywheel	4°	20°	.015H	.015H	65–70
901 LP-Gas	1243	.030	.025	...	Flywheel	8°	30°	.015H	.015H	65–70
901 Diesel	1243	...	...	...	Flywheel	18°	...	.015H	.015H	100
1801 Gasoline	1243	.027	.025	...	Flywheel	4°	20°	.015H	.015H	65–70
1801 Diesel	1243	...	...	...	Flywheel	18°	...	.015H	.015H	100
2000 Gasoline	1243	.027	.025	...	Flywheel	8°	20°	.015H	.015H	65–70
2000 Diesel	1243	...	...	...	Flywheel	18°	...	.015H	.015H	100–105
4000 Gasoline	1243	.027	.025	...	Flywheel	5°	20°	.015H	.015H	65–70
4000 Diesel	1243	...	...	...	Flywheel	18°	...	.015H	.015H	100–105
4040 Gasoline	1243	.027	.025	...	Flywheel	5°	20°	.015H	.015H	65–70
4040 Diesel	1243	...	...	...	Flywheel	18°	...	.015H	.015H	100–105
6000 Gasoline	153624	.030	.025	...	Damper	4°	24°	.015H	.015H	
6000 Diesel	153624	...	...	...	Damper	26°	...	.015H	.015H	

PISTONS, PINS, RINGS & CRANKSHAFT

Tractor Model	Piston Clearance	Pin Diam.	Ring End Gap Minimum		Rod Bearings			Main Bearings		
			Comp.	Oil	Crankpin Diameter	Bearing Clearance	Rod Bolt Torque	Journal Diameter	Bearing Clearance	Cap Bolt Torque
501, 600 Gas.	.003	.9122	.010	.010	2.2978–2.2988	.0004–.002	45–50	2.4974–2.4988	.0007–.0023	100–105
501, 601 Diesel	.007	1.1242	.010	.010	2.2978–2.2988	.0004–.002	45–50	2.4974–2.4988	.0007–.0023	100–105
601 Gas.	.003	.9122	.010	.010	2.2978–2.2988	.0004–.002	45–50	2.4974–2.4988	.0007–.0023	100–105
700, 701 Gas.	.003	.9122	.010	.010	2.2978–2.2988	.0004–.002	45–50	2.4974–2.4988	.0007–.0023	100–105
701 Diesel	.007	1.1242	.010	.010	2.2978–2.2988	.0004–.002	45–50	2.4974–2.4988	.0007–.0023	100–105
800, 801 Gas.	.003	.9122	.010	.010	2.2978–2.2988	.0004–.002	45–50	2.4974–2.4988	.0007–.0023	100–105
801 Diesel	.007	1.2492	.010	.010	2.2978–2.2988	.0004–.002	45–50	2.4974–2.4988	.0007–.0023	100–105
900, 901 Gas.	.003	.9122	.010	.010	2.2978–2.2988	.0004–.002	45–50	2.4974–2.4988	.0007–.0023	100–105
901 Diesel	.007	1.2492	.010	.010	2.2978–2.2988	.0004–.002	45–50	2.4974–2.4988	.0007–.0023	100–105
1801 Gas.	.003	.9122	.010	.010	2.2978–2.2988	.0004–.002	45–50	2.4974–2.4988	.0007–.0023	100–105

Tractor Model	Piston Clearance	Pin Diam.	Ring End Gap Minimum		Rod Bearings			Main Bearings		
			Comp.	Oil	Crankpin Diameter	Bearing Clearance	Rod Bolt Torque	Journal Diameter	Bearing Clearance	Cap Bolt Torque
1801 Diesel	.007	1.2492	.010	.010	2.2978–2.2988	.0004–.002	45–50	2.4974–2.4988	.0007–.0023	100–105
2000 Gas.	.003		.010	.010	2.2978–2.2988	.0004–.002	45–50	2.4974–2.4988	.0007–.0023	100–105
2000 Diesel	.007		.010	.010	2.2978–2.2988	.0004–.002	45–50	2.4974–2.4988	.0007–.0023	100–105
4000 Gas.	.003		.010	.010	2.2978–2.2988	.0004–.002	45–50	2.4974–2.4988	.0007–.0023	100–105
4000 Diesel	.007		.010	.010	2.2978–2.2988	.0004–.002	45–50	2.4974–2.4988	.0007–.0023	100–105
4040 Gas.	.003		.010	.010	2.2978–2.2988	.0004–.002	45–50	2.4974–2.4988	.0007–.0023	100–105
4040 Diesel	.007		.010	.010	2.2978–2.2988	.0004–.002	45–50	2.4974–2.4988	.0007–.0023	100–105
6000 Gas.	.0015		.010	.010	2.2980–2.2988	.0024–.006	45–50	2.4963–2.4971	.0021–.0039	100
6000 Diesel	.005		010	.010	2.2980–2.2988	.0024–.006	45–50	2.4963–2.4971	.0021–.0039	100

INTERNATIONAL HARVESTER

TUNE UP SPECIFICATIONS

Tractor Model	Firing Order	Spark Plug Gap	Breaker Gap		Ignition Mark			Valve Lash		Cylinder Head Torque
			Distributor	Magneto	Location	Retarded Timing BTC	Full Advance Timing BTC	Intake	Exhaust	
100	1342	.023	.020	.013	Pulley	3rd Notch	30° (1)	.014H	.014H	65
130	1342	.023	.020	.013	Pulley	4th Notch	26° (1)	.014H	.014H	65
140	1342	.023	.020	.013	Pulley	DC	22° (1)	014H	.014H	65
200	1342	.023	.020	.013	Pulley	3rd Notch	30° (1)	.014H	.014H	65
230	1342	.023	.020	.013	Pulley	4th Notch	30° (1)	.014H	.014H	65
240	1342	.023	.020	.013	Pulley	DC	30° (1)	.014H	.014H	65
B275	1342	...	...	...	Pulley	16°	...	.020H	.020H	70
300	1342	.023	.020	...	Pulley	Last Notch	(4)	.017H	.017H	70
300 HC	1342	.023	.020	...	Pulley	Last Notch	(4)	.017H	.017H	70
300 Utility	1342	.023	.020	.013	Pulley	Last Notch	(4)	.017H	.017H	70
330	1342	.023	.020	...	Pulley	TDC	30°	.014H	.014H	65
340 Gas	1342	.023	.020	...	Pulley	TDC	30°	.014H	.014H	65
340 Diesel	1342	...	...	...	Pulley	3°ATC	1°	.027H	.027H	115
350	1342	.023	.020	...	Pulley	Last Notch	(4)	.017H	.017H	70
350 HC	1342	.023	.020	...	Pulley	Last Notch	(4)	.017H	.017H	70
350 Diesel	1342	...	...	...	Pulley	1st Notch	...	.014H	.014H	70
350 Utility	1342	.023	.020	.013	Pulley	Last Notch	(4)	.017H	.017H	70
400 Gas	1342	.023	.020	...	Pulley	Last Notch	(5)	.017H	.017H	110
400 Diesel	1342	...	...	...	Pulley	Last Notch	...	.017H	.017H	120
400 HC Gas	1342	.023	.020	...	Pulley	Last Notch	(5)	.017H	.017H	110
400 HC Diesel	1342	...	...	...	Pulley	Last Notch	...	.017H	.017H	120
404	1342	.023	.020	...	Pulley	DC	20°	.014H	.020H	80–90
W400 Gas	1342	.023	.020	...	Pulley	Last Notch	(5)	.017H	.017H	110
W400 Diesel	1342	...	...	...	Pulley	Last Notch	...	.017H	.017H	120
450 Gas	1342	.023	.020	...	Pulley	Last Notch	(5)	.017H	.017H	110
450 Diesel	1342	...	...	...	Pulley	Last Notch	...	.017H	.017H	120
450 HC Gas.	1342	.023	.020	...	Pulley	Last Notch	(5)	.017H	.017H	110
450 HC Diesel	1342	...	...	...	Pulley	Last Notch	...	.017H	.017H	120
W450 Gas.	1342	.023	.020	...	Pulley	Last Notch	(5)	.017H	.017H	110
W450 Diesel	1342	...	...	...	Pulley	Last Notch	...	.017H	.017H	120
460, 560 Gas.	153624	(2)	.021	...	Pulley	2°	(3)	.027H	.027H	90
460, 560 Diesel	153624	...	...	...	Pulley	3°	25°	.027H	.027H	115
600, 650 Gas	1342	.023	.020	.013	Pulley	TDC	40°	.017H	.017H	160
600, 650 Diesel	1342	...	...	...	Pulley	TDC	8°	.017H	.017H	150
660 Gas.	153624	(2)	.021	...	Pulley	2°	(3)	.027H	.027H	90
660 Diesel	153624	...	...	...	Pulley	TDC	8°	.027H	.027H	115
2404	1342	.023	.020	...	Pulley	DC	20°	.014H	.020H	80–90

(1)—Magneto running timing 35°.
(2)—Gasoline .025″, LP-Gas .016″.
(3)—Gasoline 30°, LP-Gas 25°.
(4)—Kerosene 30°, gasoline 22°, LP-Gas 16°.
(5)—Kerosene 30°, gasoline 25°, LP-Gas 16°.

PISTONS, PINS, RINGS & CRANKSHAFT

Tractor Model	Piston Clearance	Pin Diam.	Ring End Gap Minimum		Rod Bearings			Main Bearings		
			Comp.	Oil	Crankpin Diameter	Bearing Clearance	Rod Bolt Torque	Journal Diameter	Bearing Clearance	Cap Bolt Torque
100, 130, 140	.0015	.9193	.010	.010	1.749–1.750	.001–.0035	45	2.124–2.125	.001–.0035	75
200, 230, 240	.0015	.9193	.010	.010	1.749–1.750	.001–.0035	45	2.124–2.125	.001–.0035	75
B275	.0052	1.1022	.012	.015	1.749–1.750	.0015–.0034	30–35	2.124–2.125	.0011–.0041	75
300, 300U①	.0035	1.1090	.010	.010	2.2975–2.2985	.0011–.0037	40	2.5575–2.5585	.0011–.0037	75
300, 300U②	.0025	.8748	.010	.010	2.2975–2.2985	.0011–.0037	40	2.5575–2.5585	.0011–.0037	75
330, 340	.0015	.9193	.010	.010	1.749–1.750	.001–.0035	45	2.124–2.125	.001–.0035	75
340 Diesel	.0045	1.1248	.015	.010	2.373–2.374	.0007–.0015	50	2.748–2.749	.0012–.0042	80
350, 350U	.0025	.8748	.010	.010	2.2975–2.2985	.0011–.0037	40	2.5575–2.5585	.0011–.0037	75
350 Diesel	.005	1.1092	.015	.010	2.2475–2.2485	.0006–.0031	40	2.374–2.375	.0009–.0036	105
400, W400①	.0035	1.3126	.013	.013	2.5475–2.5485	.0011–.0037	55–60	2.8075–2.8085	.002–.003	100
400, W400②	.003	.9998	.013	.013	2.5475–2.5485	.0011–.0037	55–60	2.8075–2.8085	.002–.003	100
400D, W400D	.005	1.3126	.015	.010	3.2485–3.2495	.002–.003	115	3.7475–3.7485	.0018–.0048	③
404	.0015	.8592	.010	.010	1.7495	.0009–.0039	45	2.1245	.0009–.0039	75–80
450, W450	.003	.9998	.013	.013	2.5475–2.5485	.0011–.0037	55–60	2.8075–2.8085	.002–.003	100
450D, W450D	.005	1.3126	.015	.010	3.2475–3.2485	.002–.003	115	3.7475–3.7485	.0018–.0048	③
460, 560	.0025	.8748	.010	.010	2.373–2.374	.0009–.0034	50	2.748–2.749	.0012–.0042	80
460D, 560D	.005	1.1248	.015	.010	2.373–2.374	.0009–.0034	50	2.748–2.749	.0012–.0042	80
600, 650	.004	1.5001	.012	.012	2.9965–2.9975	.002–.005	85–90	3.2475–3.2485	.0019–.0049	125
600D, 650D	.008	1.5001	.013	.013	2.7475–2.7485	.0019–.0049	55–60	4.1225–4.1235	.002–.005	③
660	.0025	.8748	.010	.010	2.373–2.374	.0009–.0034	50	2.748–2.749	.0012–.0042	80
660D	.005	1.1248	.015	.010	2.373–2.374	.0009–.0034	50	2.748–2.749	.0012–.0042	80
2404	.0015	.8592	.010	.010	1.7495	.0009–.0039	45	2.1245	.0009–.0039	75–80

①—Heavyweight. ②—Lightweight. ③—Center 260 ft. lbs., others 160 ft. lbs.

MASSEY-FERGUSON

TUNE UP SPECIFICATIONS

Tractor Model	Firing Order	Spark Plug Gap	Breaker Gap		Ignition Mark			Valve Lash		Cylinder Head Torque
			Distributor	Magneto	Location	Retarded Timing BTC	Full Advance Timing BTC	Intake	Exhaust	
MF-35 Gas.	1342	.025	.022	...	Flywheel	5°	...	.013H	.013H	70–75
MF-35 Diesel	123	...	...	...	Flywheel	18°	...	.010H	.010H	100
TO-35 Gas.	1342	.025	.022	...	Flywheel	5°	...	.013H	.013H	70–75
TO-35 Diesel	1342	...	...	...	Flywheel	①	...	.012C	.008C	50–60
F-40	1342	.025	.022	...	Flywheel	5°	...	.013H	.013H	70–75
MF-50	1342	.025	.022	...	Flywheel	5°	...	.013H	.013H	70–75
MH-50	1342	.025	.022	...	Flywheel	5°	...	.013H	.013H	70–75
MF-65 Gas.	1342	.026	.022	...	Flywheel	5°	...	.016H	.018H	70–75
MF-65 Diesel	1342	...	...	...	Flywheel	18°	...	.010H	.010H	55–60
MF-85 Gas.	1342	.026	.022	...	Flywheel	5°	...	.016H	.018H	105
MF-85 Diesel	1342	...	...	...	Flywheel	20°	...	.014H	.014H	②
MF-88 Gas.	1342	.026	.022	...	Flywheel	5°	...	.016H	.018H	105
MF-88 Diesel	1342	...	...	...	Flywheel	20°	...	.014H	.014H	②
MF-202	1342	.025	.022	...	Flywheel	5°	...	.013H	.013H	70–75
MHF-202	1342	.025	.022	...	Flywheel	5°	...	.013H	.013H	70–75
MF-204	1342	.025	.022	...	Flywheel	5°	...	.013H	.013H	70–75
MF-303 Gas.	1342	.025	.020	...	Flywheel	DC	18°	.014H	.014H	105
MF-303 Diesel	1342	...	...	...	Flywheel	22°	...	.014H	.014H	105
MH-333 Gas.	1342	.025	.020	...	Flywheel	DC	18°	.014H	.014H	105
MH-333 LP-Gas.	1342	.025	.020	...	Flywheel	DC	18°	.016H	.016H	105
MH-333 Diesel	1342	...	...	...	Flywheel	22°	...	.014H	.014H	105

TUNE UP SPECIFICATIONS continued

Tractor Model	Firing Order	Spark Plug Gap	Breaker Gap		Ignition Mark			Valve Lash		Cylinder Head Torque
			Distributor	Magneto	Location	Retarded Timing BTC	Full Advance Timing BTC	Intake	Exhaust	
MF-404 Gas.	1342	.025	.020	...	Flywheel	DC	18°	.014H	.014H	135
MF-404 Diesel	1342	...	...	...	Flywheel	③	...	.014H	.014H	135
MF-406 Gas.	1342	.025	.020	...	Flywheel	DC	18°	.014H	.014H	105
MF-406 Diesel	1342	...	...	...	Flywheel	22°	...	.014H	.014H	105
MH-444 Gas.	1342	.025	.020	...	Flywheel	DC	18°	.014H	.014H	135
MH-444 LP-Gas.	1342	.025	.020	...	Flywheel	DC	16°	.016H	.016H	135
MH-444 Diesel	1342	...	...	...	Flywheel	③	...	.014H	.014H	135
MH-555 Gas.	1342	.025	.020	...	Flywheel	DC	16°	.014H	.014H	135
MH-555 LP-Gas	1342	.025	.020	...	Flywheel	DC	16°	.016H	.016H	135
MH-555 Diesel	1342	...	...	...	Flywheel	③	...	.014H	.014H	135
MF-1001 Gas.	1342	.025	.020	...	Flywheel	DC	18°	.014H	.014H	105
MF-1001 Diesel	1342	...	...	...	Flywheel	22°	...	.014H	.014H	105

①—Injection pump without automatic advance 17° BTC, with automatic advance 13° BTC.
②—9/16″ studs 135 ft. lbs., 3/8″ studs 35–40 ft. lbs.
③—APE injection pump 32½° BTC, PSB pump 25° BTC.

PISTONS, PINS, RINGS & CRANKSHAFT

Tractor Model	Piston Clearance	Pin Diam.	Ring End Gap Minimum		Rod Bearings			Main Bearings		
			Comp.	Oil	Crankpin Diameter	Bearing Clearance	Rod Bolt Torque	Journal Diameter	Bearing Clearance	Cap Bolt Torque
MF-35 Gas.	.0012	.8592	.010	.010	1.9365–1.9375	.0015–.0025	35–40	2.249–2.250	.0015–.0025	90
MF-35 Diesel	...	1.250	.009	.013	2.2485–2.2490	.002–.0035	70–80	2.7485–2.7490	.0025–.0045	115
TO-35 Gas.	.0012	.8592	.010	.010	1.9365–1.9375	.0015–.0025	35–40	2.249–2.250	.0015–.0025	90
TO-35 Diesel	.004	1.1249	.009	.018	2.3110–2.3115	.002–.0035	65–70	2.7515–2.7520	.002–.0035	①
F-40	.0012	.8592	.010	.010	1.9365–1.9375	.0015–.0025	35–40	2.249–2.250	.0015–.0025	90
MF-50	.0012	.8592	.010	.010	1.9365–1.9375	.0015–.0025	35–40	2.249–2.250	.0015–.0025	90
MH-50	.0012	.8592	.010	.010	1.9365–1.9375	.0015–.0025	35–40	2.249–2.250	.0015–.0025	90
MF-65 Gas.	.002	1.1251	.010	.010	2.0615–2.0625	.0007–.0027	35–40	2.374–2.375	.0005–.0027	90
MF-65 Diesel	...	1.2498	.009	.009	2.2485–2.2490	.002–.0035	70–80	2.7485–2.7490	.0025–.0045	115
MF-85 Gas.	.003	1.1092	...	...	2.248–2.249	.0014–.0024	70–75	2.624–2.625	.0005–.0027	90
MF-85 Diesel	.004	1.2498	...	...	2.7475–2.7485	.0013–.0038	85–95	2.873–2.874	.0015–.0035	135
MF-88 Gas.	.003	1.1092	...	...	2.248–2.249	.0014–.0024	70–75	2.624–2.625	.0005–.0027	90
MF-88 Diesel	.004	1.2498	...	...	2.7475–2.7485	.0013–.0038	85–95	2.873–2.874	.0015–.0035	135
MF-202	.0012	.8592	.010	.010	1.9365–1.9375	.0015–.0025	35–40	2.249–2.250	.0015–.0025	90
MHF-202	.0012	.8592	.010	.010	1.9365–1.9375	.0015–.0025	35–40	2.249–2.250	.0015–.0025	90
MF-204	.0012	.8592	.010	.010	1.9365–1.9375	.0015–.0025	35–40	2.249–2.250	.0015–.0025	90
MF-303 Gas.	.003	1.1092	.013	.013	2.248–2.249	.0008–.0029	75–85	2.624–2.625	.0005–.0032	90
MF-303 Diesel	.004	1.1092	.013	.010	2.248–2.249	.0008–.0029	75–85	2.624–2.625	.0005–.0032	90
MH-333 Gas.	.003	1.1092	.013	.013	2.248–2.249	.0008–.0029	75–85	2.624–2.625	.0005–.0032	90
MH-333 Diesel	.004	1.1092	.013	.010	2.248–2.249	.0008–.0029	75–85	2.624–2.625	.0005–.0032	90
MF-404 Gas.	.003	1.2499	.013	.013	2.498–2.500	.0005–.0025	85–95	2.873–2.874	.0015–.0035	105
MF-404 Diesel	.004	1.2499	.007	.007	2.498–2.500	.0005–.0025	85–95	2.873–2.874	.0015–.0035	135
MF-406 Gas.	.003	1.1092	.013	.013	2.248–2.249	.0008–.0029	75–85	2.624–2.625	.0005–.0032	90
MF-406 Diesel	.004	1.1092	.013	.010	2.248–2.249	.0008–.0029	75–85	2.624–2.625	.0005–.0032	90
MH-444 Gas.	.003	1.2499	.013	.013	2.498–2.500	.0005–.0025	85–95	2.873–2.874	.0015–.0035	105
MH-444 Diesel	.004	1.2499	.007	.007	2.498–2.500	.0005–.0025	85–95	2.873–2.874	.0015–.0035	135
MH-555 Gas.	.003	1.4999	.011	.014	2.7485–2.7495	.0008–.0028	105	3.249–3.250	.0005–.0027	...
MH-555 Diesel	.005	1.4999	.011	.014	2.7485–2.7495	.0018–.0038	105	3.249–3.250	.0012–.004	...
MF-1001 Gas.	.003	1.1092	.013	.013	2.248–2.249	.0008–.0029	75–85	2.624–2.625	.0005–.0032	90
MF-1001 Diesel	.004	1.1092	.013	.010	2.248–2.249	.0008–.0029	75–85	2.624–2.625	.0005–.0032	90

①—Front and rear bearing housing to block 18–20 ft. lbs., center bearing housing to block 39–42 ft. lbs., upper to lower bearing housing 25–30 ft. lbs.

MINNEAPOLIS-MOLINE

TUNE UP SPECIFICATIONS

Tractor Model	Firing Order	Spark Plug Gap	Breaker Gap		Ignition Mark			Valve Lash		Cylinder Head Torque
			Distributor	Magneto	Location	Retarded Timing BTC	Full Advance Timing BTC	Intake	Exhaust	
UB Gasoline	1342	.024	.022	...	Flywheel	...	3⅞″(4)	.008H	.010H	(7)
UB Distillate	1342	.028	.022	...	Flywheel	...	4⅛″(4)	.008H	.010H	(7)
UB LP-Gas	1342	.024	.022	...	Flywheel	...	4⅛″(4)	.008H	.010H	(7)
UB Diesel	1342	...	...	...	Flywheel	27°	...	.008H	.010H	(9)
UTS Gasoline	1342	.024	.022	...	Flywheel	...	3⅞″(4)	.008H	.010H	(7)
UTS Distillate	1342	.028	.022	...	Flywheel	...	4⅛″(4)	.008H	.010H	(7)
UTS LP-Gas	1342	.024	.022	...	Flywheel	...	4⅛″(4)	.008H	.010H	(7)
UTS Diesel	1342	...	...	...	Flywheel	27°	...	.008H	.010H	(9)
Jet Star Gasoline	1342	.024	.022	...	Flywheel	3°	28°	.008H	.010H	75-80(3)
Jet Star LP-Gas	1342	.015	.022	...	Flywheel	3°	28°	.008H	.010H	75-80(3)
Jet Star Diesel	1342	...	...	...	Flywheel	...	27°(11)	.008H	.010H	75-80(3)
4 Star Gasoline	1342	.024	.022	...	Flywheel	3°	28°	.008H	.010H	75-80(3)
4 Star LP-Gas	1342	.015	.022	...	Flywheel	3°	28°	.008H	.010H	75-80(3)
4 Star Diesel	1342	...	..	...	Flywheel	...	27°(11)	.008H	.010H	75-80(3)
4 Star Super Gaso	1342	.024	.022	...	Flywheel	3°	28°	.008H	.010H	75-80(3)
4 Star Super LP-Gas	1342	.015	.022	...	Flywheel	3°	28°	.008H	.010H	75-80(3)
4 Star Super Diesel	1342	...	...	...	Flywheel	...	27°(11)	.008H	.010H	75-80(3)
5 Star Gasoline	1342	.024	.022	...	Flywheel	...	3⅛″(4)	.008H	.010H	(8)
5 Star LP-Gas	1342	.024	.022	...	Flywheel	...	2⅞″(4)	.008H	.010H	(8)
5 Star Diesel	1342	...	...	...	Flywheel	29°	...	.008H	.010H	(10)
M5 Gasoline	1342	.024	.020	...	Flywheel	...	3⅛″(4)	.008H	.010H	(8)
M5 LP-Gas	1342	.015	.020	...	Flywheel	...	2⅞″(4)	.008H	.010H	(8)
M5 Diesel	1342	...	...	...	Flywheel	(5)	...	.008H	.010H	(10)
G-VI LP-Gas	153624	.015	.022	...	Flywheel	...	4 1/16″(4)	.008H	.010H	(8)
G-VI Diesel	153624	...	...	...	Flywheel	(6)	...	.008H	.010H	(10)
335 Gasoline	1342	.024	.021	...	Flywheel	...	2 15/16″	.008H	.010H	75(3)
335 LP-Gas	1342	.621	.021	...	Flywheel	...	3 1/16″(4)	.008H	.010H	75(3)
445 Gasoline	1342	.024	.021	...	Flywheel	DC-1	3 1/16″(4)	.008H	.010H	75(3)
445 Distillate	1342	.026	.021	...	Flywheel	(2)	3 7/16″(4)	.008H	.010H	75(3)
445 LP-Gas	1342	.021	.021	...	Flywheel	(2)	3 7/16″(4)	.008H	.010H	75(3)

(1)—1° before DC-1 mark.
(2)—3° before DC-1 mark.
(3)—With cold engine.
(4)—Before DC-1 or DC-1-4 mark.
(5)—APE pump 40° BTC, PSB pump 30° BTC.
(6)—APE pump 42° BTC, PSB pump 30° BTC.
(7)—Camshaft side 100-105, exhaust manifold side 85-90.
(8)—Camshaft side 125-130, exhaust manifold side 105-110.
(9)—5/8″ studs on camshaft side 100-105, 85-90 on exhaust manifold side. 9/16″ studs 70.
(10)—5/8″ studs on camshaft side 125-130, 105-110 on exhaust manifold side. 9/16″ studs 85-90.
(11)—Injection timing.

PISTONS, PINS, RINGS & CRANKSHAFT

Tractor Model	Piston Clearance	Pin Diam.	Ring End Gap Minimum		Rod Bearings			Main Bearings		
			Comp.	Oil	Crankpin Diameter	Bearing Clearance	Rod Bolt Torque	Journal Diameter	Bearing Clearance	Cap Bolt Torque
UB, UTS Gas.	.0045	1.2499	.020	.020	2.5770-2.5775	.0015-.0024	80-85	2.9110-2.9120	.0014-.0044	(1)
UB, UTS Diesel	.007	1.4999	.015	.015	2.9115-2.9120	.0024-.0039	80-85	2.9110-2.9120	.0014-.0044	(2)
Jet Star Non-Diesel	.003	.9995	.010	.010	2.625	.0015-.003	70-75	(4)	(5)	60-65
Jet Star Diesel	.005	1.2500	.010	.010	2.625	.0015-.003	70-75	(4)	(5)	(6)
4 Star Non-Diesel	.003	.9995	.010	.010	2.625	.0015-.003	70-75	(4)	(5)	60-65
4 Star Diesel	.005	1.2500	.010	.010	2.625	.0015-.003	70-75	(4)	(5)	(6)
5 Star Gas.	.005	1.2499	.020	.020	2.5770-2.5775	.0009-.003	80-85	2.9110-2.9120	.0014-.0044	(1)
5 Star Diesel	.008	1.4999	.013	.013	2.9115-2.9120	.0009-.003	80-85	2.9110-2.9120	.0014-.0044	(2)

PISTONS, PINS, RINGS & CRANKSHAFT continued

Tractor Model	Piston Clearance	Pin Diam.	Ring End Gap Minimum		Rod Bearings			Main Bearings		
			Comp.	Oil	Crankpin Diameter	Bearing Clearance	Rod Bolt Torque	Journal Diameter	Bearing Clearance	Cap Bolt Torque
M5 Gas.	.005	1.2499	.013	.013	2.9110–2.9120	.0009–.003	80–85	2.9110–2.9120	.0014–.0044	①
M5 Diesel	.008	1.4999	.013	.013	2.9115–2.9120	.0009–.003	80–85	2.9110–2.9120	.0014–.0044	②
G-VI Gas.	.0045	1.2499	.020	.020	2.5770–2.5775	.0009–.003	80–85	2.9110–2.9120	.0014–.0044	①
G-VI Diesel	.007	1.4999	.015	.015	2.9115–2.9120	.0009–.003	80–85	2.9110–2.9120	.0014–.0044	②
335 Gas.	③	.9994	.010	.010	2.6245–2.6250	.0011–.0027	70–75	④	.0015–.0036	60–65
335 Diesel	③	.9994	.010	.010	2.6245–2.6250	.0011–.0027	70–75	④	.0015–.0036	60–65
445 Gas.	.0035	.9994	.010	.010	2.6245–2.6250	.0011–.0031	70–75	④	⑤	60–65
445 Diesel	.0035	.9994	.010	.010	2.6245–2.6250	.0011–.0031	70–75	④	⑤	60–65

①—Front 140, others 100–105.
②—Front 200, others 100–105.
③—Iron pistons .0035″, aluminum, .004.
④—Rear 2.9995–3.0000, others 2.7495–2.7500.
⑤—Rear .0015–.0035, others .0015–.004.
⑥—Rear bearing 60–65 ft-lbs , others 90–100.

TUNE UP SPECIFICATIONS OLIVER

Tractor Model	Firing Order	Spark Plug Gap	Breaker Gap		Ignition Mark			Valve Lash		Cylinder Head Torque
			Distributor	Magneto	Location	Retarded Timing BTC	Full Advance Timing BTC	Intake	Exhaust	
Super 44	1342	.025	.020	...	Flywheel	TDC	IGN	.014H	.014H	70–75
Super 55 HC	1243	.025	.022	...	Flywheel	TDC	IGN-HC	.009C	.015C	96
Super 55D	1243	...	...	...	Flywheel	FP	...	.009C	.019C	115
66 HC	1243	.025	.022	.015	Flywheel	TDC	IGN-HC	.009C	.016C	96
66 KD	1243	.025	.022	.015	Flywheel	5°	IGN-KD	.009C	.016C	96
66D	1243	...	...	...	Flywheel	FP	...	.009C	.016C	115①
Super 66 HC	1243	.025	.022	...	Flywheel	TDC	IGN-HC	.010C	.016C	96
Super 66D	1243	...	...	...	Flywheel	FP	...	.010C	.020C	115①
77LPG, 77HC	153624	.025	.022	.015	Flywheel	TDC	IGN-HC	.009C	.016C	96
77 KD	153624	.025	.022	.015	Flywheel	5°	IGN-KD	.009C	.016C	96
77D	153624	...	...	...	Flywheel	FP	...	.009C	.016C	115①
Super 77 HC	153624	.025	.022	...	Flywheel	TDC	IGN-HC	.010C	.016C	96
Super 77 D	153624	...	...	...	Flywheel	FP	...	.010C	.020C	115①
88 HC	153624	.025	.022	.015	Flywheel	TDC	IGN-HC	.009C	.016C	96
88 LPG	153624	.025	.022	.015	Flywheel	TDC	IGN-HC	.009C	.016C	96
88 KD	153624	.025	.022	.015	Flywheel	5°	IGN-KD	.009C	.016C	96
88 D	153624	...	...	...	Flywheel	FP	...	.009C	.016C	115①
Super 88 HC	153624	.025	.022	...	Flywheel	TDC	IGN-HC	.010C	.016C	96
Super 88 D	153624	...	...	...	Flywheel	FP	...	.010C	.020C	115①
Super 99	132	...	...	...	Flywheel			...	.009H	170
440	1342	.025	.020	...	Flywheel	TDC	IGN	.014H	.014H	70–75
550HC	1243	.025	.022	...	Flywheel	TDC	IGN-HC	.009C	.015C	96
550D	1243	...	...	...	Flywheel	FP	...	.009C	.019C	115①
660 HC	1243	.025	.022	...	Flywheel	TDC	IGN-HC	.010C	.016C	96
660D	1243	...	...	...	Flywheel	FP	...	.010C	.020C	115①
770 HC	153624	.025	...	...	Flywheel	TDC	IGN-HC	.010C	.016C	96
770D	153624	...	...	...	Flywheel	FP	...	.010C	.020C	115①
880 HC	153624	.025	.022	...	Flywheel	TDC	IGN-HC	.010C	.016C	96
880 D	153624	...	...	...	Flywheel	FP	...	.010C	.020C	115①
950 HC	153624	.025	.022	...	Flywheel	4½°	IGN	.009C	.016C	100
950 D	153624	...	...	...	Flywheel			.009C	.016C	115
990	132	...	...	...	Flywheel			...	.009H	170
995	132	...	...	...	Flywheel			...	.009H	170
1800 Gasoline	153624	.025	.022	...	Flywheel	"O"	22°	.014H	.023H	130
1800 LP-Gas	153624	.025	.022	...	Flywheel	4°	26°	.014H	.023H	130
1800 Diesel	153624	...	...	...	Flywheel	8°	...	.010H	.016H	130
1900 Diesel	1342	...	...	...	...	...	...	...	.009H	175

①—Drilled screw 96–100.

PISTONS, PINS, RINGS & CRANKSHAFT

Tractor Model	Piston Clearance	Pin Diam.	Ring End Gap Minimum		Rod Bearings			Main Bearings		
			Comp.	Oil	Crankpin Diameter	Bearing Clearance	Rod Bolt Torque	Journal Diameter	Bearing Clearance	Cap Bolt Torque
Super 44	.003	.8592	.007	.008	1.9365-1.9375	.0002-.0022	45-50	2.249-2.250	.0002-.0024	105
Super 55 HC	.002	1.2495	.010	.010	2.249-2.250	.0005-.0015	46-50	2.249-2.250	.0005-.0035	90
Super 55 D	.002	1.2495	.010	.010	2.249-2.250	.0005-.0015	46-50	2.249-2.250	.0005-.0035	90
66 HC, 66 KD	.002	1.2495	.012	.010	1.999-2.000	.0005-.0015	46-50	2.249-2.250	.0005-.0035	90
66 D	.002	1.2495	.012	.010	1.999-2.000	.0005-.0015	46-50	2.249-2.250	.0005-.0035	90
Super 66 HC	.002	1.2495	.012	.010	2.249-2.250	.0005-.0015	46-50	2.249-2.250	.0005-.0035	90
Super 66 D	.002	1.2495	.012	.010	2.249-2.250	.0005-.0015	46-50	2.249-2.250	.0005-.0035	90
77 Gas.	.002	1.2495	.012	.010	1.999-2.000	.0005-.0015	46-50	2.249-2.250	.0005-.0035	90
77 Diesel	.002	1.2495	.012	.010	1.999-2.000	.0005-.0015	46-50	2.249-2.250	.0005-.0035	90
Super 77 HC	.002	1.2495	.012	.010	2.249-2.250	.0005-.0015	46-50	2.249-2.250	.0005-.0035	90
Super 77 D	.002	1.2495	.012	.010	2.249-2.250	.0005-.0015	46-50	2.249-2.250	.0005-.0035	90
88 Gas.	.002	1.2495	.012	.010	2.249-2.250	.0005-.0015	46-50	2.624-2.625	.0005-.0035	90
88 Diesel	.002	1.2495	.012	.010	2.249-2.250	.0005-.0015	46-50	2.624-2.625	.0005-.0035	90
Super 88 HC	.002	1.2495	.012	.010	2.437-2.438	.0005-.0015	56-58	2.624-2.625	.0005-.0035	110
Super 88 D	.002	1.2495	.012	.010	2.437-2.438	.0005-.0015	56-58	2.624-2.625	.0005-.0035	110
Super 99	.006	1.500	.015	.013	2.749-2.750	.0015-.003	70	3.499-3.500	.0015-.003	185
440	.003	.8592	.007	.008	1.9365-1.9375	.0002-.0022	45-50	2.249-2.250	.0002-.0024	105
550 HC	.002	1.2495	.010	.010	2.249-2.250	.0005-.0015	46-50	2.249-2.250	.0005-.0035	90
550 D	.002	1.2495	.010	.010	2.249-2.250	.0005-.0015	46-50	2.249-2.250	.0005-.0035	90
660 HC	.002	1.2495	.012	.010	2.249-2.250	.0005-.0015	46-50	2.249-2.250	.0005-.0035	90
660 D	.002	1.2495	.012	.010	2.249-2.250	.0005-.0015	46-50	2.249-2.250	.0005-.0035	90
770 HC	.002	1.2495	.012	.010	2.249-2.250	.0005-.0015	46-50	2.249-2.250	.0005-.0035	90
770 D	.002	1.2495	.012	.010	2.249-2.250	.0005-.0015	46-50	2.249-2.250	.0005-.0035	90
880 HC	.002	1.2495	.012	.010	2.437-2.438	.0005-.0015	56-58	2.624-2.625	.0005-.0035	110
880 D	.002	1.2495	.012	.010	2.437-2.438	.0005-.0015	56-58	2.624-2.625	.0005-.0035	110
950 HC	.003	1.250	.015	.013	2.249-2.250	.0005-.0015	90	2.624-2.625	.0005-.003	110
950 D	.003	1.250	.015	.013	2.249-2.250	.0005-.0015	90	2.624-2.625	.0005-.003	110
990	.006	1.500	.015	.013	2.749-2.750	.0015-.003	70	3.499-3.500	.0015-.003	185
995	.006	1.500	.015	.013	2.749-2.750	.0015-.003	70	3.499-3.500	.0015-.003	185
1800 Non-Diesel	.0025	1.249	.010	.010	2.436-2.437		56-60	2.624-2.625	.0015-.0045	130
1800 Diesel	.004	1.249	.010	.010	2.436-2.437		56-60	2.624-2.625	.0015-.0045	130
1900 Diesel	.007	1.3748	.020	.010	2.499-2.500		40-45	2.999-3.000	.0013-.0042	125

NOTES

NOTES

NOTES

NOTES